# SM2A18DSK

**Dual N-Channel Enhancement Mode MOSFET**

## Features

- 200V/0.9A,
  $R_{DS(ON)}$= 1140mΩ(max.) @ $V_{GS}$= 10V
  $R_{DS(ON)}$= 1300mΩ(max.) @ $V_{GS}$= 4.5V
- ESD protected
- 100% UIS + $R_g$ Tested
- Reliable and Rugged
- Lead Free and Green Devices Available (RoHS Compliant)

## Pin Description

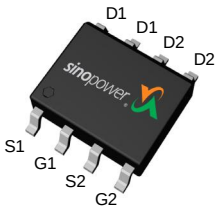


Top View of SOP-8

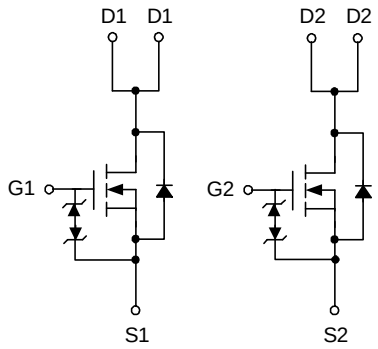


N-Channel MOSFET

## Applications

- Power Management in DC/DC Converter.

## Ordering and Marking Information

| | |
|---|---|
| SM2A18DS □□-□□ □<br>Assembly Material<br>Handling Code<br>Temperature Range<br>Package Code | Package Code<br>K : SOP-8<br>Operating Junction Temperature Range<br>C : -55 to 150 °C<br>Handling Code<br>TR : Tape & Reel<br>Assembly Material<br>G : Halogen and Lead Free Device |
| SM2A18DS K : 2A18DS XXXXX | XXXXX - Lot Code |

Note : SINOPOWER lead-free products contain molding compounds/die attach materials and 100% matte tin plate termination finish; which are fully compliant with RoHS. SINOPOWER lead-free products meet or exceed the lead-free requirements of IPC/JEDEC J-STD-020D for MSL classification at lead-free peak reflow temperature. SINOPOWER defines "Green" to mean lead-free (RoHS compliant) and halogen free (Br or Cl does not exceed 900ppm by weight in homogeneous material and total of Br and Cl does not exceed 1500ppm by weight).

**SINOPOWER reserves the right to make changes to improve reliability or manufacturability without notice, and advise customers to obtain the latest version of relevant information to verify before placing orders.**

## Absolute Maximum Ratings ($T_A$ = 25°C Unless Otherwise Noted)

| Symbol | Parameter | | Rating | Unit |
|---|---|---|---|---|
| **Common Ratings** | | | | |
| $V_{DSS}$ | Drain-Source Voltage | | 200 | V |
| $V_{GSS}$ | Gate-Source Voltage | | ±20 | |
| $T_J$ | Maximum Junction Temperature | | 150 | °C |
| $T_{STG}$ | Storage Temperature Range | | -55 to 150 | |
| $I_S$ | Diode Continuous Forward Current | $T_A$=25°C | 0.9 | A |
| $I_D$ | Continuous Drain Current | $T_A$=25°C | 0.9 | A |
| | | $T_A$=70°C | 0.7 | |
| $I_{DM}$ [a] | Pulsed Drain Current | $T_A$=25°C | 3.6 | A |
| $P_D$ | Maximum Power Dissipation | $T_A$=25°C | 2.27 | W |
| | | $T_A$=70°C | 1.45 | |
| $R_{\theta JA}$ [b] | Thermal Resistance-Junction to Ambient | t ≤ 10s | 55 | °C/W |
| | | Steady State | 95 | °C/W |
| $I_{AS}$ [c] | Avalanche Current, Single pulse | L=0.5mH | 1 | A |
| $E_{AS}$ [c] | Avalanche Energy, Single pulse | L=0.5mH | 0.25 | mJ |

Note a：Pulse width limited by maximum junction temperature.
Note b：Surface mounted on 1in$^2$ pad area.
Note c：UIS tested and pulse width limited by maximum junction temperature 150$^o$C (initial temperature $T_j$=25$^o$C).

## Electrical Characteristics ($T_A$ = 25°C Unless Otherwise Noted)

| Symbol | Parameter | Test Conditions | Min. | Typ. | Max. | Unit |
|---|---|---|---|---|---|---|
| **Static Characteristics** | | | | | | |
| $BV_{DSS}$ | Drain-Source Breakdown Voltage | $V_{GS}$=0V, $I_{DS}$=250μA | 200 | - | - | V |
| $I_{DSS}$ | Zero Gate Voltage Drain Current | $V_{DS}$=160V, $V_{GS}$=0V | - | - | 1 | μA |
| | | $T_J$=85°C | - | - | 30 | |
| $V_{GS(th)}$ | Gate Threshold Voltage | $V_{DS}$=$V_{GS}$, $I_{DS}$=250μA | 1 | 2 | 3 | V |
| $I_{GSS}$ | Gate Leakage Current | $V_{GS}$=±20V, $V_{DS}$=0V | - | - | ±10 | μA |
| $R_{DS(ON)}$ [d] | Drain-Source On-state Resistance | $V_{GS}$=10V, $I_{DS}$=0.5A | - | 950 | 1140 | mΩ |
| | | $V_{GS}$=4.5V, $I_{DS}$=0.5A | - | 1000 | 1300 | mΩ |
| **Diode Characteristics** | | | | | | |
| $V_{SD}$ [d] | Diode Forward Voltage | $I_{SD}$=1A, $V_{GS}$=0V | - | 0.8 | 1.3 | V |
| $t_{rr}$ | Reverse Recovery Time | $I_{SD}$=1A, $dI_{SD}/dt$=100A/μs | - | 51 | - | ns |
| $Q_{rr}$ | Reverse Recovery Charge | | - | 54 | - | nC |
| **Dynamic Characteristics** [e] | | | | | | |
| $R_G$ | Gate Resistance | $V_{GS}$=0V,$V_{DS}$=0V,f=1MHz | - | 3.7 | - | Ω |
| $C_{iss}$ | Input Capacitance | $V_{GS}$=0V, $V_{DS}$=30V, Frequency=1.0MHz | - | 250 | 325 | pF |
| $C_{oss}$ | Output Capacitance | | - | 16 | - | |
| $C_{rss}$ | Reverse Transfer Capacitance | | - | 4 | - | |
| $t_{d(ON)}$ | Turn-on Delay Time | $V_{DD}$=30V, $R_L$=30Ω, $I_{DS}$=1A, $V_{GEN}$=10V, $R_G$=6Ω | - | 8 | 15 | ns |
| $t_r$ | Turn-on Rise Time | | - | 6 | 11 | |
| $t_{d(OFF)}$ | Turn-off Delay Time | | - | 13 | 24 | |
| $t_f$ | Turn-off Fall Time | | - | 8 | 15 | |
| **Gate Charge Characteristics** [e] | | | | | | |
| $Q_g$ | Total Gate Charge | $V_{DS}$=100V, $V_{GS}$=4.5V, $I_{DS}$=1A | - | 2.5 | - | nC |
| $Q_g$ | Total Gate Charge | $V_{DS}$=100V, $V_{GS}$=10V, $I_{DS}$=1A | - | 5.3 | 7.5 | |
| $Q_{gs}$ | Gate-Source Charge | | - | 1.1 | - | |
| $Q_{gd}$ | Gate-Drain Charge | | - | 0.7 | - | |

Note d：Pulse test ; pulse width≤300μs, duty cycle≤2%.

Note e：Guaranteed by design, not subject to production testing.

Copyright © Sinopower Semiconductor, Inc.

## Typical Operating Characteristics

**Power Dissipation**

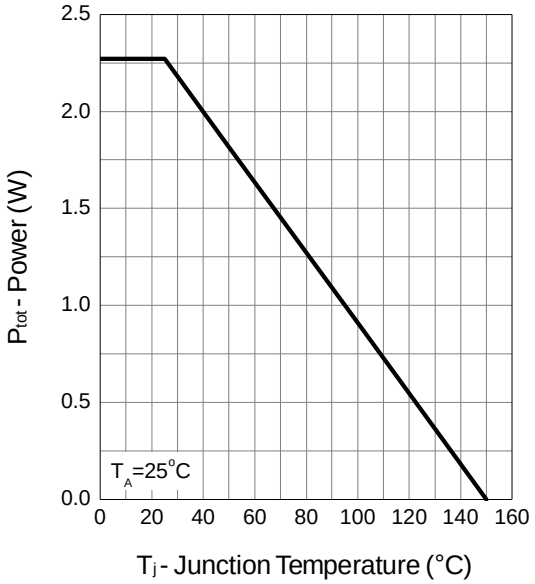


**Drain Current**

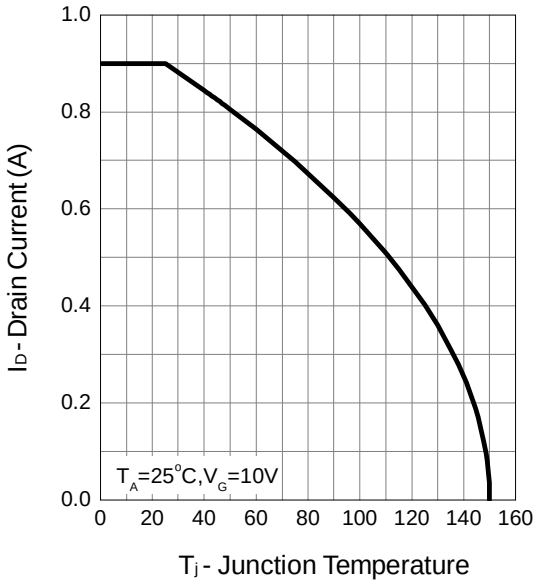


**Safe Operation Area**

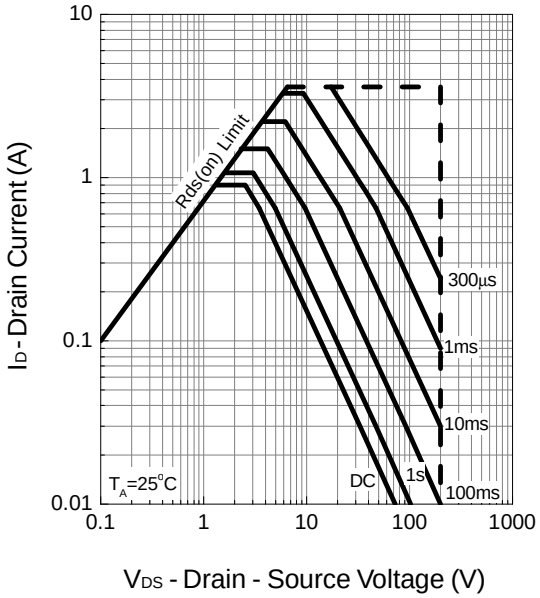


**Thermal Transient Impedance**

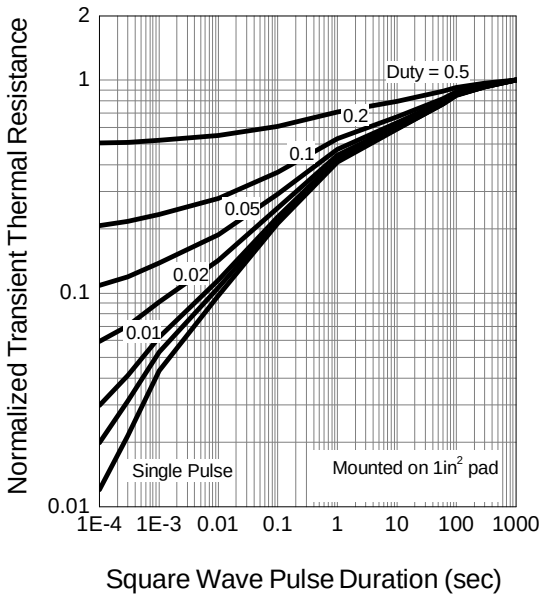

## Typical Operating Characteristics (Cont.)

**Output Characteristics**

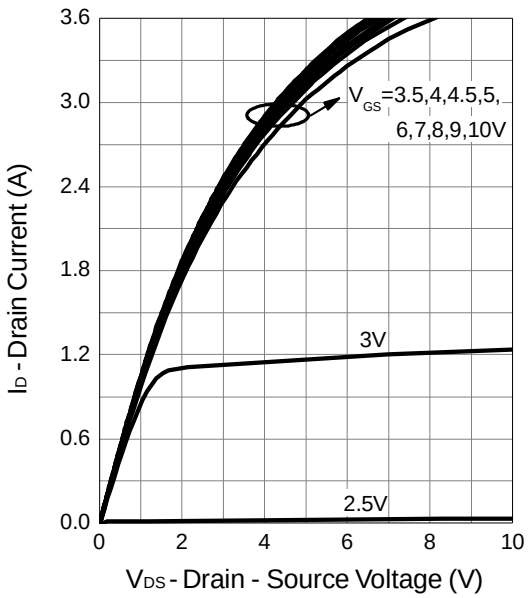


**Drain-Source On Resistance**

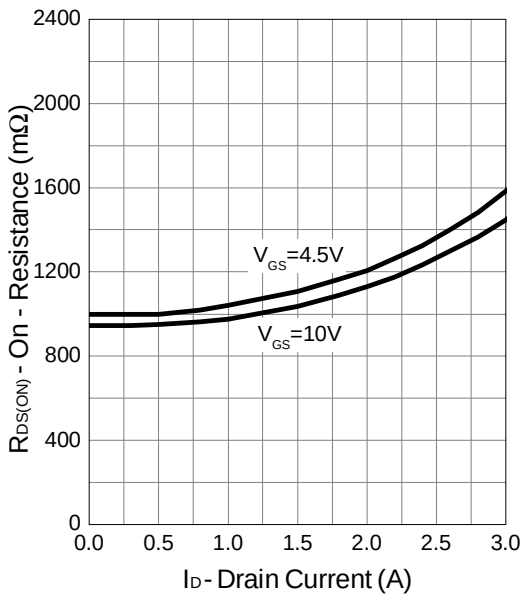


**Gate-Source On Resistance**

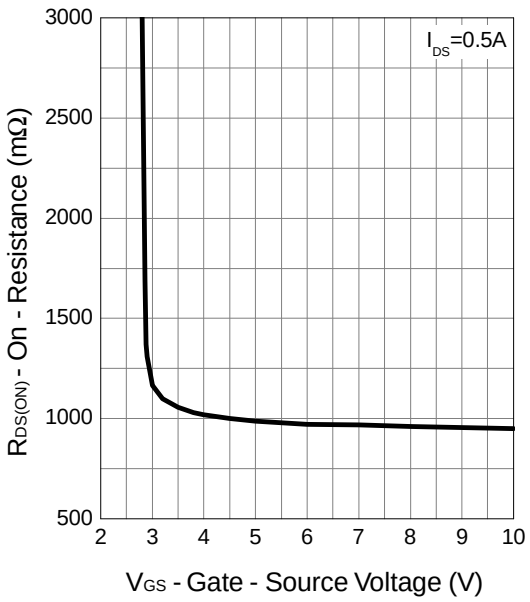


**Gate Threshold Voltage**

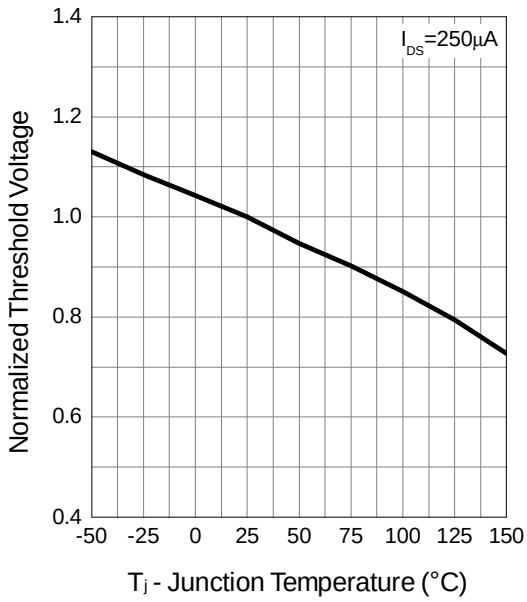

## Typical Operating Characteristics (Cont.)

**Drain-Source On Resistance**

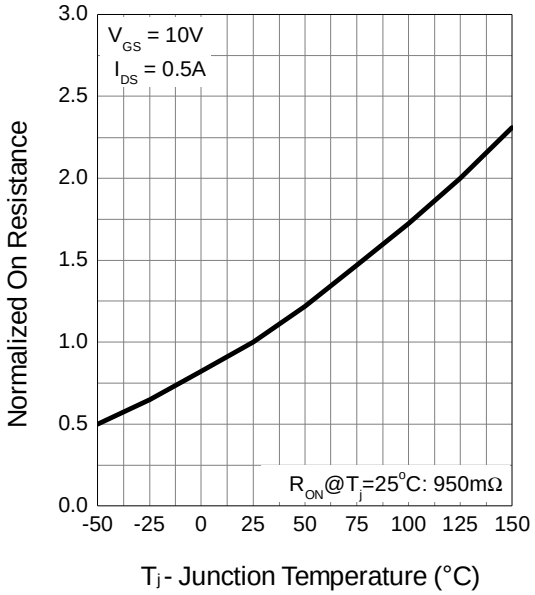


**Source-Drain Diode Forward**

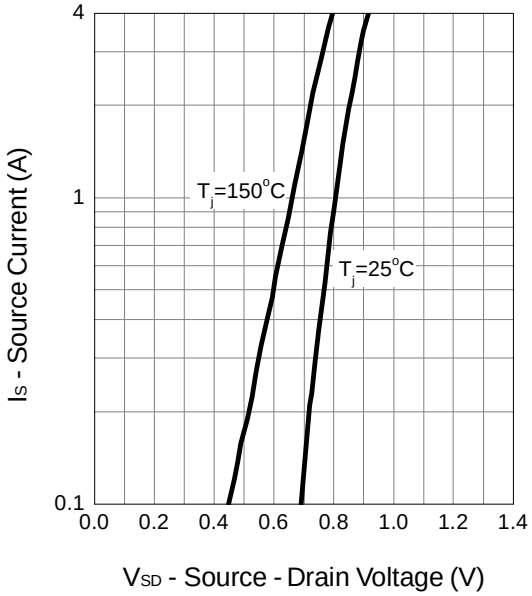


**Capacitance**

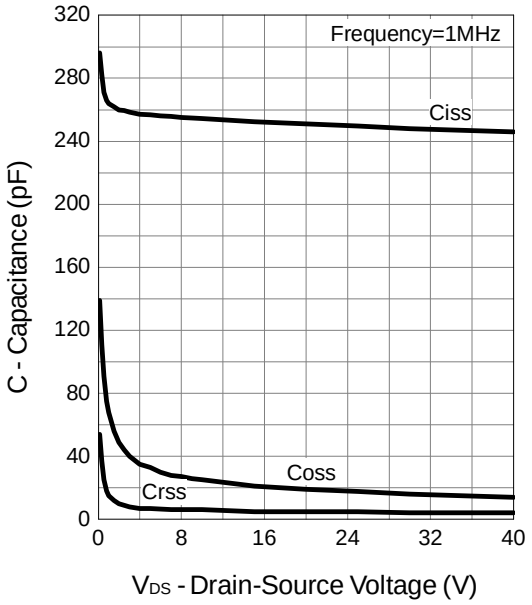


**Gate Charge**

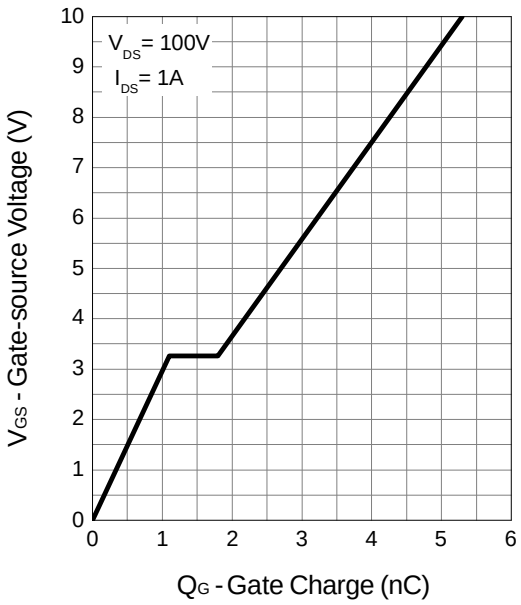

## Avalanche Test Circuit and Waveforms

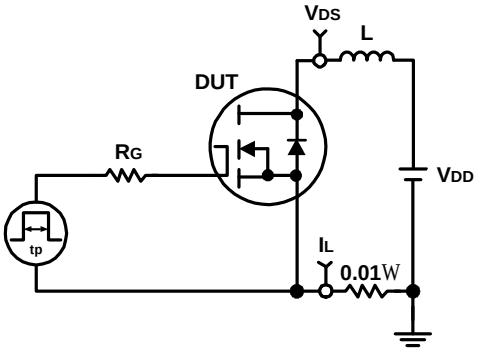


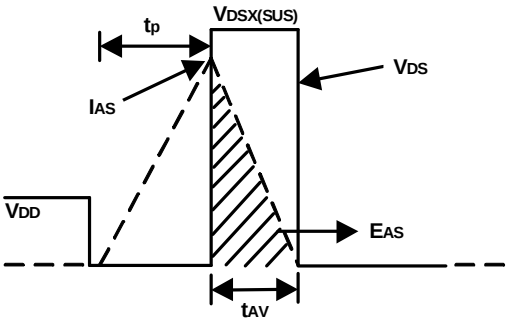


## Switching Time Test Circuit and Waveforms

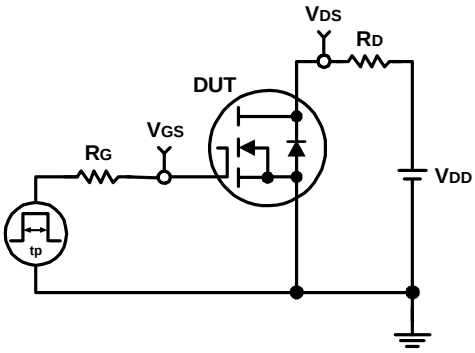


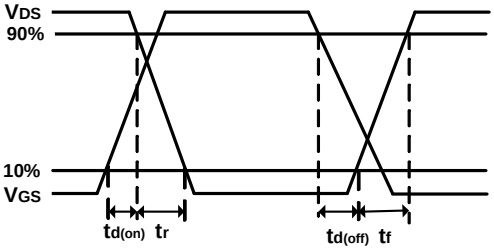

## Disclaimer

Sinopower Semiconductor, Inc. (hereinafter “Sinopower”) has been making great efforts to development high quality and better performance products to satisfy all customers’ needs. However, a product may fail to meet customer’s expectation or malfunction for various situations.

All information which is shown in the datasheet is based on Sinopower’s research and development result, therefore, Sinopower shall reserve the right to adjust the content and monitor the production.

In order to unify the quality and performance, Sinopower has been following JEDEC while defines assembly rule. Notwithstanding all the suppliers basically follow the rule for each product, different processes may cause slightly different results.

The technical information specified herein is intended only to show the typical functions of and examples of application circuits for the products. Sinopower does not grant customers explicitly or implicitly, any license to use or exercise intellectual property or other rights held by Sinopower and other parties. Sinopower shall bear no responsible whatsoever for any dispute arising from the use of such technical information.

The products are not designed or manufactured to be used with any equipment, device or system which requires an extremely high level of reliability, such as the failure or malfunction of which any may result in a direct threat to human life or a risk of human injury. Sinopower shall bear no responsibility in any way for use of any of the products for the above special purposes. If a product is intended to use for any such special purpose, such as vehicle, military, or medical controller relevant applications, please contact Sinopower sales representative before purchasing.

Copyright © Sinopower Semiconductor, Inc.

## Package Information

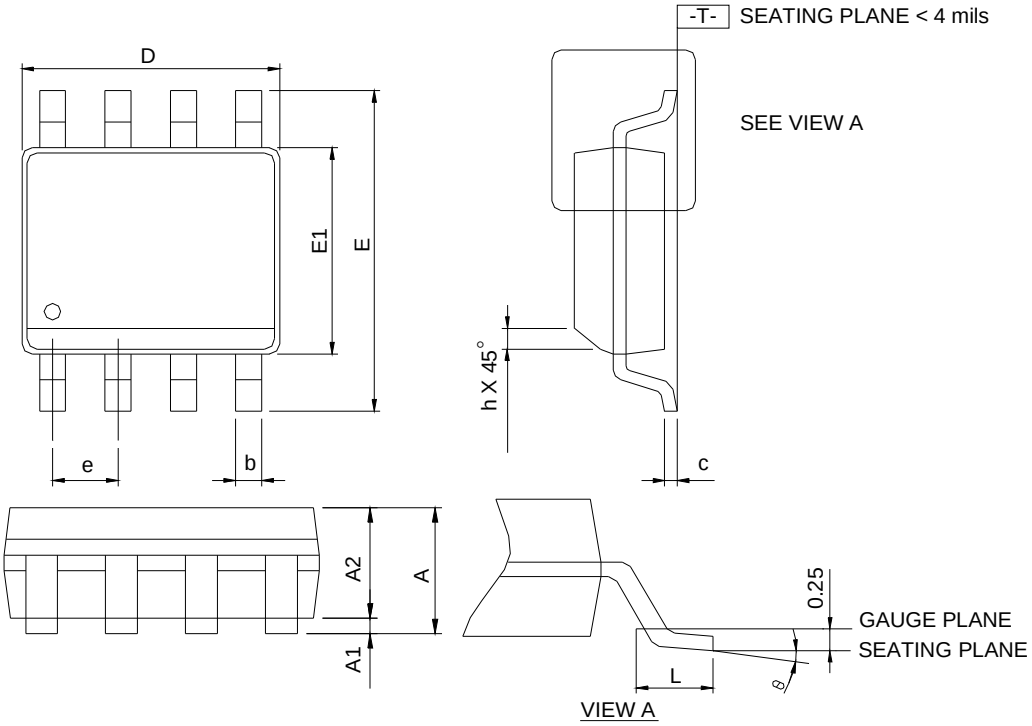


| SYMBOL | SOP-8 | | | |
|---|---|---|---|---|
| | MILLIMETERS | | INCHES | |
| | MIN. | MAX. | MIN. | MAX. |
| A | - | 1.75 | - | 0.069 |
| A1 | 0.10 | 0.25 | 0.004 | 0.010 |
| A2 | 1.25 | - | 0.049 | - |
| b | 0.31 | 0.51 | 0.012 | 0.020 |
| c | 0.17 | 0.25 | 0.007 | 0.010 |
| D | 4.80 | 5.00 | 0.189 | 0.197 |
| E | 5.80 | 6.20 | 0.228 | 0.244 |
| E1 | 3.80 | 4.00 | 0.150 | 0.157 |
| e | 1.27 BSC | | 0.050 BSC | |
| h | 0.25 | 0.50 | 0.010 | 0.020 |
| L | 0.40 | 1.27 | 0.016 | 0.050 |
| θ | 0° | 8° | 0° | 8° |

Note: 1. Follow JEDEC MS-012 AA.
2. Dimension "D" does not include mold flash, protrusions or gate burrs. Mold flash, protrusion or gate burrs shall not exceed 6 mil per side.
3. Dimension "E" does not include inter-lead flash or protrusions. Inter-lead flash and protrusions shall not exceed 10 mil per side.

**RECOMMENDED LAND PATTERN**

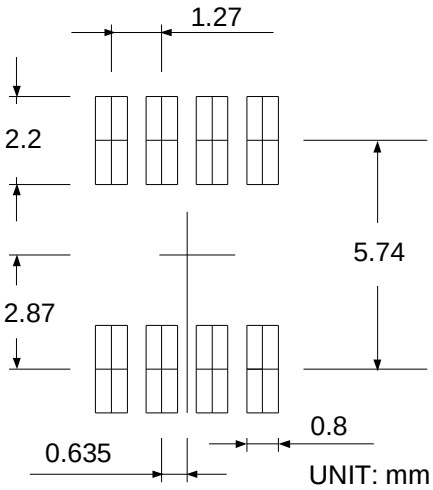

## Carrier Tape & Reel Dimensions

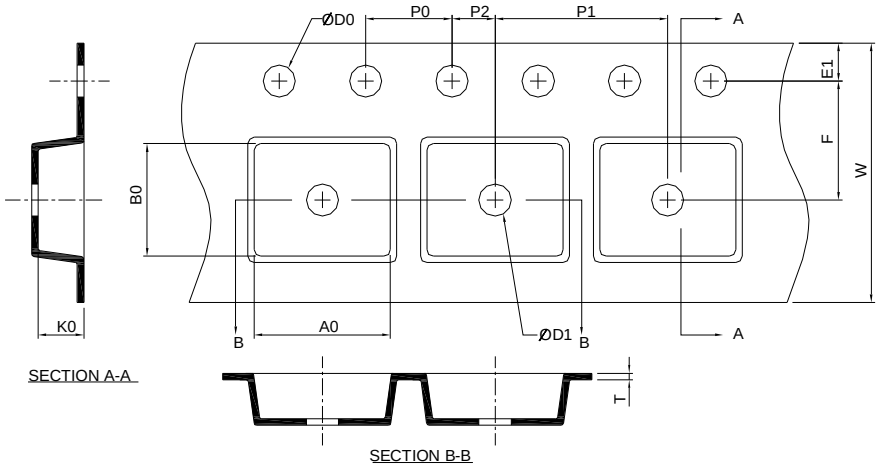


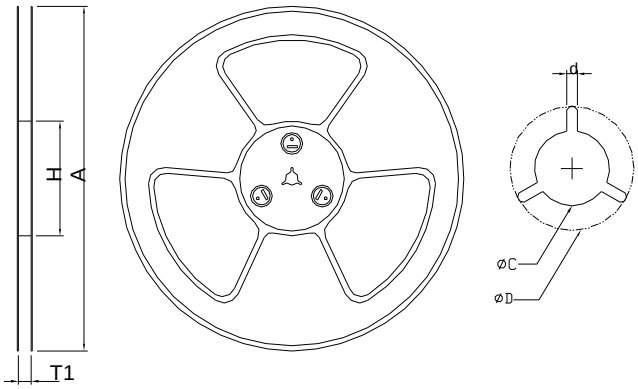


| Application | A | H | T1 | C | d | D | W | E1 | F |
|---|---|---|---|---|---|---|---|---|---|
| SOP-8 | 330.0± 2.00 | 50 MIN. | 12.4+2.00 -0.00 | 13.0+0.50 -0.20 | 1.5 MIN. | 20.2 MIN. | 12.0±0.30 | 1.75±0.10 | 5.5±0.05 |
| | **P0** | **P1** | **P2** | **D0** | **D1** | **T** | **A0** | **B0** | **K0** |
| | 4.0±0.10 | 8.0±0.10 | 2.0±0.05 | 1.5+0.10 -0.00 | 1.5 MIN. | 0.6+0.00 -0.40 | 6.40±0.20 | 5.20±0.20 | 2.10±0.20 |

(mm)

## Taping Direction Information

**SOP-8**

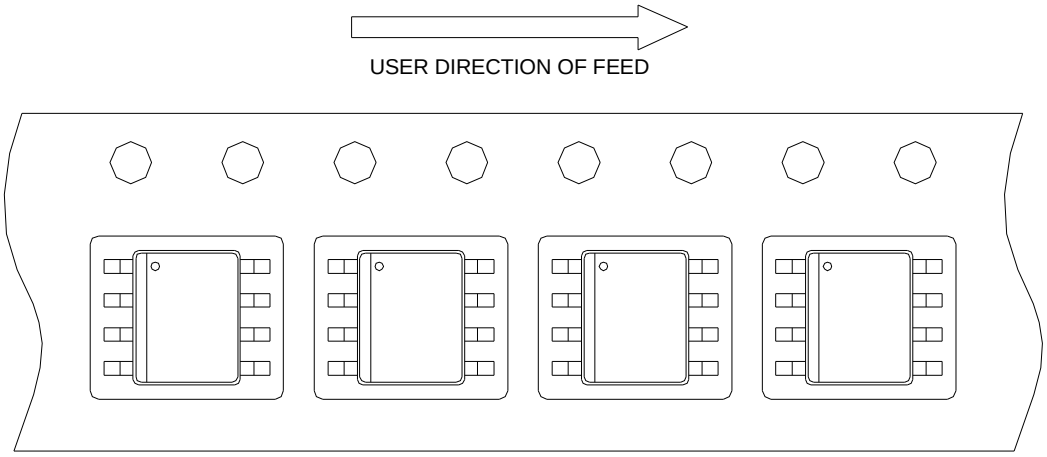


## Classification Profile

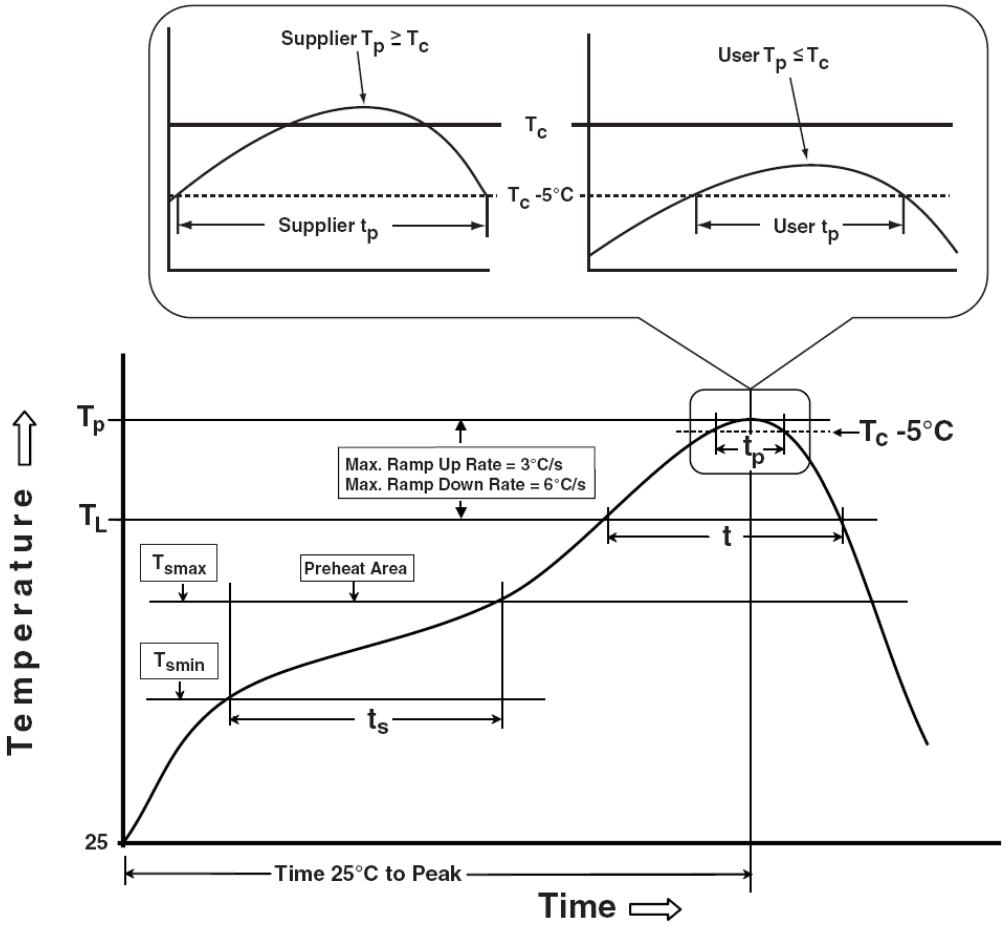

## Classification Reflow Profiles

| Profile Feature | Sn-Pb Eutectic Assembly | Pb-Free Assembly |
|---|---|---|
| **Preheat & Soak**<br>Temperature min ($T_{smin}$)<br>Temperature max ($T_{smax}$)<br>Time ($T_{smin}$ to $T_{smax}$) ($t_s$) | 100 °C<br>150 °C<br>60-120 seconds | 150 °C<br>200 °C<br>60-120 seconds |
| Average ramp-up rate ($T_{smax}$ to $T_P$) | 3 °C/second max. | 3°C/second max. |
| Liquidous temperature ($T_L$)<br>Time at liquidous ($t_L$) | 183 °C<br>60-150 seconds | 217 °C<br>60-150 seconds |
| Peak package body Temperature ($T_p$)* | See Classification Temp in table 1 | See Classification Temp in table 2 |
| Time ($t_P$)** within 5°C of the specified classification temperature ($T_c$) | 20** seconds | 30** seconds |
| Average ramp-down rate ($T_p$ to $T_{smax}$) | 6 °C/second max. | 6 °C/second max. |
| Time 25°C to peak temperature | 6 minutes max. | 8 minutes max. |
| * Tolerance for peak profile Temperature ($T_p$) is defined as a supplier minimum and a user maximum.<br>** Tolerance for time at peak profile temperature ($t_p$) is defined as a supplier minimum and a user maximum. | | |

Table 1. SnPb Eutectic Process – Classification Temperatures (Tc)

| Package Thickness | Volume $mm^3$ <350 | Volume $mm^3$ $^3$350 |
|---|---|---|
| <2.5 mm | 235 °C | 220 °C |
| ≥2.5 mm | 220 °C | 220 °C |

Table 2. Pb-free Process – Classification Temperatures (Tc)

| Package Thickness | Volume $mm^3$ <350 | Volume $mm^3$ 350-2000 | Volume $mm^3$ >2000 |
|---|---|---|---|
| <1.6 mm | 260 °C | 260 °C | 260 °C |
| 1.6 mm – 2.5 mm | 260 °C | 250 °C | 245 °C |
| ≥2.5 mm | 250 °C | 245 °C | 245 °C |

## Reliability Test Program

| Test item | Method | Description |
|---|---|---|
| SOLDERABILITY | JESD-22, B102 | 5 Sec, 245°C |
| HTRB | JESD-22, A108 | 1000 Hrs, 80% of VDS max @ Tjmax |
| HTGB | JESD-22, A108 | 1000 Hrs, 100% of VGS max @ Tjmax |
| PCT | JESD-22, A102 | 168 Hrs, 100%RH, 2atm, 121℃ |
| TCT | JESD-22, A104 | 500 Cycles, -65°C~150℃ |

## Customer Service

**Sinopower Semiconductor, Inc.**

5F, No. 6, Dusing 1St Rd., Hsinchu Science Park,

Hsinchu, 30078, Taiwan

TEL: 886-3-5635818 Fax: 886-3-5635080