MICRO SWITCH
A DIVISION OF MINNEAPOLIS-HONEYWELL REGULATOR COMPANY
FREEPORT, ILLINOIS

FED. MFR. CODE 91929

TERMINAL BLOCK-ENCLOSED

CATALOG LISTING
18PA1

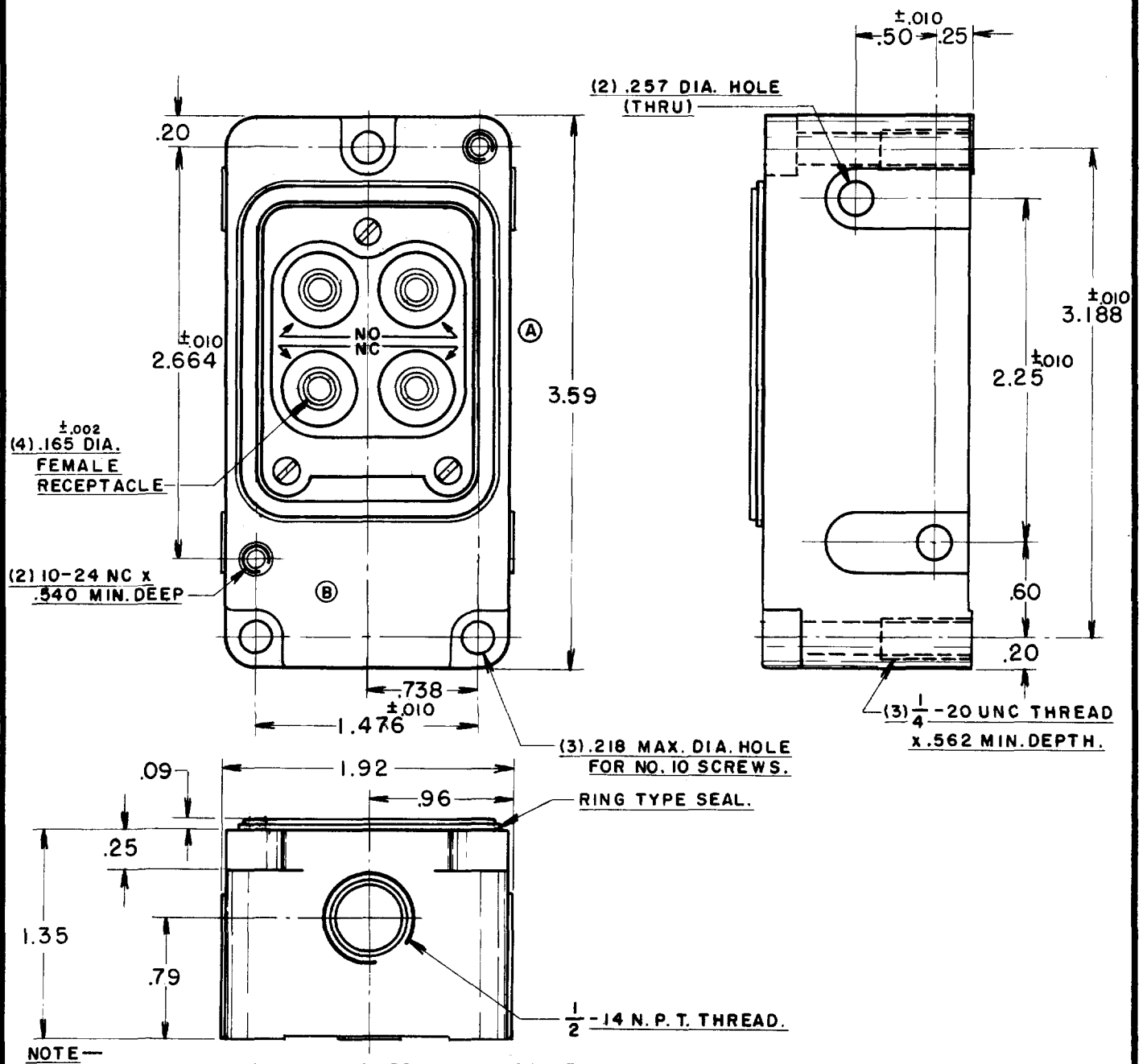

NOTE—
1— ALUMINUM HOUSING FINISHED IN BLUE PAINT.
2— TERMINAL BLOCK IS REMOVEABLE FOR WIRING. (4) 8-32 NC TERMINAL SCREWS AND WASHERS (SEMS). (4) STRAPS INCLUDED FOR TERMINATION WITH STRIPPED BARE WIRE.

THIS DRAWING COVERS A PROPRIETARY ITEM AND IS THE PROPERTY OF MICRO SWITCH. A DIVISION OF HONEYWELL. THIS DRAWING IS NOT TO BE COPIED OR USED WITHOUT THE APPROVAL OF MICRO SWITCH.

CHARACTERISTICS	ELECTRICAL DATA		SCALE FULL
	CONTACT ARRANGEMENT	BREAK DISTANCE	DO NOT SCALE PRINT
			UNLESS OTHERWISE SPECIFIED DIMENSIONS ARE IN INCHES
			TOLERANCES ARE: ONE PLACE (.0) ±.030; TWO PLACE (.00) ±.015; THREE PLACE (.000) ±.005; ANGLES ±
			WEIGHT

DRAWN	R. G. C.	10 SEPT. '57	
CHECK	GCH	17 SEP. '57	
CHECK	JWM	10 SEPT. '57	
CHECK	GEL	16 SEPT. '57	
RELEASE NO.	SR6921		
REPLACES			

DRAWING NUMBER: M 18PA1
ISSUE: 5

REVISIONS
A C080837 JAK 10 MAY 95

FORMTEK