MICRO SWITCH
FREEPORT ILLINOIS, U S A
A DIVISION OF HONEYWELL

FED MFG CODE 91929

SWITCH-TOGGLE

CATALOG LISTING
112TW1 SERIES
CHART 1

THIS DRAWING COVERS A PROPRIETARY ITEM AND IS THE PROPERTY OF MICRO SWITCH, A DIVISION OF HONEYWELL. THIS DRAWING IS NOT TO BE COPIED OR USED WITHOUT THE APPROVAL OF MICRO SWITCH.

CATALOG LISTING	CIRCUIT MADE WITH TOGGLE LEVER IN: KEYWAY SIDE 2-1 5-4	CENTER 1-2 4-5	OPPOSITE KEYWAY 2-3 5-6	ELECTRICAL DATA
112TW1 - 1	ON	OFF	ON	28 VDC & 125 VAC 5 AMP RES 2 AMP IND 1 AMP LAMP
112TW1 - 2	OFF	NONE	ON	
112TW1 - 3	ON	NONE	ON	
(H)	NONE	OFF	ON	
(G)	NONE	ON	ON	
112TW1 - 4	MOM OFF	NONE	ON	
112TW1 - 5	MOM ON	OFF	ON	
112TW1 - 6	MOM ON	NONE	OFF	
112TW1 - 7	MOM ON	OFF	MOM ON	
112TW1 - 8	MOM ON	NONE	ON	
112TW1 - 41	NONE	MOM OFF	ON	
112TW1 - 51	NONE	ON	MOM ON	
112TW1 - 61	MOM ON	OFF	NONE	

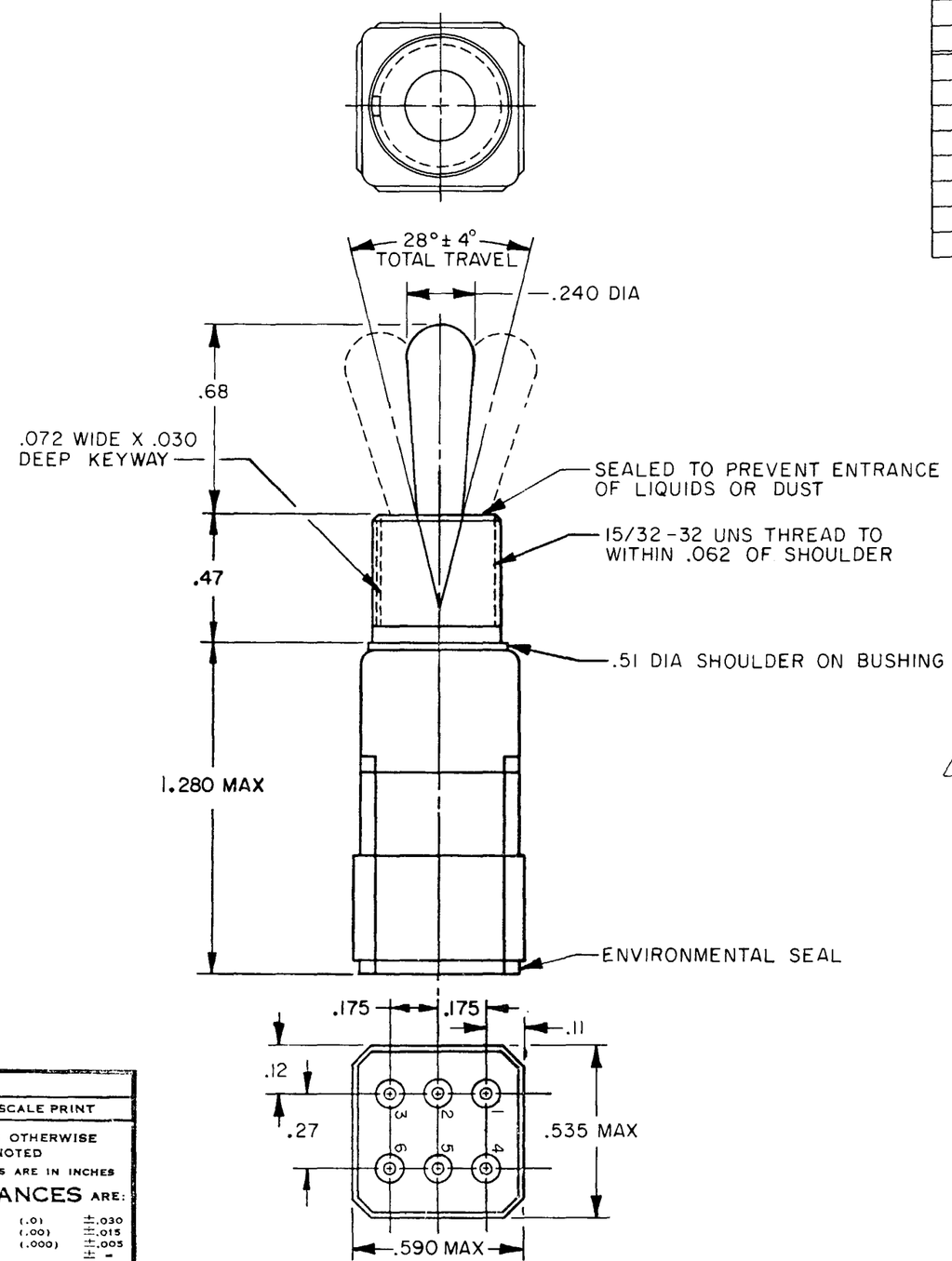

NOTES
1. FURNISHED UNASSEMBLED
2. TERMINATION WILL ACCEPT CRIMP CONTACT CONFORMING TO M39029/1-101
3. MS 35333-136 OR EQUIVALENT
4. MS 25081-C4 OR EQUIVALENT
5. MS 25082-8 GR EQUIVALENT

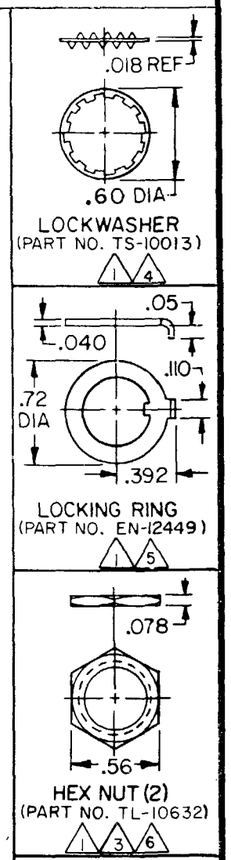

SCALE -
DO NOT SCALE PRINT
UNLESS OTHERWISE NOTED
DIMENSIONS ARE IN INCHES
TOLERANCES ARE:
ONE PLACE (.0) ±.030
TWO PLACE (.00) ±.015
THREE PLACE (.000) ±.005
ANGLES ±
WEIGHT

CATALOG LISTING
112TW1 SERIES CHART 1
PAGE 1 OF 1
ISSUE M 21
CMH 29SEP09 PR-2650
CHECK
ASD 03JUL08
CHECK
CHECK
30 APRIL 79
C E B
DRAWN
RASTER FO-5291-A

REVISIONS
G CO-93153 J J A 5 MAY 99
H CO-95308 C S L 9 NOV 99
J 0041121 KVS 03JUL08
K 0057112 VKR 29SEP09