Gate Bolt for Non Contact Switches

GB-N1

Gate Bolt

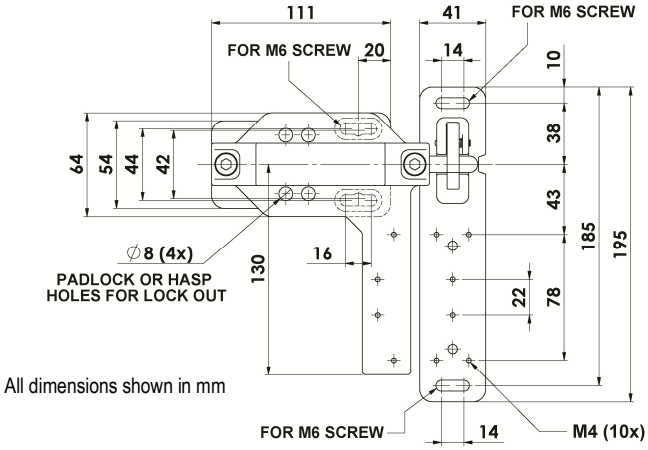

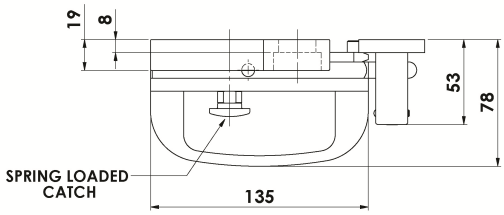

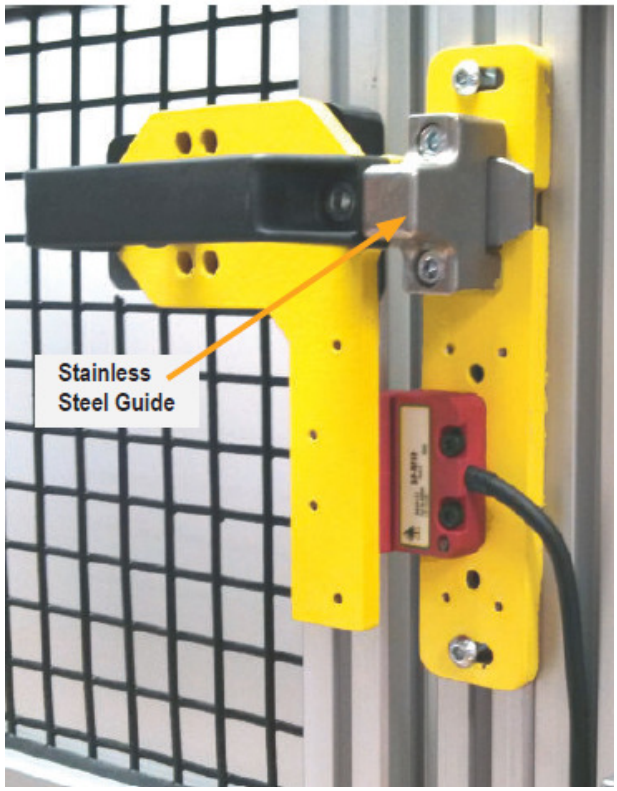

GB-N1 (Handle Position Left)

IMPORTANT NOTE:

Read and understand these instructions before installing, operating, or maintaining this equipment.

The product is designed to be a component of a customised safety orientated control system. It is the responsibility of the user to ensure the correct overall functionality of its systems and machines. IDEM, its subsidiaries and affiliates, are not in a position to guarantee all of the characteristics of a given system or product not designed by IDEM.

APPLICATION:

IDEM GB-N1 Gate Bolts allow operators to immediately open a closed guard from inside the danger area just by pushing the guard door. No tools or keys are needed to allow instant rear escape.

In conjunction with a Risk Assessment (ISO12100-1 / ISO12100-2) they can be used to eliminate the risk of operators becoming accidentally trapped inside a guarded area.

When used with an IDEM RFID Non Contact Safety Switch they provide interlocking of the guard but ensure that unintentional re-start is prevented by the need to carry out a deliberate action of sliding and then re-latching of the Gate Bolt handle.

These Gate Bolts hold the guard closed on hinged doors, ensure the maximum holding force (10,000N.) is not exceeded under normal operating conditions.

Whether opening the guard normally from the front (by using the handle) or by initiating the rear release (sliding the rear handle and pushing the guard from inside the hazard zone the Gate Bolt needs to be re-latched before the machine can be re-started.

A spring loaded stainless steel guide prevents the interlock being activated just by closing or slamming the guard door.

BENEFITS:

- Robust metal construction.
- Switches are mounted to aluminum plates to maximize read range.
- Over 30mm (1¼") adjustability (handle bracket and switch bracket mounting holes are slotted) to compensate for varying door gaps.
- Stainless steel guide prevents accidental closure, keeps safety switches properly aligned and acts as door latch.
- The stainless steel guide is spring loaded to enable instant push release from the rear of the guard but then prevents re-closing until the handle is operated and re-latched.
- Detent knob holds door in closed position with light force (to prevent accidental opening due to vibration or other unforeseen actions) and when opened, knob holds door in open position and cannot close unless button is pulled upwards.
- All individual pieces are replaceable if damaged (handle, guide, individual brackets, etc.).
- Switch brackets are pre-drilled to accommodate SPF –RFID switches and LPF-RFID switches – both industry standard sizes.

INSTALLATION: Always use the recommended bolt sizes to fix the brackets and switches. Ensure the machine is safe and test the rear escape function if used.

MAINTENANCE:

Every Month: Check for signs of mechanical damage and wear. Replace any part showing damage. Ensure the machine is safe and test the rear escape function if used.

IDEM SAFETY SWITCHES Ltd., 2 Ormside Close, Hindley Industrial Estate, Hindley Green, Wigan, WN2 4HR UK. Tel: +44 (0)1942 257070 Fax.: +44 (0)1942 257076
IDEM (USA) 4416 Technology Drive, Fremont, CA 94538, USA. Tel:510-445-0751 Fax:1866-431-7064 email: sales@idemsafety.com Web: www.idemsafety.com

Doc: 102564
Aug 17