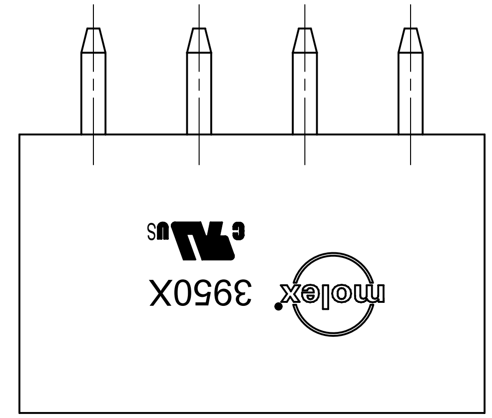

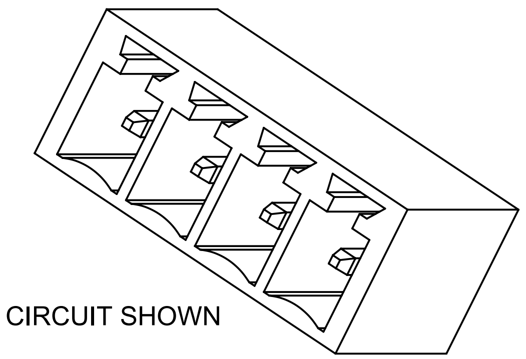

4 CIRCUIT SHOWN

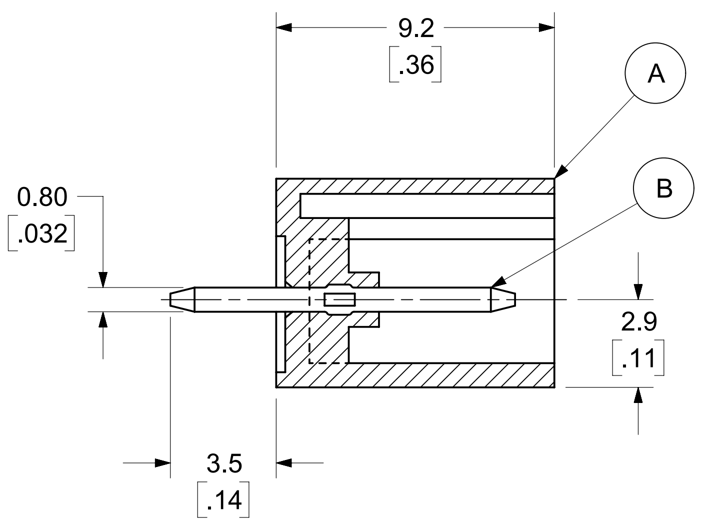

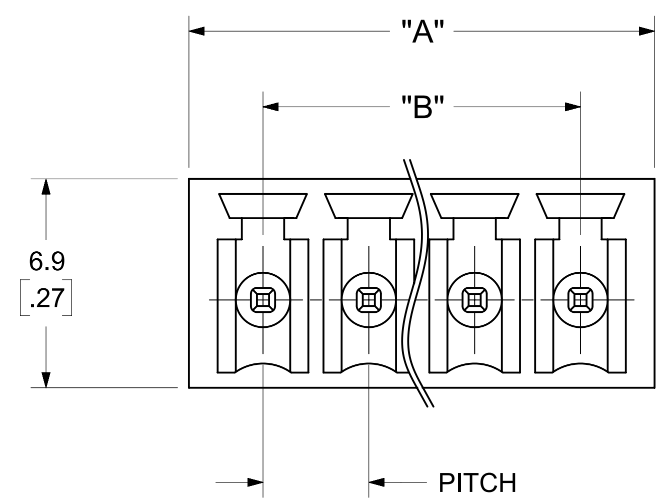

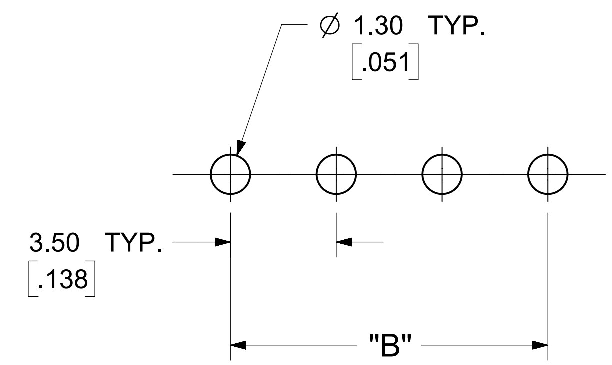

PCB LAYOUT

SPECIFICATIONS:

1. MATERIAL:
   A. BODY: PA66
   B. TERMINAL: BRASS
2. WIRE RANGE: N/A
3. ELECTRICAL RATING: 300V, 8A.
4. MAX TORQUE: N/A.
5. WIRE STRIP LENGTH: N/A.
6. OPERATING TEMPERATURE: -40°C to +105°C.
7. A = (N x P) + 1.4MM
8. B = (N - 1) x P
9. P (PITCH) = 3.5MM (.138").
10. N = NUMBER OF POSITIONS AVAILABLE 2 THROUGH 20.

TOLERANCES			
MM	TOL	INCH	TOL
0-6	±0.25	0-.24	±.010
>6-30	±0.40	.24-1.18	±.016
>30-120	±0.50	1.18-4.76	±.020
>120	±0.80	>4.76	±.031

PRE-RELEASE REFERENCE USE ONLY

THIS DRAWING CONTAINS INFORMATION THAT IS PROPRIETARY TO MOLEX ELECTRONIC TECHNOLOGIES, LLC AND SHOULD NOT BE USED WITHOUT WRITTEN PERMISSION

SYMBOLS = 0

DIMENSION UNITS: MM/INCH | SCALE: 4:1

GENERAL TOLERANCES (UNLESS SPECIFIED)

	MM	INCH
4 PLACES	±	±
3 PLACES	±	± SEE CHART
2 PLACES	± SEE CHART	± SEE CHART
1 PLACE	± SEE CHART	±
0 PLACES	±	±
ANGULAR TOL	±	

DRAFT WHERE APPLICABLE MUST REMAIN WITHIN DIMENSIONS

CURRENT REV DESC: MIGRATION TO ECTR/NX

EC NO: 619929
DRWN: ABENJAMINLW 2019/06/10
CHK'D: DACHAMMER 2019/07/01
APPR:

INITIAL REVISION:
DRWN: LROTHAUS 2006/01/09
APPR: JPAWLICK 2006/01/10

THIRD ANGLE PROJECTION | DRAWING: B-SIZE | SERIES: 39501

molex

3.5MM, EURO HEADER
VERTICAL, CLOSED END

PRODUCT CUSTOMER DRAWING

DOCUMENT NUMBER: SD-39501-001 | DOC TYPE: PSD | DOC PART: 001 | REVISION: B2

MATERIAL NUMBER: SEE SHEET-2 | CUSTOMER: GENERAL MARKET | SHEET NUMBER: 1 OF 2

DOCUMENT STATUS | RV | RELEASE DATE

FORMAT: Eng-lega-master-tb-prod-B
REVISION: D
DATE: 2018/01/18

DESCRIPTION	CIRCUIT SIZE	MATERIAL NUMBERS												DIMENSIONAL INFORMATION			
		BLACK						GREEN									
		100% TIN			30 u" GOLD			100% TIN			30 u" GOLD						
		PRINTING OPTIONS			PRINTING OPTIONS			PRINTING OPTIONS			PRINTING OPTIONS			DIM. "A"		DIM. "B"	
		None	10AV	11AV	None	10AV	11AV	None	10AV	11AV	None	10AV	11AV	mm	inch	mm	inch
3.5MM, EURO HEADER, VERTICAL	2	395011002	395011302	395011402	395011502	395011802	395011902	395016002	395016302	395016402	395016502	395016802	395016902	8.40	.331	3.50	.138
3.5MM, EURO HEADER, VERTICAL	3	395011003	395011303	395011403	395011503	395011803	395011903	395016003	395016303	395016403	395016503	395016803	395016903	11.90	.469	7.00	.276
3.5MM, EURO HEADER, VERTICAL	4	395011004	395011304	395011404	395011504	395011804	395011904	395016004	395016304	395016404	395016504	395016804	395016904	15.40	.606	10.50	.413
3.5MM, EURO HEADER, VERTICAL	5	395011005	395011305	395011405	395011505	395011805	395011905	395016005	395016305	395016405	395016505	395016805	395016905	18.90	.744	14.00	.551
3.5MM, EURO HEADER, VERTICAL	6	395011006	395011306	395011406	395011506	395011806	395011906	395016006	395016306	395016406	395016506	395016806	395016906	22.40	.882	17.50	.689
3.5MM, EURO HEADER, VERTICAL	7	395011007	395011307	395011407	395011507	395011807	395011907	395016007	395016307	395016407	395016507	395016807	395016907	25.90	1.020	21.00	.827
3.5MM, EURO HEADER, VERTICAL	8	395011008	395011308	395011408	395011508	395011808	395011908	395016008	395016308	395016408	395016508	395016808	395016908	29.40	1.157	24.50	.965
3.5MM, EURO HEADER, VERTICAL	9	395011009	395011309	395011409	395011509	395011809	395011909	395016009	395016309	395016409	395016509	395016809	395016909	32.90	1.295	28.00	1.102
3.5MM, EURO HEADER, VERTICAL	10	395011010	395011310	395011410	395011510	395011810	395011910	395016010	395016310	395016410	395016510	395016810	395016910	36.40	1.433	31.50	1.240
3.5MM, EURO HEADER, VERTICAL	11	395011011	395011311	395011411	395011511	395011811	395011911	395016011	395016311	395016411	395016511	395016811	395016911	39.90	1.571	35.00	1.378
3.5MM, EURO HEADER, VERTICAL	12	395011012	395011312	395011412	395011512	395011812	395011912	395016012	395016312	395016412	395016512	395016812	395016912	43.40	1.709	38.50	1.516
3.5MM, EURO HEADER, VERTICAL	13	395011013	395011313	395011413	395011513	395011813	395011913	395016013	395016313	395016413	395016513	395016813	395016913	46.90	1.846	42.00	1.654
3.5MM, EURO HEADER, VERTICAL	14	395011014	395011314	395011414	395011514	395011814	395011914	395016014	395016314	395016414	395016514	395016814	395016914	50.40	1.984	45.50	1.791
3.5MM, EURO HEADER, VERTICAL	15	395011015	395011315	395011415	395011515	395011815	395011915	395016015	395016315	395016415	395016515	395016815	395016915	53.90	2.122	49.00	1.929
3.5MM, EURO HEADER, VERTICAL	16	395011016	395011316	395011416	395011516	395011816	395011916	395016016	395016316	395016416	395016516	395016816	395016916	57.40	2.260	52.50	2.067
3.5MM, EURO HEADER, VERTICAL	17	395011017	395011317	395011417	395011517	395011817	395011917	395016017	395016317	395016417	395016517	395016817	395016917	60.90	2.398	56.00	2.205
3.5MM, EURO HEADER, VERTICAL	18	395011018	395011318	395011418	395011518	395011818	395011918	395016018	395016318	395016418	395016518	395016818	395016918	64.40	2.535	59.50	2.343
3.5MM, EURO HEADER, VERTICAL	19	395011019	395011319	395011419	395011519	395011819	395011919	395016019	395016319	395016419	395016519	395016819	395016919	67.90	2.673	63.00	2.480
3.5MM, EURO HEADER, VERTICAL	20	395011020	395011320	395011420	395011520	395011820	395011920	395016020	395016320	395016420	395016520	395016820	395016920	71.40	2.811	66.50	2.618

PRE-RELEASE REFERENCE USE ONLY

TOLERANCES			
MM	TOL	INCH	TOL
0-6	±0.25	0-.24	±.010
>6-30	±0.40	.24-1.18	±.016
>30-120	±0.50	1.18-4.76	±.020
>120	±0.80	>4.76	±.031

SYMBOLS

= 0
= 0
= 0
= 0
= 0
= 0
= 0
= 0
= 0

THIS DRAWING CONTAINS INFORMATION THAT IS PROPRIETARY TO MOLEX ELECTRONIC TECHNOLOGIES, LLC AND SHOULD NOT BE USED WITHOUT WRITTEN PERMISSION

DIMENSION UNITS: MM/INCH
SCALE: 2:1

GENERAL TOLERANCES (UNLESS SPECIFIED)

	MM	INCH
4 PLACES	±	±
3 PLACES	±	± SEE CHART
2 PLACES	± SEE CHART	± SEE CHART
1 PLACE	± SEE CHART	±
0 PLACES	±	±
ANGULAR TOL	±	

DRAFT WHERE APPLICABLE MUST REMAIN WITHIN DIMENSIONS

CURRENT REV DESC: MIGRATION TO ECTR/NX

EC NO: 619929
DRWN: ABENJAMINLW 2019/06/10
CHK'D: DACHAMMER 2019/07/01
APPR:

INITIAL REVISION:
DRWN: LROTHAUS 2006/01/09
APPR: JPAWLICK 2006/01/10

THIRD ANGLE PROJECTION | DRAWING: B-SIZE | SERIES: 39501

molex

3.5MM, EURO HEADER
VERTICAL, CLOSED END

PRODUCT CUSTOMER DRAWING

DOCUMENT NUMBER	DOC TYPE	DOC PART	REVISION
SD-39501-001	PSD	001	B2

MATERIAL NUMBER	CUSTOMER	SHEET NUMBER
SEE TABLE	GENERAL MARKET	2 OF 2

DOCUMENT STATUS	RV	RELEASE DATE	

FORMAT: Eng-legal-portrait-prod-B
REVISION: D
DATE: 2018/01/18

3950X SERIES
3.50mm HEADERS

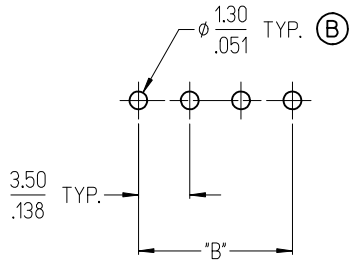

3952X & 3954X SERIES
5.00mm HEADERS
5.00mm FIXED

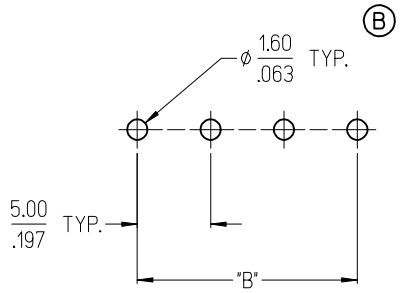

3953X SERIES
5.08mm HEADERS

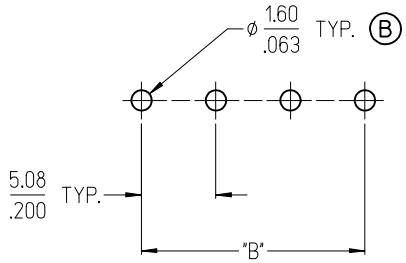

3951X SERIES
3.81mm HEADERS

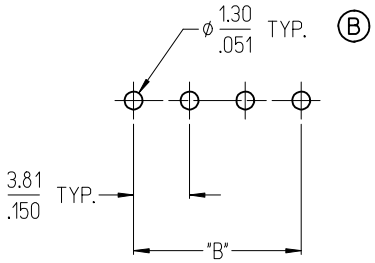

3954X SERIES
5.00mm FIXED

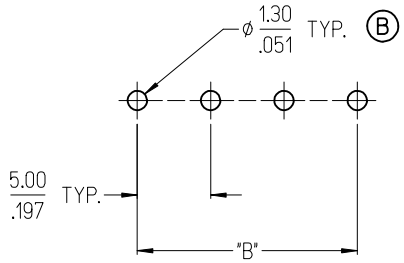

3954X SERIES
5.08mm FIXED

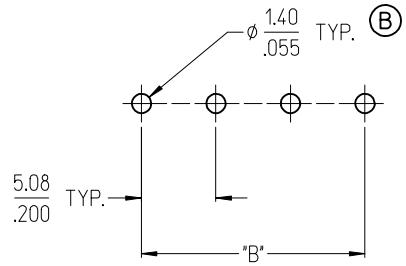

NOTES:

1. REFER TO INDIVIDUAL PRODUCT SALES DRAWINGS FOR "B" DIMENSION.
2. DOES NOT APPLY TO DUAL LEVEL HEADERS, SERIES 39528 AND 39538.
3. TYP. = TYPICAL.

TOLERANCES			
MM	TOL	INCH	TOL
0-6	±0.25	0-.24	±.010
>6-30	±0.40	.24-1.18	±.016
>30-120	±0.50	1.18-4.76	±.020
>120	±0.80	>4.76	±.031

REVISED DOC TOL
EC NO: IPG2017-0881
DRWN:VBASUTHKARP 2017/03/23
CH'KD:
APPR:BRUPERT 2017/04/18
DESCRIPTION
REV
B1

QUALITY SYMBOLS
▼=0
Ⓒ=0

GENERAL TOLERANCES (UNLESS SPECIFIED)	mm	INCH
4 PLACES	± ---	± ---
3 PLACES	± ---	± ---
2 PLACES	± ---	± ---
1 PLACE	± ---	± ---
ANGULAR ±---°		

DRAFT WHERE APPLICABLE MUST REMAIN WITHIN DIMENSIONS

DIMENSION STYLE: MM/IN
SCALE
DESIGN UNITS: INCH
THIRD ANGLE PROJECTION

DRAWN BY: C. YORK — DATE: 2006/08/25
CHECKED BY: J. MACNEIL — DATE: 2006/08/25
APPROVED BY: J. MACNEIL — DATE: 2006/08/25
MATERIAL NO.: --

TITLE: RECOMMENDED PCB LAYOUT FOR ESE TERMINAL BLOCKS

molex MOLEX INCORPORATED

DOCUMENT NO.: SD-39501-002
SHEET NO.: 1 OF 1

SIZE: B

THIS DRAWING CONTAINS INFORMATION THAT IS PROPRIETARY TO MOLEX INCORPORATED AND SHOULD NOT BE USED WITHOUT WRITTEN PERMISSION

3950X SERIES
3.50mm HEADERS

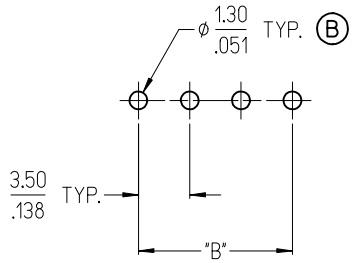

3952X & 3954X SERIES
5.00mm HEADERS
5.00mm FIXED

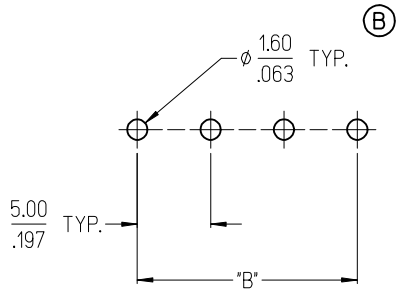

3953X SERIES
5.08mm HEADERS

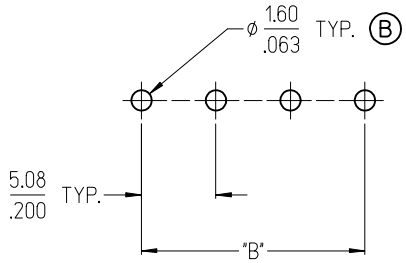

3951X SERIES
3.81mm HEADERS

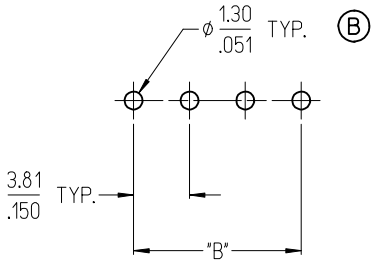

3954X SERIES
5.00mm FIXED

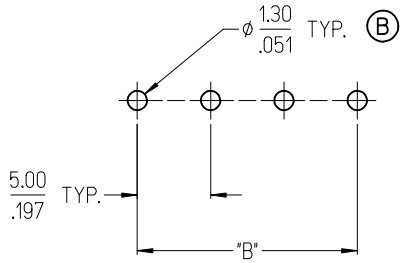

3954X SERIES
5.08mm FIXED

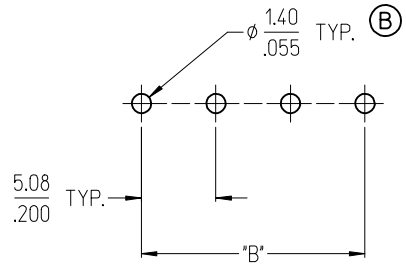

NOTES:

1. REFER TO INDIVIDUAL PRODUCT SALES DRAWINGS FOR "B" DIMENSION.
2. DOES NOT APPLY TO DUAL LEVEL HEADERS, SERIES 39528 AND 39538.
3. TYP. = TYPICAL.

TOLERANCES			
MM	TOL	INCH	TOL
0-6	±0.25	0-.24	±.010
>6-30	±0.40	.24-1.18	±.016
>30-120	±0.50	1.18-4.76	±.020
>120	±0.80	>4.76	±.031

REVISED DOC TOL
EC NO: IPG2017-0881
DRWN:VBASUTHKARP 2017/03/23
CH'KD:
APPR:BRUPERT 2017/04/18
DESCRIPTION
REV
B1

QUALITY SYMBOLS
▼=0
Ⓒ=0

GENERAL TOLERANCES (UNLESS SPECIFIED)	mm	INCH
4 PLACES	± ---	± ---
3 PLACES	± ---	± ---
2 PLACES	± ---	± ---
1 PLACE	± ---	± ---
ANGULAR ±---°		

DRAFT WHERE APPLICABLE MUST REMAIN WITHIN DIMENSIONS

DIMENSION STYLE: MM/IN
SCALE
DESIGN UNITS: INCH
THIRD ANGLE PROJECTION

DRAWN BY: C. YORK — DATE: 2006/08/25
CHECKED BY: J. MACNEIL — DATE: 2006/08/25
APPROVED BY: J. MACNEIL — DATE: 2006/08/25
MATERIAL NO.: --

TITLE: RECOMMENDED PCB LAYOUT FOR ESE TERMINAL BLOCKS

molex MOLEX INCORPORATED

DOCUMENT NO.: SD-39501-002
SHEET NO.: 1 OF 1

SIZE: B

THIS DRAWING CONTAINS INFORMATION THAT IS PROPRIETARY TO MOLEX INCORPORATED AND SHOULD NOT BE USED WITHOUT WRITTEN PERMISSION