RFA-100-010	CUSTOMER PRODUCT SPECIFICATION SHEET	RoHS Compliant

RFA-100-010: SMA ANTENNA WITH ELBOW, 2.4GHz~2.5Ghz, ADDITIONAL SNAP 45°

Material and plating:

1. SMA Plug: Brass, Nickel plating
2. Bottom Base: PC+PBT, Black
3. Rivet: POM, Black
4. Upper Base: PC+PBT, Black
5. Cap: TPEE, Black

Electrical

Frequency Range: 2.4GHz~2.5Ghz,
Impendence: 50Ω
VSWR: 2.0 max.
Radiation: Omni
Gain: 2dBi +/-0.5
Polarization: Vertical
Maximum Power: 1W

Mechanical & Environment

Operating Temperature: -20°C to +65°C
Weight: 7.4g
Lead free ROHS

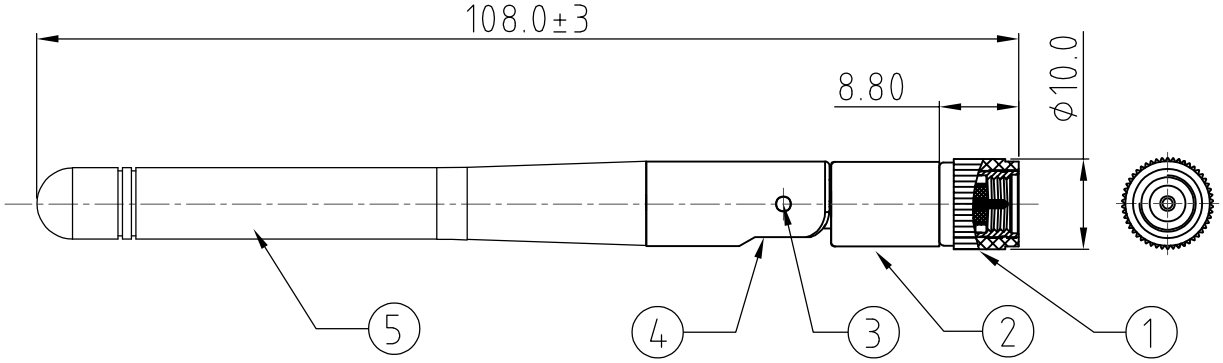

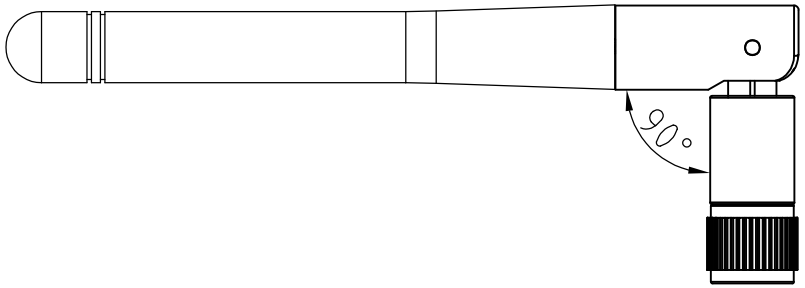

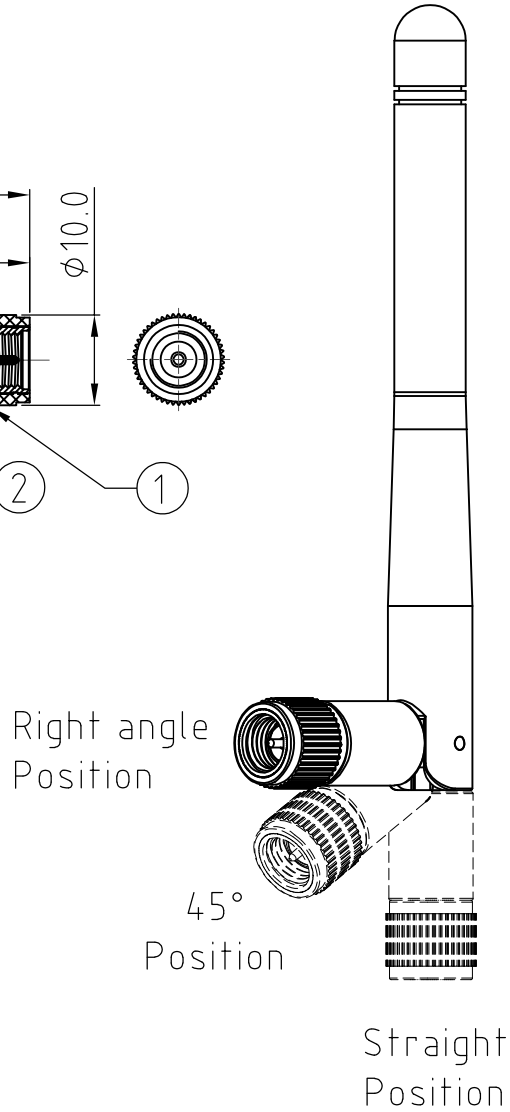

REV	DATE & DRN	
1.0	04/08/23 - CC	RELEASE
1.1	13/05/25 - NYW	ADD GCT LOGO.

Scale: NTS	THIRD ANGLE	Unstated Tolerances: .X ± 0.30 .XX ± 0.20 .XXX ± 0.10 ANGLES	Material SEE NOTE	GCT GradConn www.gct.co www.gradconn.com
Drawn: CC				
App'd: PH	Title SMA Antenna		NOT TO SCALE	
Date: 13 MAY '25	Revision: 1.1		Unit: mm	

© THIS DRAWING IS CONFIDENTIAL AND MUST NOT BE COPIED OR DISCLOSED WITHOUT WRITTEN CONSENT

Type: RFA-100-010

RFA-100-010

Drawing Number:

Sheet 1 of 1

Drawing © E and O E

RFA-100-010 Antenna

RF Antenna Stick | Single Band | SMA Plug interface

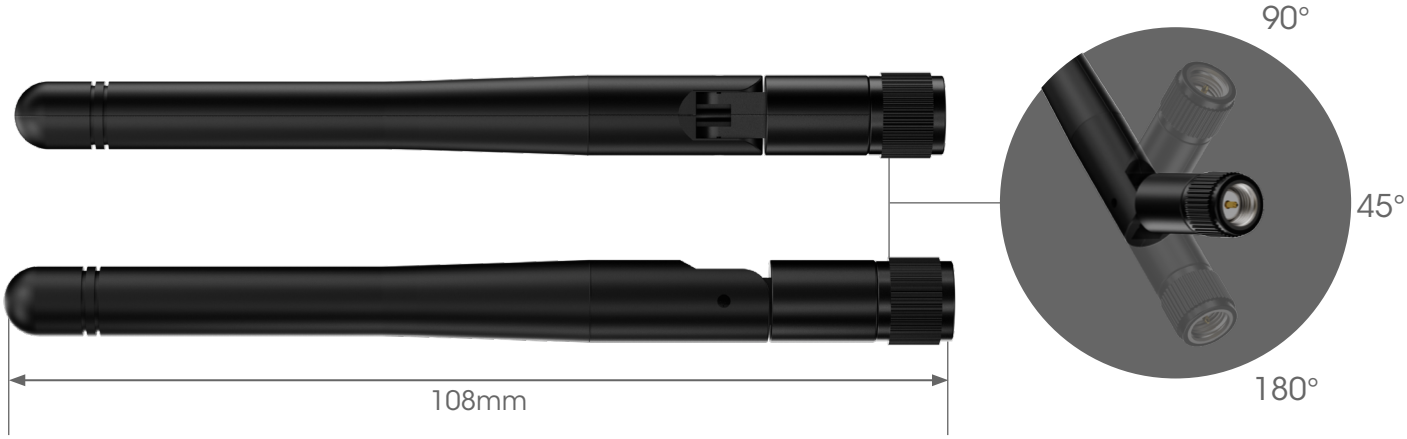

Electrical Specifications

Description	Specification
Frequency Range/s	2400-2500MHz
Antenna Type	Stick Antenna
Number of Bands	1
Radiation Pattern	Omnidirectional
Polarization	Linear
Max. Input Power	1 Watt
Impedance	50Ω

Frequency	Return Loss	Peak Gain	Average Efficiency
2400-2500MHz	< -10.0 dB	2.0 dBi	67%

Mechanical Specifications

Description	Specification
Lengh	108 ± 3mm
Swivel Elbow	180°, 90°, 45°
Weight	7.9g
Termination	SMA
Radome Material	PC+PBT
Operating Temprature	-20°C to 65°C
Compliance	RoHS

Applications

Wireless Communication: Wi-Fi (2.4GHz), Bluetooth, Zigbee

Disclaimer: The image shown is for illustration purposes only and may not be an exact representation of the product.

Copyright © 2025 GCT (Global Connector Technology) . All Rights Reserved

Performance

The test setup and measurements were conducted in a 3D anechoic chamber

Return Loss (dB) Chart

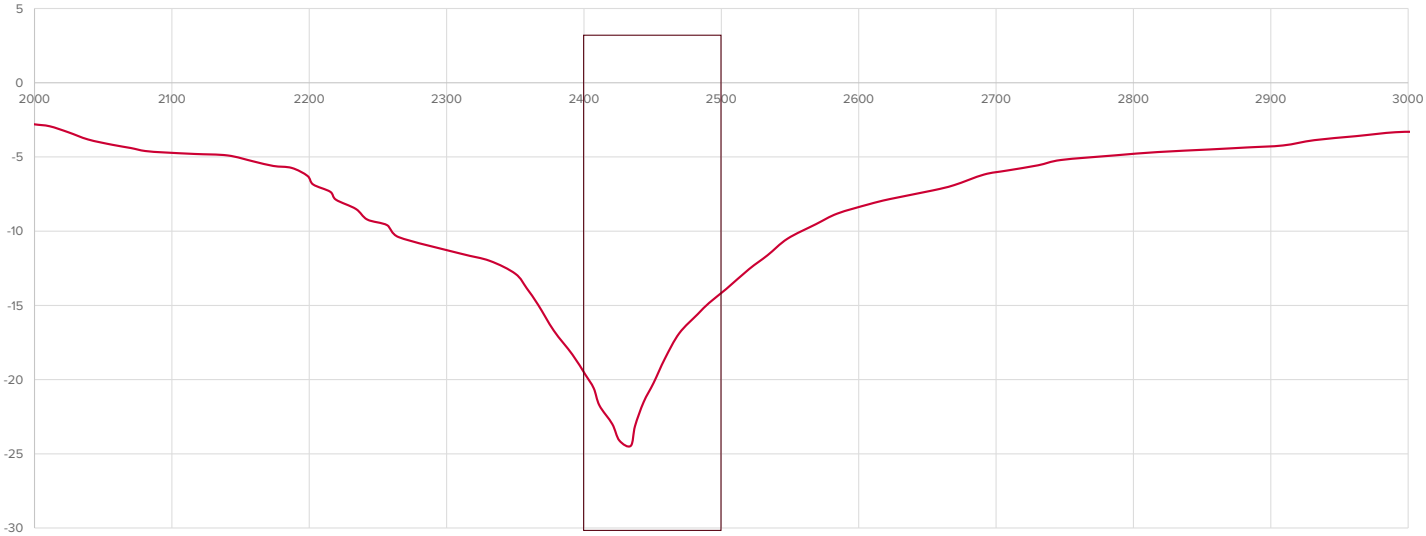

Efficiency

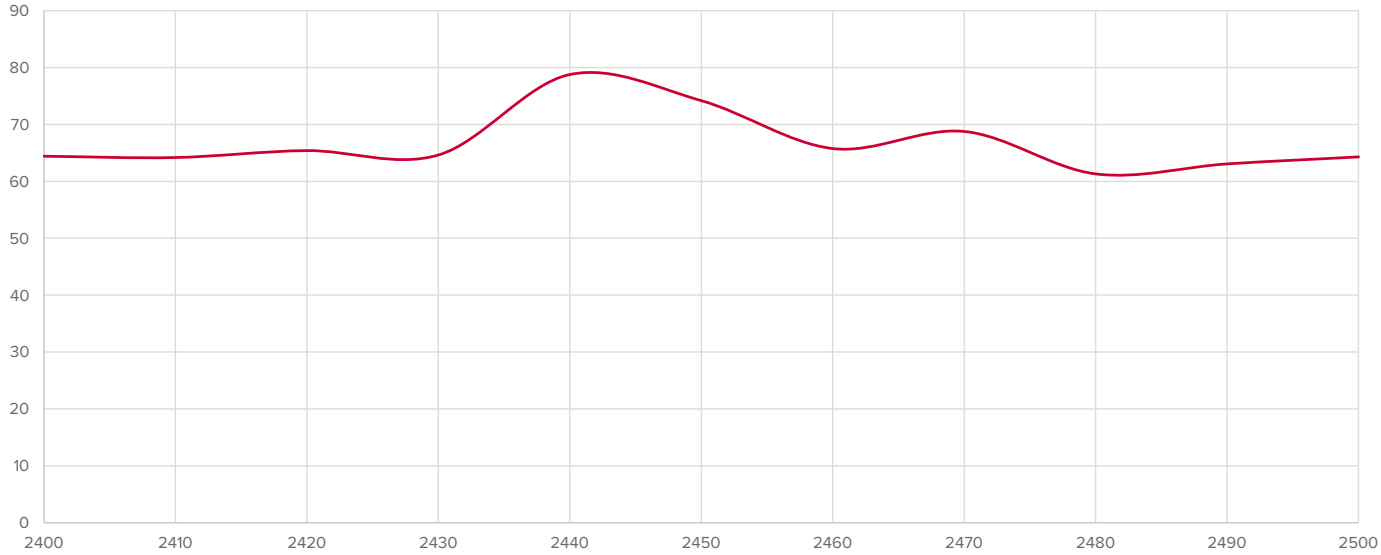

Disclaimer: The image shown is for illustration purposes only and may not be an exact representation of the product.

Copyright © 2025 GCT (Global Connector Technology) . All Rights Reserved

Radiation Patterns

2400-2500MHz

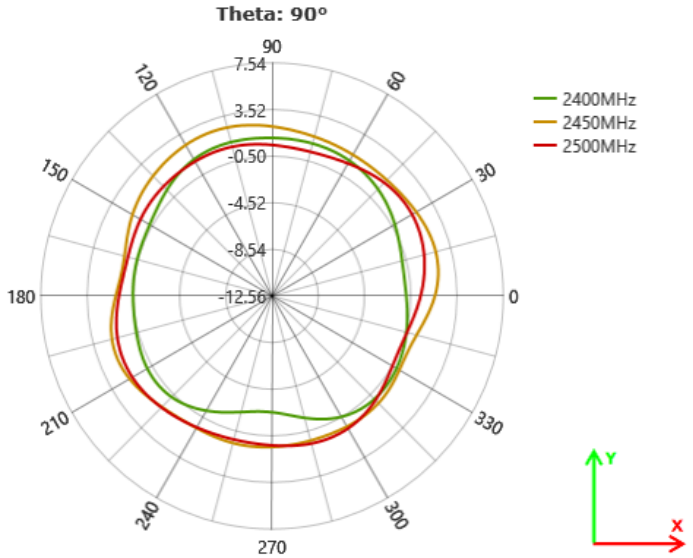

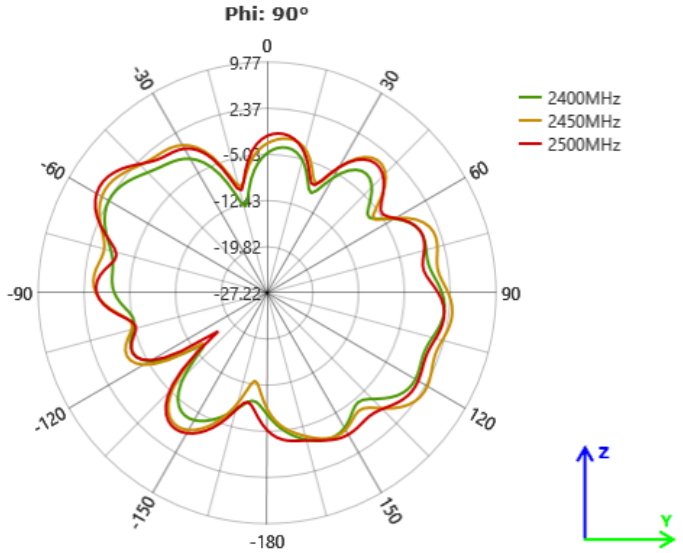

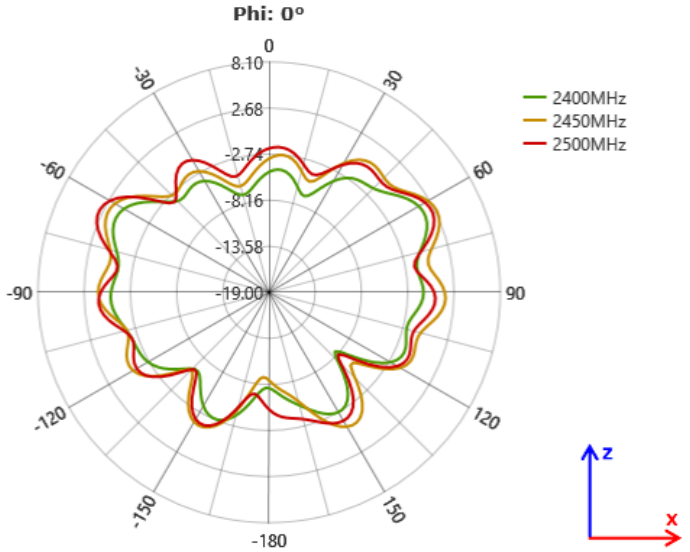

Disclaimer: The image shown is for illustration purposes only and may not be an exact representation of the product.

Copyright © 2025 GCT (Global Connector Technology) . All Rights Reserved