ENTRELEC TERMINAL BLOCKS

Master catalog

ENTRELEC Terminal Blocks

Master catalog

SNK SERIES TERMINAL BLOCKS

DEDICATED APPLICATIONS TERMINAL BLOCKS

RGW RING LUG TERMINAL BLOCKS

DBL POWER DISTRIBUTION BLOCKS

ESSAILEC® TEST BLOCKS

RAILWAY APPLICATIONS TERMINAL BLOCKS

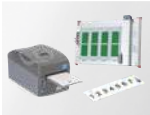

MARKING SOLUTIONS

EASY RAIL DESIGNER 3D

1-1773980-7_Couv1-summary_TE

1-1773980-7_EN - Edition February 2020

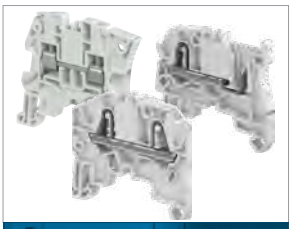

SNK SERIES TERMINAL BLOCKS

PI-Spring, screw clamp and pluggable technologies

ENTRELEC Terminal Blocks

Explanatory page

Here is the first SNK Series Terminal Blocks interactive catalog which contains numerous new functionalities:

- ☑ Additional information, about the product pages: in the table, click on the product order code to obtain the data sheet, the agreement and all technical information regarding that reference.
- ☑ A dedicated page to the SNK challenge videos and the SNK video
- ☑ A tab system on the side of the Flipbook helps you navigate easily inside the catalog
- ☑ Interactive summaries. One click on an entry leads you to the desired page.

Receive one link only in your email to open the Flipbook; once opened, you can download the PDF, only if you need to. No overload in your email box nor on your hard drive.

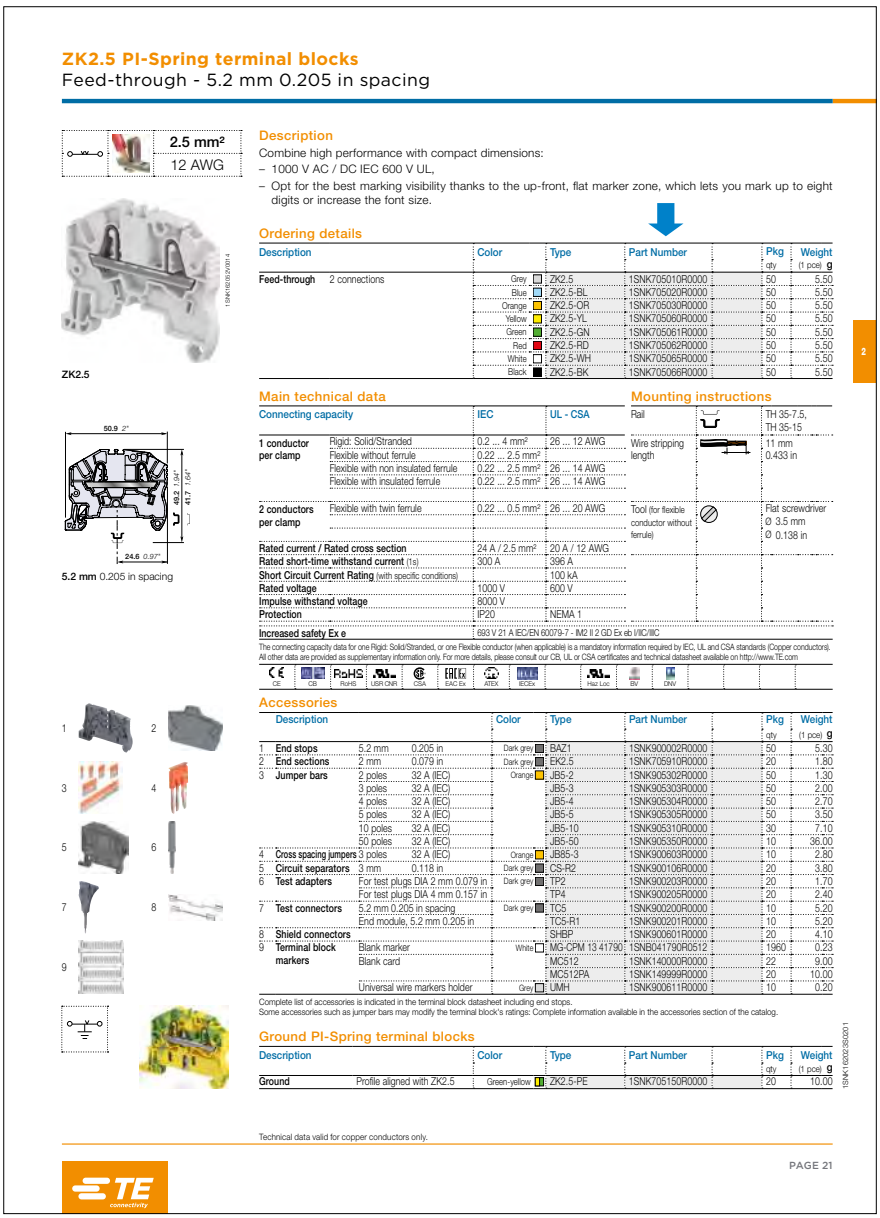

ZK2.5 PI-Spring terminal blocks
Feed-through - 5.2 mm 0.205 in spacing

2.5 mm²
12 AWG

Description
Combine high performance with compact dimensions:
- 1000 V AC / DC IEC 600 V UL,
- Opt for the best marking visibility thanks to the up-front, flat marker zone, which lets you mark up to eight digits or increase the font size.

ZK2.5

Ordering details

Description		Color	Type	Part Number	Pkg qty	Weight (1 pce) g
Feed-through	2 connections	Grey	ZK2.5	1SNK705010R0000	50	5.50
		Blue	ZK2.5-BL	1SNK705020R0000	50	5.50
		Orange	ZK2.5-OR	1SNK705030R0000	50	5.50
		Yellow	ZK2.5-YL	1SNK705060R0000	50	5.50
		Green	ZK2.5-GN	1SNK705061R0000	50	5.50
		Red	ZK2.5-RD	1SNK705062R0000	50	5.50
		White	ZK2.5-WH	1SNK705065R0000	50	5.50
		Black	ZK2.5-BK	1SNK705066R0000	50	5.50

50.9 2"
5.2 mm 0.205 in spacing

Main technical data

Connecting capacity		IEC	UL - CSA
1 conductor per clamp	Rigid: Solid/Stranded	0.2 ... 4 mm²	26 ... 12 AWG
	Flexible without ferrule	0.22 ... 2.5 mm²	
	Flexible with non insulated ferrule	0.22 ... 2.5 mm²	26 ... 14 AWG
	Flexible with insulated ferrule	0.22 ... 2.5 mm²	26 ... 14 AWG
2 conductors per clamp	Flexible with twin ferrule	0.22 ... 0.5 mm²	26 ... 20 AWG
Rated current / Rated cross section		24 A / 2.5 mm²	20 A / 12 AWG
Rated short-time withstand current (1s)		300 A	396 A
Short Circuit Current Rating (with specific conditions)			100 kA
Rated voltage		1000 V	600 V
Impulse withstand voltage		8000 V	
Protection		IP20	NEMA 1
Increased safety Ex e		693 V 21 A IEC/EN 60079-7 - IM2 II 2 GD Ex eb I/IIC/IIIC	

Mounting instructions

Rail	TH 35-7.5, TH 35-15
Wire stripping length	11 mm 0.433 in
Tool (for flexible conductor without ferrule)	Flat screwdriver Ø 3.5 mm Ø 0.138 in

The connecting capacity data for one Rigid: Solid/Stranded, or one Flexible conductor (when applicable) is a mandatory information required by IEC, UL and CSA standards (Copper conductors). All other data are provided as supplementary information only. For more details, please consult our CB, UL or CSA certificates and technical datasheet available on http://www.TE.com

CE, CB, RoHS, UR CNR, CSA, EAC Ex, ATEX, IECEx, Haz Loc, BV, DNV

Accessories

	Description			Color	Type	Part Number	Pkg qty	Weight (1 pce) g
1	End stops	5.2 mm	0.205 in	Dark grey	BAZ1	1SNK900002R0000	50	5.30
2	End sections	2 mm	0.079 in	Dark grey	EK2.5	1SNK705910R0000	20	1.80
3	Jumper bars	2 poles	32 A (IEC)	Orange	JB5-2	1SNK905302R0000	50	1.30
		3 poles	32 A (IEC)		JB5-3	1SNK905303R0000	50	2.00
		4 poles	32 A (IEC)		JB5-4	1SNK905304R0000	50	2.70
		5 poles	32 A (IEC)		JB5-5	1SNK905305R0000	50	3.50
		10 poles	32 A (IEC)		JB5-10	1SNK905310R0000	30	7.10
		50 poles	32 A (IEC)		JB5-50	1SNK905350R0000	10	36.00
4	Cross spacing jumpers	3 poles	32 A (IEC)	Orange	JB85-3	1SNK900603R0000	10	2.80
5	Circuit separators	3 mm	0.118 in	Dark grey	CS-R2	1SNK900106R0000	20	3.80
6	Test adapters	For test plugs DIA 2 mm 0.079 in		Dark grey	TP2	1SNK900203R0000	20	1.70
		For test plugs DIA 4 mm 0.157 in			TP4	1SNK900205R0000	20	2.40
7	Test connectors	5.2 mm 0.205 in spacing		Dark grey	TC5	1SNK900200R0000	10	5.20
		End module, 5.2 mm 0.205 in			TC5-R1	1SNK900201R0000	10	5.20
8	Shield connectors				SHBP	1SNK900601R0000	20	4.10
9	Terminal block markers	Blank marker		White	MG-CPM 13 41790	1SNB041790R0512	1960	0.23
		Blank card			MC512	1SNK140000R0000	22	9.00
					MC512PA	1SNK149999R0000	20	10.00
		Universal wire markers holder		Grey	UMH	1SNK900611R0000	10	0.20

Complete list of accessories is indicated in the terminal block datasheet including end stops.
Some accessories such as jumper bars may modify the terminal block's ratings. Complete information available in the accessories section of the catalog.

Ground PI-Spring terminal blocks

Description		Color	Type	Part Number	Pkg qty	Weight (1 pce) g
Ground	Profile aligned with ZK2.5	Green-yellow	ZK2.5-PE	1SNK705150R0000	20	10.00

Technical data valid for copper conductors only.

PAGE 21

Click on the product part number to obtain detailed information and agreements.

1SNK160094S0201

Videos

SNK challenges

Discover how our SNK terminal blocks are able to overcome any kind of challenge!

What is the link between a terminal block, a washing machine, an egg and a child's play?
Find it out quickly by watching our 6 episodes bellow.
Get tips and experience moments of suspense and fun!

Episode 1

Built for extreme conditions?

Episode 2

So fast to connect?

Episode 3

Available everywhere on time for everyone?

Episode 4

So efficient marking?

Episode 5

Common accessories for all technologies?

Episode 6

Mounting is a child's play?

SNK video

SNK Series - The innovative range.

1SNK160094S0201

The innovative SNK series is available in PI-Spring (Push-In and Spring), screw clamp and pluggable technologies with common accessories. Qualified for worldwide applications and severe environments such as hazardous locations, railways, marine and solar.

Summary_1

SNK series, terminal blocks

PI-Spring, screw clamp and pluggable technologies

Ranges and technologies presentation 2

PI-Spring terminal blocks 13

Screw clamp terminal blocks 71

Pluggable terminal blocks 161

Accessories 195

Marking solutions 237

Index 270

1-1773957-4_EN - Edition January 2020

TE Connectivity proposes one of the largest Din Rail Terminal block offering on the market with various technologies: screw, PI-Spring, spring, IDC, pluggable, stud, etc. found in over 8000 products & solutions.

	SNK terminal blocks		Dedicated applications terminal blocks		Terminal blocks for railway applications
			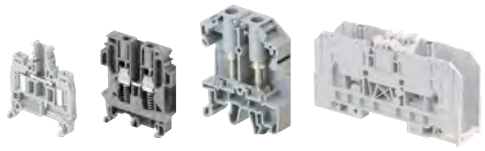		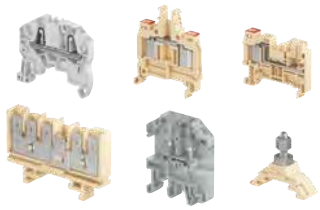
Scope	Qualified for worldwide applications and severe environments (such as hazardous locations, railways, marine and solar applications..). From 0.2 to 300 mm².		Specific terminal blocks and technologies for dedicated applications and markets.		The largest offering on the market for rolling stock and infrastructures.
Product families & functions	SNK PI-Spring technology 2.5 to 16 mm² 12 to 4 AWG	Feed-through Multi-deck Ground Disconnect for fuses Component holder	ADO System® (IDC) 0.22 to 4 mm² 24 to 12 AWG	ADO-ADO or ADO-screw clamp Feed-through / Multi-deck / Ground / Disconnect / for fuses / Component holder	SNK PI-Spring technology 2.5 to 16 mm² 12 to 4 AWG
			Safety (spring loaded) 0.22 to 10 mm² 24 to 6 AWG	Feed-through Disconnect Test & measurement	SNK pluggable screw & PI-Spring technologies 2.5 to 4 mm² 12 to 10 AWG
	SNK screw clamp technology 4 to 240 mm² 12 to 500 Kcmil	Feed-through Multi-deck Ground Disconnect for fuses Test & measurement Marshalling Component holder	Stud 25 to 300 mm² 4 AWG to 1000 Kcmil	One stud 2 studs One stud - One screw clamp	ADO System® (IDC) 1.5 to 4 mm² 16 to 12 AWG
			Ring lug 6 to 16 mm² 8 to 6 AWG	Feed-through Test & measurement	Stud 4 to 185 mm²
	SNK pluggable screw & PI-Spring technologies 2.5 to 4 mm² 12 to 10 AWG	Feed-through Multi-deck Ground	Miniblocks 1.5 to 6 mm² 18 to 8 AWG	Screw clamp Spring ADO System® (IDC)	Quick-connect 2.5 to 6 mm²
			Other types Test & measurement: with sliding link, blade, plug Pluggable: feed-through, double deck, disconnect Sensors/actuators: screw, spring, ADO system (IDC) Installation: screw, spring Protection: ground + neutral Component holders: screw, spring, ADO system (IDC)		

www.te.com

	DBL power distribution blocks	ESSAILEC® test blocks	Interfast PLC pre-wiring system	Marking solutions
				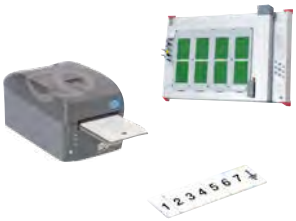
	The preferred choice for primary power distribution and solar applications.	Test blocks for safe and easy testing on secondary circuits of current and voltage transformers and sensors.	PLC pre-wiring system for fast, flexible, reliable connection of PLC's in process automation applications.	Markers & marking systems for all identification requirements in electrical panels.
	From 80 A up to 550 A (IEC) Modular blocks: single pole, three & four poles, up to 12 outputs Terminal blocks types: 2 to 10 poles, up to 20 outputs	Current and voltage sockets & plugs Simultaneous testing of 1 to 4 independent circuits on the same socket Several testing principle such as "make before break" for safe current transformer testing Panel and switchboard mounting : base, flush, rack, TH35 rail Multicircuits sockets & plugs	Interfast PCB: Compact & standard modules Interfast MS: Modular system based on terminal block technology Functions: – 1 to 4 wire connections (sensors) – Disconnect – Fuse – Signal indication – Relays – Optocouplers – Solenoid valve control – Galvanic isolation (2.5 kV).	Terminal block identification and group markers Wire and cable identification Component and equipment identification Panel identification Pre-printed markers for terminal blocks

1SNC160261S0201

1SNK160093S0201 - Rev. A

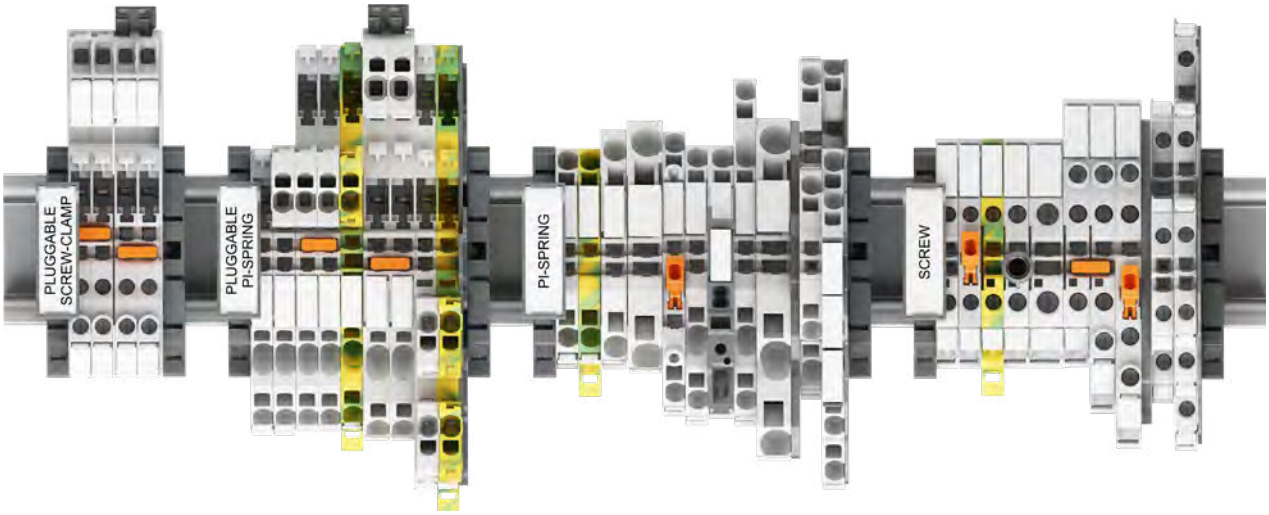

The innovative range available in PI-Spring (Push-In and Spring), screw clamp and pluggable technologies with common accessories.
Qualified for worldwide applications and severe environments such as hazardous locations, railways, marine and solar applications...

Speed up your projects

Smart connections, higher productivity
Up to 90% mounting time reduction with our PI-Spring, screw clamp and pluggable technologies.
Simplified selection and design
Intuitive codification, simplified catalogs, large technical data base.
Better project identification
20% larger marking area.
Pre-mark by hand or label before final marker installation.

Easy to install

Secured installation
Asymmetrical design avoid mounting and wiring errors.
Zero-retightening with our technologies.
Faster accessories mounting
Benefit from screwless ground connection, jumpers, end stops.
Smart design facilitating assembly process
Mounting, wiring, testing… made easy.

Optimized logistics

50% less accessories needed
End sections, circuit separators fit several blocks.
Common accessories
PI-Spring, screw and pluggable ranges share the same accessories.
Simplified inventory management
Significant reduction of part numbers to manage.

1SNK160093S0201 - Rev. A

PI-Spring technology
Two technologies in one connection

The patented design of TE Connectivity's PI-Spring can be used as a Push-in or traditional spring connection: Push-in and spring. The Push-in mode allows a direct one-step insertion of solid and flexible stranded wires with a ferrule, 50% faster than standard screw clamp technology.

Using the spring mode, very little effort is required to open the spring clamp with a screwdriver and insert the wire, which does not need a ferrule. The screwdriver locks in the terminal block after insertion, freeing up hands to manipulate wires or circuit drawings.

Features

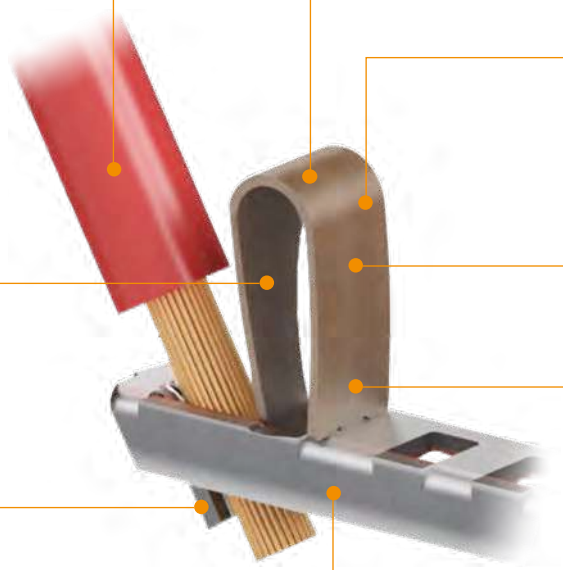

All certification testing performed with non prepared wires, ensuring perfect connections with or without ferrules

Connection elasticity and design strictly controlled to ensure an easy and safe insertion of both conductor and screwdriver

The PI-Spring technology has successfully passed aging tests (30 days temperature rise test and 14 days heat cycling test) guaranteeing the perfect long-term contact quality of our screwless technology

Flat surface of the PI-Spring makes wire and screwdriver insertion smoother and easier

Excellent pulling strength exceeding IEC standard requirements

Dimensions, coating and shape of the linking bar designed to get the lowest and most stable electrical contact value

Stainless steel PI-Spring for high corrosion resistance up to 1,000 hours salt mist resistance

Very good electrical contact even in applications where vibration and shock are an issue, such as railway

From 0.2 mm² up to 16 mm²
From 26 AWG up to 4 AWG

1SNK162052S0201 - Rev. A

Unique design, flies over time thanks to its reliability and safety
The TE Connectivity screw clamp technology is designed to avoids accidental releases due to vibrations, shocks or even abusive cable draw.

High density capacity
The screw clamp technology can fit up to two conductors per clamp which offers extended possibilities in electrical cabinets.

Features

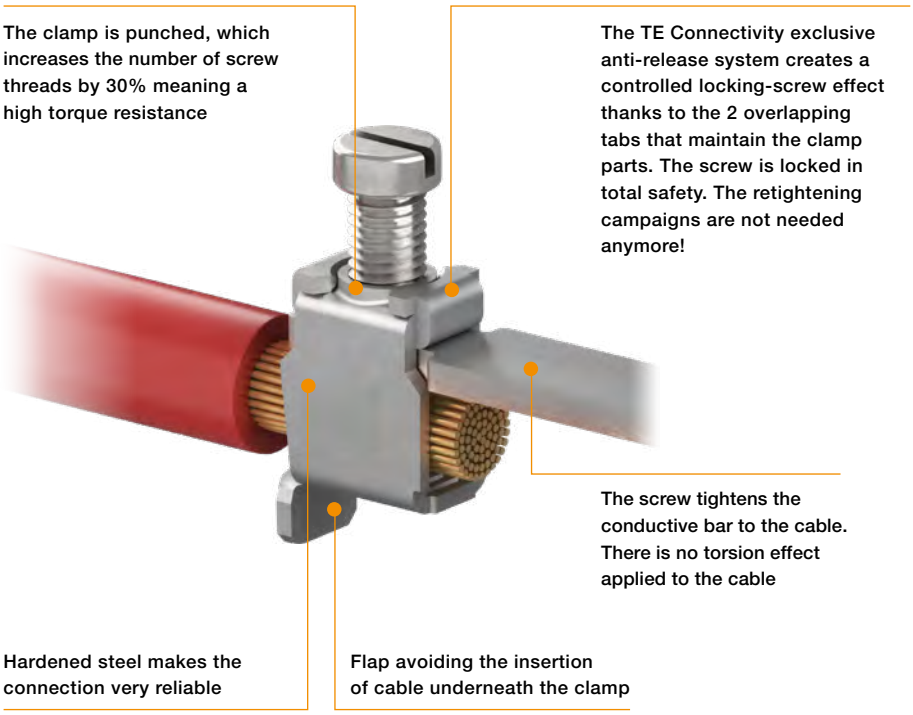

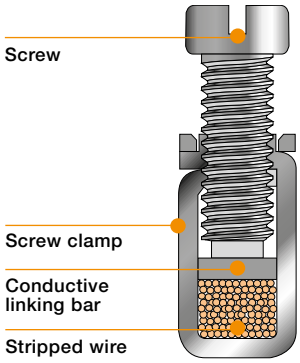

From 0.2 mm² up to 240 mm²

From 24 AWG up to 500 Kcmil

1SNK161087S0201 - Rev. A

Pluggable technology

The pluggable technology allows "plug and play" connection. It enables productivity savings, wiring optimization thanks to serialized pre-wired plugs harnesses, as well as secured final commissioning.

1

Features

The TE Connectivity plug is the most compact on the market thanks to the punched U-shaped linking bar allowing direct conductor contact.
TE Connectivity Patented design!

The lyres are made of copper alloy in order to offer maximized mechanical elasticity resistance
(superior to 50 matings/unmatings)

The TE Connectivity pluggable terminal blocks have successfully performed the marine environmental tests and meet the most severe rolling stock requirements in 3 axis vibrations and shock resistance (for PI-Spring pluggable terminal blocks versions)

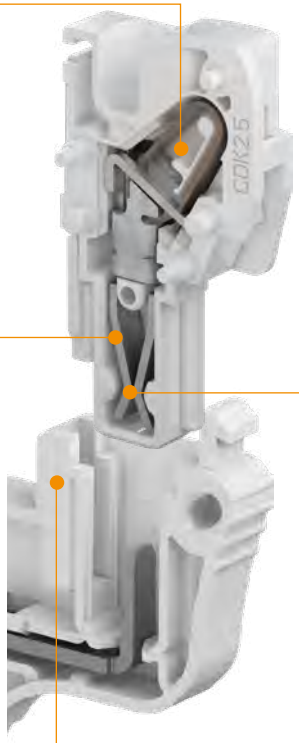

The chamfer shape guarantees auto-centering and mechanical integrity of the plug when inserted into the pluggable terminal block

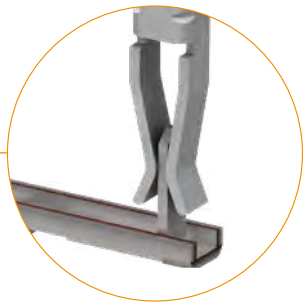

From 0.2 mm² up to 4 mm²

From 26 AWG up to 10 AWG

1SNK164011S0201

Qualified for worldwide markets, applications and for severe environments: vibration, shock, corrosion…

Industry and Commercial

SNK series, terminal blocks can be used worldwide in all types of industrial and commercial applications. All our products have CB, UL and CSA third party certificates delivered by independent laboratories. SNK series products are developed and qualified in accordance with the following international standards:
IEC 60947-1, IEC 60947-7-1, IEC 60947-7-2, IEC 60947-7-3, UL 1059, CSA C22.2 n°158-10.

RoHS

Solar

Thanks to their high voltage rating (up to 1500 VDC per IEC 60947-7-1 and 1000 VDC per UL 1059), SNK terminal blocks are ideally suited for use in solar equipment.

Waste and Water

SNK terminal blocks are well adapted to harsh environment conditions such as waste and water applications.
They have successfully passed the salt mist test in accordance with IEC 60068-2-11 (PI-Spring withstand up to >1000 h).
SNK terminal blocks are also compliant with flowing mixed gas corrosion test per IEC 60068-2-60 (test duration: 21 days).

1SNK160082S0201 - Rev. A

Railways

All SNK series products are suited to track-side fixed equipment.
For the more demanding environment of rolling stock applications, PI-Spring has been successfully tested in accordance with IEC 61373 requirements to resist high vibration and shock conditions (multi-axial waves, acceleration…).
The plastic material used is compliant with the flammability, smoke toxicity and opacity severe requirements of the traction segment and can be classified I2F2 per NF F 16-101 and NF F 16-102 standards; HL3 R22 per EN 45 545 standard and V0 per UL94 standard.
It complies with NFPA 130 per ASTM E 162 and ASTM E 662 standards tests and with FR238.103 and BSS 7239 standards.

Hazardous locations

SNK series is certified IEC Ex in accordance with IEC 60079-0 and IEC 60079-7 (increased safety "Exe") world international standards for products used in explosive atmospheres.
In order to serve specific local market requirements, some SNK products have additional local certifications such as: ATEX, UL hazardous Locations…
SNK products have successfully passed toughest tests like the thermal endurance test: 2 weeks in hot environment at 95 °C (+90% RH) followed by 2 weeks at 125 °C and one day cold environment test (-65 °C). This proves the high mechanical performances of the SNK products.

hazloc

Marine

SNK products have proven their performance by successfully passing tests required for the most extreme conditions. (eg: salt mist, damp or dry heat and cold environments) per IEC 60068 standards.
In order to serve the worldwide marine markets requirements, SNK products have the following Marine certifications:
BV Marine, DNV, RINA, RMRS.

DNV

1SNK160082S0201 - Rev. A

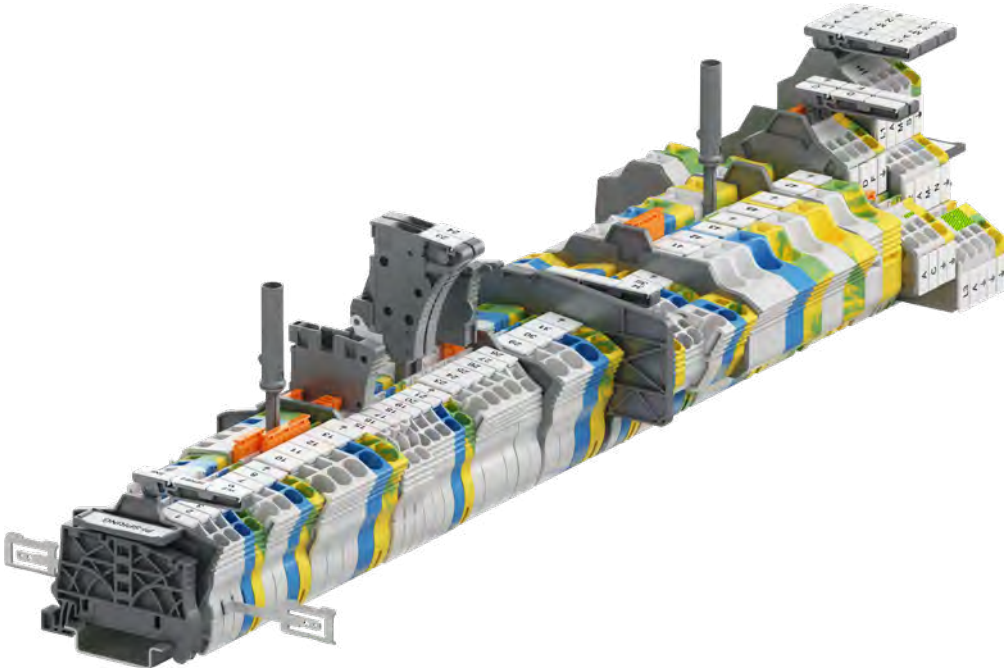

SNK series, terminal blocks
PI-Spring technology

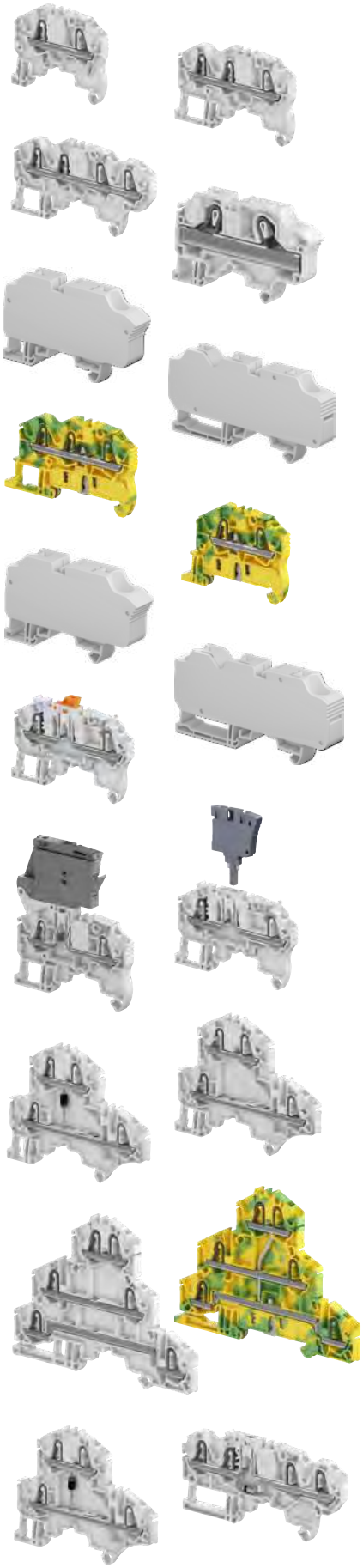

Technologies presentation			14
Overview			20
Feed-through			
2.5 mm² / 12 AWG	**ZK2.5**		21
	ZK2.5-3P	with 3 connections	22
	ZK2.5-4P	with 4 connections	23
4 mm² / 10 AWG	**ZK4**		24
	ZK4-3P	with 3 connections	25
	ZK4-4P	with 4 connections	26
6 mm² / 8 AWG	**ZK6**		27
	ZK6-3P	with 3 connections	28
10 mm² / 6 AWG	**ZK10**		29
	ZK10-PV		30
	ZK10-3P	with 3 connections	31
	ZK10-3P-PV	with 3 connections	32
16 mm² / 4 AWG	**ZK16**		33
	ZK16-PV		34
	ZK16-3P	with 3 connections	35
	ZK16-3P-PV	with 3 connections	36
Ground			
2.5 mm² / 12 AWG	**ZK2.5-PE**		37
	ZK2.5-PE-3P	with 3 connections	38
	ZP2.5-PE-4P	with 4 connections	39
4 mm² / 10 AWG	**ZK4-PE**		40
	ZK4-PE-3P	with 3 connections	41
	ZK4-PE-4P	with 4 connections	42
6 mm² / 8 AWG	**ZK6-PE**		43
	ZK6-PE-3P	with 3 connections	44
10 mm² / 6 AWG	**ZK10-PE**		45
	ZK10-PE-3P	with 3 connections	46
16 mm² / 4 AWG	**ZK16-PE**		47
	ZK16-PE-3P	with 3 connections	48
Disconnect with blade			
2.5 mm² / 12 AWG	**ZK2.5-S**	with test sockets	49
	ZK2.5-S-4P	with test sockets	50
	ZK2.5-S-R1		51
Disconnect with plug			
2.5 mm² / 12 AWG	**ZK2.5-SP**	with test sockets	52
	ZK2.5-SP-4P	with test sockets	53
For 5x20 fuses			
2.5 mm² / 12 AWG	**ZK2.5-SF**		54
	ZK2.5-SF-R	with blown fuse indicator	55
Double deck			
2.5 mm² / 12 AWG	**ZK2.5-D2**	2 feed-through circuits	56
	ZK2.5-D1	1 feed-through circuit	57
	ZK2.5-D2-PE	1 feed-through circuit and 1 ground circuit	58
	ZK2.5-D1-PE	1 ground circuit	59
Triple deck			
2.5 mm² / 12 AWG	**ZK2.5-T3**	3 feed-through circuits	60
	ZK2.5-T1	1 feed-through circuit	61
	ZK2.5-L-L-PE		62
	ZK2.5-L-N-PE	2 feed-through circuits and 1 ground circuit	63
	ZK2.5-T1-PE	1 ground circuit	64
Component holder			
2.5 mm² / 12 AWG	**ZK2.5-CH-4P-LR**		65
	ZK2.5-CH-4P-RL		66
	ZK2.5-D-CH-UD		67
	ZK2.5-D-CH-DU		68
	ZK2.5-D-CH2-DU-RL		69

The patented PI-Spring technology provides the benefits of both Push-In and Spring technologies in one connection

Speed up your projects

50% faster connection time with Push-in mode

Our Push-in connection technology allows:
A direct one step insertion with rigid and prepared flexible conductors.
Easy and quick insertion of the prepared flexible conductor or rigid conductor.

Reduced effort and conductor preparation time with spring mode

- Our connection requires minimal effort to insert wires with the screwdriver
- Flexible conductors preparation is not necessary.
- The screwdriver locks onto terminal freeing up hands.

Better project identification

- Circuit identification is improved thanks to the 20% larger marking area
- Pre-mark by hand or with label on our flat marking surface and start immediately the wiring, before the final markers mounting
- Spare markers re-printing in case of modifications.

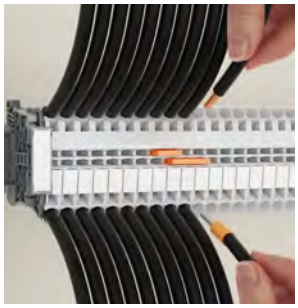

Push-in mode

Spring mode

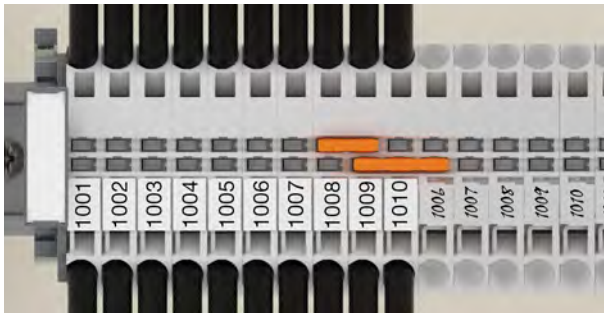

Clear circuit identification

1SNK162074S0201

Easy to install

Smart design facilitating assembly process

Mounting, wiring, testing… made easy

Avoid mounting and wiring errors: asymmetrical design allows immediate visual check in case of reversed terminal blocks.

Asymmetrical design avoids mounting error

Faster accessories mounting

Save up to 70% mounting time thanks to :

- screwless jumpers, component plugs, test devices, end stops and snap-in ground terminal blocks.

Screwless accessories

Snap-in ground terminal blocks

Closed jumper location allows great stiffness of the terminal block, avoid deflection while tightening and optimal jumper guiding.

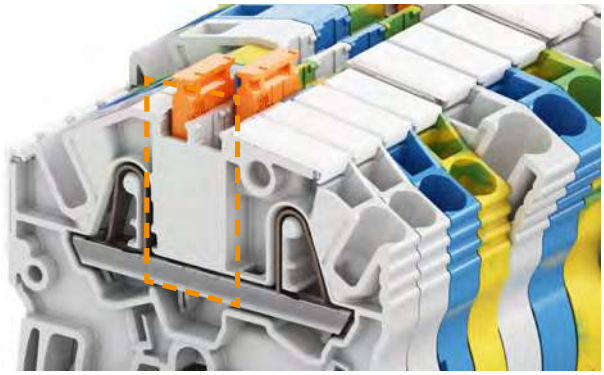

Closed jumper location for stiffness.

1SNK162074S0201

Easy to install

Smart accessories

Flexible test solutions from individual insulated test adapter to test connectors for complete assemblies testing.

- Direct plug-in into jumpers channels
- 5, 6, 8 mm spacing, mixing various spacing is possible
- 1000 V rating.

Plug-in individual test adapter. Plug-in test connector.

Component holder plugs for series or parallel component mounting (resistors, filters, diodes...).
Can be installed after wiring.
Series plug offers screwless component connection (no soldering).

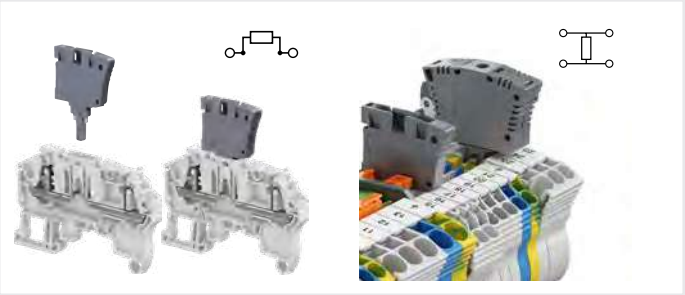

Series plug associated with disconnect blocks. Parallel plug to be installed between 2 blocks.

Smart plug-in jumpers:

Pre-cut poles removable by hand: clean cut.
Insulated up to 1000 V (avoid use of separators).
Predefined shapes in molding to easily identify connected poles with a pen.

Pre-cut poles easy removable by hand. Predefined shape to identify connected poles.

1SNK162074S0201

Optimized logistics

Reduce your accessories inventory by up to 50%

SNK PI-Spring, screw and pluggable ranges share the same accessories.

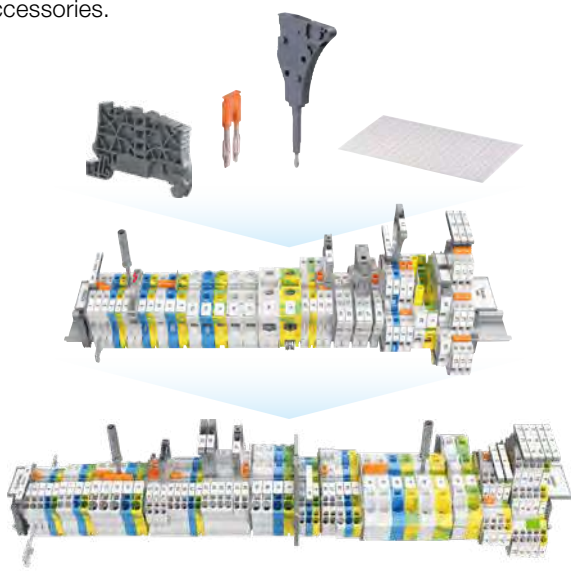

Shared accessories for SNK PI-Spring, screw and pluggable ranges

- All end sections and circuit separators fit several types and sizes of blocks
- One end section fits up to 21 models
- One circuit separator fits with 62 terminal blocks.

End sections and circuit separators fit several types and sizes of blocks

50% less inventory makes PI-Spring attractive to all worldwide markets

- The user selects one range but benefit from 2 connection modes (push-in and spring) which have global certifications and access to markets and applications worldwide
- Reduced packaging adapted to the usage (20 items packaging on some items).

Push-in range + Spring range

PI-Spring

Facilitate maintenance operations

Terminal blocks can be individually removed from a terminal assembly equipped with markers: TE Connectivity markers become independent after strip mounting. The markers remain on terminal in any situation.

Markers are interchangable: the smaller marker can fit any bigger block.

Maintenance operations facilitated

Reliable in harsh conditions

Qualified for worldwide markets, applications and for severe environments: vibration, shock, corrosion…

High corrosion resistance

PI-Spring clamp is made of high quality stainless steel.
Salt mist withstand up to 1,000 hours (as per IEC 60068).

1SNK162074S0201

2 Connections

Single deck
Feed-through
Ground
Disconnect
Fuse
Solar : 1500 VDC

NEW

3 Connections

Single deck
Feed-through
Ground
Solar: 1500 VDC

NEW

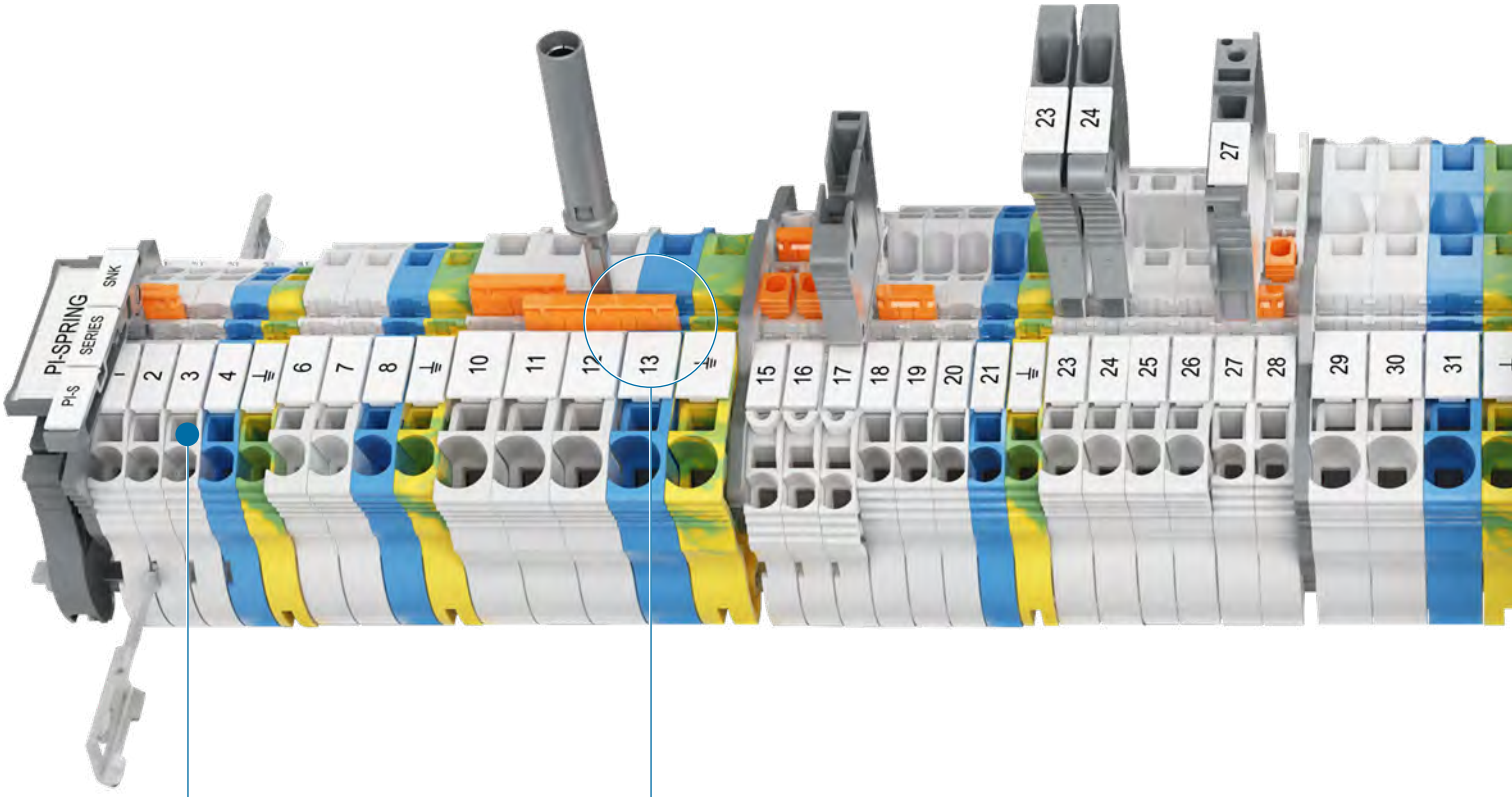

Voltage test
screwdriver entry point accepts Category II probes

Double central channels
allows multiconfigurations (jumpering, testing and measuring)

4 Connections

Single deck
Feed-through
Ground
Disconnect
Component holder

2x2 Connections

Double deck
Feed-through
Ground
Component holder

3x2 Connections

Triple deck
Feed-through
Ground

Two circuit separators
for the entire range

End section
can be used as circuit separator

Rotating label holder
easy plug-in in jumper channel

1SNK162068S0201 - Rév. A

Section		Feed-through			Ground			Component holder	
2.5 mm²	12 AWG	ZK2.5	ZK2.5-3P	ZK2.5-4P	ZK2.5-PE	ZK2.5-PE-3P	ZK2.5-PE 4P	ZK2.5-CH-4P-LR	ZK2.5-CH-4P-RL
4 mm²	10 AWG	ZK4	ZK4-3P	ZK4-4P	ZK4-PE	ZK4-PE-3P	ZK4-PE- 4P		
6 mm²	8 AWG	ZK6	ZK6-3P		ZK6-PE	ZK6-PE-3P			
10 mm²	6 AWG	ZK10	ZK10-3P		ZK10-PE	ZK10-PE-3P			
		ZK10-PV New	ZK10-3P-PV						
16 mm²	4 AWG	ZK16	ZK16-3P		ZK16-PE	ZK16-PE-3P			
		ZK16-PV New	ZK16-3P-PV						

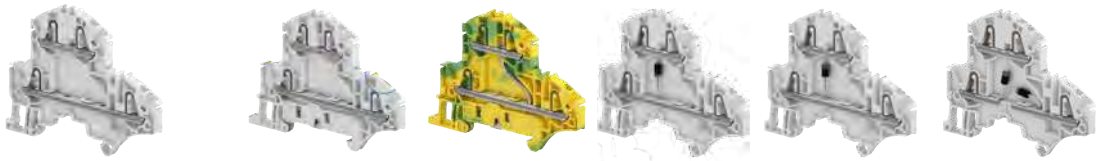

Double deck		Feed-through		Ground		Component holder		
Section								
2.5 mm²	12 AWG	ZK2.5-D2	ZK2.5-D1	ZK2.5-D2-PE	ZK2.5-D1-PE	ZK2.5-D-CH-UD	ZK2.5-D-CH-DU	ZK2.5-D-CH2-DU-RL

Triple deck		Feed-through		Ground	
Section					
2.5 mm²	12 AWG	ZK2.5-T3	ZK2.5-T1	ZK2.5-L-L-PE	ZK2.5-T1-PE
				ZK2.5-L-N-PE	

Disconnect		With blade		With plug		For 5x20 mm fuses		Aligned with ZK2.5-SF
Section								
2.5 mm²	12 AWG	ZK2.5-S	ZK2.5-S-4P	ZK2.5-SP	ZK2.5-SP-4P	ZK2.5-SF	ZK2.5-SF-R1	ZK2.5-S-R1
							ZK2.5-SF-R3	

Clamp - Channels for jumpering or testing - Test socket - Blown-fuse indicator

1SNK162020S0201 - Rev. B

ZK2.5 PI-Spring terminal blocks
Feed-through - 5.2 mm 0.205 in spacing

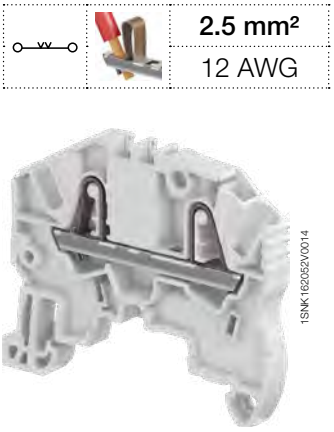

2.5 mm²
12 AWG

ZK2.5

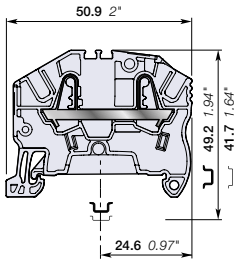

5.2 mm 0.205 in spacing

Description

Combine high performance with compact dimensions:
- 1000 V AC / DC IEC 600 V UL,
- Opt for the best marking visibility thanks to the up-front, flat marker zone, which lets you mark up to eight digits or increase the font size.

Ordering details

Description		Color	Type	Part Number		Pkg qty	Weight (1 pce) g
Feed-through	2 connections	Grey	ZK2.5	1SNK705010R0000		50	5.50
		Blue	ZK2.5-BL	1SNK705020R0000		50	5.50
		Orange	ZK2.5-OR	1SNK705030R0000		50	5.50
		Yellow	ZK2.5-YL	1SNK705060R0000		50	5.50
		Green	ZK2.5-GN	1SNK705061R0000		50	5.50
		Red	ZK2.5-RD	1SNK705062R0000		50	5.50
		White	ZK2.5-WH	1SNK705065R0000		50	5.50
		Black	ZK2.5-BK	1SNK705066R0000		50	5.50

Main technical data

Connecting capacity		IEC	UL - CSA
1 conductor per clamp	Rigid: Solid/Stranded	0.2 ... 4 mm²	26 ... 12 AWG
	Flexible without ferrule	0.22 ... 2.5 mm²	
	Flexible with non insulated ferrule	0.22 ... 2.5 mm²	26 ... 14 AWG
	Flexible with insulated ferrule	0.22 ... 2.5 mm²	26 ... 14 AWG
2 conductors per clamp	Flexible with twin ferrule	0.22 ... 0.5 mm²	26 ... 20 AWG
Rated current / Rated cross section		24 A / 2.5 mm²	20 A / 12 AWG
Rated short-time withstand current (1s)		300 A	396 A
Short Circuit Current Rating (with specific conditions)			100 kA
Rated voltage		1000 V	600 V
Impulse withstand voltage		8000 V	
Protection		IP20	NEMA 1
Increased safety Ex e		693 V 21 A IEC/EN 60079-7 - IM2 II 2 GD Ex eb I/IIC/IIIC	

The connecting capacity data for one Rigid: Solid/Stranded, or one Flexible conductor (when applicable) is a mandatory information required by IEC, UL and CSA standards (Copper conductors). All other data are provided as supplementary information only. For more details, please consult our CB, UL or CSA certificates and technical datasheet available on http://www.TE.com

CE, CB, RoHS, USR CNR, CSA, EAC Ex, ATEX, IECEx, Haz Loc, BV, DNV

Mounting instructions

Rail		TH 35-7.5, TH 35-15
Wire stripping length		11 mm 0.433 in
Tool (for flexible conductor without ferrule)		Flat screwdriver Ø 3.5 mm Ø 0.138 in

Accessories

	Description			Color	Type	Part Number		Pkg qty	Weight (1 pce) g
1	**End stops**	5.2 mm	0.205 in	Dark grey	BAZ1	1SNK900002R0000		50	5.30
2	**End sections**	2 mm	0.079 in	Dark grey	EK2.5	1SNK705910R0000		20	1.80
3	**Jumper bars**	2 poles	32 A (IEC)	Orange	JB5-2	1SNK905302R0000		50	1.30
		3 poles	32 A (IEC)		JB5-3	1SNK905303R0000		50	2.00
		4 poles	32 A (IEC)		JB5-4	1SNK905304R0000		50	2.70
		5 poles	32 A (IEC)		JB5-5	1SNK905305R0000		50	3.50
		10 poles	32 A (IEC)		JB5-10	1SNK905310R0000		30	7.10
		50 poles	32 A (IEC)		JB5-50	1SNK905350R0000		10	36.00
4	**Cross spacing jumpers**	3 poles	32 A (IEC)	Orange	JB85-3	1SNK900603R0000		10	2.80
5	**Circuit separators**	3 mm	0.118 in	Dark grey	CS-R2	1SNK900106R0000		20	3.80
6	**Test adapters**	For test plugs DIA 2 mm 0.079 in		Dark grey	TP2	1SNK900203R0000		20	1.70
		For test plugs DIA 4 mm 0.157 in			TP4	1SNK900205R0000		20	2.40
7	**Test connectors**	5.2 mm 0.205 in spacing		Dark grey	TC5	1SNK900200R0000		10	5.20
		End module, 5.2 mm 0.205 in			TC5-R1	1SNK900201R0000		10	5.20
8	**Shield connectors**				SHBP	1SNK900601R0000		20	4.10
9	**Terminal block markers**	Blank marker		White	MG-CPM 13 41790	1SNB041790R0512		1960	0.23
		Blank card			MC512	1SNK140000R0000		22	9.00
					MC512PA	1SNK149999R0000		20	10.00
		Universal wire markers holder		Grey	UMH	1SNK900611R0000		10	0.20

Complete list of accessories is indicated in the terminal block datasheet including end stops.
Some accessories such as jumper bars may modify the terminal block's ratings: Complete information available in the accessories section of the catalog.

Ground PI-Spring terminal blocks

Description		Color	Type	Part Number		Pkg qty	Weight (1 pce) g
Ground	Profile aligned with ZK2.5	Green-yellow	ZK2.5-PE	1SNK705150R0000		20	10.00

Technical data valid for copper conductors only.

1SNK162023S0201

ZK2.5-3P PI-Spring terminal blocks

Feed-through with 3 connections - 5.2 mm 0.205 in spacing

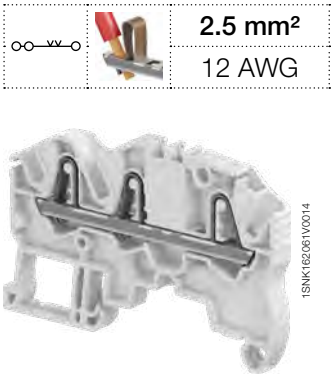

2.5 mm²
12 AWG

1SNK162061V0014

ZK2.5-3P

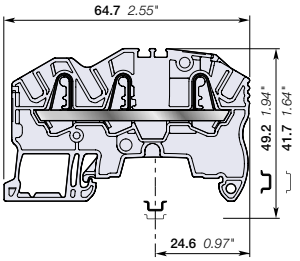

5.2 mm 0.205 in spacing

Description

Find all the features of the ZK2.5 terminal block with the added option of distributing or branching 3 conductors.

Ordering details

Description		Color	Type	Part Number		Pkg qty	Weight (1 pce) g
Feed-through	3 connections	Grey	ZK2.5-3P	1SNK705011R0000		50	7.40
		Blue	ZK2.5-3P-BL	1SNK705021R0000		50	7.40
		Orange	ZK2.5-3P-OR	1SNK705031R0000		50	7.40
		Yellow	ZK2.5-3P-YL	1SNK705067R0000		50	7.40
		Green	ZK2.5-3P-GN	1SNK705068R0000		50	7.40
		Red	ZK2.5-3P-RD	1SNK705069R0000		50	7.40
		White	ZK2.5-3P-WH	1SNK705072R0000		50	7.40
		Black	ZK2.5-3P-BK	1SNK705073R0000		50	7.40

Main technical data

Connecting capacity		IEC	UL - CSA
1 conductor per clamp	Rigid: Solid/Stranded	0.2 ... 4 mm²	26 ... 12 AWG
	Flexible without ferrule	0.22 ... 2.5 mm²	
	Flexible with non insulated ferrule	0.22 ... 2.5 mm²	26 ... 14 AWG
	Flexible with insulated ferrule	0.22 ... 2.5 mm²	26 ... 14 AWG
2 conductors per clamp	Flexible with twin ferrule	0.22 ... 0.5 mm²	26 ... 20 AWG
Rated current / Rated cross section		24 A / 2.5 mm²	20 A / 12 AWG
Rated short-time withstand current (1s)		300 A	396 A
Short Circuit Current Rating (with specific conditions)			100 kA
Rated voltage		1000 V	600 V
Impulse withstand voltage		8000 V	
Protection		IP20	NEMA 1
Increased safety Ex e		693 V 21 A IEC/EN 60079-7 - IM2 II 2 GD Ex eb I/IIC/IIIC	

Mounting instructions

Rail	TH 35-7.5, TH 35-15
Wire stripping length	11 mm 0.433 in
Tool (for flexible conductor without ferrule)	Flat screwdriver Ø 3.5 mm Ø 0.138 in

The connecting capacity data for one Rigid: Solid/Stranded, or one Flexible conductor (when applicable) is a mandatory information required by IEC, UL and CSA standards (Copper conductors). All other data are provided as supplementary information only. For more details, please consult our CB, UL or CSA certificates and technical datasheet available on http://www.TE.com

CE, CB, RoHS, USR CNR, CSA, EAC Ex, ATEX, IECEx, Haz Loc, BV, DNV

Accessories

	Description			Color	Type	Part Number		Pkg qty	Weight (1 pce) g
1	**End stops**	5.2 mm	0.205 in	Dark grey	BAZ1	1SNK900002R0000		50	5.30
2	**End sections**	2 mm	0.079 in	Dark grey	EK2.5-3P	1SNK705911R0000		20	2.40
3	**Jumper bars**	2 poles	32 A (IEC)	Orange	JB5-2	1SNK905302R0000		50	1.30
		3 poles	32 A (IEC)		JB5-3	1SNK905303R0000		50	2.00
		4 poles	32 A (IEC)		JB5-4	1SNK905304R0000		50	2.70
		5 poles	32 A (IEC)		JB5-5	1SNK905305R0000		50	3.50
		10 poles	32 A (IEC)		JB5-10	1SNK905310R0000		30	7.10
		50 poles	32 A (IEC)		JB5-50	1SNK905350R0000		10	36.00
4	**Cross spacing jumpers**	3 poles	32 A (IEC)	Orange	JB85-3	1SNK900603R0000		10	2.80
5	**Circuit separators**	3 mm	0.118 in	Dark grey	CS-R3	1SNK900107R0000		20	6.40
6	**Test adapters**	For test plugs DIA 2 mm 0.079 in		Dark grey	TP2	1SNK900203R0000		20	1.70
		For test plugs DIA 4 mm 0.157 in			TP4	1SNK900205R0000		20	2.40
7	**Test connectors**	5.2 mm 0.205 in spacing		Dark grey	TC5	1SNK900200R0000		10	5.20
		End module, 5.2 mm 0.205 in			TC5-R1	1SNK900201R0000		10	5.20
8	**Terminal block markers**	Blank marker		White	MG-CPM 13 41790	1SNB041790R0512		1960	0.23
		Blank card			MC512	1SNK140000R0000		22	9.00
					MC512PA	1SNK149999R0000		20	10.00
		Universal wire markers holder		Grey	UMH	1SNK900611R0000		10	0.20

Complete list of accessories is indicated in the terminal block datasheet including end stops.
Some accessories such as jumper bars may modify the terminal block's ratings: Complete information available in the accessories section of the catalog.

Ground PI-Spring terminal blocks

Description		Color	Type	Part Number		Pkg qty	Weight (1 pce) g
Ground	Profile aligned with ZK2.5-3P	Green-yellow	ZK2.5-PE-3P	1SNK705151R0000		20	11.90

1SNK162024S0201

Technical data valid for copper conductors only.

ZK2.5-4P PI-Spring terminal blocks

Feed-through with 4 connections - 5.2 mm 0.205 in spacing

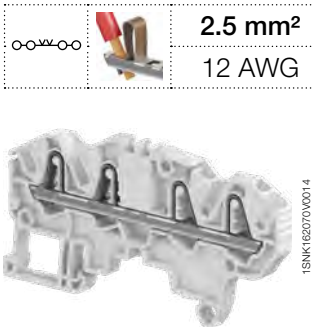

ZK2.5-4P

2.5 mm²
12 AWG

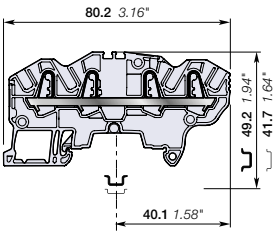

5.2 mm 0.205 in spacing

Description

Find all the features of the ZK2.5 terminal block with the added option of distributing or branching 4 conductors.

Ordering details

Description		Color	Type	Part Number		Pkg qty	Weight (1 pce) g
Feed-through	4 connections	Grey	ZK2.5-4P	1SNK705012R0000		50	9.00
		Blue	ZK2.5-4P-BL	1SNK705022R0000		50	9.00
		Orange	ZK2.5-4P-OR	1SNK705032R0000		50	9.00
		Yellow	ZK2.5-4P-YL	1SNK705074R0000		50	9.00
		Green	ZK2.5-4P-GN	1SNK705075R0000		50	9.00
		Red	ZK2.5-4P-RD	1SNK705076R0000		50	9.00
		White	ZK2.5-4P-WH	1SNK705079R0000		50	9.00
		Black	ZK2.5-4P-BK	1SNK705080R0000		50	9.00

Main technical data

Connecting capacity		IEC	UL - CSA
1 conductor per clamp	Rigid: Solid/Stranded	0.2 ... 4 mm²	26 ... 12 AWG
	Flexible without ferrule	0.22 ... 2.5 mm²	
	Flexible with non insulated ferrule	0.22 ... 2.5 mm²	26 ... 14 AWG
	Flexible with insulated ferrule	0.22 ... 2.5 mm²	26 ... 14 AWG
2 conductors per clamp	Flexible with twin ferrule	0.22 ... 0.5 mm²	26 ... 20 AWG
Rated current / Rated cross section		24 A / 2.5 mm²	20 A / 12 AWG
Rated short-time withstand current (1s)		300 A	396 A
Short Circuit Current Rating (with specific conditions)			100 kA
Rated voltage		1000 V	600 V
Impulse withstand voltage		8000 V	
Protection		IP20	NEMA 1
Increased safety Ex e		693 V 21 A IEC/EN 60079-7 - IM2 II 2 GD Ex eb I/IIC/IIIC	

Mounting instructions

Rail	TH 35-7.5, TH 35-15
Wire stripping length	11 mm 0.433 in
Tool (for flexible conductor without ferrule)	Flat screwdriver Ø 3.5 mm Ø 0.138 in

The connecting capacity data for one Rigid: Solid/Stranded, or one Flexible conductor (when applicable) is a mandatory information required by IEC, UL and CSA standards (Copper conductors). All other data are provided as supplementary information only. For more details, please consult our CB, UL or CSA certificates and technical datasheet available on http://www.TE.com

CE, CB, RoHS, USR CNR, CSA, EAC Ex, ATEX, IECEx, Haz Loc, BV, DNV

Accessories

	Description			Color	Type	Part Number		Pkg qty	Weight (1 pce) g
1	**End stops**	5.2 mm	0.205 in	Dark grey	BAZ1	1SNK900002R0000		50	5.30
2	**End sections**	2 mm	0.079 in	Dark grey	EK2.5-4P	1SNK705912R0000		20	2.70
3	**Jumper bars**	2 poles	32 A (IEC)	Orange	JB5-2	1SNK905302R0000		50	1.30
		3 poles	32 A (IEC)		JB5-3	1SNK905303R0000		50	2.00
		4 poles	32 A (IEC)		JB5-4	1SNK905304R0000		50	2.70
		5 poles	32 A (IEC)		JB5-5	1SNK905305R0000		50	3.50
		10 poles	32 A (IEC)		JB5-10	1SNK905310R0000		30	7.10
		50 poles	32 A (IEC)		JB5-50	1SNK905350R0000		10	36.00
4	**Cross spacing jumpers**	3 poles	32 A (IEC)	Orange	JB85-3	1SNK900603R0000		10	2.80
5	**Circuit separators**	3 mm	0.118 in	Dark grey	CS-R3	1SNK900107R0000		20	6.40
6	**Test adapters**	For test plugs DIA 2 mm 0.079 in		Dark grey	TP2	1SNK900203R0000		20	1.70
		For test plugs DIA 4 mm 0.157 in			TP4	1SNK900205R0000		20	2.40
7	**Test connectors**	5.2 mm 0.205 in spacing		Dark grey	TC5	1SNK900200R0000		10	5.20
		End module, 5.2 mm 0.205 in			TC5-R1	1SNK900201R0000		10	5.20
8	**Terminal block markers**	Blank marker		White	MG-CPM 13 41790	1SNB041790R0512		1960	0.23
		Blank card			MC512	1SNK140000R0000		22	9.00
					MC512PA	1SNK149999R0000		20	10.00
		Universal wire markers holder		Grey	UMH	1SNK900611R0000		10	0.20

Complete list of accessories is indicated in the terminal block datasheet including end stops.
Some accessories such as jumper bars may modify the terminal block's ratings: Complete information available in the accessories section of the catalog.

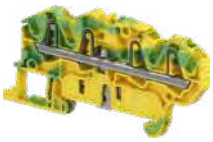

Ground PI-Spring terminal blocks

Description		Color	Type	Part Number		Pkg qty	Weight (1 pce) g
Ground	Profile aligned with ZK2.5-4P	Green-yellow	ZK2.5-PE-4P	1SNK705152R0000		20	13.60

1SNK162025S0201

Technical data valid for copper conductors only.

ZK4 PI-Spring terminal blocks
Feed-through - 6 mm 0.236 in spacing

ZK4

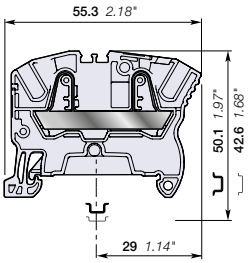

6 mm 0.236 in spacing

4 mm²
10 AWG

Description

Combine high performance with compact dimensions:
- 1000 V AC / DC IEC 600 V UL,
- Opt for the best marking visibility thanks to the up-front, flat marker zone, which lets you mark up to eight digits or increase the font size.

Ordering details

Description		Color	Type	Part Number		Pkg qty	Weight (1 pce) g
Feed-through	2 connections	Grey	ZK4	1SNK706010R0000		50	7.90
		Blue	ZK4-BL	1SNK706020R0000		50	7.90
		Orange	ZK4-OR	1SNK706030R0000		50	7.90
		Yellow	ZK4-YL	1SNK706060R0000		50	7.90
		Red	ZK4-RD	1SNK706062R0000		50	7.90
		Black	ZK4-BK	1SNK706066R0000		50	7.90

Main technical data

Connecting capacity		IEC	UL - CSA
1 conductor per clamp	Rigid: Solid/Stranded	0.5 ... 6 mm²	26 ... 10 AWG
	Flexible without ferrule	0.5 ... 4 mm²	
	Flexible with non insulated ferrule	0.5 ... 4 mm²	26 ... 12 AWG
	Flexible with insulated ferrule	0.5 ... 4 mm²	26 ... 12 AWG
2 conductors per clamp	Flexible with twin ferrule	0.5 ... 1 mm²	26 ... 18 AWG
Rated current / Rated cross section		32 A / 4 mm²	30 A / 10 AWG
Rated short-time withstand current (1s)		480 A	636 A
Short Circuit Current Rating (with specific conditions)			100 kA
Rated voltage		1000 V	600 V
Impulse withstand voltage		8000 V	
Protection		IP20	NEMA 1
Increased safety Ex e		693 V 29 A IEC/EN 60079-7 - IM2 II 2 GD Ex eb I/IIC/IIIC	

The connecting capacity data for one Rigid: Solid/Stranded, or one Flexible conductor (when applicable) is a mandatory information required by IEC, UL and CSA standards (Copper conductors). All other data are provided as supplementary information only. For more details, please consult our CB, UL or CSA certificates and technical datasheet available on http://www.TE.com

CE, CB, RoHS, USR CNR, CSA, EAC Ex, ATEX, IECEx, Haz Loc, BV, DNV

Mounting instructions

Rail	TH 35-7.5, TH 35-15
Wire stripping length	12.5 mm 0.492 in
Tool (for flexible conductor without ferrule)	Flat screwdriver Ø 3.5 mm Ø 0.138 in

Accessories

	Description			Color	Type	Part Number		Pkg qty	Weight (1 pce) g
1	**End stops**	5.2 mm	0.205 in	Dark grey	BAZ1	1SNK900002R0000		50	5.30
2	**End sections**	2 mm	0.079 in	Dark grey	EK2.5	1SNK705910R0000		20	1.80
3	**Jumper bars**	2 poles	41 A (IEC)	Orange	JB6-2	1SNK906302R0000		50	1.30
		3 poles	41 A (IEC)		JB6-3	1SNK906303R0000		50	2.10
		4 poles	41 A (IEC)		JB6-4	1SNK906304R0000		50	2.90
		5 poles	41 A (IEC)		JB6-5	1SNK906305R0000		50	3.60
		10 poles	41 A (IEC)		JB6-10	1SNK906310R0000		20	7.40
		50 poles	41 A (IEC)		JB6-50	1SNK906350R0000		10	38.10
4	**Cross spacing jumpers**	3 poles	32 A (IEC)	Orange	JB85-3	1SNK900603R0000		10	2.80
5	**Circuit separators**	3 mm	0.118 in	Dark grey	CS-R2	1SNK900106R0000		20	3.80
6	**Test adapters**	For test plugs DIA 2 mm 0.079 in		Dark grey	TP2	1SNK900203R0000		20	1.70
		For test plugs DIA 4 mm 0.157 in			TP4	1SNK900205R0000		20	2.40
7	**Test connectors**	End module, 5.2 mm 0.205 in		Dark grey	TC5-R1	1SNK900201R0000		10	5.20
8	**Spacers**	0.8 mm	0.031 in	Dark grey	ES-TC6	1SNK900105R0000		10	0.80
9	**Terminal block markers**	Blank marker		White	MG-CPM 13 41791	1SNB041791R0612		1680	0.27
		Blank card			MC612	1SNK150000R0000		22	10.00
					MC612PA	1SNK159999R0000		20	11.00
		Universal wire markers holder		Grey	UMH	1SNK900611R0000		10	0.20

Complete list of accessories is indicated in the terminal block datasheet including end stops.
Some accessories such as jumper bars may modify the terminal block's ratings: Complete information available in the accessories section of the catalog.

Ground PI-Spring terminal blocks

Description		Color	Type	Part Number		Pkg qty	Weight (1 pce) g
Ground	Profile aligned with ZK4	Green-yellow	ZK4-PE	1SNK706150R0000		20	12.60

1SNK162026S0201

Technical data valid for copper conductors only.

ZK4-3P PI-Spring terminal blocks

Feed-through with 3 connections - 6 mm 0.236 in spacing

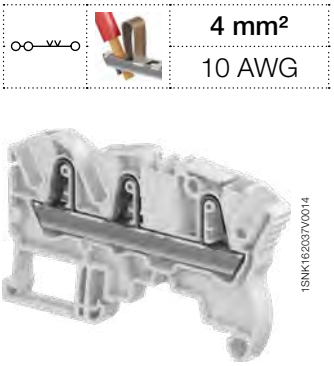

4 mm²	
10 AWG	

1SNK162037V0014

ZK4-3P

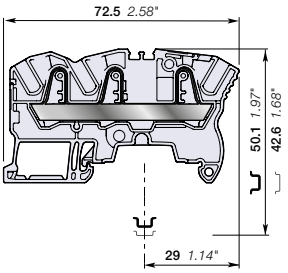

6 mm 0.236 in spacing

Description

Find all the features of the ZK4 terminal block with the added option of distributing or branching 3 conductors.

Ordering details

Description		Color	Type	Part Number		Pkg qty	Weight (1 pce) g
Feed-through	3 connections	Grey	ZK4-3P	1SNK706011R0000		50	11.00
		Blue	ZK4-3P-BL	1SNK706021R0000		50	11.00
		Orange	ZK4-3P-OR	1SNK706031R0000		50	11.00

Main technical data

Connecting capacity		IEC	UL - CSA
1 conductor per clamp	Rigid: Solid/Stranded	0.5 ... 6 mm²	26 ... 10 AWG
	Flexible without ferrule	0.5 ... 4 mm²	
	Flexible with non insulated ferrule	0.5 ... 4 mm²	26 ... 12 AWG
	Flexible with insulated ferrule	0.5 ... 4 mm²	26 ... 12 AWG
2 conductors per clamp	Flexible with twin ferrule	0.5 ... 1 mm²	26 ... 18 AWG
Rated current / Rated cross section		32 A / 4 mm²	30 A / 10 AWG
Rated short-time withstand current (1s)		480 A	636 A
Short Circuit Current Rating (with specific conditions)			100 kA
Rated voltage		1000 V	600 V
Impulse withstand voltage		8000 V	
Protection		IP20	NEMA 1
Increased safety Ex e		693 V 29 A IEC/EN 60079-7 - IM2 II 2 GD Ex eb I/IIC/IIIC	

Mounting instructions

Rail	TH 35-7.5, TH 35-15
Wire stripping length	12.5 mm 0.492 in
Tool (for flexible conductor without ferrule)	Flat screwdriver Ø 3.5 mm Ø 0.138 in

The connecting capacity data for one Rigid: Solid/Stranded, or one Flexible conductor (when applicable) is a mandatory information required by IEC, UL and CSA standards (Copper conductors). All other data are provided as supplementary information only. For more details, please consult our CB, UL or CSA certificates and technical datasheet available on http://www.TE.com

CE, CB, RoHS, USR CNR, CSA, EAC Ex, ATEX, IECEx, Haz Loc, BV, DNV

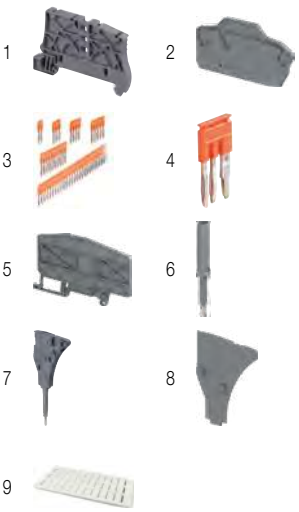

Accessories

	Description			Color	Type	Part Number		Pkg qty	Weight (1 pce) g
1	**End stops**	5.2 mm	0.205 in	Dark grey	BAZ1	1SNK900002R0000		50	5.30
2	**End sections**	2 mm	0.079 in	Dark grey	EK2.5-3P	1SNK705911R0000		20	2.40
3	**Jumper bars**	2 poles	41 A (IEC)	Orange	JB6-2	1SNK906302R0000		50	1.30
		3 poles	41 A (IEC)		JB6-3	1SNK906303R0000		50	2.10
		4 poles	41 A (IEC)		JB6-4	1SNK906304R0000		50	2.90
		5 poles	41 A (IEC)		JB6-5	1SNK906305R0000		50	3.60
		10 poles	41 A (IEC)		JB6-10	1SNK906310R0000		20	7.40
		50 poles	41 A (IEC)		JB6-50	1SNK906350R0000		10	38.10
4	**Cross spacing jumpers**	3 poles	32 A (IEC)	Orange	JB85-3	1SNK900603R0000		10	2.80
5	**Circuit separators**	3 mm	0.118 in	Dark grey	CS-R3	1SNK900107R0000		20	6.40
6	**Test adapters**	For test plugs DIA 2 mm 0.079 in		Dark grey	TP2	1SNK900203R0000		20	1.70
		For test plugs DIA 4 mm 0.157 in			TP4	1SNK900205R0000		20	2.40
7	**Test connectors**	End module, 5.2 mm 0.205 in		Dark grey	TC5-R1	1SNK900201R0000		10	5.20
8	**Spacers**	0.8 mm	0.031 in	Dark grey	ES-TC6	1SNK900105R0000		10	0.80
9	**Terminal block markers**	Blank marker		White	MG-CPM 13 41791	1SNB041791R0612		1680	0.27
		Blank card			MC612	1SNK150000R0000		22	10.00
					MC612PA	1SNK159999R0000		20	11.00
		Universal wire markers holder		Grey	UMH	1SNK900611R0000		10	0.20

Complete list of accessories is indicated in the terminal block datasheet including end stops.
Some accessories such as jumper bars may modify the terminal block's ratings: Complete information available in the accessories section of the catalog.

Ground PI-Spring terminal blocks

Description		Color	Type	Part Number		Pkg qty	Weight (1 pce) g
Ground	Profile aligned with ZK4-3P	Green-yellow	ZK4-PE-3P	1SNK706151R0000		20	15.70

1SNK162027S0201

Technical data valid for copper conductors only.

ZK4-4P PI-Spring terminal blocks

Feed-through with 4 connections - 6 mm 0.236 in spacing

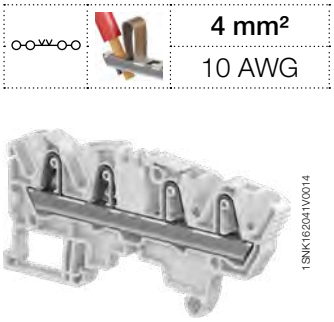

ZK4-4P

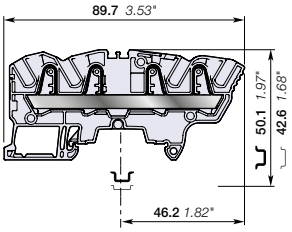

6 mm 0.236 in spacing

4 mm²
10 AWG

Description

Find all the features of the ZK4 terminal block with the added option of distributing or branching 4 conductors.

Ordering details

Description		Color	Type	Part Number		Pkg qty	Weight (1 pce) g
Feed-through	4 connections	Grey	ZK4-4P	1SNK706012R0000		50	13.80
		Blue	ZK4-4P-BL	1SNK706022R0000		50	13.80
		Orange	ZK4-4P-OR	1SNK706032R0000		50	13.80

Main technical data

Connecting capacity		IEC	UL - CSA
1 conductor per clamp	Rigid: Solid/Stranded	0.5 ... 6 mm²	26 ... 10 AWG
	Flexible without ferrule	0.5 ... 4 mm²	
	Flexible with non insulated ferrule	0.5 ... 4 mm²	26 ... 12 AWG
	Flexible with insulated ferrule	0.5 ... 4 mm²	26 ... 12 AWG
2 conductors per clamp	Flexible with twin ferrule	0.5 ... 1 mm²	26 ... 18 AWG
Rated current / Rated cross section		32 A / 4 mm²	30 A / 10 AWG
Rated short-time withstand current (1s)		480 A	636 A
Short Circuit Current Rating (with specific conditions)			100 kA
Rated voltage		1000 V	600 V
Impulse withstand voltage		8000 V	
Protection		IP20	NEMA 1
Increased safety Ex e		693 V 29 A IEC/EN 60079-7 - IM2 II 2 GD Ex eb I/IIC/IIIC	

Mounting instructions

Rail		TH 35-7.5, TH 35-15
Wire stripping length		12.5 mm 0.492 in
Tool (for flexible conductor without ferrule)		Flat screwdriver Ø 3.5 mm Ø 0.138 in

The connecting capacity data for one Rigid: Solid/Stranded, or one Flexible conductor (when applicable) is a mandatory information required by IEC, UL and CSA standards (Copper conductors). All other data are provided as supplementary information only. For more details, please consult our CB, UL or CSA certificates and technical datasheet available on http://www.TE.com

CE, CB, RoHS, USR CNR, CSA, EAC Ex, ATEX, IECEx, Haz Loc, BV, DNV

Accessories

	Description			Color	Type	Part Number		Pkg qty	Weight (1 pce) g
1	**End stops**	5.2 mm	0.205 in	Dark grey	BAZ1	1SNK900002R0000		50	5.30
2	**End sections**	2 mm	0.079 in	Dark grey	EK2.5-4P	1SNK705912R0000		20	2.70
3	**Jumper bars**	2 poles	41 A (IEC)	Orange	JB6-2	1SNK906302R0000		50	1.30
		3 poles	41 A (IEC)		JB6-3	1SNK906303R0000		50	2.10
		4 poles	41 A (IEC)		JB6-4	1SNK906304R0000		50	2.90
		5 poles	41 A (IEC)		JB6-5	1SNK906305R0000		50	3.60
		10 poles	41 A (IEC)		JB6-10	1SNK906310R0000		20	7.40
		50 poles	41 A (IEC)		JB6-50	1SNK906350R0000		10	38.10
4	**Cross spacing jumpers**	3 poles	32 A (IEC)	Orange	JB85-3	1SNK900603R0000		10	2.80
5	**Circuit separators**	3 mm	0.118 in	Dark grey	CS-R3	1SNK900107R0000		20	6.40
6	**Test adapters**	For test plugs DIA 2 mm 0.079 in		Dark grey	TP2	1SNK900203R0000		20	1.70
		For test plugs DIA 4 mm 0.157 in			TP4	1SNK900205R0000		20	2.40
7	**Test connectors**	End module, 5.2 mm 0.205 in		Dark grey	TC5-R1	1SNK900201R0000		10	5.20
8	**Spacers**	0.8 mm	0.031 in	Dark grey	ES-TC6	1SNK900105R0000		10	0.80
9	**Terminal block markers**	Blank marker		White	MG-CPM 13 41791	1SNB041791R0612		1680	0.27
		Blank card			MC612	1SNK150000R0000		22	10.00
					MC612PA	1SNK159999R0000		20	11.00
		Universal wire markers holder		Grey	UMH	1SNK900611R0000		10	0.20

Complete list of accessories is indicated in the terminal block datasheet including end stops.
Some accessories such as jumper bars may modify the terminal block's ratings: Complete information available in the accessories section of the catalog.

Ground PI-Spring terminal blocks

Description		Color	Type	Part Number		Pkg qty	Weight (1 pce) g
Ground	Profile aligned with ZK4-4P	Green-yellow	ZK4-PE-4P	1SNK706152R0000		20	18.40

1SNK162028S0201

Technical data valid for copper conductors only.

ZK6 PI-Spring terminal blocks
Feed-through - 8 mm 0.315 in spacing

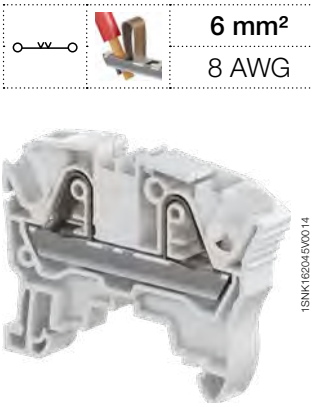

6 mm²
8 AWG

1SNK162045V0014

ZK6

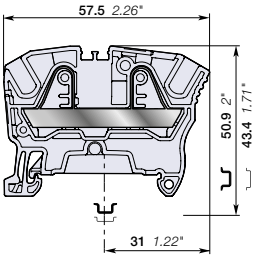

8 mm 0.315 in spacing

Description

Combine high performance with compact dimensions:
- 1000 V AC / DC IEC 600 V UL,
- Opt for the best marking visibility thanks to the up-front, flat marker zone, which lets you mark up to eight digits or increase the font size.

Ordering details

Description		Color	Type	Part Number		Pkg qty	Weight (1 pce) g
Feed-through	2 connections	Grey	ZK6	1SNK708010R0000		50	11.80
		Blue	ZK6-BL	1SNK708020R0000		50	11.80
		Orange	ZK6-OR	1SNK708030R0000		50	11.80
		Yellow	ZK6-YL	1SNK708060R0000		50	11.80
		Red	ZK6-RD	1SNK708062R0000		50	11.80
		Black	ZK6-BK	1SNK708066R0000		50	11.80

Main technical data

Connecting capacity		IEC	UL - CSA
1 conductor per clamp	Rigid: Solid/Stranded	0.5 ... 10 mm²	24 ... 8 AWG
	Flexible without ferrule	0.5 ... 6 mm²	
	Flexible with non insulated ferrule	0.5 ... 6 mm²	24 ... 10 AWG
	Flexible with insulated ferrule	0.5 ... 6 mm²	24 ... 10 AWG
2 conductors per clamp	Flexible with twin ferrule	0.5 ... 1.5 mm²	24 ... 16 AWG
Rated current / Rated cross section		41 A / 6 mm²	50 A / 8 AWG
Rated short-time withstand current (1s)		720 A	1008 A
Short Circuit Current Rating (with specific conditions)			100 kA
Rated voltage		1000 V	600 V
Impulse withstand voltage		8000 V	
Protection		IP20	NEMA 1
Increased safety Ex e		693 V 37 A IEC/EN 60079-7 - IM2 II 2 GD Ex eb I/IIC/IIIC	

The connecting capacity data for one Rigid: Solid/Stranded, or one Flexible conductor (when applicable) is a mandatory information required by IEC, UL and CSA standards (Copper conductors). All other data are provided as supplementary information only. For more details, please consult our CB, UL or CSA certificates and technical datasheet available on http://www.TE.com

CE, CB, RoHS, USR CNR, CSA, EAC Ex, ATEX, IECEx, Haz Loc, BV, DNV

Mounting instructions

Rail		TH 35-7.5, TH 35-15
Wire stripping length		12.5 mm 0.492 in
Tool (for flexible conductor without ferrule)		Flat screwdriver Ø 3.5 mm Ø 0.138 in

Accessories

	Description			Color	Type	Part Number		Pkg qty	Weight (1 pce) g
1	**End stops**	5.2 mm	0.205 in	Dark grey	BAZ1	1SNK900002R0000		50	5.30
2	**End sections**	2 mm	0.079 in	Dark grey	EK2.5	1SNK705910R0000		20	1.80
3	**Jumper bars**	2 poles	57 A (IEC)	Orange	JB8-2	1SNK908302R0000		50	2.70
		3 poles	57 A (IEC)		JB8-3	1SNK908303R0000		50	4.10
		4 poles	57 A (IEC)		JB8-4	1SNK908304R0000		50	5.60
		5 poles	57 A (IEC)		JB8-5	1SNK908305R0000		40	7.00
		10 poles	57 A (IEC)		JB8-10	1SNK908310R0000		20	14.20
4	**Cross spacing jumpers**	3 poles	32 A (IEC)	Orange	JB85-3	1SNK900603R0000		10	2.80
5	**Circuit separators**	3 mm	0.118 in	Dark grey	CS-R2	1SNK900106R0000		20	3.80
6	**Test adapters**	For test plugs DIA 2 mm 0.079 in		Dark grey	TP2	1SNK900203R0000		20	1.70
		For test plugs DIA 4 mm 0.157 in			TP4	1SNK900205R0000		20	2.40
7	**Test connectors**	End module, 5.2 mm 0.205 in		Dark grey	TC5-R1	1SNK900201R0000		10	5.20
8	**Spacers**	2.8 mm	0.110 in	Dark grey	ES-TC8	1SNK900104R0000		10	1.40
9	**Terminal block markers**	Blank marker		White	MG-CPM 13 41791	1SNB041791R0612		1680	0.27
		Blank card			MC812	1SNK160000R0000		22	10.00
					MC812PA	1SNK169999R0000		20	14.00
		Universal wire markers holder		Grey	UMH	1SNK900611R0000		10	0.20

Complete list of accessories is indicated in the terminal block datasheet including end stops.
Some accessories such as jumper bars may modify the terminal block's ratings: Complete information available in the accessories section of the catalog.

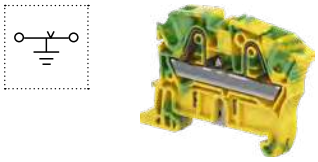

Ground PI-Spring terminal blocks

Description		Color	Type	Part Number		Pkg qty	Weight (1 pce) g
Ground	Profile aligned with ZK6	Green-yellow	ZK6-PE	1SNK708150R0000		20	20.30

1SNK162029S0201

Technical data valid for copper conductors only.

ZK6-3P PI-Spring terminal blocks

Feed-through with 3 connections - 8 mm 0.315 in spacing

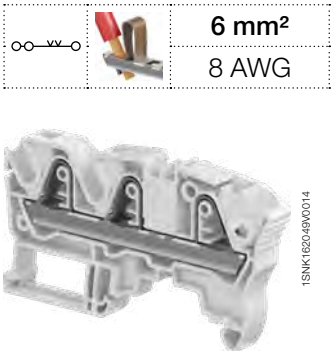

1SNK162049V0014

ZK6-3P

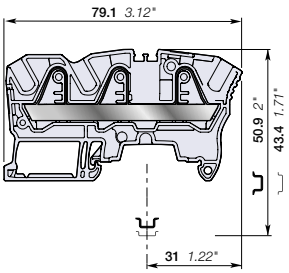

8 mm 0.315 in spacing

	6 mm²
	8 AWG

Description

Find all the features of the ZK6 terminal block with the added option of distributing or branching 3 conductors.

Ordering details

Description		Color	Type	Part Number		Pkg qty	Weight (1 pce) g
Feed-through	3 connections	Grey	ZK6-3P	1SNK708011R0000		50	16.70
		Blue	ZK6-3P-BL	1SNK708021R0000		50	16.70
		Orange	ZK6-3P-OR	1SNK708031R0000		50	16.70

Main technical data

Connecting capacity		IEC	UL - CSA
1 conductor per clamp	Rigid: Solid/Stranded	0.5 ... 10 mm²	24 ... 8 AWG
	Flexible without ferrule	0.5 ... 6 mm²	
	Flexible with non insulated ferrule	0.5 ... 6 mm²	24 ... 10 AWG
	Flexible with insulated ferrule	0.5 ... 6 mm²	24 ... 10 AWG
2 conductors per clamp	Flexible with twin ferrule	0.5 ... 1.5 mm²	24 ... 16 AWG
Rated current / Rated cross section		41 A / 6 mm²	50 A / 8 AWG
Rated short-time withstand current (1s)		720 A	1008 A
Short Circuit Current Rating (with specific conditions)			100 kA
Rated voltage		1000 V	600 V
Impulse withstand voltage		8000 V	
Protection		IP20	NEMA 1
Increased safety Ex e		693 V 37 A IEC/EN 60079-7 - IM2 II 2 GD Ex eb I/IIC/IIIC	

Mounting instructions

Rail		TH 35-7.5, TH 35-15
Wire stripping length		12.5 mm 0.492 in
Tool (for flexible conductor without ferrule)		Flat screwdriver Ø 3.5 mm Ø 0.138 in

The connecting capacity data for one Rigid: Solid/Stranded, or one Flexible conductor (when applicable) is a mandatory information required by IEC, UL and CSA standards (Copper conductors). All other data are provided as supplementary information only. For more details, please consult our CB, UL or CSA certificates and technical datasheet available on http://www.TE.com

CE, CB, RoHS, USR CNR, CSA, EAC Ex, ATEX, IECEx, Haz Loc, BV, DNV

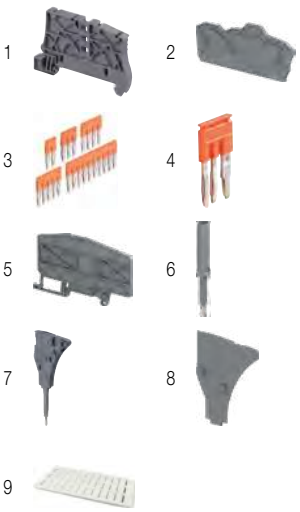

Accessories

	Description			Color	Type	Part Number		Pkg qty	Weight (1 pce) g
1	**End stops**	5.2 mm	0.205 in	Dark grey	BAZ1	1SNK900002R0000		50	5.30
2	**End sections**	2 mm	0.079 in	Dark grey	EK6-3P	1SNK708911R0000		20	2.80
3	**Jumper bars**	2 poles	57 A (IEC)	Orange	JB8-2	1SNK908302R0000		50	2.70
		3 poles	57 A (IEC)		JB8-3	1SNK908303R0000		50	4.10
		4 poles	57 A (IEC)		JB8-4	1SNK908304R0000		50	5.60
		5 poles	57 A (IEC)		JB8-5	1SNK908305R0000		40	7.00
		10 poles	57 A (IEC)		JB8-10	1SNK908310R0000		20	14.20
4	**Cross spacing jumpers**	3 poles	32 A (IEC)	Orange	JB85-3	1SNK900603R0000		10	2.80
5	**Circuit separators**	3 mm	0.118 in	Dark grey	CS-R3	1SNK900107R0000		20	6.40
6	**Test adapters**	For test plugs DIA 2 mm 0.079 in		Dark grey	TP2	1SNK900203R0000		20	1.70
		For test plugs DIA 4 mm 0.157 in			TP4	1SNK900205R0000		20	2.40
7	**Test connectors**	End module, 5.2 mm 0.205 in		Dark grey	TC5-R1	1SNK900201R0000		10	5.20
8	**Spacers**	2.8 mm	0.110 in	Dark grey	ES-TC8	1SNK900104R0000		10	1.40
9	**Terminal block markers**	Blank marker		White	MG-CPM 13 41791	1SNB041791R0612		1680	0.27
		Blank card			MC812	1SNK160000R0000		22	10.00
					MC812PA	1SNK169999R0000		20	14.00
		Universal wire markers holder		Grey	UMH	1SNK900611R0000		10	0.20

Complete list of accessories is indicated in the terminal block datasheet including end stops.
Some accessories such as jumper bars may modify the terminal block's ratings: Complete information available in the accessories section of the catalog.

Ground PI-Spring terminal blocks

Description		Color	Type	Part Number		Pkg qty	Weight (1 pce) g
Ground	Profile aligned with ZK6-3P	Green-yellow	ZK6-PE-3P	1SNK708151R0000		20	21.50

1SNK162030S0201

Technical data valid for copper conductors only.

ZK10 PI-Spring terminal blocks
Feed-through - 10 mm 0.394 in spacing

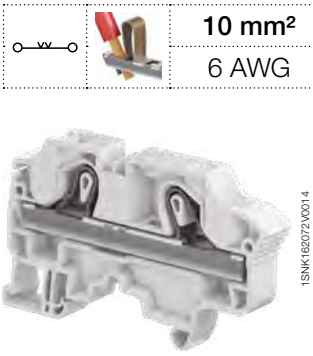

ZK10

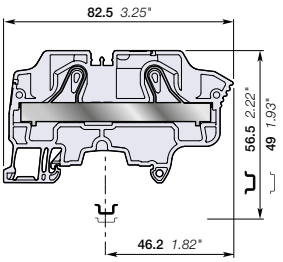

10 mm 0.394 in spacing

10 mm²
6 AWG

Description

Combine high performance with compact dimensions:
- 1000 V AC / DC IEC 600 V UL,
- Opt for the best marking visibility thanks to the up-front, flat marker zone, which lets you mark up to eight digits or increase the font size.

Ordering details

Description		Color	Type	Part Number		Pkg qty	Weight (1 pce) g
Feed-through	2 connections	Grey	ZK10	1SNK710010R0000		20	27.20
		Blue	ZK10-BL	1SNK710020R0000		20	27.20
		Orange	ZK10-OR	1SNK710030R0000		20	27.20

Main technical data

Connecting capacity		IEC	UL - CSA
1 conductor per clamp	Rigid: Solid/Stranded	0.5 ... 16 mm²	20 ... 6 AWG
	Flexible without ferrule	0.5 ... 10 mm²	
	Flexible with non insulated ferrule	0.5 ... 10 mm²	20 ... 8 AWG
	Flexible with insulated ferrule	0.5 ... 10 mm²	20 ... 8 AWG
2 conductors per clamp	Flexible with twin ferrule	0.5 ... 4 mm²	20 ... 12 AWG
Rated current / Rated cross section		57 A / 10 mm²	55 A / 6 AWG
Rated short-time withstand current (1s)		1200 A	1596 A
Short Circuit Current Rating (with specific conditions)			100 kA
Rated voltage		1000 V	600 V
Impulse withstand voltage		8000 V	
Protection		IP20	NEMA 1
Increased safety Ex e		693 V 51 A IEC/EN 60079-7 - IM2 II 2 GD Ex eb I/IIC/IIIC	

Mounting instructions

Rail		TH 35-7.5, TH 35-15
Wire stripping length		15 mm 0.591 in
Tool (for flexible conductor without ferrule)		Flat screwdriver Ø 4 mm Ø 0.157 in

The connecting capacity data for one Rigid: Solid/Stranded, or one Flexible conductor (when applicable) is a mandatory information required by IEC, UL and CSA standards (Copper conductors). All other data are provided as supplementary information only. For more details, please consult our CB, UL or CSA certificates and technical datasheet available on http://www.TE.com

CE, CB, RoHS, USR CNR, CSA, EAC Ex, ATEX, IECEx, Haz Loc, BV, DNV

Accessories

	Description			Color	Type	Part Number		Pkg qty	Weight (1 pce) g
1	**End stops**	5.2 mm	0.205 in	Dark grey	BAZ1	1SNK900002R0000		50	5.30
2	**End sections**	2 mm	0.079 in	Dark grey	EK10	1SNK710910R0000		20	3.30
3	**Jumper bars**	2 poles	76 A (IEC)	Orange	JB10-2	1SNK910302R0000		50	4.60
		3 poles	76 A (IEC)		JB10-3	1SNK910303R0000		50	7.10
		4 poles	76 A (IEC)		JB10-4	1SNK910304R0000		40	9.40
		5 poles	76 A (IEC)		JB10-5	1SNK910305R0000		30	12.00
		10 poles	76 A (IEC)		JB10-10	1SNK910310R0000		20	24.00
4	**Circuit separators**	3 mm	0.118 in	Dark grey	CS-R3	1SNK900107R0000		20	6.40
5	**Test adapters**	For test plugs DIA 2 mm 0.079 in		Dark grey	TP2	1SNK900203R0000		20	1.70
		For test plugs DIA 4 mm 0.157 in			TP4	1SNK900205R0000		20	2.40
6	**Terminal block markers**	Blank marker		White	MG-CPM 13 41791	1SNB041791R0612		1680	0.27
		Blank card			MC812	1SNK160000R0000		22	10.00
					MC812PA	1SNK169999R0000		20	14.00
		Universal wire markers holder		Grey	UMH	1SNK900611R0000		10	0.20

Complete list of accessories is indicated in the terminal block datasheet including end stops.
Some accessories such as jumper bars may modify the terminal block's ratings: Complete information available in the accessories section of the catalog.

Ground PI-Spring terminal blocks

Description		Color	Type	Part Number		Pkg qty	Weight (1 pce) g
Ground	Profile aligned with ZK10	Green-yellow	ZK10-PE	1SNK710150R0000		20	36.20

Technical data valid for copper conductors only.

1SNK162031S0201

ZK10-PV PI-Spring terminal blocks
Feed-through - 12 mm 0.472 in spacing

10 mm²
6 AWG

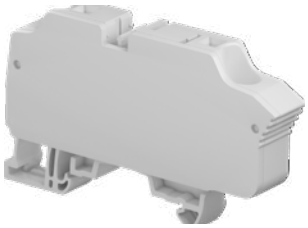
1SNK162124V0014

ZK10-PV

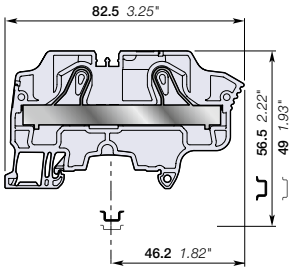

12 mm 0.472 in spacing

Description
Specially designed for high voltage utility scale solar power plants:
- Rated voltage of 1500 V DC IEC and 1000 V DC UL,
- Pre-mounted end section with light grey color specific to this application,
- Improved design with ribs to increase creepage distance,
- Compact solution only 2 mm thicker than normal product,
- Compatible with JB12 jumpers to interconnect multiple terminal blocks.

Ordering details

Description		Color	Type	Part Number		Pkg qty	Weight (1 pce) g
Feed-through	2 connections	Grey	ZK10-PV	1SNK710063R0000		20	29.86
		Blue	ZK10-PV-BL	1SNK710065R0000		20	29.86

Main technical data

Connecting capacity		IEC	UL - CSA
1 conductor per clamp	Rigid: Solid/Stranded	0.5 ... 16 mm²	20 ... 6 AWG
	Flexible without ferrule	0.5 ... 10 mm²	
	Flexible with non insulated ferrule	0.5 ... 10 mm²	20 ... 8 AWG
	Flexible with insulated ferrule	0.5 ... 10 mm²	20 ... 8 AWG
2 conductors per clamp	Flexible with twin ferrule	0.5 ... 4 AWG	20 ... 12 AWG
Rated current / Rated cross section		57 A / 10 mm²	55 A / 6 AWG
Rated short-time withstand current (1s)		1200 A	1596 A
Short Circuit Current Rating (with specific conditions)			100 kA
Rated voltage		1000 V AC / 1500 V DC	1000 V
Impulse withstand voltage		8000 V	
Protection		IP20	NEMA 1

Mounting instructions

Rail		TH 35-7.5, TH 35-15
Wire stripping length		15 mm 0.591 in
Tool (for flexible conductor without ferrule)		Flat screwdriver Ø 4 mm Ø 0.157 in

The connecting capacity data for one Rigid: Solid/Stranded, or one Flexible conductor (when applicable) is a mandatory information required by IEC, UL and CSA standards (Copper conductors). All other data are provided as supplementary information only. For more details, please consult our CB, UL or CSA certificates and technical datasheet available on http://www.TE.com

CE CB RoHS USR CNR CSA EAC

Accessories

	Description			Color	Type	Part Number		Pkg qty	Weight (1 pce) g
1	**End stops**	5.2 mm	0.205 in	Dark grey	BAZ1	1SNK900002R0000		50	5.30
2	**Jumper bars**	2 poles	76 A (IEC)	Orange	JB12-2	1SNK912302R0000		50	4.90
		3 poles	76 A (IEC)		JB12-3	1SNK912303R0000		50	7.60
		5 poles	76 A (IEC)		JB12-5	1SNK912305R0000		20	12.90
3	**Circuit separators**	3 mm	0.118 in	Dark grey	CS-R3	1SNK900107R0000		20	6.40
4	**Test adapters**	For test plugs DIA 2 mm 0.079 in		Dark grey	TP2	1SNK900203R0000		20	1.70
		For test plugs DIA 4 mm 0.157 in			TP4	1SNK900205R0000		20	2.40
5	**Terminal block markers**	Blank card		White	MC812	1SNK160000R0000		22	10.00
					MC812PA	1SNK169999R0000		20	14.00
		Blank marker			MG-CPM 13 41791	1SNB041791R0612		1680	0.273
		Universal wire markers holder		Grey	UMH	1SNK900611R0000		10	0.20

Complete list of accessories is indicated in the terminal block datasheet including end stops. Some accessories such as jumper bars may modify the terminal block's ratings: Complete information available in the accessories section of the catalog.

Ground PI-Spring terminal blocks

Description		Color	Type	Part Number		Pkg qty	Weight (1 pce) g
Ground	Profile aligned with ZK10	Green-yellow	ZK10-PE	1SNK710150R0000		20	36.20

1SNK162080S0201

Technical data valid for copper conductors only.

ZK10-3P PI-Spring terminal blocks

Feed-through with 3 connections - 10 mm 0.394 in spacing

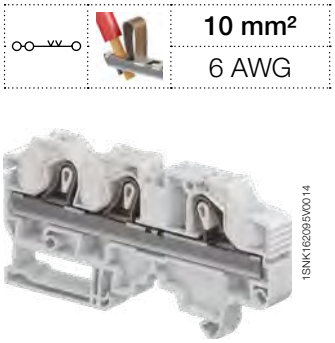

10 mm²
6 AWG

1SNK162095V0014

ZK10-3P

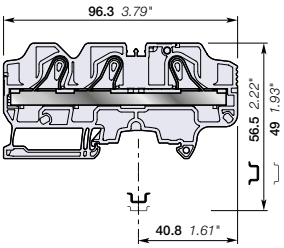

10 mm 0.394 in spacing

Description

- Find all the features of the ZK10 terminal block with the added option of distributing or branching 3 conductors,
- ZK10-3P is perfectly adapted to solar applications: 1250 V DC (1000 V AC) IEC, 1000 V UL.

Ordering details

Description		Color	Type	Part Number		Pkg qty	Weight (1 pce) g
Feed-through	3 connections	Grey	ZK10-3P	1SNK710011R0000		20	34.9
		Blue	ZK10-3P-BL	1SNK710021R0000		20	34.9

Main technical data

Connecting capacity		IEC	UL - CSA
1 conductor per clamp	Rigid: Solid/Stranded	0.5 ... 16 mm²	20 ... 6 AWG
	Flexible without ferrule	0.5 ... 10 mm²	
	Flexible with non insulated ferrule	0.5 ... 10 mm²	20 ... 8 AWG
	Flexible with insulated ferrule	0.5 ... 10 mm²	20 ... 8 AWG
2 conductors per clamp	Flexible with twin ferrule	0.5 ... 4 mm²	20 ... 12 AWG
Rated current / Rated cross section		57 A / 10 mm²	56 A / 6 AWG
Rated short-time withstand current (1s)		1200 A	
Short Circuit Current Rating (with specific conditions)			100 kA
Rated voltage		1000 V	1000 V
Impulse withstand voltage		8000 V	
Protection		IP20	NEMA 1
Increased safety Ex e		693 V 57 A - IM2 II 2 GD Ex eb I/II/IIIC	

Mounting instructions

Rail		TH 35-7.5, TH 35-15
Wire stripping length		15 mm 0.591 in
Tool (for flexible conductor without ferrule)		Flat screwdriver Ø 4 mm Ø 0.157 in

The connecting capacity data for one Rigid: Solid/Stranded, or one Flexible conductor (when applicable) is a mandatory information required by IEC, UL and CSA standards (Copper conductors).
All other data are provided as supplementary information only. For more details, please consult our CB, UL or CSA certificates and technical datasheet available on http://www.TE.com

CE, CB, RoHS, USR CNR, CSA, EAC Ex, ATEX, IECEx, BV

Accessories

	Description			Color	Type	Part Number		Pkg qty	Weight (1 pce) g
1	**End stops**	5.2 mm	0.205 in	Dark grey	BAZ1	1SNK900002R0000		50	5.30
2	**End sections**	2 mm	0.079 in	Dark grey	EK10-3P	1SNK710911R0000		20	4.5
3	**Jumper bars**	2 poles	76 A (IEC)	Orange	JB10-2	1SNK910302R0000		50	4.60
		3 poles	76 A (IEC)		JB10-3	1SNK910303R0000		50	7.10
		4 poles	76 A (IEC)		JB10-4	1SNK910304R0000		40	9.40
		5 poles	76 A (IEC)		JB10-5	1SNK910305R0000		30	12.00
		10 poles	76 A (IEC)		JB10-10	1SNK910310R0000		20	24.00
4	**Test adapters**	For test plugs DIA 2 mm 0.079 in		Dark grey	TP2	1SNK900203R0000		20	1.70
		For test plugs DIA 4 mm 0.157 in			TP4	1SNK900205R0000		20	2.40
5	**Terminal block markers**	Blank marker		White	MG-CPM 13 41791	1SNB041791R0612		1680	0.27
		Blank card			MC812	1SNK160000R0000		22	10.00
					MC812PA	1SNK169999R0000		20	14.00
		Universal wire markers holder		Grey	UMH	1SNK900611R0000		10	0.20

Complete list of accessories is indicated in the terminal block datasheet including end stops.
Some accessories such as jumper bars may modify the terminal block's ratings: Complete information available in the accessories section of the catalog.

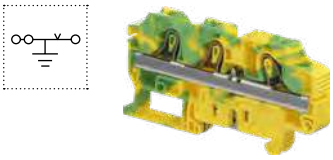

Ground PI-Spring terminal blocks

Description		Color	Type	Part Number		Pkg qty	Weight (1 pce) g
Ground	Profile aligned with ZK10-3P	Green-yellow	ZK10-PE-3P	1SNK710151R0000		20	43.3

1SNK162061S0201

Technical data valid for copper conductors only.

ZK10-3P-PV PI-Spring terminal blocks

Feed-through with 3 connections - 12 mm 0.472 in spacing

10 mm²

6 AWG

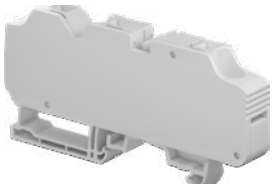

1SNK162126V0014

ZK10-3P-PV

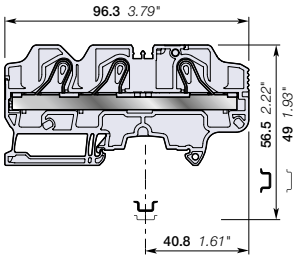

12 mm 0.472 in spacing

Description

Specially designed for high voltage utility scale solar power plants:

- Rated voltage of 1500 V DC IEC and 1000 V DC UL,
- Pre-mounted end section with light grey color specific to this application,
- Improved design with ribs to increase creepage distance,
- Compact solution only 2 mm thicker than normal product,
- 3 connections configuration for easy grouping: 2 inputs / 1 output or 1 input / 2 outputs,
- Compatible with JB12 jumpers to interconnect multiple terminal blocks.

Description		Color	Type	Part Number		Pkg qty	Weight (1 pce) g
Feed-through	3 connections	Grey	ZK10-3P-PV	1SNK710064R0000		20	38.61
		Blue	ZK10-3P-PV-BL	1SNK710067R0000		20	38.61

Main technical data

Connecting capacity		IEC	UL - CSA
1 conductor per clamp	Rigid: Solid/Stranded	0.5 ... 16 mm²	20 ... 6 AWG
	Flexible without ferrule	0.5 ... 10 mm²	
	Flexible with non insulated ferrule	0.5 ... 10 mm²	20 ... 8 AWG
	Flexible with insulated ferrule	0.5 ... 10 mm²	20 ... 8 AWG
2 conductors per clamp	Flexible with twin ferrule	0.5 ... 4 AWG	20 ... 12 AWG
Rated current / Rated cross section		57 A / 10 mm²	56 A / 6 AWG
Rated short-time withstand current (1s)		1200 A	1596 A
Short Circuit Current Rating (with specific conditions)			100 kA
Rated voltage		1000 V AC / 1500 V DC	1000 V
Impulse withstand voltage		8000 V	
Protection		IP20	NEMA 1

Mounting instructions

Rail		TH 35-7.5, TH 35-15
Wire stripping length		15 mm 0.591 in
Tool (for flexible conductor without ferrule)		Flat screwdriver Ø 4 mm Ø 0.157 in

The connecting capacity data for one Rigid: Solid/Stranded, or one Flexible conductor (when applicable) is a mandatory information required by IEC, UL and CSA standards (Copper conductors). All other data are provided as supplementary information only. For more details, please consult our CB, UL or CSA certificates and technical datasheet available on http://www.TE.com

CE CB RoHS USR CNR CSA EAC

Accessories

	Description			Color	Type	Part Number		Pkg qty	Weight (1 pce) g
1	End stops	5.2 mm	0.205 in	Dark grey	BAZ1	1SNK900002R0000		50	5.30
2	Jumper bars	2 poles	76 A (IEC)	Orange	JB12-2	1SNK912302R0000		50	4.90
		3 poles	76 A (IEC)		JB12-3	1SNK912303R0000		50	7.60
		5 poles	76 A (IEC)		JB12-5	1SNK912305R0000		20	12.90
3	Circuit separators	3 mm	0.118 in	Dark grey	CS-R3	1SNK900107R0000		20	6.40
4	Test adapters	For test plugs DIA 2 mm 0.079 in		Dark grey	TP2	1SNK900203R0000		20	1.70
		For test plugs DIA 4 mm 0.157 in			TP4	1SNK900205R0000		20	2.40
5	Terminal block markers	Blank card		White	MC812	1SNK160000R0000		22	10.00
					MC812PA	1SNK169999R0000		20	14.00
		Blank marker			MG-CPM 13 41791	1SNB041791R0612		1680	0.273
		Universal wire markers holder		Grey	UMH	1SNK900611R0000		10	0.20

Complete list of accessories is indicated in the terminal block datasheet including end stops. Some accessories such as jumper bars may modify the terminal block's ratings: Complete information available in the accessories section of the catalog.

Ground PI-Spring terminal blocks

Description		Color	Type	Part Number		Pkg qty	Weight (1 pce) g
Ground	Profile aligned with ZK10-3P	Green-yellow	ZK10-PE-3P	1SNK710151R0000		20	43.3

1SNK162081S0201

Technical data valid for copper conductors only.

ZK16 PI-Spring terminal blocks
Feed-through - 12 mm 0.472 in spacing

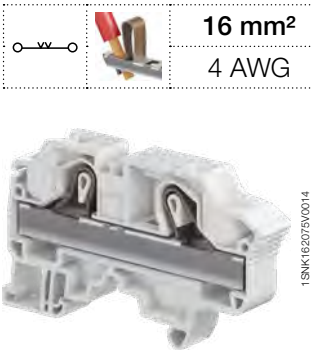

ZK16

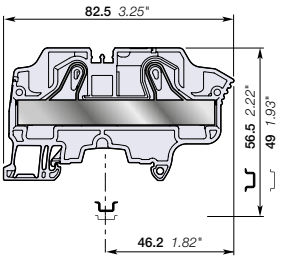

12 mm 0.472 in spacing

	16 mm²
	4 AWG

Description

Combine high performance with compact dimensions:
- 1000 V AC / DC IEC 600 V UL,
- Opt for the best marking visibility thanks to the up-front, flat marker zone, which lets you mark up to eight digits or increase the font size.

Ordering details

Description		Color	Type	Part Number		Pkg qty	Weight (1 pce) g
Feed-through	2 connections	Grey	ZK16	1SNK712010R0000		20	33.80
		Blue	ZK16-BL	1SNK712020R0000		20	33.80

Main technical data

Connecting capacity		IEC	UL - CSA
1 conductor per clamp	Rigid: Solid/Stranded	0.5 ... 25 mm²	20 ... 4 AWG
	Flexible without ferrule	0.5 ... 16 mm²	
	Flexible with non insulated ferrule	0.5 ... 16 mm²	20 ... 6 AWG
	Flexible with insulated ferrule	0.5 ... 16 mm²	20 ... 6 AWG
2 conductors per clamp	Flexible with twin ferrule	0.5 ... 6 mm²	20 ... 10 AWG
Rated current / Rated cross section		76 A / 16 mm²	75 A / 4 AWG
Rated short-time withstand current (1s)		1920 A	2544 A
Short Circuit Current Rating (with specific conditions)			100 kA
Rated voltage		1000 V	600 V
Impulse withstand voltage		8000 V	
Protection		IP20	NEMA 1
Increased safety Ex e		693 V 69 A IEC/EN 60079-7 - IM2 II 2 GD Ex eb I/IIC/IIIC	

The connecting capacity data for one Rigid: Solid/Stranded, or one Flexible conductor (when applicable) is a mandatory information required by IEC, UL and CSA standards (Copper conductors). All other data are provided as supplementary information only. For more details, please consult our CB, UL or CSA certificates and technical datasheet available on http://www.TE.com

CE, CB, RoHS, USR CNR, CSA, EAC Ex, ATEX, IECEx, Haz Loc, BV, DNV

Mounting instructions

Rail		TH 35-7.5, TH 35-15
Wire stripping length		15 mm 0.591 in
Tool (for flexible conductor without ferrule)		Flat screwdriver Ø 4 mm Ø 0.157 in

2

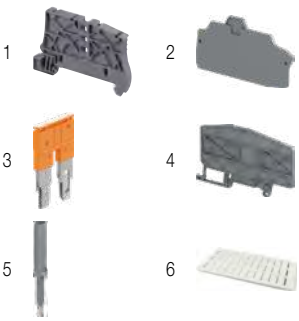

Accessories

	Description			Color	Type	Part Number		Pkg qty	Weight (1 pce) g
1	**End stops**	5.2 mm	0.205 in	Dark grey	BAZ1	1SNK900002R0000		50	5.30
2	**End sections**	2 mm	0.079 in	Dark grey	EK10	1SNK710910R0000		20	3.30
3	**Jumper bars**	2 poles	76 A (IEC)	Orange	JB12-2	1SNK912302R0000		50	4.90
		3 poles	76 A (IEC)		JB12-3	1SNK912303R0000		50	7.60
		5 poles	76 A (IEC)		JB12-5	1SNK912305R0000		20	12.90
4	**Circuit separators**	3 mm	0.118 in	Dark grey	CS-R3	1SNK900107R0000		20	6.40
5	**Test adapters**	For test plugs DIA 2 mm 0.079 in		Dark grey	TP2	1SNK900203R0000		20	1.70
		For test plugs DIA 4 mm 0.157 in			TP4	1SNK900205R0000		20	2.40
6	**Terminal block markers**	Blank marker		White	MG-CPM 13 41791	1SNB041791R0612		1680	0.27
		Blank card			MC812	1SNK160000R0000		22	10.00
					MC812PA	1SNK169999R0000		20	14.00
		Universal wire markers holder		Grey	UMH	1SNK900611R0000		10	0.20

Complete list of accessories is indicated in the terminal block datasheet including end stops.
Some accessories such as jumper bars may modify the terminal block's ratings: Complete information available in the accessories section of the catalog.

Ground PI-Spring terminal blocks

Description		Color	Type	Part Number		Pkg qty	Weight (1 pce) g
Ground	Profile aligned with ZK16	Green-yellow	ZK16-PE	1SNK712150R0000		20	47.00

1SNK162032S0201

Technical data valid for copper conductors only.

ZK16-PV PI-Spring terminal blocks
Feed-through - 14 mm 0.551 in spacing

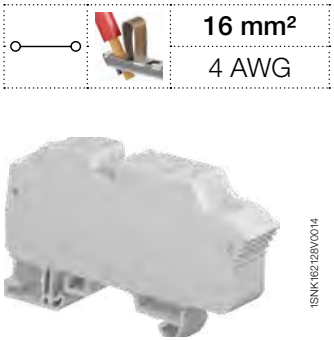

1SNK162128V0014

ZK16-PV

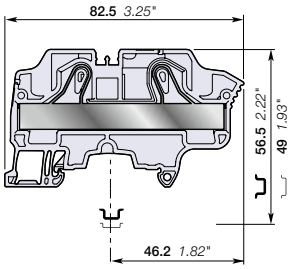

14 mm 0.551 in spacing

16 mm²
4 AWG

Description

Specially designed for high voltage utility scale solar power plants:
- Rated voltage of 1500 V DC IEC and 1000 V DC UL,
- Pre-mounted end section with light grey color specific to this application,
- Improved design with ribs to increase creepage distance,
- Compact solution only 2 mm thicker than normal product,
- No available jumpers for ZK16-PV and ZK16-3P-PV (14 mm spacing).

Ordering details

Description		Color	Type	Part Number		Pkg qty	Weight (1 pce) g
Feed-through	2 connections	Grey	ZK16-PV	1SNK712063R0000		15	36.56
		Blue	ZK16-PV-BL	1SNK712065R0000		15	36.56

Main technical data

Connecting capacity		IEC	UL - CSA
1 conductor per clamp	Rigid: Solid/Stranded	0.5 ... 25 mm²	20 ... 4 AWG
	Flexible without ferrule	0.5 ... 16 mm²	
	Flexible with non insulated ferrule	0.5 ... 16 mm²	20 ... 6 AWG
	Flexible with insulated ferrule	0.5 ... 16 mm²	20 ... 6 AWG
2 conductors per clamp	Flexible with twin ferrule	0.5 ... 6 AWG	20 ... 10 AWG
Rated current / Rated cross section		76 A / 16 mm²	75 A / 4 AWG
Rated short-time withstand current (1s)		1920 A	2544 A
Short Circuit Current Rating (with specific conditions)			100 kA
Rated voltage		1000 V AC / 1500 V DC	1000 V
Impulse withstand voltage		8000 V	
Protection		IP20	NEMA 1

Mounting instructions

Rail	TH 35-7.5, TH 35-15
Wire stripping length	15 mm 0.591 in
Tool (for flexible conductor without ferrule)	Flat screwdriver Ø 4 mm Ø 0.157 in

The connecting capacity data for one Rigid: Solid/Stranded, or one Flexible conductor (when applicable) is a mandatory information required by IEC, UL and CSA standards (Copper conductors). All other data are provided as supplementary information only. For more details, please consult our CB, UL or CSA certificates and technical datasheet available on http://www.TE.com

CE CB RoHS USR CNR CSA EAC

Accessories

	Description			Color	Type	Part Number		Pkg qty	Weight (1 pce) g
1	**End stops**	5.2 mm	0.205 in	Dark grey	BAZ1	1SNK900002R0000		50	5.30
2	**Circuit separators**	3 mm	0.118 in	Dark grey	CS-R3	1SNK900107R0000		20	6.40
3	**Test adapters**	For test plugs DIA 2 mm 0.079 in		Dark grey	TP2	1SNK900203R0000		20	1.70
		For test plugs DIA 4 mm 0.157 in			TP4	1SNK900205R0000		20	2.40
4	**Terminal block markers**	Blank card		White	MC812	1SNK160000R0000		22	10.00
					MC812PA	1SNK169999R0000		20	14.00
		Blank marker			MG-CPM 13 41791	1SNB041791R0612		1680	0.273
		Universal wire markers holder		Grey	UMH	1SNK900611R0000		10	0.20

Complete list of accessories is indicated in the terminal block datasheet including end stops. Some accessories such as jumper bars may modify the terminal block's ratings: Complete information available in the accessories section of the catalog.

Ground PI-Spring terminal blocks

Description		Color	Type	Part Number		Pkg qty	Weight (1 pce) g
Ground	Profile aligned with ZK16	Green-yellow	ZK16-PE	1SNK712150R0000		20	47.00

1SNK162082S0201

Technical data valid for copper conductors only.

ZK16-3P PI-Spring terminal blocks

Feed-through with 3 connections - 12 mm 0.472 in spacing

16 mm²
4 AWG

1SNK162098V0014

ZK16-3P

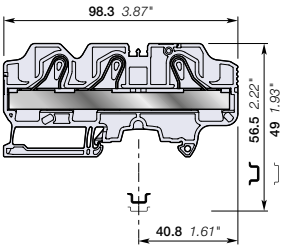

12 mm 0.472 in spacing

Description

- Find all the features of the ZK16 terminal block with the added option of distributing or branching 3 conductors,
- ZK16-3P is perfectly adapted to solar applications: 1250 V DC (1000 V AC) IEC, 1000 V UL.

Ordering details

Description		Color	Type	Part Number		Pkg qty	Weight (1 pce) g
Feed-through	3 connections	Grey	ZK16-3P	1SNK712011R0000		20	44.3
		Blue	ZK16-3P-BL	1SNK712021R0000		20	44.3

Main technical data

Connecting capacity		IEC	UL - CSA
1 conductor per clamp	Rigid: Solid/Stranded	0.5 ... 25 mm²	20 ... 4 AWG
	Flexible without ferrule	0.5 ... 16 mm²	
	Flexible with non insulated ferrule	0.5 ... 16 mm²	20 ... 6 AWG
	Flexible with insulated ferrule	0.5 ... 16 mm²	20 ... 6 AWG
2 conductors per clamp	Flexible with twin ferrule	0.5 ... 6 mm²	20 ... 10 AWG
Rated current / Rated cross section		76 A / 16 mm²	75 A / 4 AWG
Rated short-time withstand current (1s)		1920 A	
Short Circuit Current Rating (with specific conditions)			100 kA
Rated voltage		1000 V	1000 V
Impulse withstand voltage		8000 V	
Protection		IP20	NEMA 1
Increased safety Ex e		693 V 76 A - IM2 II 2 GD Ex eb I/II/IIIC	

Mounting instructions

Rail		TH 35-7.5, TH 35-15
Wire stripping length		15 mm 0.591 in
Tool (for flexible conductor without ferrule)		Flat screwdriver Ø 4 mm Ø 0.157 in

The connecting capacity data for one Rigid: Solid/Stranded, or one Flexible conductor (when applicable) is a mandatory information required by IEC, UL and CSA standards (Copper conductors). All other data are provided as supplementary information only. For more details, please consult our CB, UL or CSA certificates and technical datasheet available on http://www.TE.com

CE, CB, RoHS, USR CNR, CSA, EAC Ex, ATEX, IECEx, BV

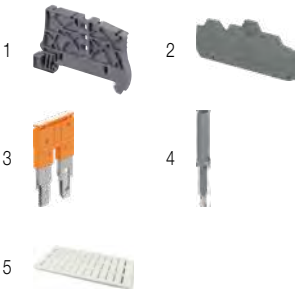

Accessories

	Description			Color	Type	Part Number		Pkg qty	Weight (1 pce) g
1	**End stops**	5.2 mm	0.205 in	Dark grey	BAZ1	1SNK900002R0000		50	5.30
2	**End sections**	2 mm	0.079 in	Dark grey	EK10-3P	1SNK710911R0000		20	4.5
3	**Jumper bars**	2 poles	76 A (IEC)	Orange	JB12-2	1SNK912302R0000		50	4.90
		3 poles	76 A (IEC)		JB12-3	1SNK912303R0000		50	7.60
		5 poles	76 A (IEC)		JB12-5	1SNK912305R0000		20	12.90
4	**Test adapters**	For test plugs DIA 2 mm 0.079 in		Dark grey	TP2	1SNK900203R0000		20	1.70
		For test plugs DIA 4 mm 0.157 in			TP4	1SNK900205R0000		20	2.40
5	**Terminal block markers**	Blank marker		White	MG-CPM 13 41791	1SNB041791R0612		1680	0.27
		Blank card			MC812	1SNK160000R0000		22	10.00
					MC812PA	1SNK169999R0000		20	14.00
		Universal wire markers holder		Grey	UMH	1SNK900611R0000		10	0.20

Complete list of accessories is indicated in the terminal block datasheet including end stops.
Some accessories such as jumper bars may modify the terminal block's ratings: Complete information available in the accessories section of the catalog.

Ground PI-Spring terminal blocks

Description		Color	Type	Part Number		Pkg qty	Weight (1 pce) g
Ground	Profile aligned with ZK16-3P	Green-yellow	ZK16-PE-3P	1SNK712151R0000		20	56.65

1SNK162063S0201

Technical data valid for copper conductors only.

ZK16-3P-PV PI-Spring terminal blocks

Feed-through with 3 connections - 14 mm 0.551 in spacing

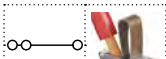

16 mm²
4 AWG

1SNK162130V0014

ZK16-3P-PV

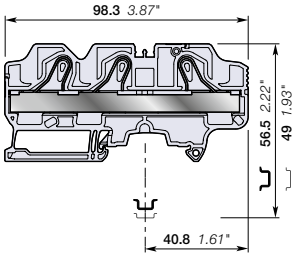

14 mm 0.551 in spacing

Description

Specially designed for high voltage utility scale solar power plants:
- Rated voltage of 1500 V DC IEC and 1000 V DC UL,
- Pre-mounted end section with light grey color specific to this application,
- Improved design with ribs to increase creepage distance,
- Compact solution only 2 mm thicker than normal product,
- 3 connections configuration for easy grouping: 2 inputs / 1 output or 1 input / 2 outputs,
- No available jumpers for ZK16-PV and ZK16-3P-PV (14 mm spacing).

Ordering details

Description		Color	Type	Part Number		Pkg qty	Weight (1 pce) g
Feed-through	3 connections	Grey	ZK16-3P-PV	1SNK712064R0000		15	48.01
		Blue	ZK16-3P-PV-BL	1SNK712067R0000		15	48.01

Main technical data

Connecting capacity		IEC	UL - CSA
1 conductor per clamp	Rigid: Solid/Stranded	0.5 ... 25 mm²	20 ... 4 AWG
	Flexible without ferrule	0.5 ... 16 mm²	
	Flexible with non insulated ferrule	0.5 ... 16 mm²	20 ... 6 AWG
	Flexible with insulated ferrule	0.5 ... 16 mm²	20 ... 6 AWG
2 conductors per clamp	Flexible with twin ferrule	0.5 ... 6 AWG	20 ... 10 AWG
Rated current / Rated cross section		76 A / 16 mm²	75 A / 4 AWG
Rated short-time withstand current (1s)		1920 A	2544 A
Short Circuit Current Rating (with specific conditions)			100 kA
Rated voltage		1000 V AC / 1500 V DC	1000 V
Impulse withstand voltage		8000 V	
Protection		IP20	NEMA 1

Mounting instructions

Rail		TH 35-7.5, TH 35-15
Wire stripping length		15 mm 0.591 in
Tool (for flexible conductor without ferrule)		Flat screwdriver Ø 4 mm Ø 0.157 in

The connecting capacity data for one Rigid: Solid/Stranded, or one Flexible conductor (when applicable) is a mandatory information required by IEC, UL and CSA standards (Copper conductors). All other data are provided as supplementary information only. For more details, please consult our CB, UL or CSA certificates and technical datasheet available on http://www.TE.com

CE CB RoHS USR CNR CSA EAC

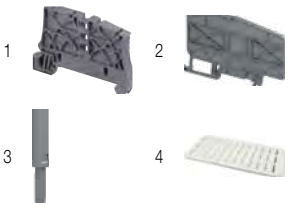

Accessories

	Description			Color	Type	Part Number		Pkg qty	Weight (1 pce) g
1	**End stops**	5.2 mm	0.205 in	Dark grey	BAZ1	1SNK900002R0000		50	5.30
2	**Circuit separators**	3 mm	0.118 in	Dark grey	CS-R3	1SNK900107R0000		20	6.40
3	**Test adapters**	For test plugs DIA 2 mm 0.079 in		Dark grey	TP2	1SNK900203R0000		20	1.70
		For test plugs DIA 4 mm 0.157 in			TP4	1SNK900205R0000		20	2.40
4	**Terminal block markers**	Blank card		White	MC812	1SNK160000R0000		22	10.00
					MC812PA	1SNK169999R0000		20	14.00
		Blank marker			MG-CPM 13 41791	1SNB041791R0612		1680	0.273
		Universal wire markers holder		Grey	UMH	1SNK900611R0000		10	0.20

Complete list of accessories is indicated in the terminal block datasheet including end stops.
Some accessories such as jumper bars may modify the terminal block's ratings: Complete information available in the accessories section of the catalog.

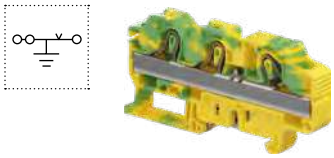

Ground PI-Spring terminal blocks

Description		Color	Type	Part Number		Pkg qty	Weight (1 pce) g
Ground	Profile aligned with ZK16-3P	Green-yellow	ZK16-PE-3P	1SNK712151R0000		20	56.65

1SNK162083S0201

Technical data valid for copper conductors only.

ZK2.5-PE PI-Spring terminal blocks
Ground - 5.2 mm 0.205 in spacing

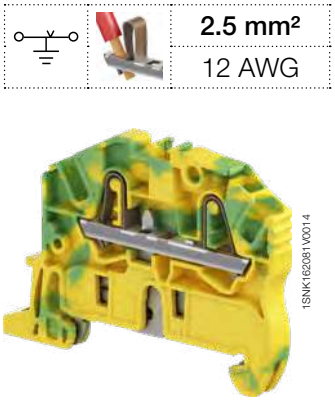

2.5 mm²	
12 AWG	

ZK2.5-PE

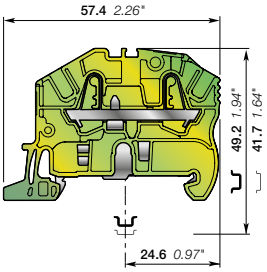

5.2 mm 0.205 in spacing

Description

Improve the safety of your installation in the event of a short-circuit thanks to our screwless rail contact:
- Rail contact non operator dependent,
- Performances above the requirements of the IEC 60947-7-2 terminal block standard,
- Secured snap on or off the rail,
- Profile aligned with ZK2.5.

Ordering details

Description		Color	Type	Part Number		Pkg qty	Weight (1 pce) g
Ground	2 connections	Green-yellow	ZK2.5-PE	1SNK705150R0000		20	10.00

Main technical data

Connecting capacity		IEC	UL - CSA
1 conductor per clamp	Rigid: Solid/Stranded	0.2 ... 4 mm²	26 ... 12 AWG
	Flexible without ferrule	0.22 ... 2.5 mm²	
	Flexible with non insulated ferrule	0.22 ... 2.5 mm²	26 ... 14 AWG
	Flexible with insulated ferrule	0.22 ... 2.5 mm²	26 ... 14 AWG
Rated cross section		2.5 mm²	12 AWG
Rated short-time withstand current (1s)		300 A	396 A
Protection		IP20	NEMA 1
Explosive atmosphere classification		IM2 II 2 GD Ex eb I/IIC/IIIC – Class I, Zone 1, AEx e II, Ex e II U	

Mounting instructions

Rail	TH 35-7.5, TH 35-15
Wire stripping length	11 mm 0.433 in
Tool (for flexible conductor without ferrule)	Flat screwdriver Ø 3.5 mm Ø 0.138 in

The connecting capacity data for one Rigid: Solid/Stranded, or one Flexible conductor (when applicable) is a mandatory information required by IEC, UL and CSA standards (Copper conductors). All other data are provided as supplementary information only. For more details, please consult our CB, UL or CSA certificates and technical datasheet available on http://www.TE.com

CE | CB | RoHS | USR CNR | CSA | EAC Ex | ATEX | IECEx | Haz Loc | BV | DNV

Accessories

	Description			Color	Type	Part Number		Pkg qty	Weight (1 pce) g
1	**End stops**	5.2 mm	0.205 in	Dark grey	BAZ1	1SNK900002R0000		50	5.30
2	**End sections**	2 mm	0.079 in	Dark grey	EK2.5	1SNK705910R0000		20	1.80
3	**Circuit separators**	3 mm	0.118 in	Dark grey	CS-R2	1SNK900106R0000		20	3.80
4	**Terminal block markers**	Blank marker		White	MG-CPM 13 41790	1SNB041790R0512		1960	0.23
		Blank card			MC512	1SNK140000R0000		22	9.00
					MC512PA	1SNK149999R0000		20	10.00
		Universal wire markers holder		Grey	UMH	1SNK900611R0000		10	0.20

Complete list of accessories is indicated in the terminal block datasheet including end stops.
Some accessories such as jumper bars may modify the terminal block's ratings: Complete information available in the accessories section of the catalog.

1SNK162039S0201

Technical data valid for copper conductors only.

ZK2.5-PE-3P PI-Spring terminal blocks

Ground with 3 connections - 5.2 mm 0.205 in spacing

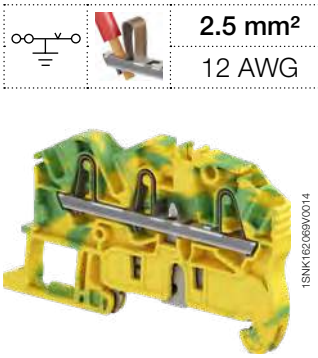

ZK2.5-PE-3P

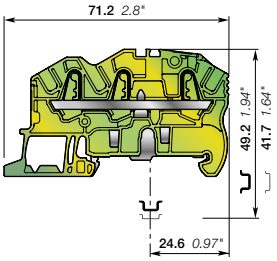

5.2 mm 0.205 in spacing

	2.5 mm²
	12 AWG

Description

Improve the safety of your installation in the event of a short-circuit thanks to our screwless rail contact:

- Rail contact non operator dependent,
- Performances above the requirements of the IEC 60947-7-2 terminal block standard,
- Secured snap on or off the rail,
- Profile aligned with ZK2.5-3P.

Ordering details

Description		Color	Type	Part Number		Pkg qty	Weight (1 pce) g
Ground	3 connections	Green-yellow	ZK2.5-PE-3P	1SNK705151R0000		20	11.90

Main technical data

Connecting capacity		IEC	UL - CSA
1 conductor per clamp	Rigid: Solid/Stranded	0.2 ... 4 mm²	26 ... 12 AWG
	Flexible without ferrule	0.22 ... 2.5 mm²	
	Flexible with non insulated ferrule	0.22 ... 2.5 mm²	26 ... 14 AWG
	Flexible with insulated ferrule	0.22 ... 2.5 mm²	26 ... 14 AWG
Rated cross section		2.5 mm²	12 AWG
Rated short-time withstand current (1s)		300 A	396 A
Protection		IP20	NEMA 1
Explosive atmosphere classification		IM2 II 2 GD Ex eb I/IIC/IIIC – Class I, Zone 1, AEx e II, Ex e II U	

Mounting instructions

Rail	TH 35-7.5, TH 35-15
Wire stripping length	11 mm 0.433 in
Tool (for flexible conductor without ferrule)	Flat screwdriver Ø 3.5 mm Ø 0.138 in

The connecting capacity data for one Rigid: Solid/Stranded, or one Flexible conductor (when applicable) is a mandatory information required by IEC, UL and CSA standards (Copper conductors). All other data are provided as supplementary information only. For more details, please consult our CB, UL or CSA certificates and technical datasheet available on http://www.TE.com

CE | CB | RoHS | USR CNR | CSA | EAC Ex | ATEX | IECEx | Haz Loc | BV | DNV

Accessories

	Description			Color	Type	Part Number		Pkg qty	Weight (1 pce) g
1	**End stops**	5.2 mm	0.205 in	Dark grey	BAZ1	1SNK900002R0000		50	5.30
2	**End sections**	2 mm	0.079 in	Dark grey	EK2.5-3P	1SNK705911R0000		20	2.40
3	**Circuit separators**	3 mm	0.118 in	Dark grey	CS-R3	1SNK900107R0000		20	6.40
4	**Terminal block markers**	Blank marker		White	MG-CPM 13 41790	1SNB041790R0512		1960	0.23
		Blank card			MC512	1SNK140000R0000		22	9.00
					MC512PA	1SNK149999R0000		20	10.00
		Universal wire markers holder		Grey	UMH	1SNK900611R0000		10	0.20

Complete list of accessories is indicated in the terminal block datasheet including end stops.
Some accessories such as jumper bars may modify the terminal block's ratings: Complete information available in the accessories section of the catalog.

1SNK162040S0201

Technical data valid for copper conductors only.

ZK2.5-PE-4P PI-Spring terminal blocks

Ground with 4 connections - 5.2 mm 0.205 in spacing

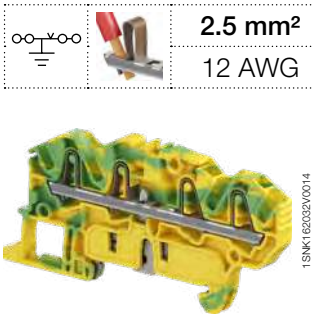

ZK2.5-PE-4P

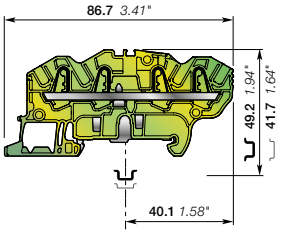

5.2 mm 0.205 in spacing

	2.5 mm²
	12 AWG

Description

Improve the safety of your installation in the event of a short-circuit thanks to our screwless rail contact:

- Rail contact non operator dependent,
- Performances above the requirements of the IEC 60947-7-2 terminal block standard,
- Secured snap on or off the rail,
- Profile aligned with ZK2.5-4P.

Ordering details

Description		Color	Type	Part Number		Pkg qty	Weight (1 pce) g
Ground	4 connections	Green-yellow	ZK2.5-PE-4P	1SNK705152R0000		20	13.60

Main technical data

Connecting capacity		IEC	UL - CSA
1 conductor per clamp	Rigid: Solid/Stranded	0.2 ... 4 mm²	26 ... 12 AWG
	Flexible without ferrule	0.22 ... 2.5 mm²	
	Flexible with non insulated ferrule	0.22 ... 2.5 mm²	26 ... 14 AWG
	Flexible with insulated ferrule	0.22 ... 2.5 mm²	26 ... 14 AWG
Rated cross section		2.5 mm²	12 AWG
Rated short-time withstand current (1s)		300 A	396 A
Protection		IP20	NEMA 1
Explosive atmosphere classification		IM2 II 2 GD Ex eb I/IIC/IIIC – Class I, Zone 1, AEx e II, Ex e II U	

The connecting capacity data for one Rigid: Solid/Stranded, or one Flexible conductor (when applicable) is a mandatory information required by IEC, UL and CSA standards (Copper conductors). All other data are provided as supplementary information only. For more details, please consult our CB, UL or CSA certificates and technical datasheet available on http://www.TE.com

CE, CB, RoHS, USR CNR, CSA, EAC Ex, ATEX, IECEx, Haz Loc, BV, DNV

Mounting instructions

Rail		TH 35-7.5, TH 35-15
Wire stripping length		11 mm 0.433 in
Tool (for flexible conductor without ferrule)		Flat screwdriver Ø 3.5 mm Ø 0.138 in

2

Accessories

	Description			Color	Type	Part Number		Pkg qty	Weight (1 pce) g
1	**End stops**	5.2 mm	0.205 in	Dark grey	BAZ1	1SNK900002R0000		50	5.30
2	**End sections**	2 mm	0.079 in	Dark grey	EK2.5-4P	1SNK705912R0000		20	2.70
3	**Circuit separators**	3 mm	0.118 in	Dark grey	CS-R3	1SNK900107R0000		20	6.40
4	**Terminal block markers**	Blank marker		White	MG-CPM 13 41790	1SNB041790R0512		1960	0.23
		Blank card			MC512	1SNK140000R0000		22	9.00
					MC512PA	1SNK149999R0000		20	10.00
		Universal wire markers holder		Grey	UMH	1SNK900611R0000		10	0.20

Complete list of accessories is indicated in the terminal block datasheet including end stops.
Some accessories such as jumper bars may modify the terminal block's ratings: Complete information available in the accessories section of the catalog.

1SNK162041S0201

Technical data valid for copper conductors only.

ZK4-PE PI-Spring terminal blocks
Ground - 6 mm 0.236 in spacing

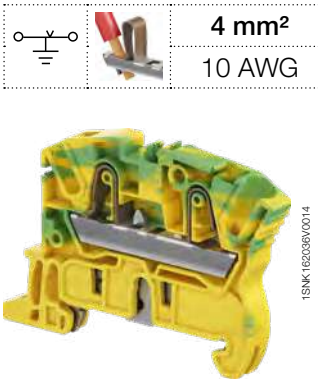

ZK4-PE

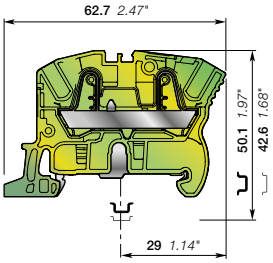

6 mm 0.236 in spacing

	4 mm²
	10 AWG

Description

Improve the safety of your installation in the event of a short-circuit thanks to our screwless rail contact:
- Rail contact non operator dependent,
- Performances above the requirements of the IEC 60947-7-2 terminal block standard,
- Secured snap on or off the rail,
- Profile aligned with ZK4.

Ordering details

Description		Color	Type	Part Number		Pkg qty	Weight (1 pce) g
Ground	2 connections	Green-yellow	ZK4-PE	1SNK706150R0000		20	12.60

Main technical data

Connecting capacity		IEC	UL - CSA
1 conductor per clamp	Rigid: Solid/Stranded	0.5 ... 6 mm²	26 ... 10 AWG
	Flexible without ferrule	0.5 ... 4 mm²	
	Flexible with non insulated ferrule	0.5 ... 4 mm²	26 ... 12 AWG
	Flexible with insulated ferrule	0.5 ... 4 mm²	26 ... 12 AWG
Rated cross section		4 mm²	10 AWG
Rated short-time withstand current (1s)		480 A	636 A
Protection		IP20	NEMA 1
Explosive atmosphere classification		IM2 II 2 GD Ex eb I/IIC/IIIC – Class I, Zone 1, AEx e II, Ex e II U	

Mounting instructions

Rail	TH 35-7.5, TH 35-15
Wire stripping length	12.5 mm 0.492 in
Tool (for flexible conductor without ferrule)	Flat screwdriver Ø 3.5 mm Ø 0.138 in

The connecting capacity data for one Rigid: Solid/Stranded, or one Flexible conductor (when applicable) is a mandatory information required by IEC, UL and CSA standards (Copper conductors). All other data are provided as supplementary information only. For more details, please consult our CB, UL or CSA certificates and technical datasheet available on http://www.TE.com

CE, CB, RoHS, USR CNR, CSA, EAC Ex, ATEX, IECEx, Haz Loc, BV, DNV

Accessories

	Description			Color	Type	Part Number		Pkg qty	Weight (1 pce) g
1	**End stops**	5.2 mm	0.205 in	Dark grey	BAZ1	1SNK900002R0000		50	5.30
2	**End sections**	2 mm	0.079 in	Dark grey	EK2.5	1SNK705910R0000		20	1.80
3	**Circuit separators**	3 mm	0.118 in	Dark grey	CS-R2	1SNK900106R0000		20	3.80
4	**Terminal block markers**	Blank marker		White	MG-CPM 13 41791	1SNB041791R0612		1680	0.27
		Blank card			MC612	1SNK150000R0000		22	10.00
					MC612PA	1SNK159999R0000		20	11.00
		Universal wire markers holder		Grey	UMH	1SNK900611R0000		10	0.20

Complete list of accessories is indicated in the terminal block datasheet including end stops.
Some accessories such as jumper bars may modify the terminal block's ratings: Complete information available in the accessories section of the catalog.

1SNK162042S0201

Technical data valid for copper conductors only.

ZK4-PE-3P PI-Spring terminal blocks

Ground with 3 connections - 6 mm 0.236 in spacing

4 mm²
10 AWG

1SNK162040V0014

ZK4-PE-3P

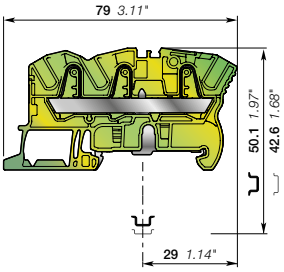

6 mm 0.236 in spacing

Description

Improve the safety of your installation in the event of a short-circuit thanks to our screwless rail contact:

- Rail contact non operator dependent,
- Performances above the requirements of the IEC 60947-7-2 terminal block standard,
- Secured snap on or off the rail,
- Profile aligned with ZK4-3P.

Ordering details

Description		Color	Type	Part Number		Pkg qty	Weight (1 pce) g
Ground	3 connections	Green-yellow	ZK4-PE-3P	1SNK706151R0000		20	15.70

Main technical data

Connecting capacity		IEC	UL - CSA
1 conductor per clamp	Rigid: Solid/Stranded	0.5 ... 6 mm²	26 ... 10 AWG
	Flexible without ferrule	0.5 ... 4 mm²	
	Flexible with non insulated ferrule	0.5 ... 4 mm²	26 ... 12 AWG
	Flexible with insulated ferrule	0.5 ... 4 mm²	26 ... 12 AWG
Rated cross section		4 mm²	10 AWG
Rated short-time withstand current (1s)		480 A	636 A
Protection		IP20	NEMA 1
Explosive atmosphere classification		IM2 II 2 GD Ex eb I/IIC/IIIC – Class I, Zone 1, AEx e II, Ex e II U	

Mounting instructions

Rail		TH 35-7.5, TH 35-15
Wire stripping length		12.5 mm 0.492 in
Tool (for flexible conductor without ferrule)		Flat screwdriver Ø 3.5 mm Ø 0.138 in

The connecting capacity data for one Rigid: Solid/Stranded, or one Flexible conductor (when applicable) is a mandatory information required by IEC, UL and CSA standards (Copper conductors). All other data are provided as supplementary information only. For more details, please consult our CB, UL or CSA certificates and technical datasheet available on http://www.TE.com

CE, CB, RoHS, USR CNR, CSA, EAC Ex, ATEX, IECEx, Haz Loc, BV, DNV

Accessories

	Description			Color	Type	Part Number		Pkg qty	Weight (1 pce) g
1	**End stops**	5.2 mm	0.205 in	Dark grey	BAZ1	1SNK900002R0000		50	5.30
2	**End sections**	2 mm	0.079 in	Dark grey	EK2.5-3P	1SNK705911R0000		20	2.40
3	**Circuit separators**	3 mm	0.118 in	Dark grey	CS-R3	1SNK900107R0000		20	6.40
4	**Terminal block markers**	Blank marker		White	MG-CPM 13 41791	1SNB041791R0612		1680	0.27
		Blank card			MC612	1SNK150000R0000		22	10.00
					MC612PA	1SNK159999R0000		20	11.00
		Universal wire markers holder		Grey	UMH	1SNK900611R0000		10	0.20

Complete list of accessories is indicated in the terminal block datasheet including end stops.
Some accessories such as jumper bars may modify the terminal block's ratings: Complete information available in the accessories section of the catalog.

1SNK162043S0201

Technical data valid for copper conductors only.

ZK4-PE-4P PI-Spring terminal blocks

Ground with 4 connections - 6 mm 0.236 in spacing

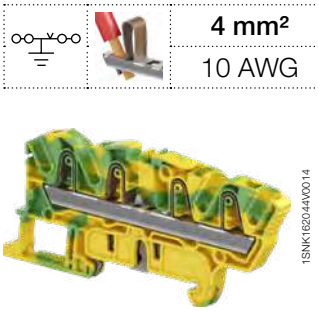

ZK4-PE-4P

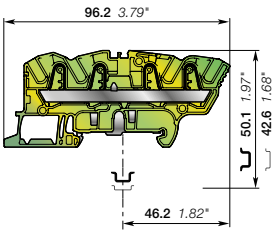

6 mm 0.236 in spacing

4 mm²
10 AWG

Description

Improve the safety of your installation in the event of a short-circuit thanks to our screwless rail contact:

- Rail contact non operator dependent,
- Performances above the requirements of the IEC 60947-7-2 terminal block standard,
- Secured snap on or off the rail,
- Profile aligned with ZK4-4P.

Ordering details

Description		Color	Type	Part Number		Pkg qty	Weight (1 pce) g
Ground	4 connections	Green-yellow	ZK4-PE-4P	1SNK706152R0000		20	18.40

Main technical data

Connecting capacity		IEC	UL - CSA
1 conductor per clamp	Rigid: Solid/Stranded	0.5 ... 6 mm²	26 ... 10 AWG
	Flexible without ferrule	0.5 ... 4 mm²	
	Flexible with non insulated ferrule	0.5 ... 4 mm²	26 ... 12 AWG
	Flexible with insulated ferrule	0.5 ... 4 mm²	26 ... 12 AWG
Rated cross section		4 mm²	10 AWG
Rated short-time withstand current (1s)		480 A	636 A
Protection		IP20	NEMA 1
Explosive atmosphere classification		IM2 II 2 GD Ex eb I/IIC/IIIC – Class I, Zone 1, AEx e II, Ex e II U	

Mounting instructions

Rail	TH 35-7.5, TH 35-15
Wire stripping length	12.5 mm 0.492 in
Tool (for flexible conductor without ferrule)	Flat screwdriver Ø 3.5 mm Ø 0.138 in

The connecting capacity data for one Rigid: Solid/Stranded, or one Flexible conductor (when applicable) is a mandatory information required by IEC, UL and CSA standards (Copper conductors). All other data are provided as supplementary information only. For more details, please consult our CB, UL or CSA certificates and technical datasheet available on http://www.TE.com

CE, CB, RoHS, USR CNR, CSA, EAC Ex, ATEX, IECEx, Haz Loc, BV, DNV

Accessories

	Description			Color	Type	Part Number		Pkg qty	Weight (1 pce) g
1	End stops	5.2 mm	0.205 in	Dark grey	BAZ1	1SNK900002R0000		50	5.30
2	End sections	2 mm	0.079 in	Dark grey	EK2.5-4P	1SNK705912R0000		20	2.70
3	Circuit separators	3 mm	0.118 in	Dark grey	CS-R3	1SNK900107R0000		20	6.40
4	Terminal block markers	Blank marker		White	MG-CPM 13 41791	1SNB041791R0612		1680	0.27
		Blank card			MC612	1SNK150000R0000		22	10.00
					MC612PA	1SNK159999R0000		20	11.00
		Universal wire markers holder		Grey	UMH	1SNK900611R0000		10	0.20

Complete list of accessories is indicated in the terminal block datasheet including end stops.
Some accessories such as jumper bars may modify the terminal block's ratings: Complete information available in the accessories section of the catalog.

1SNK162044S0201

Technical data valid for copper conductors only.

ZK6-PE PI-Spring terminal blocks
Ground - 8 mm 0.315 in spacing

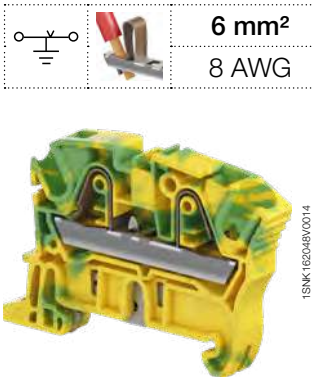

ZK6-PE

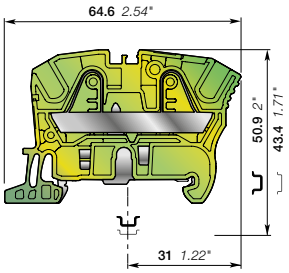

8 mm 0.315 in spacing

	6 mm²
	8 AWG

Description

Improve the safety of your installation in the event of a short-circuit thanks to our screwless rail contact:
- Rail contact non operator dependent,
- Performances above the requirements of the IEC 60947-7-2 terminal block standard,
- Secured snap on or off the rail,
- Profile aligned with ZK6.

Ordering details

Description		Color	Type	Part Number		Pkg qty	Weight (1 pce) g
Ground	2 connections	Green-yellow	ZK6-PE	1SNK708150R0000		20	20.30

Main technical data

Connecting capacity		IEC	UL - CSA
1 conductor per clamp	Rigid: Solid/Stranded	0.5 ... 10 mm²	24 ... 8 AWG
	Flexible without ferrule	0.5 ... 6 mm²	
	Flexible with non insulated ferrule	0.5 ... 6 mm²	24 ... 10 AWG
	Flexible with insulated ferrule	0.5 ... 6 mm²	24 ... 10 AWG
Rated cross section		6 mm²	8 AWG
Rated short-time withstand current (1s)		720 A	1008 A
Protection		IP20	NEMA 1
Explosive atmosphere classification		IM2 II 2 GD Ex eb I/IIC/IIIC – Class I, Zone 1, AEx e II, Ex e II U	

Mounting instructions

Rail	TH 35-7.5, TH 35-15
Wire stripping length	12.5 mm 0.492 in
Tool (for flexible conductor without ferrule)	Flat screwdriver Ø 3.5 mm Ø 0.138 in

The connecting capacity data for one Rigid: Solid/Stranded, or one Flexible conductor (when applicable) is a mandatory information required by IEC, UL and CSA standards (Copper conductors). All other data are provided as supplementary information only. For more details, please consult our CB, UL or CSA certificates and technical datasheet available on http://www.TE.com

CE, CB, RoHS, USR CNR, CSA, EAC Ex, ATEX, IECEx, Haz Loc, BV, DNV

Accessories

	Description			Color	Type	Part Number		Pkg qty	Weight (1 pce) g
1	**End stops**	5.2 mm	0.205 in	Dark grey	BAZ1	1SNK900002R0000		50	5.30
2	**End sections**	2 mm	0.079 in	Dark grey	EK2.5	1SNK705910R0000		20	1.80
3	**Circuit separators**	3 mm	0.118 in	Dark grey	CS-R2	1SNK900106R0000		20	3.80
4	**Terminal block markers**	Blank marker		White	MG-CPM 13 41791	1SNB041791R0612		1680	0.27
		Blank card			MC812	1SNK160000R0000		22	10.00
					MC812PA	1SNK169999R0000		20	14.00
		Universal wire markers holder		Grey	UMH	1SNK900611R0000		10	0.20

Complete list of accessories is indicated in the terminal block datasheet including end stops.
Some accessories such as jumper bars may modify the terminal block's ratings: Complete information available in the accessories section of the catalog.

1SNK162045S0201

Technical data valid for copper conductors only.

ZK6-PE-3P PI-Spring terminal blocks

Ground with 3 connections - 8 mm 0.315 in spacing

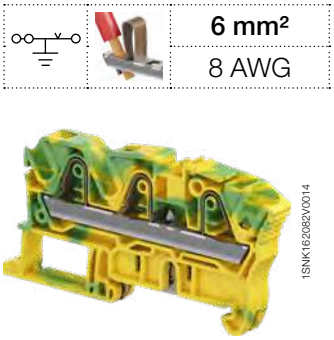

6 mm²
8 AWG

1SNK162082V0014

ZK6-PE-3P

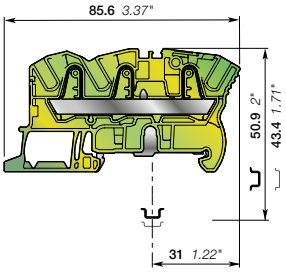

8 mm 0.315 in spacing

Description

Improve the safety of your installation in the event of a short-circuit thanks to our screwless rail contact:

- Rail contact non operator dependent,
- Performances above the requirements of the IEC 60947-7-2 terminal block standard,
- Secured snap on or off the rail,
- Profile aligned with ZK6-3P.

Ordering details

Description		Color	Type	Part Number		Pkg qty	Weight (1 pce) g
Ground	3 connections	Green-yellow	ZK6-PE-3P	1SNK708151R0000		20	21.50

Main technical data

Connecting capacity		IEC	UL - CSA
1 conductor per clamp	Rigid: Solid/Stranded	0.5 ... 10 mm²	24 ... 8 AWG
	Flexible without ferrule	0.5 ... 6 mm²	
	Flexible with non insulated ferrule	0.5 ... 6 mm²	24 ... 10 AWG
	Flexible with insulated ferrule	0.5 ... 6 mm²	24 ... 10 AWG
Rated cross section		6 mm²	8 AWG
Rated short-time withstand current (1s)		720 A	1008 A
Protection		IP20	NEMA 1
Explosive atmosphere classification		IM2 II 2 GD Ex eb I/IIC/IIIC – Class I, Zone 1, AEx e II, Ex e II U	

The connecting capacity data for one Rigid: Solid/Stranded, or one Flexible conductor (when applicable) is a mandatory information required by IEC, UL and CSA standards (Copper conductors). All other data are provided as supplementary information only. For more details, please consult our CB, UL or CSA certificates and technical datasheet available on http://www.TE.com

Mounting instructions

Rail	TH 35-7.5, TH 35-15
Wire stripping length	12.5 mm 0.492 in
Tool (for flexible conductor without ferrule)	Flat screwdriver Ø 3.5 mm Ø 0.138 in

CE, CB, RoHS, USR CNR, CSA, EAC Ex, ATEX, IECEx, Haz Loc, BV, DNV

Accessories

	Description			Color	Type	Part Number		Pkg qty	Weight (1 pce) g
1	End stops	5.2 mm	0.205 in	Dark grey	BAZ1	1SNK900002R0000		50	5.30
2	End sections	2 mm	0.079 in	Dark grey	EK6-3P	1SNK708911R0000		20	2.80
3	Circuit separators	3 mm	0.118 in	Dark grey	CS-R3	1SNK900107R0000		20	6.40
4	Terminal block markers	Blank marker		White	MG-CPM 13 41791	1SNB041791R0612		1680	0.27
		Blank card			MC812	1SNK160000R0000		22	10.00
					MC812PA	1SNK169999R0000		20	14.00
		Universal wire markers holder		Grey	UMH	1SNK900611R0000		10	0.20

Complete list of accessories is indicated in the terminal block datasheet including end stops.
Some accessories such as jumper bars may modify the terminal block's ratings: Complete information available in the accessories section of the catalog.

1SNK162046S0201

Technical data valid for copper conductors only.

ZK10-PE PI-Spring terminal blocks
Ground - 10 mm 0.394 in spacing

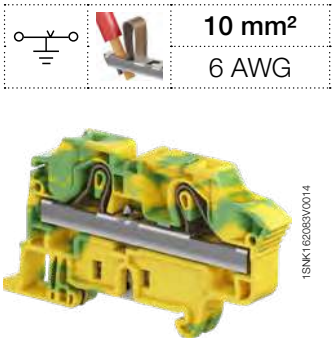

10 mm²	
6 AWG	

ZK10-PE

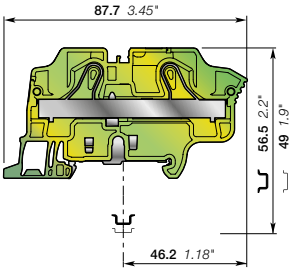

10 mm 0.394 in spacing

Description

Improve the safety of your installation in the event of a short-circuit thanks to our screwless rail contact:
- Rail contact non operator dependent,
- Performances above the requirements of the IEC 60947-7-2 terminal block standard,
- Secured snap on or off the rail,
- Profile aligned with ZK10.

Ordering details

Description		Color	Type	Part Number		Pkg qty	Weight (1 pce) g
Ground	2 connections	Green-yellow	ZK10-PE	1SNK710150R0000		20	36.20

Main technical data

Connecting capacity		IEC	UL - CSA
1 conductor per clamp	Rigid: Solid/Stranded	0.5 ... 16 mm²	20 ... 6 AWG
	Flexible without ferrule	0.5 ... 10 mm²	
	Flexible with non insulated ferrule	0.5 ... 10 mm²	20 ... 8 AWG
	Flexible with insulated ferrule	0.5 ... 10 mm²	20 ... 8 AWG
Rated cross section		10 mm²	6 AWG
Rated short-time withstand current (1s)		1200 A	1596 A
Protection		IP20	NEMA 1
Explosive atmosphere classification		IM2 II 2 GD Ex eb I/IIC/IIIC – Class I, Zone 1, AEx e II, Ex e II U	

The connecting capacity data for one Rigid: Solid/Stranded, or one Flexible conductor (when applicable) is a mandatory information required by IEC, UL and CSA standards (Copper conductors). All other data are provided as supplementary information only. For more details, please consult our CB, UL or CSA certificates and technical datasheet available on http://www.TE.com

CE, CB, RoHS, USR CNR, CSA, EAC Ex, ATEX, IECEx, Haz Loc, BV, DNV

Mounting instructions

Rail		TH 35-7.5, TH 35-15
Wire stripping length		15 mm 0.591 in
Tool (for flexible conductor without ferrule)		Flat screwdriver Ø 4 mm Ø 0.157 in

Accessories

	Description			Color	Type	Part Number		Pkg qty	Weight (1 pce) g
1	End stops	5.2 mm	0.205 in	Dark grey	BAZ1	1SNK900002R0000		50	5.30
2	End sections	2 mm	0.079 in	Dark grey	EK10	1SNK710910R0000		20	3.30
3	Circuit separators	3 mm	0.118 in	Dark grey	CS-R3	1SNK900107R0000		20	6.40
4	Test adapters	For test plugs DIA 2 mm 0.079 in		Dark grey	TP2	1SNK900203R0000		20	1.70
		For test plugs DIA 4 mm 0.157 in			TP4	1SNK900205R0000		20	2.40
5	Terminal block markers	Blank marker		White	MG-CPM 13 41791	1SNB041791R0612		1680	0.27
		Blank card			MC812	1SNK160000R0000		22	10.00
					MC812PA	1SNK169999R0000		20	14.00
		Universal wire markers holder		Grey	UMH	1SNK900611R0000		10	0.20

Complete list of accessories is indicated in the terminal block datasheet including end stops.
Some accessories such as jumper bars may modify the terminal block's ratings: Complete information available in the accessories section of the catalog.

1SNK162047S0201

Technical data valid for copper conductors only.

ZK10-PE-3P PI-Spring terminal blocks

Ground with 3 connections - 10 mm 0.394 in spacing

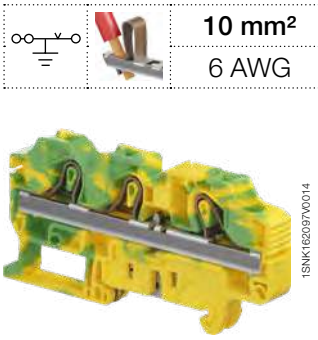

ZK10-PE-3P

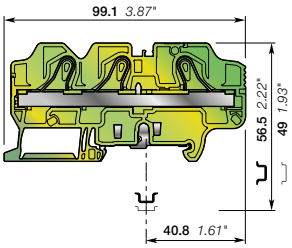

10 mm 0.394 in spacing

	10 mm²
	6 AWG

Description

Improve the safety of your installation in the event of a short-circuit thanks to our screwless rail contact:

- Rail contact non operator dependent,
- Performances above the requirements of the IEC 60947-7-2 standard,
- Secured snap on or off the rail,
- Profile aligned with ZK10-3P.

Ordering details

Description		Color	Type	Part Number		Pkg qty	Weight (1 pce) g
Ground	3 connections	Green-yellow	ZK10-PE-3P	1SNK710151R0000		20	43.3

Main technical data

Connecting capacity		IEC	UL - CSA
1 conductor per clamp	Rigid: Solid/Stranded	0.5 ... 16 mm²	20 ... 6 AWG
	Flexible without ferrule	0.5 ... 10 mm²	
	Flexible with non insulated ferrule	0.5 ... 10 mm²	20 ... 8 AWG
	Flexible with insulated ferrule	0.5 ... 10 mm²	20 ... 8 AWG
Rated cross section		10 mm²	6 AWG
Rated short-time withstand current (1s)		1200 A	1596 A
Protection		IP20	NEMA 1
Explosive atmosphere classification		IM2 II 2 GD Ex eb I/II/IIIC	

The connecting capacity data for one Rigid: Solid/Stranded, or one Flexible conductor (when applicable) is a mandatory information required by IEC, UL and CSA standards (Copper conductors). All other data are provided as supplementary information only. For more details, please consult our CB, UL or CSA certificates and technical datasheet available on http://www.TE.com

CE, CB, RoHS, USR CNR, CSA, EAC Ex, ATEX, IECEx, BV

Mounting instructions

Rail		TH 35-7.5, TH 35-15
Wire stripping length		15 mm 0.591 in
Tool (for flexible conductor without ferrule)		Flat screwdriver Ø 4 mm Ø 0.157 in

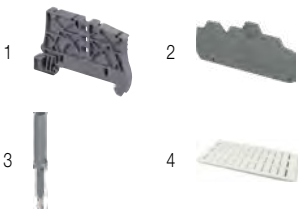

Accessories

	Description			Color	Type	Part Number		Pkg qty	Weight (1 pce) g
1	**End stops**	5.2 mm	0.205 in	Dark grey	BAZ1	1SNK900002R0000		50	5.30
2	**End sections**	2 mm	0.079 in	Dark grey	EK10-3P	1SNK710911R0000		20	4.5
3	**Test adapters**	For test plugs DIA 2 mm 0.079 in		Dark grey	TP2	1SNK900203R0000		20	1.70
		For test plugs DIA 4 mm 0.157 in			TP4	1SNK900205R0000		20	2.40
4	**Terminal block markers**	Blank marker		White	MG-CPM 13 41791	1SNB041791R0612		1680	0.27
		Blank card			MC812	1SNK160000R0000		22	10.00
					MC812PA	1SNK169999R0000		20	14.00
		Universal wire markers holder		Grey	UMH	1SNK900611R0000		10	0.20

Complete list of accessories is indicated in the terminal block datasheet including end stops.
Some accessories such as jumper bars may modify the terminal block's ratings: Complete information available in the accessories section of the catalog.

1SNK162062S0201

Technical data valid for copper conductors only.

ZK16-PE PI-Spring terminal blocks
Ground - 12 mm 0.472 in spacing

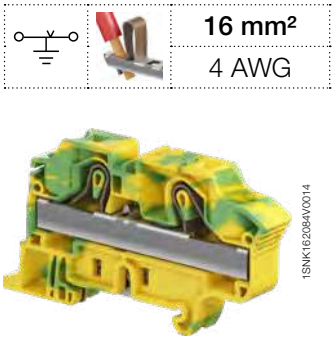

ZK16-PE

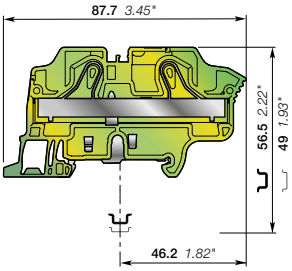

12 mm 0.472 in spacing

	16 mm²
	4 AWG

Description

Improve the safety of your installation in the event of a short-circuit thanks to our screwless rail contact:
- Rail contact non operator dependent,
- Performances above the requirements of the IEC 60947-7-2 terminal block standard,
- Secured snap on or off the rail,
- Profile aligned with ZK16.

Ordering details

Description		Color	Type	Part Number		Pkg qty	Weight (1 pce) g
Ground	2 connections	Green-yellow	ZK16-PE	1SNK712150R0000		20	47.00

Main technical data

Connecting capacity		IEC	UL - CSA
1 conductor per clamp	Rigid: Solid/Stranded	0.5 ... 25 mm²	20 ... 4 AWG
	Flexible without ferrule	0.5 ... 16 mm²	
	Flexible with non insulated ferrule	0.5 ... 16 mm²	20 ... 6 AWG
	Flexible with insulated ferrule	0.5 ... 16 mm²	20 ... 6 AWG
Rated cross section		16 mm²	4 AWG
Rated short-time withstand current (1s)		1920 A	2544 A
Protection		IP20	NEMA 1
Explosive atmosphere classification		IM2 II 2 GD Ex eb I/IIC/IIIC – Class I, Zone 1, AEx e II, Ex e II U	

Mounting instructions

Rail	TH 35-7.5, TH 35-15
Wire stripping length	15 mm 0.591 in
Tool (for flexible conductor without ferrule)	Flat screwdriver Ø 4 mm Ø 0.157 in

The connecting capacity data for one Rigid: Solid/Stranded, or one Flexible conductor (when applicable) is a mandatory information required by IEC, UL and CSA standards (Copper conductors). All other data are provided as supplementary information only. For more details, please consult our CB, UL or CSA certificates and technical datasheet available on http://www.TE.com

CE, CB, RoHS, USR CNR, CSA, EAC Ex, ATEX, IECEx, Haz Loc, BV, DNV

Accessories

	Description			Color	Type	Part Number		Pkg qty	Weight (1 pce) g
1	**End stops**	5.2 mm	0.205 in	Dark grey	BAZ1	1SNK900002R0000		50	5.30
2	**End sections**	2 mm	0.079 in	Dark grey	EK10	1SNK710910R0000		20	3.30
3	**Circuit separators**	3 mm	0.118 in	Dark grey	CS-R3	1SNK900107R0000		20	6.40
4	**Test adapters**	For test plugs DIA 2 mm 0.079 in		Dark grey	TP2	1SNK900203R0000		20	1.70
		For test plugs DIA 4 mm 0.157 in			TP4	1SNK900205R0000		20	2.40
5	**Terminal block markers**	Blank marker		White	MG-CPM 13 41791	1SNB041791R0612		1680	0.27
		Blank card			MC812	1SNK160000R0000		22	10.00
					MC812PA	1SNK169999R0000		20	14.00
		Universal wire markers holder		Grey	UMH	1SNK900611R0000		10	0.20

Complete list of accessories is indicated in the terminal block datasheet including end stops.
Some accessories such as jumper bars may modify the terminal block's ratings: Complete information available in the accessories section of the catalog.

1SNK162048S0201

Technical data valid for copper conductors only.

ZK16-PE-3P PI-Spring terminal blocks

Ground with 3 connections - 12 mm 0.472 in spacing

16 mm²
4 AWG

ZK16-PE-3P

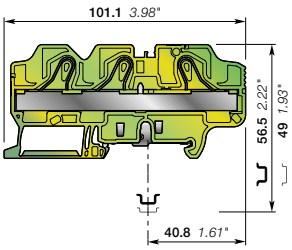

12 mm 0.472 in spacing

Description

Improve the safety of your installation in the event of a short-circuit thanks to our screwless rail contact:

- Rail contact non operator dependent,
- Performances above the requirements of the IEC 60947-7-2 standard,
- Secured snap on or off the rail,
- Profile aligned with ZK16-3P.

Ordering details

Description		Color	Type	Part Number		Pkg qty	Weight (1 pce) g
Ground	3 connections	Green-yellow	ZK16-PE-3P	1SNK712151R0000		20	56.65

Main technical data

Connecting capacity		IEC	UL - CSA
1 conductor per clamp	Rigid: Solid/Stranded	0.5 ... 25 mm²	20 ... 4 AWG
	Flexible without ferrule	0.5 ... 16 mm²	
	Flexible with non insulated ferrule	0.5 ... 16 mm²	20 ... 6 AWG
	Flexible with insulated ferrule	0.5 ... 16 mm²	20 ... 6 AWG
Rated cross section		16 mm²	4 AWG
Rated short-time withstand current (1s)		1920 A	2544 A
Protection		IP20	NEMA 1
Explosive atmosphere classification		IM2 II 2 GD Ex eb I/II/IIIC	

Mounting instructions

Rail	TH 35-7.5, TH 35-15
Wire stripping length	15 mm 0.591 in
Tool (for flexible conductor without ferrule)	Flat screwdriver Ø 4 mm Ø 0.157 in

The connecting capacity data for one Rigid: Solid/Stranded, or one Flexible conductor (when applicable) is a mandatory information required by IEC, UL and CSA standards (Copper conductors). All other data are provided as supplementary information only. For more details, please consult our CB, UL or CSA certificates and technical datasheet available on http://www.TE.com

CE, CB, RoHS, USR CNR, CSA, EAC Ex, ATEX, IECEx, BV

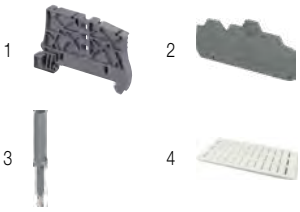

Accessories

	Description			Color	Type	Part Number		Pkg qty	Weight (1 pce) g
1	**End stops**	5.2 mm	0.205 in	Dark grey	BAZ1	1SNK900002R0000		50	5.30
2	**End sections**	2 mm	0.079 in	Dark grey	EK10-3P	1SNK710911R0000		20	4.5
3	**Test adapters**	For test plugs DIA 2 mm 0.079 in		Dark grey	TP2	1SNK900203R0000		20	1.70
		For test plugs DIA 4 mm 0.157 in			TP4	1SNK900205R0000		20	2.40
4	**Terminal block markers**	Blank marker		White	MG-CPM 13 41791	1SNB041791R0612		1680	0.27
		Blank card			MC812	1SNK160000R0000		22	10.00
					MC812PA	1SNK169999R0000		20	14.00
		Universal wire markers holder		Grey	UMH	1SNK900611R0000		10	0.20

Complete list of accessories is indicated in the terminal block datasheet including end stops.
Some accessories such as jumper bars may modify the terminal block's ratings: Complete information available in the accessories section of the catalog.

1SNK162064S0201

Technical data valid for copper conductors only.

ZK2.5-S PI-Spring terminal blocks

Disconnect with blade - with test sockets - 5.2 mm 0.205 in spacing

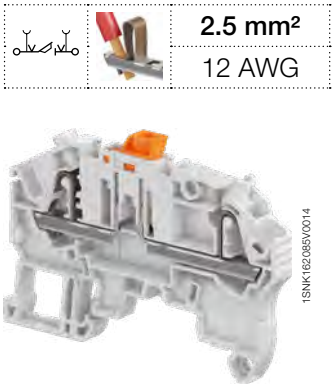

2.5 mm²
12 AWG

ZK2.5-S

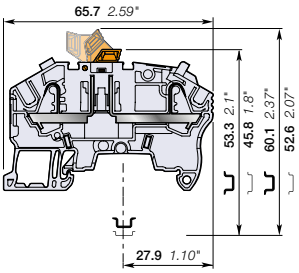

5.2 mm 0.205 in spacing

Description

Combine high performance with compact dimensions: 630 V IEC 300 V UL.
Secure the current measurement:
- for currents below 50 mA, thanks to 2 built in test points DIA 2 mm 0.079 in,
- for currents up to 16 A, by using the TP4 test adapter inserted into the jumper channels.

Ordering details

Description		Color	Type	Part Number		Pkg qty	Weight (1 pce) g
Disconnect	with 2 test sockets DIA 2 mm 0.079 in	Grey	ZK2.5-S	1SNK705310R0000		50	8.10
		Blue	ZK2.5-S-BL	1SNK705320R0000		50	8.10
		Orange	ZK2.5-S-OR	1SNK705330R0000		50	8.10

Main technical data

Connecting capacity		IEC	UL - CSA
1 conductor per clamp	Rigid: Solid/Stranded	0.2 ... 4 mm²	26 ... 12 AWG
	Flexible without ferrule	0.22 ... 2.5 mm²	
	Flexible with non insulated ferrule	0.22 ... 2.5 mm²	26 ... 14 AWG
	Flexible with insulated ferrule	0.22 ... 2.5 mm²	26 ... 14 AWG
2 conductors per clamp	Flexible with twin ferrule	0.22 ... 0.5 mm²	26 ... 20 AWG
Rated current / Rated cross section		20 A / 2.5 mm²	20 A / 12 AWG
Rated short-time withstand current (1s)		300 A	396 A
Rated voltage		630 V	300 V
Impulse withstand voltage		6000 V	
Protection		IP20	NEMA 1

Mounting instructions

Rail		TH 35-7.5, TH 35-15
Wire stripping length		11 mm 0.433 in
Tool (for flexible conductor without ferrule)		Flat screwdriver Ø 3.5 mm Ø 0.138 in

Recommendation for best usage: in horizontal assemblies, disconnect terminal blocks should be mounted with fixed foot on top (power side) so that the disconnect knife does not partially close through gravity. Furthermore, as specified per IEC 60947-7-1, disconnect terminal blocks are intended to be used for temporary disconnection at zero potential and at no load.

The connecting capacity data for one Rigid: Solid/Stranded, or one Flexible conductor (when applicable) is a mandatory information required by IEC, UL and CSA standards (Copper conductors). All other data are provided as supplementary information only. For more details, please consult our CB, UL or CSA certificates and technical datasheet available on http://www.TE.com

CE, CB, RoHS, USR CNR, CSA, EAC, BV, DNV

Accessories

	Description			Color	Type	Part Number		Pkg qty	Weight (1 pce) g
1	**End stops**	5.2 mm	0.205 in	Dark grey	BAZ1	1SNK900002R0000		50	5.30
2	**End sections**	2 mm	0.079 in	Dark grey	EK2.5-3P	1SNK705911R0000		20	2.40
3	**Jumper bars**	2 poles	32 A (IEC)	Orange	JB5-2	1SNK905302R0000		50	1.30
		3 poles	32 A (IEC)		JB5-3	1SNK905303R0000		50	2.00
		4 poles	32 A (IEC)		JB5-4	1SNK905304R0000		50	2.70
		5 poles	32 A (IEC)		JB5-5	1SNK905305R0000		50	3.50
		10 poles	32 A (IEC)		JB5-10	1SNK905310R0000		30	7.10
		50 poles	32 A (IEC)		JB5-50	1SNK905350R0000		10	36.00
4	**Circuit separators**	3 mm	0.118 in	Dark grey	CS-R3	1SNK900107R0000		20	6.40
5	**Test adapters**	For test plugs DIA 2 mm 0.079 in		Dark grey	TP2	1SNK900203R0000		20	1.70
		For test plugs DIA 4 mm 0.157 in			TP4	1SNK900205R0000		20	2.40
6	**Test connectors**	5.2 mm 0.205 in spacing		Dark grey	TC5	1SNK900200R0000		10	5.20
		End module, 5.2 mm 0.205 in			TC5-R1	1SNK900201R0000		10	5.20
7	**Shield connectors**				SHBP	1SNK900601R0000		20	4.10
8	**Terminal block markers**	Blank marker		White	MG-CPM 13 41790	1SNB041790R0512		1960	0.23
		Blank card			MC512	1SNK140000R0000		22	9.00
					MC512PA	1SNK149999R0000		20	10.00
		Universal wire markers holder		Grey	UMH	1SNK900611R0000		10	0.20

Complete list of accessories is indicated in the terminal block datasheet including end stops.
Some accessories such as jumper bars may modify the terminal block's ratings: Complete information available in the accessories section of the catalog.

1SNK162036S0201

Technical data valid for copper conductors only.

ZK2.5-S-4P PI-Spring terminal blocks

Disconnect with blade - with test socket - 5.2 mm 0.205 in spacing

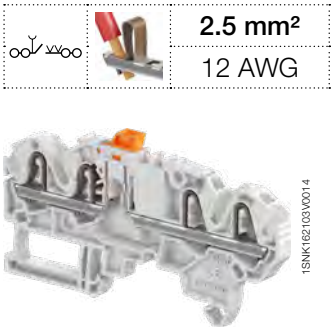

2.5 mm²
12 AWG

ZK2.5-S-4P

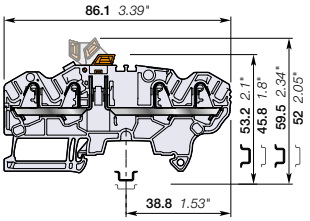

5.2 mm 0.205 in spacing

Description

- Combine high performances with compact dimensions: 630 V IEC 300 V UL,
- Simplify the measurement with 1 built in test point DIA 2 mm 0.079 in (for current below 50mA) and TP... test adapter inserted into one jumper channel,
- Clear marking visibility with SNK top marking location 20% enlarged.

Ordering details

Description		Color	Type	Part Number		Pkg qty	Weight (1 pce) g
Disconnect	with 1 test socket DIA 2 mm 0.079 in	Grey	ZK2.5-S-4P	1SNK705312R0000		50	11.14
		Blue	ZK2.5-S-4P-BL	1SNK705321R0000		50	11.14
		Orange	ZK2.5-S-4P-OR	1SNK705331R0000		50	11.14

Main technical data

Connecting capacity		IEC	UL - CSA
1 conductor per clamp	Rigid: Solid/Stranded	0.2 ... 4 mm²	26 ... 12 AWG
	Flexible without ferrule	0.22 ... 2.5 mm²	
	Flexible with non insulated ferrule	0.22 ... 2.5 mm²	26 ... 14 AWG
	Flexible with insulated ferrule	0.22 ... 2.5 mm²	26 ... 14 AWG
2 conductors per clamp	Flexible with twin ferrule	0.22 ... 0.5 mm²	26 ... 20 AWG
Rated current / Rated cross section		20 A / 2.5 mm²	20 A / 12 AWG
Rated short-time withstand current (1s)		300 A	
Short Circuit Current Rating (with specific conditions)			
Rated voltage		630 V	300 V
Impulse withstand voltage		6000 V	
Protection		IP20	NEMA 1

Mounting instructions

Rail		TH 35-7.5, TH 35-15
Wire stripping length		11 mm 0.433 in
Tool (for flexible conductor without ferrule)		Flat screwdriver Ø 3.5 mm Ø 0.138 in

Recommendation for best usage: in horizontal assemblies, disconnect terminal blocks should be mounted with fixed foot on top (power side) so that the disconnect knife does not partially close through gravity. Furthermore, as specified per IEC 60947-7-1, disconnect terminal blocks are intended to be used for temporary disconnection at zero potential and at no load.

The connecting capacity data for one Rigid: Solid/Stranded, or one Flexible conductor (when applicable) is a mandatory information required by IEC, UL and CSA standards (Copper conductors). All other data are provided as supplementary information only. For more details, please consult our CB, UL or CSA certificates and technical datasheet available on http://www.TE.com

CE CB RoHS USR CNR CSA EAC BV

Accessories

	Description			Color	Type	Part Number		Pkg qty	Weight (1 pce) g
1	**End stops**	5.2 mm	0.205 in	Dark grey	BAZ1	1SNK900002R0000		50	5.30
2	**End sections**	2 mm	0.158 in	Dark grey	EK2.5-S-4P	1SNK705913R0000		20	2.94
3	**Jumper bars**	2 poles	32 A (IEC)	Orange	JB5-2	1SNK905302R0000		50	1.30
		3 poles	32 A (IEC)		JB5-3	1SNK905303R0000		50	2.00
		4 poles	32 A (IEC)		JB5-4	1SNK905304R0000		50	2.70
		5 poles	32 A (IEC)		JB5-5	1SNK905305R0000		50	3.50
		10 poles	32 A (IEC)		JB5-10	1SNK905310R0000		30	7.10
		50 poles	32 A (IEC)		JB5-50	1SNK905350R0000		10	36.00
4	**Circuit separators**	3 mm	0.118 in	Dark grey	CS-R3	1SNK900107R0000		20	6.40
5	**Test adapters**	For test plugs DIA 2 mm 0.079 in		Dark grey	TP2	1SNK900203R0000		20	1.70
		For test plugs DIA 4 mm 0.157 in			TP4	1SNK900205R0000		20	2.40
6	**Test connectors**	5.2 mm 0.205 in spacing		Dark grey	TC5	1SNK900200R0000		10	5.20
		End module, 5.2 mm 0.205 in			TC5-R1	1SNK900201R0000		10	5.20
7	**Terminal block markers**	Blank marker		White	MG-CPM 13 41790	1SNB041790R0512		1960	0.23
		Blank card			MC512	1SNK140000R0000		22	9.00
					MC512PA	1SNK149999R0000		20	10.00
		Universal wire markers holder		Grey	UMH	1SNK900611R0000		10	0.20

Complete list of accessories is indicated in the terminal block datasheet including end stops.
Some accessories such as jumper bars may modify the terminal block's ratings: Complete information available in the accessories section of the catalog.

1SNK162069S0201

Technical data valid for copper conductors only.

ZK2.5-S-R1 PI-Spring terminal blocks

Disconnect with blade - 6 mm 0.236 in spacing

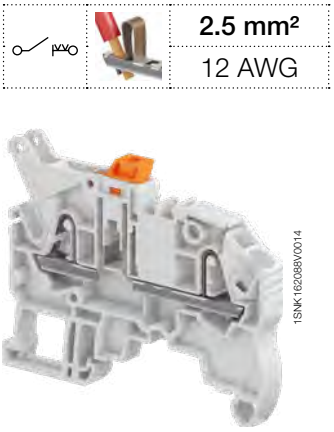

2.5 mm²
12 AWG

Description

Simplify the distribution of circuits in marshalling cabinets thanks to our disconnect terminal blocks with the same profile as ZK2.5-SF fuse.

1SNK162088V0014

ZK2.5-S-R1

Ordering details

Description		Color	Type	Part Number		Pkg qty	Weight (1 pce) g
Disconnect	Profile aligned with ZK2.5-SF	Grey	ZK2.5-S-R1	1SNK706310R0000		50	8.90

Main technical data

Connecting capacity		IEC	UL - CSA
1 conductor per clamp	Rigid: Solid/Stranded	0.2 ... 4 mm²	26 ... 12 AWG
	Flexible without ferrule	0.22 ... 2.5 mm²	
	Flexible with non insulated ferrule	0.22 ... 2.5 mm²	26 ... 14 AWG
	Flexible with insulated ferrule	0.22 ... 2.5 mm²	26 ... 14 AWG
2 conductors per clamp	Flexible with twin ferrule	0.22 ... 0.5 mm²	26 ... 20 AWG
Rated current / Rated cross section		20 A / 2.5 mm²	20 A / 12 AWG
Rated short-time withstand current (1s)		300 A	396 A
Rated voltage		630 V	300 V
Impulse withstand voltage		6000 V	
Protection		IP20	NEMA 1

Mounting instructions

Rail		TH 35-7.5, TH 35-15
Wire stripping length		11 mm 0.433 in
Tool (for flexible conductor without ferrule)		Flat screwdriver Ø 3.5 mm Ø 0.138 in

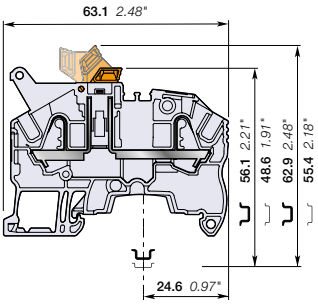

6 mm 0.236 in spacing

Recommendation for best usage: in horizontal assemblies, disconnect terminal blocks should be mounted with fixed foot on top (power side) so that the disconnect knife does not partially close through gravity. Furthermore, as specified per IEC 60947-7-1, disconnect terminal blocks are intended to be used for temporary disconnection at zero potential and at no load.

The connecting capacity data for one Rigid: Solid/Stranded, or one Flexible conductor (when applicable) is a mandatory information required by IEC, UL and CSA standards (Copper conductors). All other data are provided as supplementary information only. For more details, please consult our CB, UL or CSA certificates and technical datasheet available on http://www.TE.com

CE CB RoHS USR CNR CSA EAC BV DNV

Accessories

	Description			Color	Type	Part Number		Pkg qty	Weight (1 pce) g
1	End stops	5.2 mm	0.205 in	Dark grey	BAZ1	1SNK900002R0000		50	5.30
2	End sections	2 mm	0.079 in	Dark grey	EK2.5-3P	1SNK705911R0000		20	2.40
3	Jumper bars	2 poles	41 A (IEC)	Orange	JB6-2	1SNK906302R0000		50	1.30
		3 poles	41 A (IEC)		JB6-3	1SNK906303R0000		50	2.10
		4 poles	41 A (IEC)		JB6-4	1SNK906304R0000		50	2.90
		5 poles	41 A (IEC)		JB6-5	1SNK906305R0000		50	3.60
		10 poles	41 A (IEC)		JB6-10	1SNK906310R0000		20	7.40
		50 poles	41 A (IEC)		JB6-50	1SNK906350R0000		10	38.10
4	Circuit separators	3 mm	0.118 in	Dark grey	CS-R3	1SNK900107R0000		20	6.40
5	Test adapters	For test plugs DIA 2 mm 0.079 in		Dark grey	TP2	1SNK900203R0000		20	1.70
		For test plugs DIA 4 mm 0.157 in			TP4	1SNK900205R0000		20	2.40
6	Test connectors	End module, 5.2 mm 0.205 in		Dark grey	TC5-R1	1SNK900201R0000		10	5.20
7	Spacers	0.8 mm	0.031 in	Dark grey	ES-TC6	1SNK900105R0000		10	0.80
8	Terminal block markers	Blank marker		White	MG-CPM 13 41791	1SNB041791R0612		1680	0.27
		Blank card			MC612	1SNK150000R0000		22	10.00
					MC612PA	1SNK159999R0000		20	11.00
		Universal wire markers holder		Grey	UMH	1SNK900611R0000		10	0.20

Complete list of accessories is indicated in the terminal block datasheet including end stops.
Some accessories such as jumper bars may modify the terminal block's ratings: Complete information available in the accessories section of the catalog.

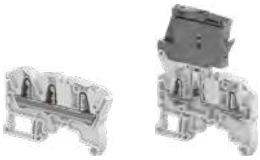

ZK4-3P ZK2.5-SF

PI-Spring terminal blocks

Description	Color	Type	Part Number		Pkg qty	Weight (1 pce) g
Feed-through	Grey	ZK4-3P	1SNK706011R0000		50	11.00
Fuse	Grey, dark grey	ZK2.5-SF	1SNK706410R0000		50	16.20

1SNK162037S0201

Technical data valid for copper conductors only.

ZK2.5-SP PI-Spring terminal blocks

Disconnect with plug - with test sockets - 5.2 mm 0.205 in spacing

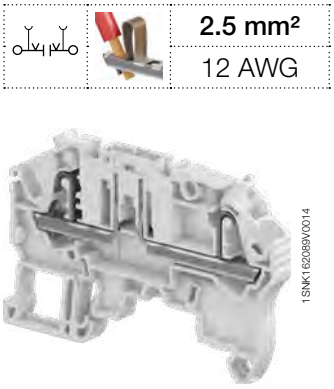

1SNK162089V0014

ZK2.5-SP

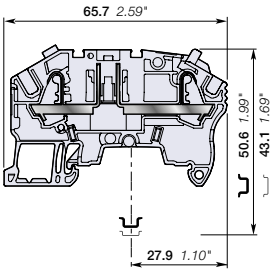

5.2 mm 0.205 in spacing

2.5 mm²
12 AWG

Description

The flexible solution for fitting the component of your choice in series with our quick-fitting PG5 component holder plug:

– compatible with components of 8.8 x 3.2 mm 0.346 x 0.125 in, such as resistors, diodes or mini axial fuses.

Ordering details

Description		Color	Type	Part Number		Pkg qty	Weight (1 pce) g
Disconnect	with 2 test sockets DIA 2 mm 0.079 in	Grey	ZK2.5-SP	1SNK705311R0000		50	11.50

Main technical data

Connecting capacity		IEC	UL - CSA
1 conductor per clamp	Rigid: Solid/Stranded	0.2 ... 4 mm²	26 ... 12 AWG
	Flexible without ferrule	0.22 ... 2.5 mm²	
	Flexible with non insulated ferrule	0.22 ... 2.5 mm²	26 ... 14 AWG
	Flexible with insulated ferrule	0.22 ... 2.5 mm²	26 ... 14 AWG
2 conductors per clamp	Flexible with twin ferrule	0.22 ... 0.5 mm²	26 ... 20 AWG
Rated current / Rated cross section		17 A / 2.5 mm²	18 A / 12 AWG
Rated short-time withstand current (1s)		300 A	396 A
Rated voltage		630 V	300 V
Impulse withstand voltage		6000 V	
Protection		IP20	NEMA 1

Mounting instructions

Rail	TH 35-7.5, TH 35-15
Wire stripping length	11 mm 0.433 in
Tool (for flexible conductor without ferrule)	Flat screwdriver Ø 3.5 mm Ø 0.138 in

The connecting capacity data for one Rigid: Solid/Stranded, or one Flexible conductor (when applicable) is a mandatory information required by IEC, UL and CSA standards (Copper conductors). All other data are provided as supplementary information only. For more details, please consult our CB, UL or CSA certificates and technical datasheet available on http://www.TE.com

CE, CB, RoHS, USR CNR, CSA, EAC, BV, DNV

Accessories

	Description			Color	Type	Part Number		Pkg qty	Weight (1 pce) g
1	**End stops**	5.2 mm	0.205 in	Dark grey	BAZ1	1SNK900002R0000		50	5.30
2	**End sections**	2 mm	0.079 in	Dark grey	EK2.5-3P	1SNK705911R0000		20	2.40
3	**Jumper bars**	2 poles	32 A (IEC)	Orange	JB5-2	1SNK905302R0000		50	1.30
		3 poles	32 A (IEC)		JB5-3	1SNK905303R0000		50	2.00
		4 poles	32 A (IEC)		JB5-4	1SNK905304R0000		50	2.70
		5 poles	32 A (IEC)		JB5-5	1SNK905305R0000		50	3.50
		10 poles	32 A (IEC)		JB5-10	1SNK905310R0000		30	7.10
		50 poles	32 A (IEC)		JB5-50	1SNK905350R0000		10	36.00
4	**Circuit separators**	3 mm	0.118 in	Dark grey	CS-R3	1SNK900107R0000		20	6.40
5	**Test adapters**	For test plugs DIA 2 mm 0.079 in		Dark grey	TP2	1SNK900203R0000		20	1.70
		For test plugs DIA 4 mm 0.157 in			TP4	1SNK900205R0000		20	2.40
6	**Test connectors**	5.2 mm 0.205 in spacing		Dark grey	TC5	1SNK900200R0000		10	5.20
		End module, 5.2 mm 0.205 in			TC5-R1	1SNK900201R0000		10	5.20
7	**Shield connectors**				SHBP	1SNK900601R0000		20	4.10
8	**Component plugs**	Components in series with circuit		Dark grey	PG5	1SNK900401R0000		20	3.50
9	**Disconnect plugs**	Equipped with linking bar		Orange	PG5-R1	1SNK900402R0000		20	3.50
10	**Terminal block markers**	Blank marker		White	MG-CPM 13 41790	1SNB041790R0512		1960	0.23
		Blank card			MC512	1SNK140000R0000		22	9.00
					MC512PA	1SNK149999R0000		20	10.00
		Universal wire markers holder		Grey	UMH	1SNK900611R0000		10	0.20

Complete list of accessories is indicated in the terminal block datasheet including end stops.
Some accessories such as jumper bars may modify the terminal block's ratings: Complete information available in the accessories section of the catalog.

1SNK162038S0201

Technical data valid for copper conductors only.

ZK2.5-SP-4P PI-Spring terminal blocks

Disconnect with plug - with test socket - 5.2 mm 0.205 in spacing

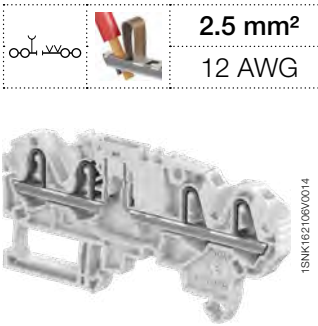

ZK2.5-SP-4P

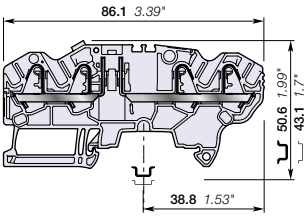

5.2 mm 0.205 in spacing

	2.5 mm²
	12 AWG

Description

The flexible solution for fitting the component of your choice in series with our quick-fitting PG5 component holder plug:

– compatible with components of 8.8 x 3.2 mm 0.346 x 0.125 in, such as resistors, diodes or mini axial fuses.

Ordering details

Description		Color	Type	Part Number		Pkg qty	Weight (1 pce) g
Disconnect	with 1 test socket DIA 2 mm 0.079 in	Grey	ZK2.5-SP-4P	1SNK705313R0000		50	10.67

Main technical data

Connecting capacity		IEC	UL - CSA
1 conductor per clamp	Rigid: Solid/Stranded	0.2 ... 4 mm²	26 ... 12 AWG
	Flexible without ferrule	0.22 ... 2.5 mm²	
	Flexible with non insulated ferrule	0.22 ... 2.5 mm²	26 ... 14 AWG
	Flexible with insulated ferrule	0.22 ... 2.5 mm²	26 ... 14 AWG
2 conductors per clamp	Flexible with twin ferrule	0.22 ... 0.5 mm²	26 ... 20 AWG
Rated current / Rated cross section		17 A / 2.5 mm²	18 A / 12 AWG
Rated short-time withstand current (1s)		300 A	
Short Circuit Current Rating (with specific conditions)			
Rated voltage		630 V	300 V
Impulse withstand voltage		6000 V	
Protection		IP20	NEMA 1

Mounting instructions

Rail		TH 35-7.5, TH 35-15
Wire stripping length		11 mm 0.433 in
Tool (for flexible conductor without ferrule)		Flat screwdriver Ø 3.5 mm Ø 0.138 in

The connecting capacity data for one Rigid: Solid/Stranded, or one Flexible conductor (when applicable) is a mandatory information required by IEC, UL and CSA standards (Copper conductors). All other data are provided as supplementary information only. For more details, please consult our CB, UL or CSA certificates and technical datasheet available on http://www.TE.com

CE CB RoHS USR CNR CSA EAC BV

Accessories

	Description			Color	Type	Part Number		Pkg qty	Weight (1 pce) g
1	**End stops**	5.2 mm	0.205 in	Dark grey	BAZ1	1SNK900002R0000		50	5.30
2	**End sections**	2 mm	0.158 in	Dark grey	EK2.5-S-4P	1SNK705913R0000		20	2.94
3	**Jumper bars**	2 poles	32 A (IEC)	Orange	JB5-2	1SNK905302R0000		50	1.30
		3 poles	32 A (IEC)		JB5-3	1SNK905303R0000		50	2.00
		4 poles	32 A (IEC)		JB5-4	1SNK905304R0000		50	2.70
		5 poles	32 A (IEC)		JB5-5	1SNK905305R0000		50	3.50
		10 poles	32 A (IEC)		JB5-10	1SNK905310R0000		30	7.10
		50 poles	32 A (IEC)		JB5-50	1SNK905350R0000		10	36.00
4	**Circuit separators**	3 mm	0.118 in	Dark grey	CS-R3	1SNK900107R0000		20	6.40
5	**Test adapters**	For test plugs DIA 2 mm 0.079 in		Dark grey	TP2	1SNK900203R0000		20	1.70
		For test plugs DIA 4 mm 0.157 in			TP4	1SNK900205R0000		20	2.40
6	**Test connectors**	5.2 mm 0.205 in spacing		Dark grey	TC5	1SNK900200R0000		10	5.20
		End module, 5.2 mm 0.205 in			TC5-R1	1SNK900201R0000		10	5.20
7	**Component plugs**	Components in series with circuit		Dark grey	PG5	1SNK900401R0000		20	3.50
8	**Disconnect plugs**	Equipped with linking bar		Orange	PG5-R1	1SNK900402R0000		20	3.50
9	**Terminal block markers**	Blank marker		White	MG-CPM 13 41790	1SNB041790R0512		1960	0.23
		Blank card			MC512	1SNK140000R0000		22	9.00
					MC512PA	1SNK149999R0000		20	10.00
		Universal wire markers holder		Grey	UMH	1SNK900611R0000		10	0.20

Complete list of accessories is indicated in the terminal block datasheet including end stops.
Some accessories such as jumper bars may modify the terminal block's ratings: Complete information available in the accessories section of the catalog.

1SNK162070S0201

Technical data valid for copper conductors only.

ZK2.5-SF PI-Spring terminal blocks
For 5x20 fuses - 6 mm 0.236 in spacing

2.5 mm²
12 AWG

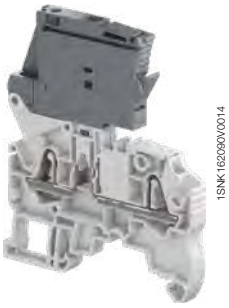

ZK2.5-SF

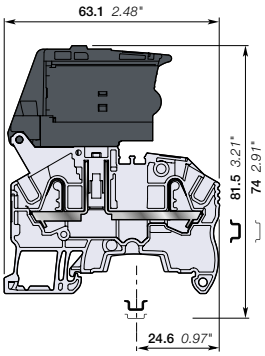

6 mm 0.236 in spacing

Description

Protect your circuits with 5x20 fuse terminal blocks compliant with IEC 60947-7-3 standard (fuse not supplied with the terminal blocks),

– Simplify the distribution thanks to the 2 jumper channels aligned with ZK4-3P feed-through and ZK2.5-S-R1 disconnect terminal blocks.

Ordering details

Description	Color	Type	Part Number		Pkg qty	Weight (1 pce) g
Fuse	Grey, dark grey	ZK2.5-SF	1SNK706410R0000		50	16.20

Main technical data

Connecting capacity		IEC	UL - CSA
1 conductor per clamp	Rigid: Solid/Stranded	0.2 ... 4 mm²	26 ... 12 AWG
	Flexible without ferrule	0.22 ... 2.5 mm²	
	Flexible with non insulated ferrule	0.22 ... 2.5 mm²	26 ... 14 AWG
	Flexible with insulated ferrule	0.22 ... 2.5 mm²	26 ... 14 AWG
2 conductors per clamp	Flexible with twin ferrule	0.22 ... 0.5 mm²	26 ... 20 AWG
Rated current / Rated cross section		6.3 A / 2.5 mm²	16 A / 12 AWG
Rated short-time withstand current (1s)			396 A
Rated voltage		500 V	300 V
Impulse withstand voltage		6000 V	
Protection		IP20	NEMA 1

Mounting instructions

Rail		TH 35-7.5, TH 35-15
Wire stripping length		11 mm 0.433 in
Tool (for flexible conductor without ferrule)		Flat screwdriver Ø 3.5 mm Ø 0.138 in

The fuse holder must be first disconnected prior any fuse replacement. Mount your fuse safely without touching any active part: put the fuse into the hooks of the fuse holder shutter; at the closing of the shutter, the fuse is perfectly in place in the fuse holder.

Separate arrangement		Assembly composed of 1 fuse terminal block in between non fuse terminal blocks	Overload and short-circuit protection	2.5 W
			Exclusive short-circuit protection	4 W
Compound arrangement		Assembly composed of 5 fuse terminal blocks	Overload and short-circuit protection	1.6 W
			Exclusive short-circuit protection	4 W

The connecting capacity data for one Rigid: Solid/Stranded, or one Flexible conductor (when applicable) is a mandatory information required by IEC, UL and CSA standards (Copper conductors). All other data are provided as supplementary information only. For more details, please consult our CB, UL or CSA certificates and technical datasheet available on http://www.TE.com

CE | CB | RoHS | USR CNR | CSA | EAC | BV | DNV

Accessories

	Description			Color	Type	Part Number		Pkg qty	Weight (1 pce) g
1	End stops	5.2 mm	0.205 in	Dark grey	BAZ1	1SNK900002R0000		50	5.30
2	End sections	2 mm	0.079 in	Dark grey	EK2.5-3P	1SNK705911R0000		20	2.40
3	Jumper bars	2 poles	41 A (IEC)	Orange	JB6-2	1SNK906302R0000		50	1.30
		3 poles	41 A (IEC)		JB6-3	1SNK906303R0000		50	2.10
		4 poles	41 A (IEC)		JB6-4	1SNK906304R0000		50	2.90
		5 poles	41 A (IEC)		JB6-5	1SNK906305R0000		50	3.60
		10 poles	41 A (IEC)		JB6-10	1SNK906310R0000		20	7.40
		50 poles	41 A (IEC)		JB6-50	1SNK906350R0000		10	38.10
4	Circuit separators	3 mm	0.118 in	Dark grey	CS-R3	1SNK900107R0000		20	6.40
5	Test adapters	For test plugs DIA 2 mm 0.079 in		Dark grey	TP2	1SNK900203R0000		20	1.70
		For test plugs DIA 4 mm 0.157 in			TP4	1SNK900205R0000		20	2.40
6	Test connectors	End module, 5.2 mm 0.205 in		Dark grey	TC5-R1	1SNK900201R0000		10	5.20
7	Spacers	0.8 mm	0.031 in	Dark grey	ES-TC6	1SNK900105R0000		10	0.80
8	Terminal block markers	Blank marker		White	MG-CPM 13 41791	1SNB041791R0612		1680	0.27
		Blank card			MC612	1SNK150000R0000		22	10.00
					MC612PA	1SNK159999R0000		20	11.00

Complete list of accessories is indicated in the terminal block datasheet including end stops.
Some accessories such as jumper bars may modify the terminal block's ratings: Complete information available in the accessories section of the catalog.

1SNK162021S0201

Technical data valid for copper conductors only.

ZK2.5-SF-R PI-Spring terminal blocks

For 5x20 fuses - with blown fuse indicator - 6 mm 0.236 in spacing

2.5 mm²	
12 AWG	

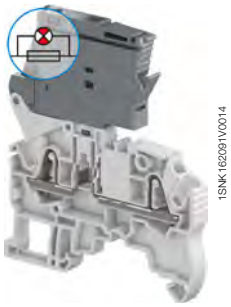

ZK2.5-SF-R

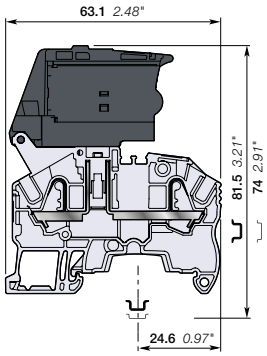

6 mm 0.236 in spacing

Description

- Protect your circuits with 5x20 fuse terminal blocks compliant with IEC 60947-7-3 standard (fuse not supplied with the terminal blocks),
- Simplify the distribution thanks to the 2 jumper channels aligned with ZK4-3P feed-through and ZK2.5-S-R1 disconnect terminal blocks,
- Quickly identify the defective circuit thanks to the blown fuse indicator (with leakage current < 0.5 mA).

Ordering details

Description		Color	Type	Part Number		Pkg qty	Weight (1 pce) g
Fuse	with blown fuse indicator 24 ... 110 V AC / DC	Grey, dark grey	ZK2.5-SF-R1	1SNK706411R0000		50	16.30
	with blown fuse indicator 115 ... 250 V AC / DC		ZK2.5-SF-R3	1SNK706412R0000		50	16.30

Main technical data

Connecting capacity		IEC	UL - CSA
1 conductor per clamp	Rigid: Solid/Stranded	0.2 ... 4 mm²	26 ... 12 AWG
	Flexible without ferrule	0.22 ... 2.5 mm²	
	Flexible with non insulated ferrule	0.22 ... 2.5 mm²	26 ... 14 AWG
	Flexible with insulated ferrule	0.22 ... 2.5 mm²	26 ... 14 AWG
2 conductors per clamp	Flexible with twin ferrule	0.22 ... 0.5 mm²	26 ... 20 AWG
Rated current / Rated cross section		6.3 A / 2.5 mm²	16 A / 12 AWG
Rated short-time withstand current (1s)			396 A
Rated voltage		500 V	300 V
Impulse withstand voltage		6000 V	
Protection		IP20	NEMA 1

Mounting instructions

Rail		TH 35-7.5, TH 35-15
Wire stripping length		11 mm 0.433 in
Tool (for flexible conductor without ferrule)		Flat screwdriver Ø 3.5 mm Ø 0.138 in

The fuse holder must be first disconnected prior any fuse replacement. Mount your fuse safely without touching any active part: put the fuse into the hooks of the fuse holder shutter; at the closing of the shutter, the fuse is perfectly in place in the fuse holder.

Separate arrangement	Assembly composed of 1 fuse terminal block in between non fuse terminal blocks	Overload and short-circuit protection	2.5 W
		Exclusive short-circuit protection	4 W
Compound arrangement	Assembly composed of 5 fuse terminal blocks	Overload and short-circuit protection	1.6 W
		Exclusive short-circuit protection	4 W

The connecting capacity data for one Rigid: Solid/Stranded, or one Flexible conductor (when applicable) is a mandatory information required by IEC, UL and CSA standards (Copper conductors). All other data are provided as supplementary information only. For more details, please consult our CB, UL or CSA certificates and technical datasheet available on http://www.TE.com

CE CB RoHS USR CNR CSA EAC BV DNV

Accessories

	Description			Color	Type	Part Number		Pkg qty	Weight (1 pce) g
1	**End stops**	5.2 mm	0.205 in	Dark grey	BAZ1	1SNK900002R0000		50	5.30
2	**End sections**	2 mm	0.079 in	Dark grey	EK2.5-3P	1SNK705911R0000		20	2.40
3	**Jumper bars**	2 poles	41 A (IEC)	Orange	JB6-2	1SNK906302R0000		50	1.30
		3 poles	41 A (IEC)		JB6-3	1SNK906303R0000		50	2.10
		4 poles	41 A (IEC)		JB6-4	1SNK906304R0000		50	2.90
		5 poles	41 A (IEC)		JB6-5	1SNK906305R0000		50	3.60
		10 poles	41 A (IEC)		JB6-10	1SNK906310R0000		20	7.40
		50 poles	41 A (IEC)		JB6-50	1SNK906350R0000		10	38.10
4	**Circuit separators**	3 mm	0.118 in	Dark grey	CS-R3	1SNK900107R0000		20	6.40
5	**Test adapters**	For test plugs DIA 2 mm 0.079 in		Dark grey	TP2	1SNK900203R0000		20	1.70
		For test plugs DIA 4 mm 0.157 in			TP4	1SNK900205R0000		20	2.40
6	**Test connectors**	End module, 5.2 mm 0.205 in		Dark grey	TC5-R1	1SNK900201R0000		10	5.20
7	**Spacers**	0.8 mm	0.031 in	Dark grey	ES-TC6	1SNK900105R0000		10	0.80
8	**Terminal block markers**	Blank marker		White	MG-CPM 13 41791	1SNB041791R0612		1680	0.27
		Blank card			MC612	1SNK150000R0000		22	10.00
					MC612PA	1SNK159999R0000		20	11.00

Complete list of accessories is indicated in the terminal block datasheet including end stops.
Some accessories such as jumper bars may modify the terminal block's ratings: Complete information available in the accessories section of the catalog.

1SNK162022S0201

Technical data valid for copper conductors only.

ZK2.5-D2 PI-Spring terminal blocks

Double deck with 2 feed-through circuits - 5.2 mm 0.205 in spacing

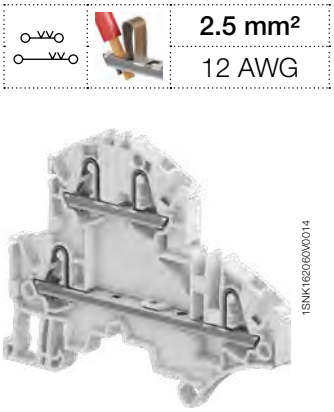

2.5 mm²	
12 AWG	

1SNK162060V0014

ZK2.5-D2

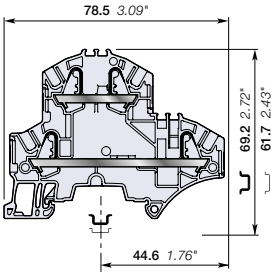

5.2 mm 0.205 in spacing

Description

Combine high performance with compact dimensions:

- 800 V IEC 600 V UL,
- 2 jumper channels and a large input and output marker zone on each deck.

Ordering details

Description		Color	Type	Part Number		Pkg qty	Weight (1 pce) g
Feed-through	2 feed-through circuits	Grey	ZK2.5-D2	1SNK705210R0000		50	11.20
		Blue	ZK2.5-D2-BL	1SNK705220R0000		50	11.20

Main technical data

Connecting capacity		IEC	UL - CSA
1 conductor per clamp	Rigid: Solid/Stranded	0.2 ... 4 mm²	26 ... 12 AWG
	Flexible without ferrule	0.22 ... 2.5 mm²	
	Flexible with non insulated ferrule	0.22 ... 2.5 mm²	26 ... 14 AWG
	Flexible with insulated ferrule	0.22 ... 2.5 mm²	26 ... 14 AWG
2 conductors per clamp	Flexible with twin ferrule	0.22 ... 0.5 mm²	26 ... 20 AWG
Rated current / Rated cross section		24 A / 2.5 mm²	20 A / 12 AWG
Rated short-time withstand current (1s)		300 A	396 A
Short Circuit Current Rating (with specific conditions)			100 kA
Rated voltage		800 V	600 V
Impulse withstand voltage		8000 V	
Protection		IP20	NEMA 1
Increased safety Ex e		693 V 21 A IEC/EN 60079-7 - IM2 II 2 GD Ex eb I/IIC/IIIC	

Mounting instructions

Rail		TH 35-7.5, TH 35-15
Wire stripping length		11 mm 0.433 in
Tool (for flexible conductor without ferrule)		Flat screwdriver Ø 3.5 mm Ø 0.138 in

The connecting capacity data for one Rigid: Solid/Stranded, or one Flexible conductor (when applicable) is a mandatory information required by IEC, UL and CSA standards (Copper conductors). All other data are provided as supplementary information only. For more details, please consult our CB, UL or CSA certificates and technical datasheet available on http://www.TE.com

CE, CB, RoHS, USR CNR, CSA, EAC Ex, ATEX, IECEx, Haz Loc, BV, DNV

Accessories

	Description			Color	Type	Part Number		Pkg qty	Weight (1 pce) g
1	**End stops**	10 mm	0.394 in	Dark grey	BAZH1	1SNK900102R0000		20	24.00
2	**End sections**	2 mm	0.079 in	Dark grey	EK2.5-D2	1SNK705960R0000		20	3.40
3	**Jumper bars**	2 poles	32 A (IEC)	Orange	JB5-2	1SNK905302R0000		50	1.30
		3 poles	32 A (IEC)		JB5-3	1SNK905303R0000		50	2.00
		4 poles	32 A (IEC)		JB5-4	1SNK905304R0000		50	2.70
		5 poles	32 A (IEC)		JB5-5	1SNK905305R0000		50	3.50
		10 poles	32 A (IEC)		JB5-10	1SNK905310R0000		30	7.10
		50 poles	32 A (IEC)		JB5-50	1SNK905350R0000		10	36.00
4	**Test adapters**	For test plugs DIA 2 mm 0.079 in		Dark grey	TP2	1SNK900203R0000		20	1.70
		For test plugs DIA 4 mm 0.157 in			TP4	1SNK900205R0000		20	2.40
5	**Test connectors**	5.2 mm 0.205 in spacing		Dark grey	TC5	1SNK900200R0000		10	5.20
		End module, 5.2 mm 0.205 in			TC5-R1	1SNK900201R0000		10	5.20
6	**Shield connectors**				SHB	1SNK900602R0000		20	4.90
7	**Label holders**			Dark grey	LH-J	1SNK900606R0000		100	0.73
8	**Terminal block markers**	Blank marker		White	MG-CPM 13 41790	1SNB041790R0512		1960	0.23
		Blank card			MC512	1SNK140000R0000		22	9.00
					MC512PA	1SNK149999R0000		20	10.00
		Universal wire markers holder		Grey	UMH	1SNK900611R0000		10	0.20

Complete list of accessories is indicated in the terminal block datasheet including end stops.
Some accessories such as jumper bars may modify the terminal block's ratings: Complete information available in the accessories section of the catalog.

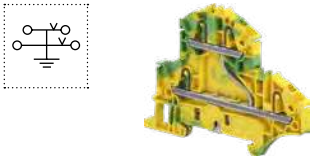

Ground PI-Spring terminal blocks

Description		Color	Type	Part Number		Pkg qty	Weight (1 pce) g
Ground	Profile aligned with ZK2.5-D2 and ZK2.5-D1	Green-yellow	ZK2.5-D1-PE	1SNK705250R0000		20	15.70

1SNK162033S0201

Technical data valid for copper conductors only.

ZK2.5-D1 PI-Spring terminal blocks

Double deck with 1 feed-through circuit - 5.2 mm 0.205 in spacing

1SNK162078V0014

ZK2.5-D1

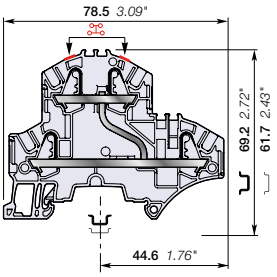

5.2 mm 0.205 in spacing

2.5 mm²
12 AWG

Description

– Find the same functionalities as ZK2.5-D2 and ease one potential distribution on 4 independent connections.

Ordering details

Description		Color	Type	Part Number		Pkg qty	Weight (1 pce) g
Feed-through	1 feed-through circuit	Grey	ZK2.5-D1	1SNK705211R0000		50	11.20

Main technical data

Connecting capacity		IEC	UL - CSA
1 conductor per clamp	Rigid: Solid/Stranded	0.2 ... 4 mm²	26 ... 12 AWG
	Flexible without ferrule	0.22 ... 2.5 mm²	
	Flexible with non insulated ferrule	0.22 ... 2.5 mm²	26 ... 14 AWG
	Flexible with insulated ferrule	0.22 ... 2.5 mm²	26 ... 14 AWG
2 conductors per clamp	Flexible with twin ferrule	0.22 ... 0.5 mm²	26 ... 20 AWG
Rated current / Rated cross section		24 A / 2.5 mm²	20 A / 12 AWG
Rated short-time withstand current (1s)		300 A	396 A
Short Circuit Current Rating (with specific conditions)			100 kA
Rated voltage		800 V	600 V
Impulse withstand voltage		8000 V	
Protection		IP20	NEMA 1
Increased safety Ex e		693 V 21 A IEC/EN 60079-7 - IM2 II 2 GD Ex eb I/IIC/IIIC	

Mounting instructions

Rail		TH 35-7.5, TH 35-15
Wire stripping length		11 mm 0.433 in
Tool (for flexible conductor without ferrule)		Flat screwdriver Ø 3.5 mm Ø 0.138 in

The connecting capacity data for one Rigid: Solid/Stranded, or one Flexible conductor (when applicable) is a mandatory information required by IEC, UL and CSA standards (Copper conductors). All other data are provided as supplementary information only. For more details, please consult our CB, UL or CSA certificates and technical datasheet available on http://www.TE.com

CE, CB, RoHS, USR CNR, CSA, EAC Ex, ATEX, IECEx, Haz Loc, BV, DNV

Accessories

	Description			Color	Type	Part Number		Pkg qty	Weight (1 pce) g
1	**End stops**	10 mm	0.394 in	Dark grey	BAZH1	1SNK900102R0000		20	24.00
2	**End sections**	2 mm	0.079 in	Dark grey	EK2.5-D2	1SNK705960R0000		20	3.40
3	**Jumper bars**	2 poles	32 A (IEC)	Orange	JB5-2	1SNK905302R0000		50	1.30
		3 poles	32 A (IEC)		JB5-3	1SNK905303R0000		50	2.00
		4 poles	32 A (IEC)		JB5-4	1SNK905304R0000		50	2.70
		5 poles	32 A (IEC)		JB5-5	1SNK905305R0000		50	3.50
		10 poles	32 A (IEC)		JB5-10	1SNK905310R0000		30	7.10
		50 poles	32 A (IEC)		JB5-50	1SNK905350R0000		10	36.00
4	**Test adapters**	For test plugs DIA 2 mm 0.079 in		Dark grey	TP2	1SNK900203R0000		20	1.70
		For test plugs DIA 4 mm 0.157 in			TP4	1SNK900205R0000		20	2.40
5	**Test connectors**	5.2 mm 0.205 in spacing		Dark grey	TC5	1SNK900200R0000		10	5.20
		End module, 5.2 mm 0.205 in			TC5-R1	1SNK900201R0000		10	5.20
6	**Shield connectors**				SHB	1SNK900602R0000		20	4.90
7	**Label holders**			Dark grey	LH-J	1SNK900606R0000		100	0.73
8	**Terminal block markers**	Blank marker		White	MG-CPM 13 41790	1SNB041790R0512		1960	0.23
		Blank card			MC512	1SNK140000R0000		22	9.00
					MC512PA	1SNK149999R0000		20	10.00
		Universal wire markers holder		Grey	UMH	1SNK900611R0000		10	0.20

Complete list of accessories is indicated in the terminal block datasheet including end stops.
Some accessories such as jumper bars may modify the terminal block's ratings: Complete information available in the accessories section of the catalog.

Ground PI-Spring terminal blocks

Description		Color	Type	Part Number		Pkg qty	Weight (1 pce) g
Ground	Profile aligned with ZK2.5-D2 and ZK2.5-D1	Green-yellow	ZK2.5-D1-PE	1SNK705250R0000		20	15.70

1SNK162035S0201

Technical data valid for copper conductors only.

ZK2.5-D2-PE PI-Spring terminal blocks

Double deck with 1 feed-through circuit and 1 ground circuit - 5.2 mm 0.205 in spacing

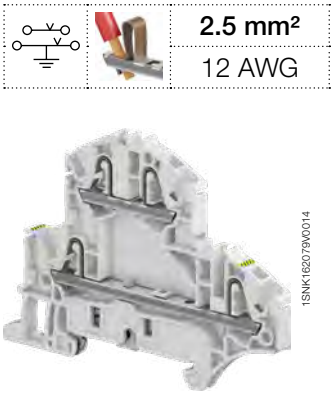

2.5 mm²
12 AWG

1SNK162079W0014

ZK2.5-D2-PE

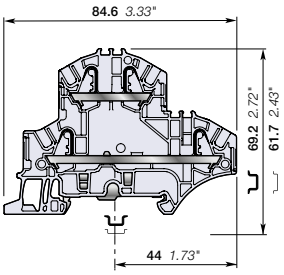

5.2 mm 0.205 in spacing

Description

Combine high performance with compact dimensions:

- 800 V IEC 600 V UL,
- 1 feed through circuit and 1 ground circuit in just 5.2 mm 0.205 in spacing,
- 2 jumper channels and a large input and output marker zone on each deck,
- designed for easy wiring.

Ordering details

Description		Color	Type	Part Number		Pkg qty	Weight (1 pce) g
Feed-through + ground	1 feed-through circuit and 1 ground circuit	Grey, Green-yellow	ZK2.5-D2-PE	1SNK705212R0000		20	15.70

Main technical data

Connecting capacity		IEC	UL - CSA
1 conductor per clamp	Rigid: Solid/Stranded	0.2 ... 4 mm²	26 ... 12 AWG
	Flexible without ferrule	0.22 ... 2.5 mm²	
	Flexible with non insulated ferrule	0.22 ... 2.5 mm²	26 ... 14 AWG
	Flexible with insulated ferrule	0.22 ... 2.5 mm²	26 ... 14 AWG
2 conductors per clamp	Flexible with twin ferrule	0.22 ... 0.5 mm²	26 ... 20 AWG
Rated current / Rated cross section		24 A / 2.5 mm²	20 A / 12 AWG
Rated short-time withstand current (1s)		300 A	396 A
Short Circuit Current Rating (with specific conditions)			
Rated voltage		800 V	600 V
Impulse withstand voltage		8000 V	
Protection		IP20	NEMA 1
Increased safety Ex e		693 V 21 A IEC/EN 60079-7 - IM2 II 2 GD Ex eb I/IIC/IIIC	

Mounting instructions

Rail		TH 35-7.5, TH 35-15
Wire stripping length		11 mm 0.433 in
Tool (for flexible conductor without ferrule)		Flat screwdriver Ø 3.5 mm Ø 0.138 in

The connecting capacity data for one Rigid: Solid/Stranded, or one Flexible conductor (when applicable) is a mandatory information required by IEC, UL and CSA standards (Copper conductors). All other data are provided as supplementary information only. For more details, please consult our CB, UL or CSA certificates and technical datasheet available on http://www.TE.com

CE, CB, RoHS, USR CNR, CSA, EAC Ex, ATEX, IECEx, Haz Loc, BV, DNV

Accessories

	Description			Color	Type	Part Number		Pkg qty	Weight (1 pce) g
1	**End stops**	10 mm	0.394 in	Dark grey	BAZH1	1SNK900102R0000		20	24.00
2	**End sections**	2 mm	0.079 in	Dark grey	EK2.5-D2	1SNK705960R0000		20	3.40
3	**Jumper bars**	2 poles	32 A (IEC)	Orange	JB5-2	1SNK905302R0000		50	1.30
		3 poles	32 A (IEC)		JB5-3	1SNK905303R0000		50	2.00
		4 poles	32 A (IEC)		JB5-4	1SNK905304R0000		50	2.70
		5 poles	32 A (IEC)		JB5-5	1SNK905305R0000		50	3.50
		10 poles	32 A (IEC)		JB5-10	1SNK905310R0000		30	7.10
		50 poles	32 A (IEC)		JB5-50	1SNK905350R0000		10	36.00
4	**Test adapters**	For test plugs DIA 2 mm 0.079 in		Dark grey	TP2	1SNK900203R0000		20	1.70
		For test plugs DIA 4 mm 0.157 in			TP4	1SNK900205R0000		20	2.40
5	**Test connectors**	5.2 mm 0.205 in spacing		Dark grey	TC5	1SNK900200R0000		10	5.20
		End module, 5.2 mm 0.205 in			TC5-R1	1SNK900201R0000		10	5.20
6	**Shield connectors**				SHB	1SNK900602R0000		20	4.90
7	**Label holders**			Dark grey	LH-J	1SNK900606R0000		100	0.73
8	**Terminal block markers**	Blank marker		White	MG-CPM 13 41790	1SNB041790R0512		1960	0.23
		Blank card			MC512	1SNK140000R0000		22	9.00
					MC512PA	1SNK149999R0000		20	10.00
		Universal wire markers holder		Grey	UMH	1SNK900611R0000		10	0.20

Complete list of accessories is indicated in the terminal block datasheet including end stops.
Some accessories such as jumper bars may modify the terminal block's ratings: Complete information available in the accessories section of the catalog.

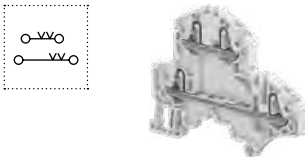

Feed-through PI-Spring terminal blocks

Description	Color	Type	Part Number		Pkg qty	Weight (1 pce) g
Feed-through	Grey	ZK2.5-D2	1SNK705210R0000		50	11.20

1SNK162034S0201

Technical data valid for copper conductors only.

ZK2.5-D1-PE PI-Spring terminal blocks

Double deck with 1 ground circuit - 5.2 mm 0.205 in spacing

2.5 mm²
12 AWG

1SNK162080V0014

ZK2.5-D1-PE

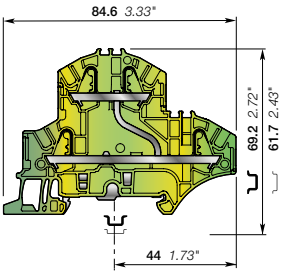

5.2 mm 0.205 in spacing

Description

Improve the safety of your installation in the event of a short-circuit thanks to our screwless rail contact:

- Rail contact non operator dependent,
- Performances above the requirements of the IEC 60947-7-2 terminal block standard,
- Secured snap on or off the rail,
- Profile aligned with ZK2.5-D2.

Ordering details

Description		Color	Type	Part Number		Pkg qty	Weight (1 pce) g
Ground	1 ground circuit	Green-yellow	ZK2.5-D1-PE	1SNK705250R0000		20	15.70

Main technical data

Connecting capacity		IEC	UL - CSA
1 conductor per clamp	Rigid: Solid/Stranded	0.2 ... 4 mm²	26 ... 12 AWG
	Flexible without ferrule	0.22 ... 2.5 mm²	
	Flexible with non insulated ferrule	0.22 ... 2.5 mm²	26 ... 14 AWG
	Flexible with insulated ferrule	0.22 ... 2.5 mm²	26 ... 14 AWG
Rated cross section		2.5 mm²	12 AWG
Rated short-time withstand current (1s)		300 A	396 A
Protection		IP20	NEMA 1
Explosive atmosphere classification		IM2 II 2 GD Ex eb I/IIC/IIIC – Class I, Zone 1, AEx e II, Ex e II U	

Mounting instructions

Rail		TH 35-7.5, TH 35-15
Wire stripping length		11 mm 0.433 in
Tool (for flexible conductor without ferrule)		Flat screwdriver Ø 3.5 mm Ø 0.138 in

The connecting capacity data for one Rigid: Solid/Stranded, or one Flexible conductor (when applicable) is a mandatory information required by IEC, UL and CSA standards (Copper conductors). All other data are provided as supplementary information only. For more details, please consult our CB, UL or CSA certificates and technical datasheet available on http://www.TE.com

CE, CB, RoHS, USR CNR, CSA, EAC Ex, ATEX, IECEx, Haz Loc, BV, DNV

Accessories

	Description			Color	Type	Part Number		Pkg qty	Weight (1 pce) g
1	**End stops**	10 mm	0.394 in	Dark grey	BAZH1	1SNK900102R0000		20	24.00
2	**End sections**	2 mm	0.079 in	Dark grey	EK2.5-D2	1SNK705960R0000		20	3.40
3	**Test adapters**	For test plugs DIA 2 mm 0.079 in		Dark grey	TP2	1SNK900203R0000		20	1.70
		For test plugs DIA 4 mm 0.157 in			TP4	1SNK900205R0000		20	2.40
4	**Test connectors**	5.2 mm 0.205 in spacing		Dark grey	TC5	1SNK900200R0000		10	5.20
		End module, 5.2 mm 0.205 in			TC5-R1	1SNK900201R0000		10	5.20
5	**Shield connectors**				SHB	1SNK900602R0000		20	4.90
6	**Label holders**			Dark grey	LH-J	1SNK900606R0000		100	0.73
7	**Terminal block markers**	Blank marker		White	MG-CPM 13 41790	1SNB041790R0512		1960	0.23
		Blank card			MC512	1SNK140000R0000		22	9.00
					MC512PA	1SNK149999R0000		20	10.00
		Universal wire markers holder		Grey	UMH	1SNK900611R0000		10	0.20

Complete list of accessories is indicated in the terminal block datasheet including end stops.
Some accessories such as jumper bars may modify the terminal block's ratings: Complete information available in the accessories section of the catalog.

1SNK162049S0201

Technical data valid for copper conductors only.

ZK2.5-T3 PI-Spring terminal blocks

Triple deck with 3 feed-through circuits - 5.2 mm 0.205 in spacing

2.5 mm²
12 AWG

1SNK162109V0014

ZK2.5-T3

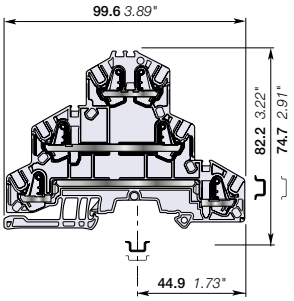

5.2 mm 0.205 in spacing

Description

Combine high performance with compact dimensions in just 5.2 mm 0.205 in spacing:
- 500 V IEC 300 V UL,
- 1 jumper channel and a large input and output marker zone on each deck.

Ordering details

Description		Color	Type	Part Number		Pkg qty	Weight (1 pce) g
Feed-through	3 feed-through circuits	Grey	ZK2.5-T3	1SNK705510R0000		25	17.33

Main technical data

Connecting capacity		IEC	UL - CSA
1 conductor per clamp	Rigid: Solid/Stranded	0.2 ... 4 mm²	26 ... 12 AWG
	Flexible without ferrule	0.22 ... 2.5 mm²	
	Flexible with non insulated ferrule	0.22 ... 2.5 mm²	26 ... 14 AWG
	Flexible with insulated ferrule	0.22 ... 2.5 mm²	26 ... 14 AWG
2 conductors per clamp	Flexible with twin ferrule	0.22 ... 0.5 mm²	26 ... 20 AWG
Rated current / Rated cross section		22 A / 2.5 mm²	20 A / 12 AWG
Rated short-time withstand current (1s)		300 A	
Short Circuit Current Rating (with specific conditions)			
Rated voltage		500 V	300 V
Impulse withstand voltage		8000 V	
Protection		IP20	NEMA 1
Increased safety Ex e		440 V 20 A IEC/EN 60079-7 - IM2 II 2 GD Ex eb I/IIC/IIIC	

Mounting instructions

Rail		TH 35-7.5, TH 35-15
Wire stripping length		11 mm 0.433 in
Tool (for flexible conductor without ferrule)		Flat screwdriver Ø 3.5 mm Ø 0.138 in

The connecting capacity data for one Rigid: Solid/Stranded, or one Flexible conductor (when applicable) is a mandatory information required by IEC, UL and CSA standards (Copper conductors). All other data are provided as supplementary information only. For more details, please consult our CB, UL or CSA certificates and technical datasheet available on http://www.TE.com

CE, CB, RoHS, USR CNR, CSA, EAC, ATEX, IECEx, BV

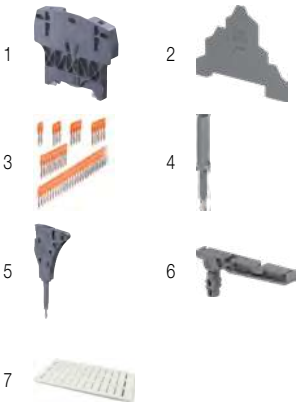

Accessories

	Description			Color	Type	Part Number		Pkg qty	Weight (1 pce) g
1	**End stops**	10 mm	0.394 in	Dark grey	BAZH1	1SNK900102R0000		20	24.00
2	**End sections**	0.8 mm	0.031 in	Dark grey	EK2.5-T3	1SNK705961R0000		20	4.76
3	**Jumper bars**	2 poles	32 A (IEC)	Orange	JB5-2	1SNK905302R0000		50	1.30
		3 poles	32 A (IEC)		JB5-3	1SNK905303R0000		50	2.00
		4 poles	32 A (IEC)		JB5-4	1SNK905304R0000		50	2.70
		5 poles	32 A (IEC)		JB5-5	1SNK905305R0000		50	3.50
		10 poles	32 A (IEC)		JB5-10	1SNK905310R0000		30	7.10
		50 poles	32 A (IEC)		JB5-50	1SNK905350R0000		10	36.00
4	**Test adapters**	For test plugs DIA 2 mm 0.079 in		Dark grey	TP2	1SNK900203R0000		20	1.70
		For test plugs DIA 4 mm 0.157 in			TP4	1SNK900205R0000		20	2.40
5	**Test connectors**	5.2 mm 0.205 in spacing		Dark grey	TC5	1SNK900200R0000		10	5.20
		End module, 5.2 mm 0.205 in			TC5-R1	1SNK900201R0000		10	5.20
6	**Label holders**			Dark grey	LH-J	1SNK900606R0000		100	0.73
7	**Terminal block markers**	Blank marker		White	MG-CPM 13 41790	1SNB041790R0512		1960	0.23
		Blank card			MC512	1SNK140000R0000		22	9.00
					MC512PA	1SNK149999R0000		20	10.00
		Universal wire markers holder		Grey	UMH	1SNK900611R0000		10	0.20

Complete list of accessories is indicated in the terminal block datasheet including end stops.
Some accessories such as jumper bars may modify the terminal block's ratings: Complete information available in the accessories section of the catalog.

Ground PI-Spring terminal blocks

Description	Color	Type	Part Number		Pkg qty	Weight (1 pce) g
Ground	Green-yellow	ZK2.5-T1-PE	1SNK705550R0000		25	21.53

1SNK162075S0201

Technical data valid for copper conductors only.

ZK2.5-T1 PI-Spring terminal blocks

Triple deck with 1 feed-through circuit - 5.2 mm 0.205 in spacing

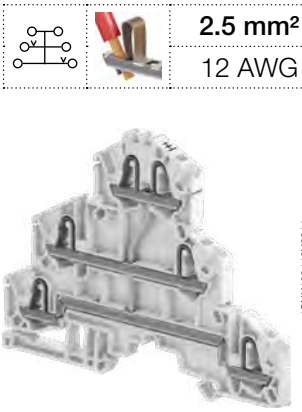

2.5 mm²
12 AWG

1SNK162110V0014

ZK2.5-T1

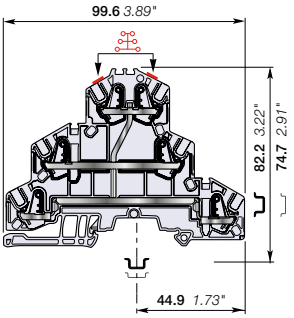

5.2 mm 0.205 in spacing

Description

Find the same functionalities as ZK2.5-T3 and ease one potential distribution on 6 independent connections.

Ordering details

Description		Color	Type	Part Number		Pkg qty	Weight (1 pce) g
Feed-through	1 feed-through circuit	Grey	ZK2.5-T1	1SNK705511R0000		25	17.33

Main technical data

Connecting capacity		IEC	UL - CSA
1 conductor per clamp	Rigid: Solid/Stranded	0.2 ... 4 mm²	26 ... 12 AWG
	Flexible without ferrule	0.22 ... 2.5 mm²	
	Flexible with non insulated ferrule	0.22 ... 2.5 mm²	26 ... 14 AWG
	Flexible with insulated ferrule	0.22 ... 2.5 mm²	26 ... 14 AWG
2 conductors per clamp	Flexible with twin ferrule	0.22 ... 0.5 mm²	26 ... 20 AWG
Rated current / Rated cross section		22 A / 2.5 mm²	20 A / 12 AWG
Rated short-time withstand current (1s)		300 A	
Short Circuit Current Rating (with specific conditions)			
Rated voltage		500 V	300 V
Impulse withstand voltage		8000 V	
Protection		IP20	NEMA 1
Increased safety Ex e		440 V 20 A IEC/EN 60079-7 - IM2 II 2 GD Ex eb I/IIC/IIIC	

The connecting capacity data for one Rigid: Solid/Stranded, or one Flexible conductor (when applicable) is a mandatory information required by IEC, UL and CSA standards (Copper conductors). All other data are provided as supplementary information only. For more details, please consult our CB, UL or CSA certificates and technical datasheet available on http://www.TE.com

CE, CB, RoHS, USR CNR, CSA, EAC, ATEX, IECEx, BV

Mounting instructions

Rail		TH 35-7.5, TH 35-15
Wire stripping length		11 mm 0.433 in
Tool (for flexible conductor without ferrule)		Flat screwdriver Ø 3.5 mm Ø 0.138 in

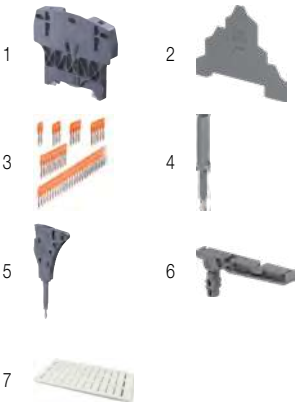

Accessories

	Description			Color	Type	Part Number		Pkg qty	Weight (1 pce) g
1	**End stops**	10 mm	0.394 in	Dark grey	BAZH1	1SNK900102R0000		20	24.00
2	**End sections**	0.8 mm	0.031 in	Dark grey	EK2.5-T3	1SNK705961R0000		20	4.76
3	**Jumper bars**	2 poles	32 A (IEC)	Orange	JB5-2	1SNK905302R0000		50	1.30
		3 poles	32 A (IEC)		JB5-3	1SNK905303R0000		50	2.00
		4 poles	32 A (IEC)		JB5-4	1SNK905304R0000		50	2.70
		5 poles	32 A (IEC)		JB5-5	1SNK905305R0000		50	3.50
		10 poles	32 A (IEC)		JB5-10	1SNK905310R0000		30	7.10
		50 poles	32 A (IEC)		JB5-50	1SNK905350R0000		10	36.00
4	**Test adapters**	For test plugs DIA 2 mm 0.079 in		Dark grey	TP2	1SNK900203R0000		20	1.70
		For test plugs DIA 4 mm 0.157 in			TP4	1SNK900205R0000		20	2.40
5	**Test connectors**	5.2 mm 0.205 in spacing		Dark grey	TC5	1SNK900200R0000		10	5.20
		End module, 5.2 mm 0.205 in			TC5-R1	1SNK900201R0000		10	5.20
6	**Label holders**			Dark grey	LH-J	1SNK900606R0000		100	0.73
7	**Terminal block markers**	Blank marker		White	MG-CPM 13 41790	1SNB041790R0512		1960	0.23
		Blank card			MC512	1SNK140000R0000		22	9.00
					MC512PA	1SNK149999R0000		20	10.00
		Universal wire markers holder		Grey	UMH	1SNK900611R0000		10	0.20

Complete list of accessories is indicated in the terminal block datasheet including end stops.
Some accessories such as jumper bars may modify the terminal block's ratings: Complete information available in the accessories section of the catalog.

Ground PI-Spring terminal blocks

Description	Color	Type	Part Number		Pkg qty	Weight (1 pce) g
Ground	Green-yellow	ZK2.5-T1-PE	1SNK705550R0000		25	21.53

1SNK162076S0201

Technical data valid for copper conductors only.

ZK2.5-L-L-PE PI-Spring terminal blocks

Triple deck with 2 feed-through circuits and 1 ground circuit - 5.2 mm 0.205 in spacing

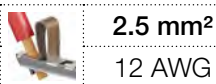

2.5 mm²
12 AWG

1SNK162112V0014

ZK2.5-L-L-PE

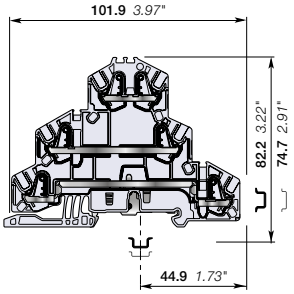

5.2 mm 0.205 in spacing

Description

Combine high performance with compact dimensions:
- 500V IEC 300 V UL,
- 2 feed through circuits and 1 ground circuit in just 5.2 mm 0.205 in spacing,
- 1 jumper channel and a large input and output marker zone on each deck,
- designed for easy wiring.

Ordering details

Description		Color	Type	Part Number		Pkg qty	Weight (1 pce) g
Feed-through + ground	2 feed-through circuits and 1 ground circuit	Grey, Green-yellow	ZK2.5-L-L-PE	1SNK705512R0000		25	21.38

Main technical data

Connecting capacity		IEC	UL - CSA
1 conductor per clamp	Rigid: Solid/Stranded	0.2 ... 4 mm²	26 ... 12 AWG
	Flexible without ferrule	0.22 ... 2.5 mm²	
	Flexible with non insulated ferrule	0.22 ... 2.5 mm²	26 ... 14 AWG
	Flexible with insulated ferrule	0.22 ... 2.5 mm²	26 ... 14 AWG
2 conductors per clamp	Flexible with twin ferrule	0.22 ... 0.5 mm²	26 ... 20 AWG
Rated current / Rated cross section		22 A / 2.5 mm²	20 A / 12 AWG
Rated short-time withstand current (1s)		300 A	396 A
Short Circuit Current Rating (with specific conditions)			
Rated voltage		500 V	300 V
Impulse withstand voltage		8000 V	
Protection		IP20	NEMA 1
Increased safety Ex e		440 V 20 A IEC/EN 60079-7 - IM2 II 2 GD Ex eb I/IIC/IIIC	

Mounting instructions

Rail		TH 35-7.5, TH 35-15
Wire stripping length		11 mm 0.433 in
Tool (for flexible conductor without ferrule)		Flat screwdriver Ø 3.5 mm Ø 0.138 in

The connecting capacity data for one Rigid: Solid/Stranded, or one Flexible conductor (when applicable) is a mandatory information required by IEC, UL and CSA standards (Copper conductors). All other data are provided as supplementary information only. For more details, please consult our CB, UL or CSA certificates and technical datasheet available on http://www.TE.com

CE, CB, RoHS, USR CNR, CSA, EAC, ATEX, IECEx, BV

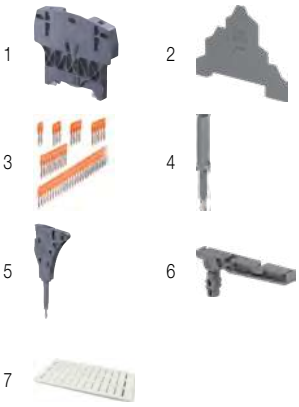

Accessories

	Description			Color	Type	Part Number		Pkg qty	Weight (1 pce) g
1	**End stops**	10 mm	0.394 in	Dark grey	BAZH1	1SNK900102R0000		20	24.00
2	**End sections**	0.8 mm	0.031 in	Dark grey	EK2.5-T3	1SNK705961R0000		20	4.76
3	**Jumper bars**	2 poles	32 A (IEC)	Orange	JB5-2	1SNK905302R0000		50	1.30
		3 poles	32 A (IEC)		JB5-3	1SNK905303R0000		50	2.00
		4 poles	32 A (IEC)		JB5-4	1SNK905304R0000		50	2.70
		5 poles	32 A (IEC)		JB5-5	1SNK905305R0000		50	3.50
		10 poles	32 A (IEC)		JB5-10	1SNK905310R0000		30	7.10
		50 poles	32 A (IEC)		JB5-50	1SNK905350R0000		10	36.00
4	**Test adapters**	For test plugs DIA 2 mm 0.079 in		Dark grey	TP2	1SNK900203R0000		20	1.70
		For test plugs DIA 4 mm 0.157 in			TP4	1SNK900205R0000		20	2.40
5	**Test connectors**	5.2 mm 0.205 in spacing		Dark grey	TC5	1SNK900200R0000		10	5.20
		End module, 5.2 mm 0.205 in			TC5-R1	1SNK900201R0000		10	5.20
6	**Label holders**			Dark grey	LH-J	1SNK900606R0000		100	0.73
7	**Terminal block markers**	Blank marker		White	MG-CPM 13 41790	1SNB041790R0512		1960	0.23
		Blank card			MC512	1SNK140000R0000		22	9.00
					MC512PA	1SNK149999R0000		20	10.00
		Universal wire markers holder		Grey	UMH	1SNK900611R0000		10	0.20

Complete list of accessories is indicated in the terminal block datasheet including end stops.
Some accessories such as jumper bars may modify the terminal block's ratings: Complete information available in the accessories section of the catalog.

Feed-through PI-Spring terminal blocks

Description	Color	Type	Part Number		Pkg qty	Weight (1 pce) g
Feed-through	Grey	ZK2.5-T3	1SNK705510R0000		25	17.33

1SNK162078S0201

Technical data valid for copper conductors only.

ZK2.5-L-N-PE PI-Spring terminal blocks

Triple deck with 2 feed-through circuits and 1 ground circuit - 5.2 mm 0.205 in spacing

2.5 mm²
12 AWG

1SNK162113V0014

ZK2.5-L-N-PE

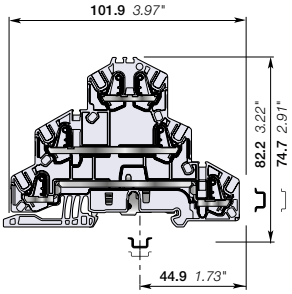

5.2 mm 0.205 in spacing

Description

Combine high performance with compact dimensions:
- 500 V IEC 300 V UL,
- 2 feed through circuits, phase and neutral, and 1 ground circuit in just 5.2 mm 0.205 in spacing,
- 1 jumper channel and a large input and output marker zone on each deck,
- designed for easy wiring.

Ordering details

Description		Color	Type	Part Number		Pkg qty	Weight (1 pce) g
Feed-through + ground	2 feed-through circuits and 1 ground circuit	Blue, grey, Green-yellow	ZK2.5-L-N-PE	1SNK705513R0000		25	21.38

Main technical data

Connecting capacity		IEC	UL - CSA
1 conductor per clamp	Rigid: Solid/Stranded	0.2 ... 4 mm²	26 ... 12 AWG
	Flexible without ferrule	0.22 ... 2.5 mm²	
	Flexible with non insulated ferrule	0.22 ... 2.5 mm²	26 ... 14 AWG
	Flexible with insulated ferrule	0.22 ... 2.5 mm²	26 ... 14 AWG
2 conductors per clamp	Flexible with twin ferrule	0.22 ... 0.5 mm²	26 ... 20 AWG
Rated current / Rated cross section		22 A / 2.5 mm²	20 A / 12 AWG
Rated short-time withstand current (1s)		300 A	396 A
Short Circuit Current Rating (with specific conditions)			
Rated voltage		500 V	300 V
Impulse withstand voltage		8000 V	
Protection		IP20	NEMA 1
Increased safety Ex e		440 V 20 A IEC/EN 60079-7 - IM2 II 2 GD Ex eb I/IIC/IIIC	

Mounting instructions

Rail		TH 35-7.5, TH 35-15
Wire stripping length		11 mm 0.433 in
Tool (for flexible conductor without ferrule)		Flat screwdriver Ø 3.5 mm Ø 0.138 in

The connecting capacity data for one Rigid: Solid/Stranded, or one Flexible conductor (when applicable) is a mandatory information required by IEC, UL and CSA standards (Copper conductors). All other data are provided as supplementary information only. For more details, please consult our CB, UL or CSA certificates and technical datasheet available on http://www.TE.com

CE, CB, RoHS, USR CNR, CSA, EAC, ATEX, IECEx, BV

Accessories

	Description			Color	Type	Part Number		Pkg qty	Weight (1 pce) g
1	**End stops**	10 mm	0.394 in	Dark grey	BAZH1	1SNK900102R0000		20	24.00
2	**End sections**	0.8 mm	0.031 in	Dark grey	EK2.5-T3	1SNK705961R0000		20	4.76
3	**Jumper bars**	2 poles	32 A (IEC)	Orange	JB5-2	1SNK905302R0000		50	1.30
		3 poles	32 A (IEC)		JB5-3	1SNK905303R0000		50	2.00
		4 poles	32 A (IEC)		JB5-4	1SNK905304R0000		50	2.70
		5 poles	32 A (IEC)		JB5-5	1SNK905305R0000		50	3.50
		10 poles	32 A (IEC)		JB5-10	1SNK905310R0000		30	7.10
		50 poles	32 A (IEC)		JB5-50	1SNK905350R0000		10	36.00
4	**Test adapters**	For test plugs DIA 2 mm 0.079 in		Dark grey	TP2	1SNK900203R0000		20	1.70
		For test plugs DIA 4 mm 0.157 in			TP4	1SNK900205R0000		20	2.40
5	**Test connectors**	5.2 mm 0.205 in spacing		Dark grey	TC5	1SNK900200R0000		10	5.20
		End module, 5.2 mm 0.205 in			TC5-R1	1SNK900201R0000		10	5.20
6	**Label holders**			Dark grey	LH-J	1SNK900606R0000		100	0.73
7	**Terminal block markers**	Blank marker		White	MG-CPM 13 41790	1SNB041790R0512		1960	0.23
		Blank card			MC512	1SNK140000R0000		22	9.00
					MC512PA	1SNK149999R0000		20	10.00
		Universal wire markers holder		Grey	UMH	1SNK900611R0000		10	0.20

Complete list of accessories is indicated in the terminal block datasheet including end stops.
Some accessories such as jumper bars may modify the terminal block's ratings: Complete information available in the accessories section of the catalog.

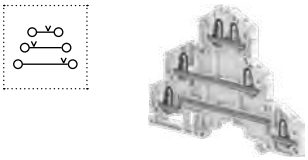

Feed-through PI-Spring terminal blocks

Description	Color	Type	Part Number		Pkg qty	Weight (1 pce) g
Feed-through	Grey	ZK2.5-T3	1SNK705510R0000		25	17.33

1SNK162079S0201

Technical data valid for copper conductors only.

ZK2.5-T1-PE PI-Spring terminal blocks

Triple deck with 1 ground circuit - 5.2 mm 0.205 in spacing

2.5 mm²
12 AWG

1SNK162111V0014

ZK2.5-T1-PE

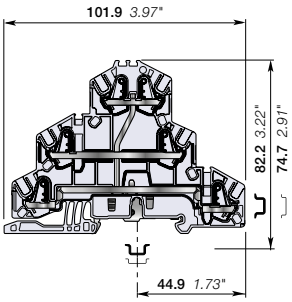

5.2 mm 0.205 in spacing

Description

Improve the safety of your installation in the event of a short-circuit thanks to our screwless rail contact:

- Rail contact non operator dependent,
- Performances above the requirements of the IEC 60947-7-2 terminal block standard,
- Secured snap on or off the rail,
- Profile aligned with ZK2.5-T3,
- 1 jumper channel on bottom and middle decks.

Ordering details

Description		Color	Type	Part Number		Pkg qty	Weight (1 pce) g
Ground	1 ground circuit	Green-yellow	ZK2.5-T1-PE	1SNK705550R0000		25	21.53

Main technical data

Connecting capacity		IEC	UL - CSA
1 conductor per clamp	Rigid: Solid/Stranded	0.2 ... 4 mm²	26 ... 12 AWG
	Flexible without ferrule	0.22 ... 2.5 mm²	
	Flexible with non insulated ferrule	0.22 ... 2.5 mm²	26 ... 14 AWG
	Flexible with insulated ferrule	0.22 ... 2.5 mm²	26 ... 14 AWG
Rated cross section		2.5 mm²	12 AWG
Rated short-time withstand current (1s)		300 A	396 A
Protection		IP20	NEMA 1
Explosive atmosphere classification		IM2 II 2 GD Ex eb I/IIC/IIIC	

Mounting instructions

Rail		TH 35-7.5, TH 35-15
Wire stripping length		11 mm 0.433 in
Tool (for flexible conductor without ferrule)		Flat screwdriver Ø 3.5 mm Ø 0.138 in

The connecting capacity data for one Rigid: Solid/Stranded, or one Flexible conductor (when applicable) is a mandatory information required by IEC, UL and CSA standards (Copper conductors). All other data are provided as supplementary information only. For more details, please consult our CB, UL or CSA certificates and technical datasheet available on http://www.TE.com

CE, CB, RoHS, USR CNR, CSA, EAC, ATEX, IECEx, BV

Accessories

	Description			Color	Type	Part Number		Pkg qty	Weight (1 pce) g
1	End stops	10 mm	0.394 in	Dark grey	BAZH1	1SNK900102R0000		20	24.00
2	End sections	0.8 mm	0.031 in	Dark grey	EK2.5-T3	1SNK705961R0000		20	4.76
3	Test adapters	For test plugs DIA 2 mm 0.079 in		Dark grey	TP2	1SNK900203R0000		20	1.70
		For test plugs DIA 4 mm 0.157 in			TP4	1SNK900205R0000		20	2.40
4	Test connectors	5.2 mm 0.205 in spacing		Dark grey	TC5	1SNK900200R0000		10	5.20
		End module, 5.2 mm 0.205 in			TC5-R1	1SNK900201R0000		10	5.20
5	Label holders			Dark grey	LH-J	1SNK900606R0000		100	0.73
6	Terminal block markers	Blank marker		White	MG-CPM 13 41790	1SNB041790R0512		1960	0.23
		Blank card			MC512	1SNK140000R0000		22	9.00
					MC512PA	1SNK149999R0000		20	10.00
		Universal wire markers holder		Grey	UMH	1SNK900611R0000		10	0.20

Complete list of accessories is indicated in the terminal block datasheet including end stops.
Some accessories such as jumper bars may modify the terminal block's ratings: Complete information available in the accessories section of the catalog.

1SNK162077S0201

Technical data valid for copper conductors only.

ZK2.5-CH-4P-LR PI-Spring terminal blocks
Component holder - 5.2 mm 0.205 in spacing

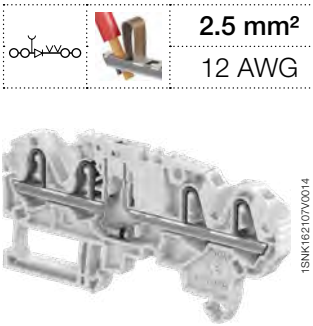

ZK2.5-CH-4P

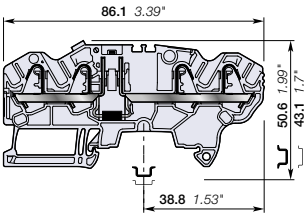

5.2 mm 0.205 in spacing

		2.5 mm²
		12 AWG

Description

- Protect your circuit with one 1N4007 diode,
- Clear identification of the diode orientation with marking identification on the top of the terminal block

Ordering details

Description		Color	Type	Part Number		Pkg qty	Weight (1 pce) g
Component holder	with 1 test socket DIA 2 mm 0.079 in	Grey	ZK2.5-CH-4P-LR	1SNK705710R0000		50	10.91

Main technical data

Connecting capacity		IEC	UL - CSA
1 conductor per clamp	Rigid: Solid/Stranded	0.2 ... 4 mm²	26 ... 12 AWG
	Flexible without ferrule	0.22 ... 2.5 mm²	
	Flexible with non insulated ferrule	0.22 ... 2.5 mm²	26 ... 14 AWG
	Flexible with insulated ferrule	0.22 ... 2.5 mm²	26 ... 14 AWG
2 conductors per clamp	Flexible with twin ferrule	0.22 ... 0.5 mm²	26 ... 20 AWG
Rated current / Rated cross section		1 A / 2.5 mm²	1 A / 12 AWG
Rated short-time withstand current (1s)			
Short Circuit Current Rating (with specific conditions)			
Rated voltage		630 V	300 V
Impulse withstand voltage			
Protection		IP20	NEMA 1

Mounting instructions

Rail		TH 35-7.5, TH 35-15
Wire stripping length		11 mm 0.433 in
Tool (for flexible conductor without ferrule)		Flat screwdriver Ø 3.5 mm Ø 0.138 in

The connecting capacity data for one Rigid: Solid/Stranded, or one Flexible conductor (when applicable) is a mandatory information required by IEC, UL and CSA standards (Copper conductors). All other data are provided as supplementary information only. For more details, please consult our CB, UL or CSA certificates and technical datasheet available on http://www.TE.com

CE | CB | RoHS | USR CNR | CSA | EAC | BV

Accessories

	Description			Color	Type	Part Number		Pkg qty	Weight (1 pce) g
1	**End stops**	5.2 mm	0.205 in	Dark grey	BAZ1	1SNK900002R0000		50	5.30
2	**End sections**	2 mm	0.158 in	Dark grey	EK2.5-S-4P	1SNK705913R0000		20	2.94
3	**Jumper bars**	2 poles	32 A (IEC)	Orange	JB5-2	1SNK905302R0000		50	1.30
		3 poles	32 A (IEC)		JB5-3	1SNK905303R0000		50	2.00
		4 poles	32 A (IEC)		JB5-4	1SNK905304R0000		50	2.70
		5 poles	32 A (IEC)		JB5-5	1SNK905305R0000		50	3.50
		10 poles	32 A (IEC)		JB5-10	1SNK905310R0000		30	7.10
		50 poles	32 A (IEC)		JB5-50	1SNK905350R0000		10	36.00
4	**Circuit separators**	3 mm	0.118 in	Dark grey	CS-R3	1SNK900107R0000		20	6.40
5	**Test adapters**	For test plugs DIA 2 mm 0.079 in		Dark grey	TP2	1SNK900203R0000		20	1.70
		For test plugs DIA 4 mm 0.157 in			TP4	1SNK900205R0000		20	2.40
6	**Test connectors**	5.2 mm 0.205 in spacing		Dark grey	TC5	1SNK900200R0000		10	5.20
		End module, 5.2 mm 0.205 in			TC5-R1	1SNK900201R0000		10	5.20
7	**Terminal block markers**	Blank marker		White	MG-CPM 13 41790	1SNB041790R0512		1960	0.23
		Blank card			MC512	1SNK140000R0000		22	9.00
					MC512PA	1SNK149999R0000		20	10.00
		Universal wire markers holder		Grey	UMH	1SNK900611R0000		10	0.20

Complete list of accessories is indicated in the terminal block datasheet including end stops.
Some accessories such as jumper bars may modify the terminal block's ratings: Complete information available in the accessories section of the catalog.

1SNK162071S0201

Technical data valid for copper conductors only.

ZK2.5-CH-4P-RL PI-Spring terminal blocks
Component holder - 5.2 mm 0.205 in spacing

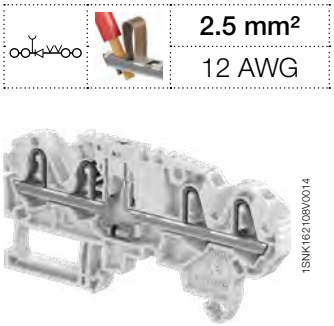

2.5 mm²
12 AWG

ZK2.5-CH-4P

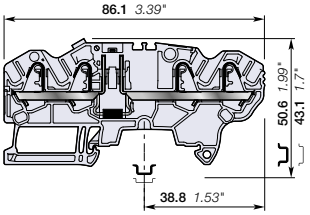

5.2 mm 0.205 in spacing

Description

- Protect your circuit with one 1N4007 diode,
- Clear identification of the diode orientation with marking identification on the top of the terminal block

Ordering details

Description		Color	Type	Part Number		Pkg qty	Weight (1 pce) g
Component holder	with 1 test socket DIA 2 mm 0.079 in	Grey	ZK2.5-CH-4P-RL	1SNK705711R0000		50	10.91

Main technical data

Connecting capacity		IEC	UL - CSA
1 conductor per clamp	Rigid: Solid/Stranded	0.2 ... 4 mm²	26 ... 12 AWG
	Flexible without ferrule	0.22 ... 2.5 mm²	
	Flexible with non insulated ferrule	0.22 ... 2.5 mm²	26 ... 14 AWG
	Flexible with insulated ferrule	0.22 ... 2.5 mm²	26 ... 14 AWG
2 conductors per clamp	Flexible with twin ferrule	0.22 ... 0.5 mm²	26 ... 20 AWG
Rated current / Rated cross section		1 A / 2.5 mm²	1 A / 12 AWG
Rated short-time withstand current (1s)			
Short Circuit Current Rating (with specific conditions)			
Rated voltage		630 V	300 V
Impulse withstand voltage			
Protection		IP20	NEMA 1

Mounting instructions

Rail		TH 35-7.5, TH 35-15
Wire stripping length		11 mm 0.433 in
Tool (for flexible conductor without ferrule)		Flat screwdriver Ø 3.5 mm Ø 0.138 in

The connecting capacity data for one Rigid: Solid/Stranded, or one Flexible conductor (when applicable) is a mandatory information required by IEC, UL and CSA standards (Copper conductors). All other data are provided as supplementary information only. For more details, please consult our CB, UL or CSA certificates and technical datasheet available on http://www.TE.com

CE | CB | RoHS | USR CNR | CSA | EAC | BV

Accessories

	Description			Color	Type	Part Number		Pkg qty	Weight (1 pce) g
1	**End stops**	5.2 mm	0.205 in	Dark grey	BAZ1	1SNK900002R0000		50	5.30
2	**End sections**	2 mm	0.158 in	Dark grey	EK2.5-S-4P	1SNK705913R0000		20	2.94
3	**Jumper bars**	2 poles	32 A (IEC)	Orange	JB5-2	1SNK905302R0000		50	1.30
		3 poles	32 A (IEC)		JB5-3	1SNK905303R0000		50	2.00
		4 poles	32 A (IEC)		JB5-4	1SNK905304R0000		50	2.70
		5 poles	32 A (IEC)		JB5-5	1SNK905305R0000		50	3.50
		10 poles	32 A (IEC)		JB5-10	1SNK905310R0000		30	7.10
		50 poles	32 A (IEC)		JB5-50	1SNK905350R0000		10	36.00
4	**Circuit separators**	3 mm	0.118 in	Dark grey	CS-R3	1SNK900107R0000		20	6.40
5	**Test adapters**	For test plugs DIA 2 mm 0.079 in		Dark grey	TP2	1SNK900203R0000		20	1.70
		For test plugs DIA 4 mm 0.157 in			TP4	1SNK900205R0000		20	2.40
6	**Test connectors**	5.2 mm 0.205 in spacing		Dark grey	TC5	1SNK900200R0000		10	5.20
		End module, 5.2 mm 0.205 in			TC5-R1	1SNK900201R0000		10	5.20
7	**Terminal block markers**	Blank marker		White	MG-CPM 13 41790	1SNB041790R0512		1960	0.23
		Blank card			MC512	1SNK140000R0000		22	9.00
					MC512PA	1SNK149999R0000		20	10.00
		Universal wire markers holder		Grey	UMH	1SNK900611R0000		10	0.20

Complete list of accessories is indicated in the terminal block datasheet including end stops.
Some accessories such as jumper bars may modify the terminal block's ratings: Complete information available in the accessories section of the catalog.

1SNK162072S0201

Technical data valid for copper conductors only.

ZK2.5-D-CH-UD PI-Spring terminal blocks
Component holder - 5.2 mm 0.205 in spacing

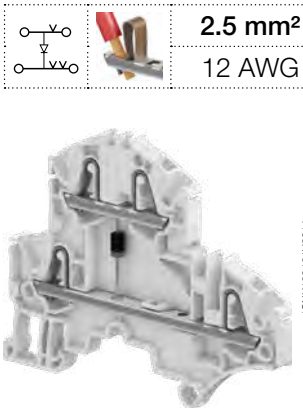

ZK2.5-D-CH

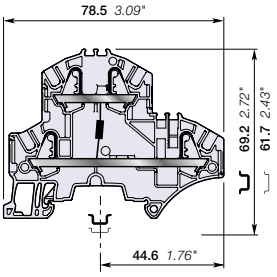

5.2 mm 0.205 in spacing

		2.5 mm²
		12 AWG

Description

Protect your circuit with one 1N4007 diode.

Ordering details

Description	Color	Type	Part Number		Pkg qty	Weight (1 pce) g
Component holder	Grey	ZK2.5-D-CH-UD	1SNK705213R0000		50	11.20

Main technical data

Connecting capacity		IEC	UL - CSA
1 conductor per clamp	Rigid: Solid/Stranded	0.2 ... 4 mm²	26 ... 12 AWG
	Flexible without ferrule	0.22 ... 2.5 mm²	
	Flexible with non insulated ferrule	0.22 ... 2.5 mm²	26 ... 14 AWG
	Flexible with insulated ferrule	0.22 ... 2.5 mm²	26 ... 14 AWG
2 conductors per clamp	Flexible with twin ferrule	0.22 ... 0.5 mm²	26 ... 20 AWG
Rated current / Rated cross section		24 A / 2.5 mm²	20 A / 12 AWG
Rated short-time withstand current (1s)		300 A	
Short Circuit Current Rating (with specific conditions)			
Rated voltage		800 V	600 V
Impulse withstand voltage			
Protection		IP20	NEMA 1

Mounting instructions

Rail		TH 35-7.5, TH 35-15
Wire stripping length		11 mm 0.443 in
Tool (for flexible conductor without ferrule)		Flat screwdriver Ø 3.5 mm Ø 0.138 in

The connecting capacity data for one Rigid: Solid/Stranded, or one Flexible conductor (when applicable) is a mandatory information required by IEC, UL and CSA standards (Copper conductors). All other data are provided as supplementary information only. For more details, please consult our CB, UL or CSA certificates and technical datasheet available on http://www.TE.com

CE | RoHS | USR CNR | CSA | EAC

Accessories

	Description			Color	Type	Part Number		Pkg qty	Weight (1 pce) g
1	End stops	10 mm	0.394 in	Dark grey	BAZH1	1SNK900102R0000		20	24.00
2	End sections	2 mm	0.079 in	Dark grey	EK2.5-D2	1SNK705960R0000		20	3.40
3	Jumper bars	2 poles	32 A (IEC)	Orange	JB5-2	1SNK905302R0000		50	1.30
		3 poles	32 A (IEC)		JB5-3	1SNK905303R0000		50	2.00
		4 poles	32 A (IEC)		JB5-4	1SNK905304R0000		50	2.70
		5 poles	32 A (IEC)		JB5-5	1SNK905305R0000		50	3.50
		10 poles	32 A (IEC)		JB5-10	1SNK905310R0000		30	7.10
		50 poles	32 A (IEC)		JB5-50	1SNK905350R0000		10	36.00
4	Test adapters	For test plugs DIA 2 mm 0.079 in		Dark grey	TP2	1SNK900203R0000		20	1.70
		For test plugs DIA 4 mm 0.157 in			TP4	1SNK900205R0000		20	2.40
5	Test connectors	5.2 mm 0.205 in spacing		Dark grey	TC5	1SNK900200R0000		10	5.20
		End module, 5.2 mm 0.205 in			TC5-R1	1SNK900201R0000		10	5.20
6	Shield connectors				SHB	1SNK900602R0000		20	4.90
7	Label holders			Dark grey	LH-J	1SNK900606R0000		100	0.73
8	Terminal block markers	Blank marker		White	MG-CPM 13 41790	1SNB041790R0512		1960	0.23
		Blank card			MC512	1SNK140000R0000		22	9.00
					MC512PA	1SNK149999R0000		20	10.00
		Universal wire markers holder		Grey	UMH	1SNK900611R0000		10	0.20

Complete list of accessories is indicated in the terminal block datasheet including end stops.
Some accessories such as jumper bars may modify the terminal block's ratings: Complete information available in the accessories section of the catalog.

1SNK162066S0201

Technical data valid for copper conductors only.

ZK2.5-D-CH-DU PI-Spring terminal blocks
Component holder - 5.2 mm 0.205 in spacing

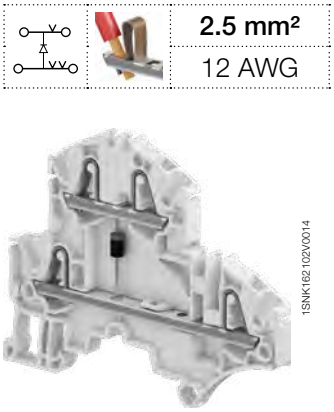

2.5 mm²	
12 AWG	

1SNK162102V0014

ZK2.5-D-CH

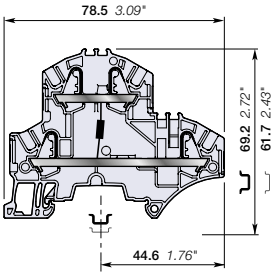

5.2 mm 0.205 in spacing

Description

Protect your circuit with one 1N4007 diode.

Ordering details

Description	Color	Type	Part Number		Pkg qty	Weight (1 pce) g
Component holder	Grey	ZK2.5-D-CH-DU	1SNK705214R0000		50	11.20

Main technical data

Connecting capacity		IEC	UL - CSA
1 conductor per clamp	Rigid: Solid/Stranded	0.2 ... 4 mm²	26 ... 12 AWG
	Flexible without ferrule	0.22 ... 2.5 mm²	
	Flexible with non insulated ferrule	0.22 ... 2.5 mm²	26 ... 14 AWG
	Flexible with insulated ferrule	0.22 ... 2.5 mm²	26 ... 14 AWG
2 conductors per clamp	Flexible with twin ferrule	0.22 ... 0.5 mm²	26 ... 20 AWG
Rated current / Rated cross section		24 A / 2.5 mm²	20 A / 12 AWG
Rated short-time withstand current (1s)		300 A	
Short Circuit Current Rating (with specific conditions)			
Rated voltage		800 V	600 V
Impulse withstand voltage			
Protection		IP20	NEMA 1

The connecting capacity data for one Rigid: Solid/Stranded, or one Flexible conductor (when applicable) is a mandatory information required by IEC, UL and CSA standards (Copper conductors). All other data are provided as supplementary information only. For more details, please consult our CB, UL or CSA certificates and technical datasheet available on http://www.TE.com

CE RoHS USR CNR CSA EAC

Mounting instructions

Rail	TH 35-7.5, TH 35-15
Wire stripping length	11 mm 0.443 in
Tool (for flexible conductor without ferrule)	Flat screwdriver Ø 3.5 mm Ø 0.138 in

Accessories

	Description			Color	Type	Part Number		Pkg qty	Weight (1 pce) g
1	End stops	10 mm	0.394 in	Dark grey	BAZH1	1SNK900102R0000		20	24.00
2	End sections	2 mm	0.079 in	Dark grey	EK2.5-D2	1SNK705960R0000		20	3.40
3	Jumper bars	2 poles	32 A (IEC)	Orange	JB5-2	1SNK905302R0000		50	1.30
		3 poles	32 A (IEC)		JB5-3	1SNK905303R0000		50	2.00
		4 poles	32 A (IEC)		JB5-4	1SNK905304R0000		50	2.70
		5 poles	32 A (IEC)		JB5-5	1SNK905305R0000		50	3.50
		10 poles	32 A (IEC)		JB5-10	1SNK905310R0000		30	7.10
		50 poles	32 A (IEC)		JB5-50	1SNK905350R0000		10	36.00
4	Test adapters	For test plugs DIA 2 mm 0.079 in		Dark grey	TP2	1SNK900203R0000		20	1.70
		For test plugs DIA 4 mm 0.157 in			TP4	1SNK900205R0000		20	2.40
5	Test connectors	5.2 mm 0.205 in spacing		Dark grey	TC5	1SNK900200R0000		10	5.20
		End module, 5.2 mm 0.205 in			TC5-R1	1SNK900201R0000		10	5.20
6	Shield connectors				SHB	1SNK900602R0000		20	4.90
7	Label holders			Dark grey	LH-J	1SNK900606R0000		100	0.73
8	Terminal block markers	Blank marker		White	MG-CPM 13 41790	1SNB041790R0512		1960	0.23
		Blank card			MC512	1SNK140000R0000		22	9.00
					MC512PA	1SNK149999R0000		20	10.00
		Universal wire markers holder		Grey	UMH	1SNK900611R0000		10	0.20

Complete list of accessories is indicated in the terminal block datasheet including end stops.
Some accessories such as jumper bars may modify the terminal block's ratings: Complete information available in the accessories section of the catalog.

1SNK162067S0201

Technical data valid for copper conductors only.

ZK2.5-D-CH2-DU-RL PI-Spring terminal blocks

Component holder - 5.2 mm 0.205 in spacing

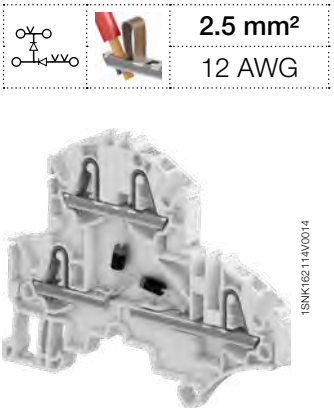

2.5 mm²	
12 AWG	

1SNK162114V0014

ZK2.5-D-CH2

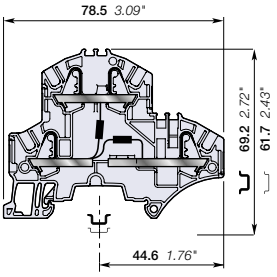

5.2 mm 0.205 in spacing

Description

- Protect your circuit with 1N4007 diodes;
- Convenient identification of the diodes orientation on the terminal block front side.

Ordering details

Description	Color	Type	Part Number		Pkg qty	Weight (1 pce) g
Component holder	Grey	ZK2.5-D-CH2-DU-RL	1SNK705219R0000		50	11.20

Main technical data

Connecting capacity		IEC	UL - CSA
1 conductor per clamp	Rigid: Solid/Stranded	0.2 ... 4 mm²	26 ... 12 AWG
	Flexible without ferrule	0.22 ... 2.5 mm²	
	Flexible with non insulated ferrule	0.22 ... 2.5 mm²	26 ... 14 AWG
	Flexible with insulated ferrule	0.22 ... 2.5 mm²	26 ... 14 AWG
2 conductors per clamp	Flexible with twin ferrule	0.22 ... 0.5 mm²	26 ... 20 AWG
Rated current / Rated cross section		1 A / 2.5 mm²	/ 12 AWG
Rated short-time withstand current (1s)			
Short Circuit Current Rating (with specific conditions)			
Rated voltage		800 V	600 V
Impulse withstand voltage			
Protection		IP20	NEMA 1

Mounting instructions

Rail		TH 35-7.5, TH 35-15
Wire stripping length		11 mm 0.443 in
Tool (for flexible conductor without ferrule)		Flat screwdriver Ø 3.5 mm Ø 0.138 in

The connecting capacity data for one Rigid: Solid/Stranded, or one Flexible conductor (when applicable) is a mandatory information required by IEC, UL and CSA standards (Copper conductors). All other data are provided as supplementary information only. For more details, please consult our CB, UL or CSA certificates and technical datasheet available on http://www.TE.com

CE RoHS EAC

Accessories

	Description			Color	Type	Part Number		Pkg qty	Weight (1 pce) g
1	End stops	10 mm	0.394 in	Dark grey	BAZH1	1SNK900102R0000		20	24.00
2	End sections	2 mm	0.079 in	Dark grey	EK2.5-D2	1SNK705960R0000		20	3.40
3	Jumper bars	2 poles	32 A (IEC)	Orange	JB5-2	1SNK905302R0000		50	1.30
		3 poles	32 A (IEC)		JB5-3	1SNK905303R0000		50	2.00
		4 poles	32 A (IEC)		JB5-4	1SNK905304R0000		50	2.70
		5 poles	32 A (IEC)		JB5-5	1SNK905305R0000		50	3.50
		10 poles	32 A (IEC)		JB5-10	1SNK905310R0000		30	7.10
		50 poles	32 A (IEC)		JB5-50	1SNK905350R0000		10	36.00
4	Test adapters	For test plugs DIA 2 mm 0.079 in		Dark grey	TP2	1SNK900203R0000		20	1.70
		For test plugs DIA 4 mm 0.157 in			TP4	1SNK900205R0000		20	2.40
5	Test connectors	5.2 mm 0.205 in spacing		Dark grey	TC5	1SNK900200R0000		10	5.20
		End module, 5.2 mm 0.205 in			TC5-R1	1SNK900201R0000		10	5.20
6	Shield connectors				SHB	1SNK900602R0000		20	4.90
7	Terminal block markers	Blank marker		White	MG-CPM 13 41790	1SNB041790R0512		1960	0.23
		Blank card			MC512	1SNK140000R0000		22	9.00
					MC512PA	1SNK149999R0000		20	10.00
		Universal wire markers holder		Grey	UMH	1SNK900611R0000		10	0.20

Complete list of accessories is indicated in the terminal block datasheet including end stops.
Some accessories such as jumper bars may modify the terminal block's ratings: Complete information available in the accessories section of the catalog.

1SNK162073S0201

Technical data valid for copper conductors only.

SNK series, terminal blocks
Screw clamp technology

Technologies presentation			72
Overview			76

Feed-through

4 mm² / 12 AWG	**ZS4**		80
6 mm² / 10 AWG	**ZS6**		81
	ZS6-3S and **ZS6-4S**	with 3 and 4 connections	82-83
10 mm² / 6 AWG	**ZS10**		84
16 mm² / 4 AWG	**ZS16**		85
25 mm² / 3 AWG	**ZS25**		86
35 mm² / 0 AWG	**ZS35**		87
50 mm² / 0 AWG	**ZS50**		88
70 mm² / 00 AWG	**ZS70**		89
95 mm² / 0000 AWG	**ZS95**		90
150 mm² / 350 Kcmil	**ZS150**		91
240 mm² / 240 Kcmil	**ZS240**		92

Ground

4 mm² / 12 AWG	**ZS4-PE**		93
6 mm² / 10 AWG	**ZS6-PE**		94
	ZS6-3S-PE and **ZS6-4S-PE**	with 3 and 4 connections	95-96
10 mm² / 6 AWG	**ZS10-PE**		97
16 mm² / 4 AWG	**ZS16-PE**		98
25 mm² / 3 AWG	**ZS25-PE**		99
35 mm² / 2 AWG	**ZS35-PE**		100
35 mm²	**ZS35-PEN**	+ neutral	101
50 mm² / 0 AWG	**ZS50-PE**		102
70 mm² / 00 AWG	**ZS70-PE**		103
95 mm² / 0000 AWG	**ZS95-PE**		104

Disconnect with blade

4 mm² / 10 AWG	**ZS4-S**, **ZS4-S-T**, **ZS4-S-R1** and **ZS4-S-T-R1**	with test	105-108
6 mm² / 10 AWG	**ZS6-S** and **ZS6-S-4S-T**	with test	109-110
10 mm² / 6 AWG	**ZS10-S**		111

Disconnect with plug

4 mm² / 10 AWG	**ZS4-SP**, **ZS4-SP-T2**, **ZS4-SP-R1** and **ZS4-SP-T2-R1**	with test	112-115
10 mm² / 6 AWG	**ZS10-SP**		116

Fuse and marshalling cabinets application overview			118

For 5x20 and 5x25 mm fuses

4 mm² / 10 AWG	**ZS4-SF1** and **ZS4-SF1-T**	with test	120-121
	ZS4-SF1-R	with fuse indicator and test	122-123
	ZS4-R1	feed-through	124
	ZS4-S-R3	disconnect with lever	125

For 5x20 mm fuses and marshalling cabinets application

4 mm² / 10 AWG	**ZS4-SF**		126
	ZS4-SF-T	with test	127
	ZS4-SF-R	with fuse indicator and test	128-129
	ZS4-R2	feed-through	130
	ZS4-PE-R2	ground	131
	ZS4-S-R2	disconnect with lever	132

For 6.3x32 mm fuses (¼ x 1¼ in)

10 mm² / 6 AWG	**ZS10-SF**		133
	ZS10-SF-R	with fuse indicator	134
	ZS10-S-R2	disconnect with lever	135

Double deck

4 mm² / 12 AWG	**ZS4-D2** and **ZS4-D1**	2 and 1 feed-through circuits	136-137
6 mm² / 10 AWG	**ZS6-D2** and **ZS6-D1**	2 and 1 feed-through circuits	138-139
	ZS6-D2-PE	1 feed-through circuit and 1 ground circuit	140
	ZS6-D1-PE	1 ground circuit	141
4 mm² / 10 AWG	**ZS4-D2-S**	1 disconnect circuit and 1 feed-through circuit	142
	ZS4-D2-S-T	1 disconnect circuit + test and 1 feed-through circuit	143
	ZS4-D2-SF1	1 fuse circuit and 1 feed-through circuit	144
	ZS4-D2-SF1-R	1 fuse circuit + fuse indicator and 1 feed-through circuit	145

Triple deck

4 mm² / 12 AWG	**ZS4-T3**	3 feed-through circuits	146
4 mm² / 10 AWG	**ZS4-T3-R1**	3 feed-through circuits	147

Component holder

4 mm² / 12 AWG	**ZS4-D-CH-UD** and **ZS4-D-CH-DU**		148-149

Test and measurement

Overview			150
10 mm² / 6 AWG	**ZS10-ST**		154
	ZS10-ST-1	for Potential Transformer circuits	155
	ZS10-ST-T4	for Current Transformer circuits	156
	ZS10-R1	feed-through	157
	ZS10-PE-R1	ground	158

TE Connectivity screw clamp technology benefits from 60 years of experience.

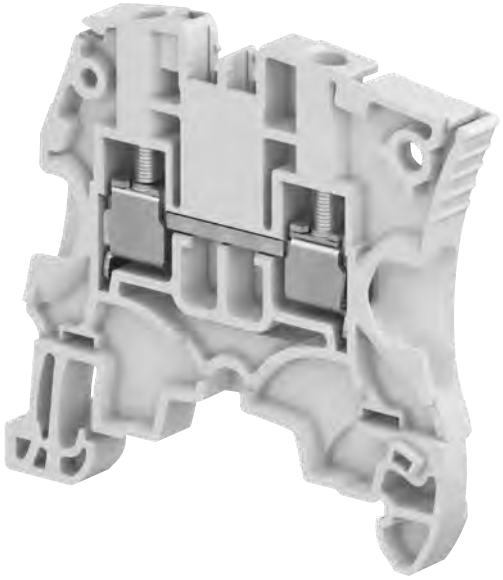

Speed up your projects

An optimized conductor guiding

Smooth connection process up to 2 conductors with or without ferrules thanks to funnel entry shape.
Also perfectly adapted to double ferrule shape 1
Security: flap avoiding the insertion of cable underneath the clamp 2.

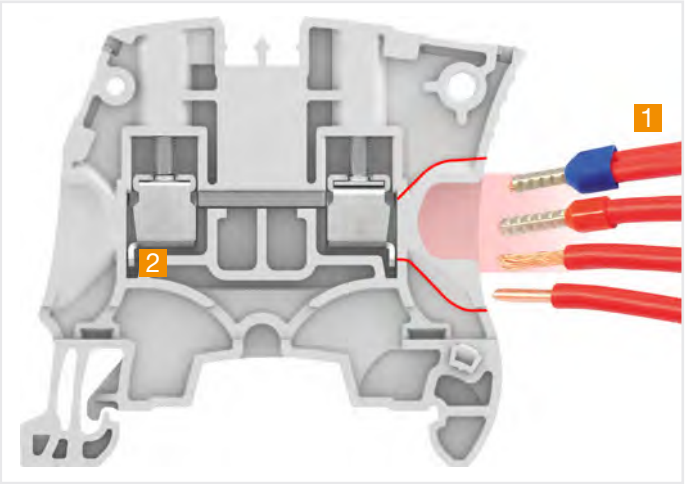

Engineered conductor entry

Better project identification

- Circuit identification is improved thanks to the 20% larger marking area
- Pre-mark by hand or with label on our flat marking surface and start immediately the wiring, before the final markers mounting
- Spare markers re-printing in case of modifications.

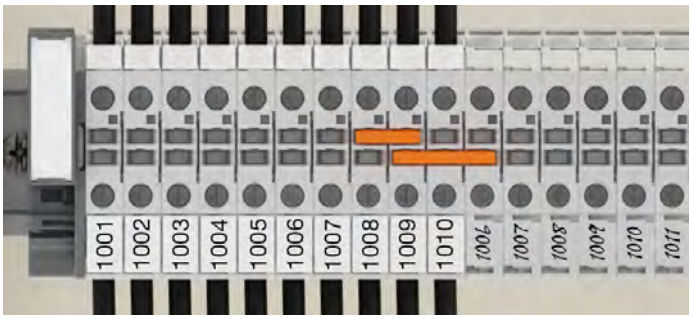

Clear circuit identification

1SNK161092S0201

Easy to install

Smart design facilitating assembly process.
Mounting, wiring, testing… made easy.

Avoid mounting and wiring errors: asymmetrical design allows immediate visual check in case of reversed terminal blocks.

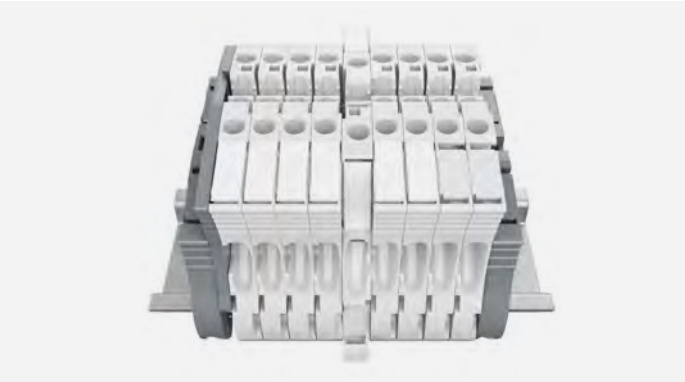

Asymmetrical design avoids mounting error

Minimize retightening campaigns
High torque resistance : the clamp is punched to increase the number of threads in contact by 30 % 1.
The TE Connectivity exclusive anti-release system creates a controlled locking-screw effect reinforced by the 2 overlapping tabs that maintain the clamp parts 2.

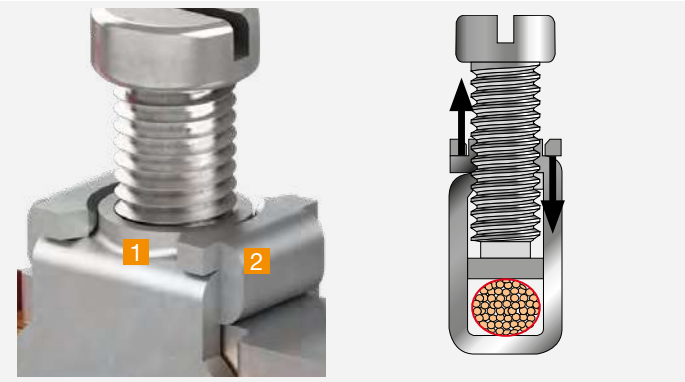

High torque resistance

Anti-release system

Faster accessories mounting
Save up to 70% mounting time thanks to screwless accessories: jumpers, component plugs, test devices, end stops and snap-in ground terminal blocks.

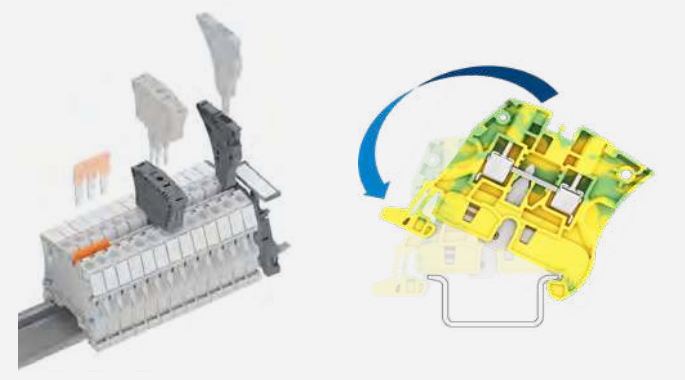

Screwless accessories

Snap-in ground terminal block for rapid installation

1SNK161092S0201

Easy to install

Smart design facilitating assembly process.
Mounting, wiring, testing… made easy.

Locking pin 1 allows quick and easy lock up to ten blocks in position at a time.

Closed jumper location allows great stiffness of the terminal block, optimal jumper guiding and avoids deflections while tightening.

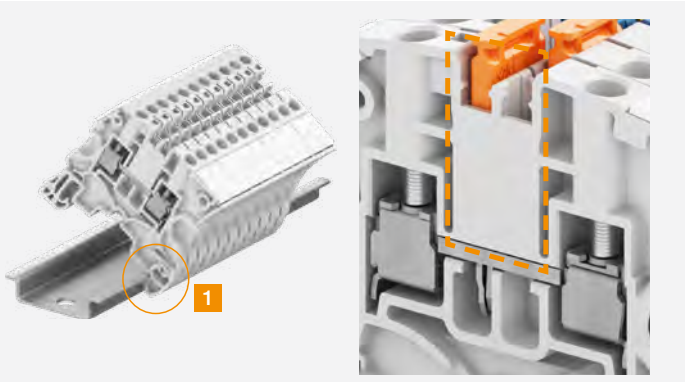

Lock up to ten blocks in position at a time

Closed jumper location for stiffness

Smart accessories
Flexible test solutions from individual insulated test adapter to test connectors for complete assemblies testing.
- Direct plug-in into jumpers channels
- 5, 6, 8 mm spacing, mixing various spacing is possible
- 1000 V rating.

Component holder plugs for series or parallel component mounting (resistors, filters, diodes..).
Can be installed after wiring.
Series plug offers screwless component connection (no soldering).

Plug-in individual test adapter

Plug-in test connector

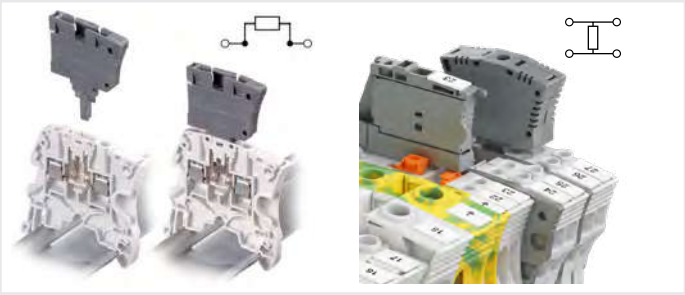

Series plug associated with disconnect blocks

Parallel plug to be installed between 2 blocks

Smart plug-in jumpers:
Pre-cut poles removable by hand: clean cut.
Insulated up to 1000 V (avoid use of separators).
Predefined shapes in molding to easily identify connected poles with a pen.

Pre-cut poles easy removable by hand

Predefined shape to identify connected poles

1SNK161092S0201

Optimized logistics

Reduce your accessories inventory by up to 50%

SNK PI-Spring, screw and pluggable ranges share the same accessories.
Reduced packaging adapted to the usage
(20 items packaging for some references).

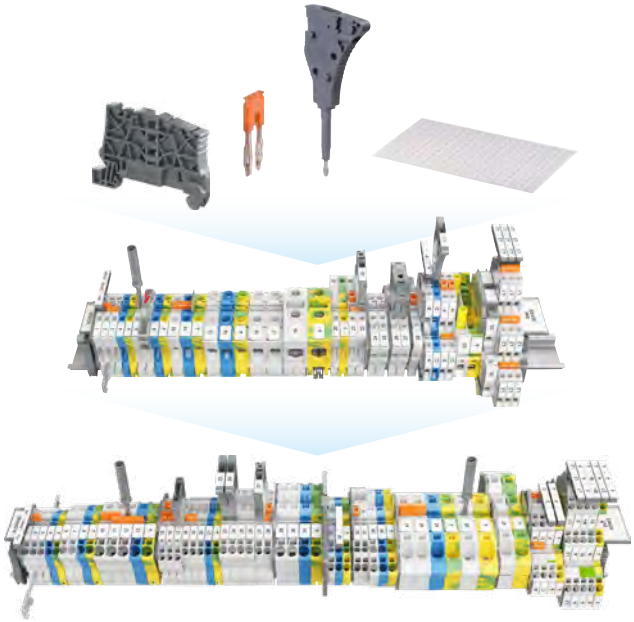

Shared accessories for SNK PI-Spring, screw and pluggable ranges

All end sections and circuit separators fit several types and sizes of blocks.

Stock only one end section for managing your assembly up to 240 mm²

Facilitate maintenance operations

Terminals can be individually removed from a terminal assembly equipped with markers:
TE Connectivity markers become independent after strip mounting, TE Connectivity markers remain on terminal in any situation.

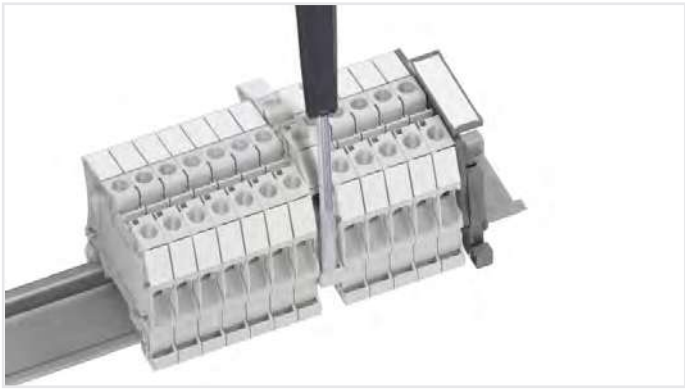

Maintenance operations facilitated

Reliable in harsh conditions

Qualified for worldwide markets, applications and for severe environments: vibration, shock, corrosion…

1SNK161092S0201

2 Connections

Single deck
Feed-through
Ground
Disconnect
Fuse

3 Connections

Single deck
Feed-through
Ground

4 Connections

Single deck
Feed-through
Ground
Disconnect

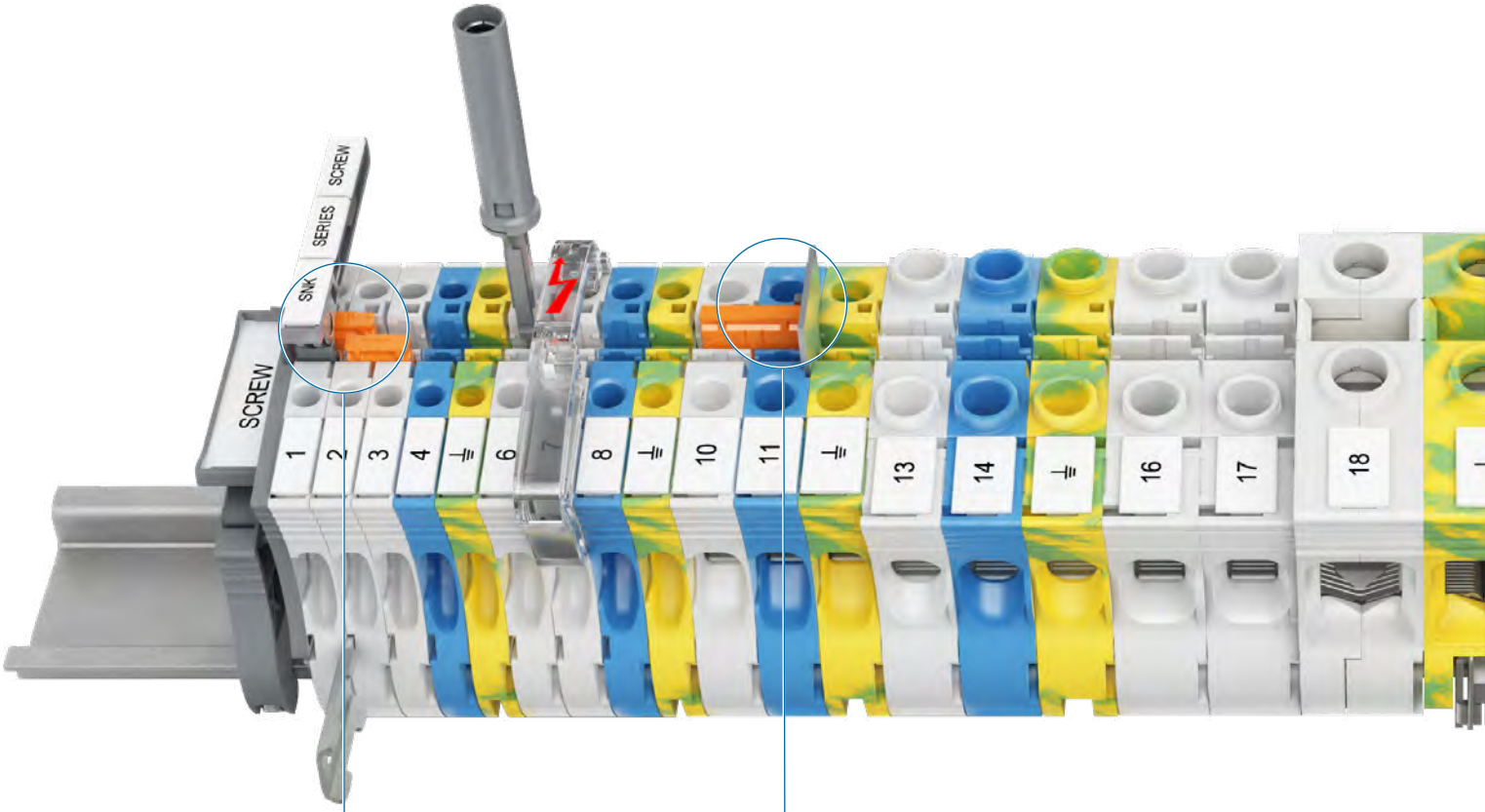

Double central channels
allows multiconfigurations (jumpering, testing and measuring)

Circuit separator
without spacing loss

2x2 Connections

Double deck
Feed-through
Ground
Disconnect
Fuse
Component holder

2 Connections

Test and measurement
Feed-through
Ground
Disconnect

3x2 Connections

Triple deck
Feed-through

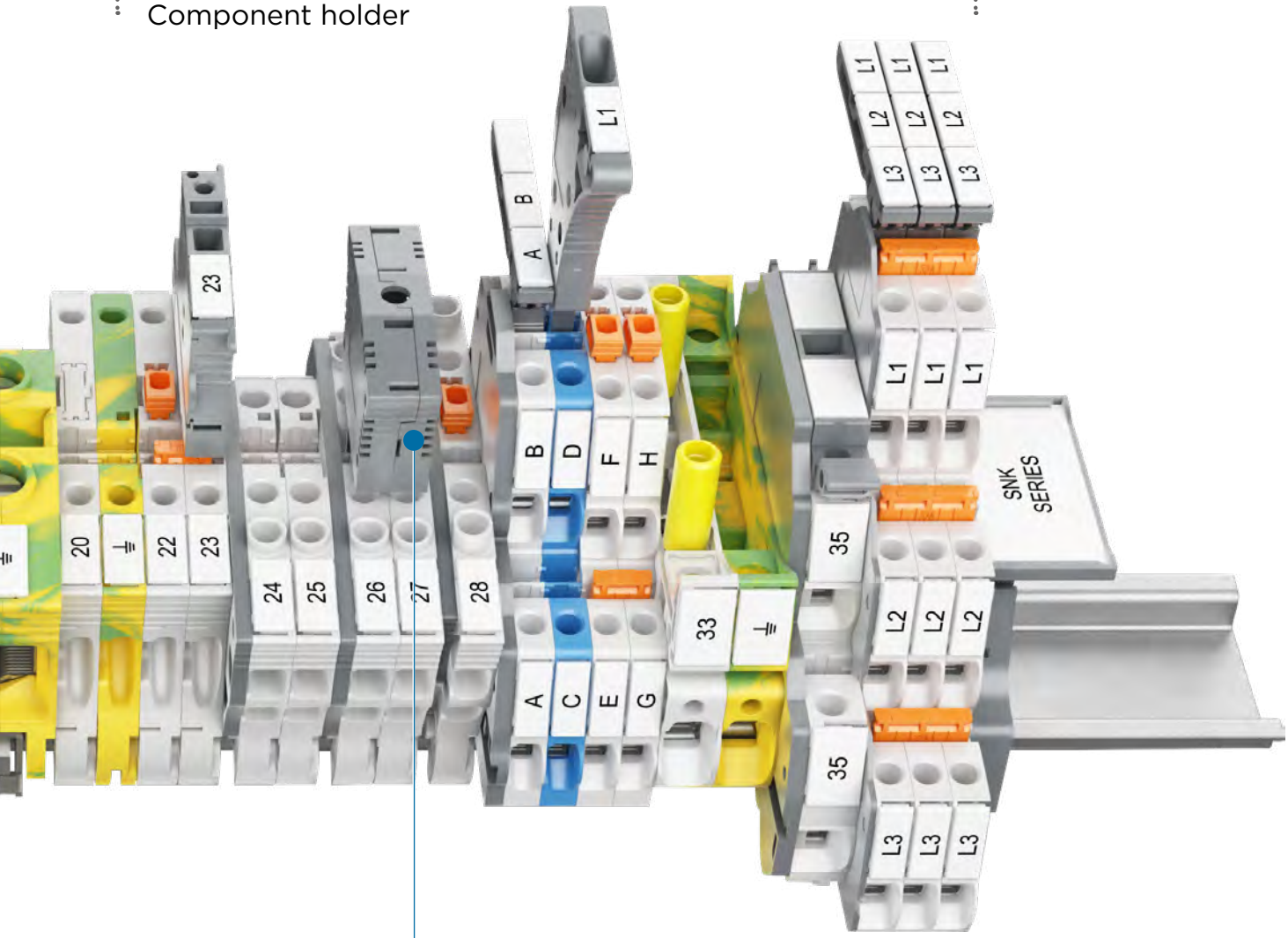

Plug
component holder

1SNK161089S0201

SNK series, terminal blocks
Screw clamp technology

Section		Feed-through					Ground			
4 mm²	12 AWG	ZS4					ZS4-PE			
	10 AWG									
6 mm²	10 AWG	ZS6	ZS6-3S	ZS6-4S			ZS6-PE	ZS6-3S-PE	ZS6-4S-PE	
10 mm²	6 AWG	ZS10					ZS10-PE			
16 mm²	4 AWG	ZS16					ZS16-PE			
25 mm²	3 AWG	ZS25					ZS25-PE			
35 mm²	0 AWG				ZS35					
	2 AWG									ZS35-PE
50 mm²	0 AWG				ZS50					ZS50-PE
70 mm²	00 AWG				ZS70					ZS70-PE
95 mm²	0000 AWG				ZS95					ZS95-PE
150 mm²	350 Kcmil					ZS150				
240 mm²	500 Kcmil					ZS240				

Section		Disconnect with blade					Disconnect with plug			
4 mm²	10 AWG	ZS4-S	ZS4-S-T2		ZS4-S-R1	ZS4-S-T2-R1	ZS4-SP	ZS4-SP-T2	ZS4-SP-R1	ZS4-SP-T2-R1
						ZS4-S-T2.3-R1				
6 mm²	10 AWG	ZS6-S		ZS6-S-4S-T2						
10 mm²	6 AWG	ZS10-S					ZS10-SP			

Section		For 5 x 20 mm fuses				Aligned for marshalling cabinets application			For 6.3 x 32 mm fuses (¼ x 1¼ in)		Aligned
4 mm²	10 AWG	ZS4-SF	ZS4-SF-T2	ZS4-SF-R1	ZS4-SF-R2	ZS4-R2	ZS4-PE-R2	ZS4-S-R2			
				ZS4-SF-R3	ZS4-SF-R4						
10 mm²	6 AWG								ZS10-SF	ZS10-SF-R1	ZS10-S-R2
										ZS10-SF-R3	

Clamp - Channels for jumpering or testing - Test socket - Blown-fuse indicator

1SNK161066S0201

Double deck										Triple deck
Feed-through		Ground		Disconnect with blade		For 5 x 20 mm and 5 x 25 mm fuses		Component holder		Feed-through
ZS4-D2	ZS4-D1							ZS4-D-CH-UD	ZS4-D-CH-DU	ZS4-T3
				ZS4-D2-S	ZS4-D2-S-T2	ZS4-D2-SF1	ZS4-D2-SF1-R1			ZS4-T3-R1
							ZS4-D2-SF-R3			
ZS6-D2	ZS6-D1	ZS6-D2-PE	ZS6-D1-PE							

Test & measurement			
Test disconnect with sliding link		Aligned with ZS10-ST	
ZS10-ST	ZS10-ST-T4	ZS10-R1	ZS10-PE-R1
	ZS10-ST-1		

For 5 x 20 mm and 5 x 25 mm fuses				Feed-through aligned with ZS4-SF1	
ZS4-SF1	ZS4-SF1-T2	ZS4-SF1-R1	ZS4-SF1-R2	ZS4-R1	ZS4-S-R3
		ZS4-SF1-R3	ZS4-SF1-R4		

1SNK161066S0201

ZS4 screw clamp terminal blocks

Feed-through - 5.2 mm 0.205 in spacing

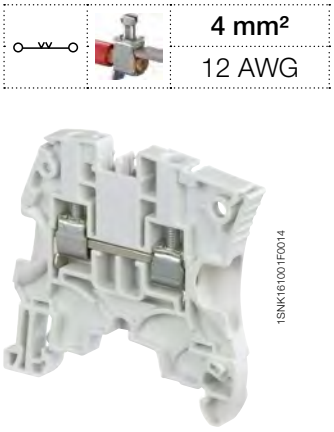

4 mm²
12 AWG

1SNK161001F0014

ZS4

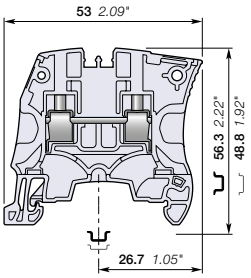

5.2 mm 0.205 in spacing

Description

- Save space by connecting conductors up to 4 mm² (without insulated ferrule, CB certified) 12 AWG in just 5.2 mm 0.205 in spacing,
- Perfectly adapted to solar applications: voltage is rated 1000 V AC / DC IEC.

Ordering details

Description	Color	Type	Part Number		Pkg qty	Weight (1 pce) g
Feed-through	Grey	ZS4	1SNK505010R0000		50	8.80
	Blue	ZS4-BL	1SNK505020R0000		50	8.80
	Orange	ZS4-OR	1SNK505030R0000		50	8.80
	Yellow	ZS4-YL	1SNK505060R0000		50	8.80
	Green	ZS4-GN	1SNK505061R0000		50	8.80
	Red	ZS4-RD	1SNK505062R0000		50	8.80
	Purple	ZS4-PR	1SNK505063R0000		50	8.80
	Brown	ZS4-BR	1SNK505064R0000		50	8.80
	White	ZS4-WH	1SNK505065R0000		50	8.80
	Black	ZS4-BK	1SNK505066R0000		50	8.80

Main technical data

Connecting capacity		IEC	UL - CSA
1 conductor per clamp	Rigid: Solid/Stranded	0.2 ... 4 mm²	24 ... 12 AWG
	Flexible without ferrule	0.22 ... 4 mm²	
	Flexible with non insulated ferrule	0.22 ... 4 mm²	24 ... 12 AWG
	Flexible with insulated ferrule	0.22 ... 2.5 mm²	24 ... 14 AWG
	Gauge	A3-B3	
2 conductors per clamp	Rigid: Solid/Stranded	0.2 ... 1.5 mm²	24 ... 16 AWG
	Flexible without ferrule	0.2 ... 1.5 mm²	
	Flexible with twin ferrule	0.22 ... 1.5 mm²	24 ... 16 AWG
Rated current / Rated cross section		32 A / 4 mm²	20 A / 12 AWG
Rated short-time withstand current (1s)		480 A	
Short Circuit Current Rating (with specific conditions)			100 kA
Rated voltage		1000 V	600 V
Impulse withstand voltage		8000 V	
Protection		IP20	NEMA 1
Increased safety Ex e		693 V 32 A IEC/EN 60079-7 - IM2 II 2 GD Ex eb I/II/IIIC – 600 V 20 A UL 60079-7 - Class I, Zone 1, AEx e II, Ex e II U	

Mounting instructions

Rail	TH 35-7.5, TH 35-15
Wire stripping length	10.5 mm 0.412 in
Tool	Flat screwdriver Ø 3.5 mm Ø 0.138 in
Torque	0.6 Nm ± 0.1 5.31 lb.in ± 0.885

The connecting capacity data for one Rigid: Solid/Stranded, or one Flexible conductor (when applicable) is a mandatory information required by IEC, UL and CSA standards (Copper conductors). All other data are provided as supplementary information only. For more details, please consult our CB, UL or CSA certificates and technical datasheet available on http://www.TE.com

CE, CB, RoHS, USR CNR, CSA, EAC Ex, ATEX, IECEx, BR-Ex e II, Haz Loc, BV, DNV, Rina

Accessories

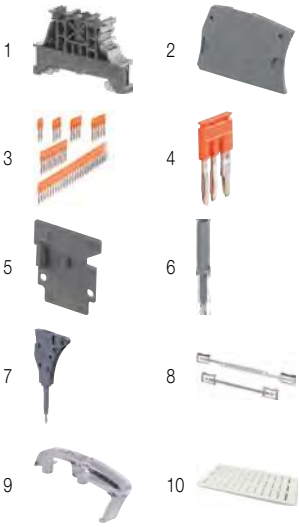

	Description			Color	Type	Part Number		Pkg qty	Weight (1 pce) g
1	End stops	10 mm	0.394 in	Dark grey	BAM4	1SNK900001R0000		50	14.00
2	End sections	2.2 mm	0.087 in	Dark grey	ES4	1SNK505910R0000		20	2.20
3	Jumper bars	2 poles	32 A (IEC)	Orange	JB5-2	1SNK905302R0000		50	1.30
		3 poles	32 A (IEC)		JB5-3	1SNK905303R0000		50	2.00
		4 poles	32 A (IEC)		JB5-4	1SNK905304R0000		50	2.70
		5 poles	32 A (IEC)		JB5-5	1SNK905305R0000		50	3.50
		10 poles	32 A (IEC)		JB5-10	1SNK905310R0000		30	7.10
		50 poles	32 A (IEC)		JB5-50	1SNK905350R0000		10	36.00
4	Cross spacing jumpers	3 poles	32 A (IEC)	Orange	JB85-3	1SNK900603R0000		10	2.80
5	Circuit separators	0 mm	0 in	Dark grey	CS	1SNK900101R0000		20	0.20
		3 mm	0.118 in		CS-R1	1SNK900103R0000		20	5.20
6	Test adapters	For test plugs DIA 2 mm 0.079 in		Dark grey	TP2	1SNK900203R0000		20	1.70
		For test plugs DIA 4 mm 0.157 in			TP4	1SNK900205R0000		20	2.40
7	Test connectors	5.2 mm 0.205 in spacing		Dark grey	TC5	1SNK900200R0000		10	5.20
		End module, 5.2 mm 0.205 in			TC5-R1	1SNK900201R0000		10	5.20
8	Shield connectors				SHBS	1SNK900600R0000		20	3.50
9	Protecting covers	5.2 mm 0.205 in spacing		Transparent	PL5	1SNK900618R0000		10	1.50
10	Terminal block markers	Blank marker		White	MG-CPM 13 41790	1SNB041790R0512		1960	0.23
		Blank card			MC512	1SNK140000R0000		22	9.00
					MC512PA	1SNK149999R0000		20	10.00
		Universal wire markers holder		Grey	UMH	1SNK900611R0000		10	0.20

Complete list of accessories is indicated in the terminal block datasheet including end stops.
Some accessories such as jumper bars may modify the terminal block's ratings: Complete information available in the accessories section of the catalog.

Ground screw clamp terminal blocks

Description		Color	Type	Part Number		Pkg qty	Weight (1 pce) g
Ground	Profile aligned with ZS4	Green-yellow	ZS4-PE	1SNK505150R0000		20	12.10

1SNK161001S0201

Technical data valid for copper conductors only.

ZS6 screw clamp terminal blocks
Feed-through - 6 mm 0.236 in spacing

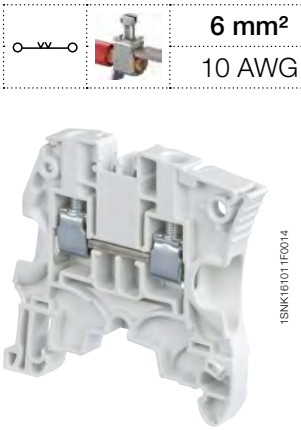

ZS6

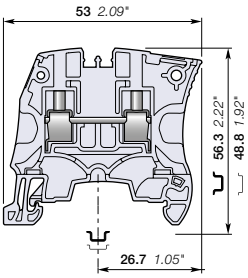

6 mm 0.236 in spacing

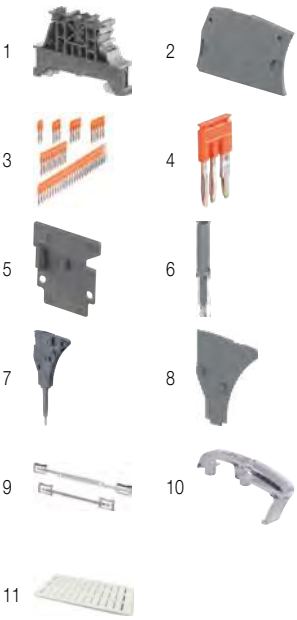

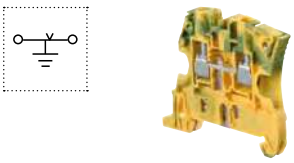

6 mm²
10 AWG

Description

Save space by connecting conductors up to 6 mm² (without insulated ferrule, CB certified) 10 AWG in just 6 mm 0.236 in spacing,

– Perfectly adapted to solar applications: voltage is rated 1000 V AC / DC IEC.

Ordering details

Description	Color	Type	Part Number		Pkg qty	Weight (1 pce) g
Feed-through	Grey	ZS6	1SNK506010R0000		50	10.60
	Blue	ZS6-BL	1SNK506020R0000		50	10.60
	Orange	ZS6-OR	1SNK506030R0000		50	10.60
	Yellow	ZS6-YL	1SNK506060R0000		50	10.60
	Green	ZS6-GN	1SNK506061R0000		50	10.60
	Red	ZS6-RD	1SNK506062R0000		50	10.60
	Purple	ZS6-PR	1SNK506063R0000		50	10.60
	Brown	ZS6-BR	1SNK506064R0000		50	10.60
	White	ZS6-WH	1SNK506065R0000		50	10.60
	Black	ZS6-BK	1SNK506066R0000		50	10.60

Main technical data

Connecting capacity		IEC	UL - CSA
1 conductor per clamp	Rigid: Solid/Stranded	0.2 ... 6 mm²	24 ... 10 AWG
	Flexible without ferrule	0.2 ... 6 mm²	
	Flexible with non insulated ferrule	0.22 ... 4 mm²	24 ... 12 AWG
	Flexible with insulated ferrule	0.22 ... 4 mm²	24 ... 12 AWG
	Gauge	A4-B3	
2 conductors per clamp	Rigid: Solid/Stranded	0.2 ... 2.5 mm²	24 ... 14 AWG
	Flexible without ferrule	0.2 ... 2.5 mm²	
	Flexible with twin ferrule	0.22 ... 2.5 mm²	24 ... 14 AWG
Rated current / Rated cross section		41 A / 6 mm²	30 A / 10 AWG
Rated short-time withstand current (1s)		720 A	
Short Circuit Current Rating (with specific conditions)			100 kA
Rated voltage		1000 V	600 V
Impulse withstand voltage		8000 V	
Protection		IP20	NEMA 1
Increased safety Ex e		693 V 41 A IEC/EN 60079-7 - IM2 II 2 GD Ex eb I/II/IIIC – 600 V 30 A UL 60079-7 - Class I, Zone 1, AEx e II, Ex e II U	

The connecting capacity data for one Rigid: Solid/Stranded, or one Flexible conductor (when applicable) is a mandatory information required by IEC, UL and CSA standards (Copper conductors). All other data are provided as supplementary information only. For more details, please consult our CB, UL or CSA certificates and technical datasheet available on http://www.TE.com

CE, CB, RoHS, USR CNR, CSA, EAC Ex, ATEX, IECEx, BR-Ex e II, Haz Loc, BV, DNV, Rina

Mounting instructions

Rail	TH 35-7.5, TH 35-15
Wire stripping length	10.5 mm 0.412 in
Tool	Flat screwdriver Ø 4 mm Ø 0.157 in
Torque	0.85 Nm ± 0.15 7.52 lb.in ± 1.33

Accessories

	Description			Color	Type	Part Number		Pkg qty	Weight (1 pce) g
1	**End stops**	10 mm	0.394 in	Dark grey	BAM4	1SNK900001R0000		50	14.00
2	**End sections**	2.2 mm	0.087 in	Dark grey	ES4	1SNK505910R0000		20	2.20
3	**Jumper bars**	2 poles	41 A (IEC)	Orange	JB6-2	1SNK906302R0000		50	1.30
		3 poles	41 A (IEC)		JB6-3	1SNK906303R0000		50	2.10
		4 poles	41 A (IEC)		JB6-4	1SNK906304R0000		50	2.90
		5 poles	41 A (IEC)		JB6-5	1SNK906305R0000		50	3.60
		10 poles	41 A (IEC)		JB6-10	1SNK906310R0000		20	7.40
		50 poles	41 A (IEC)		JB6-50	1SNK906350R0000		10	38.10
4	**Cross spacing jumpers**	3 poles	32 A (IEC)	Orange	JB85-3	1SNK900603R0000		10	2.80
5	**Circuit separators**	0 mm	0 in	Dark grey	CS	1SNK900101R0000		20	0.20
		3 mm	0.118 in		CS-R1	1SNK900103R0000		20	5.20
6	**Test adapters**	For test plugs DIA 2 mm 0.079 in		Dark grey	TP2	1SNK900203R0000		20	1.70
		For test plugs DIA 4 mm 0.157 in			TP4	1SNK900205R0000		20	2.40
7	**Test connectors**	End module, 5.2 mm 0.205 in		Dark grey	TC5-R1	1SNK900201R0000		10	5.20
8	**Spacers**	0.8 mm	0.031 in	Dark grey	ES-TC6	1SNK900105R0000		10	0.80
9	**Shield connectors**				SHBS	1SNK900600R0000		20	3.50
10	**Protecting covers**	6 mm 0.236 in spacing		Transparent	PL6	1SNK900619R0000		10	1.80
11	**Terminal block markers**	Blank marker		White	MG-CPM 13 41791	1SNB041791R0612		1680	0.27
		Blank card			MC612	1SNK150000R0000		22	10.00
					MC612PA	1SNK159999R0000		20	11.00
		Universal wire markers holder		Grey	UMH	1SNK900611R0000		10	0.20

Complete list of accessories is indicated in the terminal block datasheet including end stops.
Some accessories such as jumper bars may modify the terminal block's ratings: Complete information available in the accessories section of the catalog.

Ground screw clamp terminal blocks

Description		Color	Type	Part Number		Pkg qty	Weight (1 pce) g
Ground	Profile aligned with ZS6	Green-yellow	ZS6-PE	1SNK506150R0000		20	13.70

Technical data valid for copper conductors only.

1SNK161008S0201

3

ZS6-3S screw clamp terminal blocks

Feed-through with 3 connections - 6 mm 0.236 in spacing

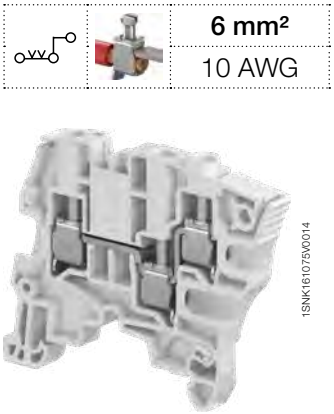

6 mm²
10 AWG

1SNK161075V0014

ZS6-3S

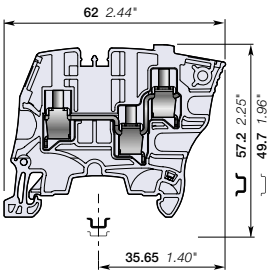

6 mm 0.236 in spacing

Description

- Recommended for energy markets and highly demanding applications requiring that only one conductor be connected per clamp,
- These blocks offer a high density connecting capacity (up to 3 connections) in a low profile and just 6 mm 0.236 in spacing.

Ordering details

Description	Color	Type	Part Number		Pkg qty	Weight (1 pce) g
Feed-through	Grey	ZS6-3S	1SNK506011R0000		50	11.80
	Blue	ZS6-3S-BL	1SNK506021R0000		50	11.80
	Yellow	ZS6-3S-YL	1SNK506067R0000		50	11.80

Main technical data

Connecting capacity		IEC	UL - CSA
1 conductor per clamp	Rigid: Solid/Stranded	0.2 ... 6 mm²	24 ... 10 AWG
	Flexible without ferrule	0.22... 6 mm²	
	Flexible with non insulated ferrule	0.22 ... 4 mm²	24 ... 12 AWG
	Flexible with insulated ferrule	0.22 ... 4 mm²	24 ... 12 AWG
	Gauge	A4-B3	
2 conductors per clamp	Rigid: Solid/Stranded	0.2 ... 2.5 mm²	24 ... 14 AWG
	Flexible without ferrule	0.2 ... 2.5 mm²	
	Flexible with twin ferrule	0.22 ... 2.5 mm²	24 ... 14 AWG
Rated current / Rated cross section		32 A / 4 mm²	30 A / 10 AWG
Maximum current / Maximum cross section		39 A / 6 mm²	
Rated short-time withstand current (1s)		480 A	
Short Circuit Current Rating (with specific conditions)			100 kA
Rated voltage		800 V	600 V
Impulse withstand voltage		8000 V	
Protection		IP20	NEMA 1
Increased safety Ex e		550 V 29 A IEC/EN 60079-7 - IM2 II 2 GD Ex eb I/II/IIIC – 600 V 30 A	

Mounting instructions

Rail	TH 35-7.5, TH 35-15
Wire stripping length	10.5 mm 0.413 in
Tool	Flat screwdriver Ø 4 mm Ø 0.157 in
Torque	0.75 Nm ± 0.05 6.64 lb.in ± 0.443

The connecting capacity data for one Rigid: Solid/Stranded, or one Flexible conductor (when applicable) is a mandatory information required by IEC, UL and CSA standards (Copper conductors). All other data are provided as supplementary information only. For more details, please consult our CB, UL or CSA certificates and technical datasheet available on http://www.TE.com

CE, CB, RoHS, USR, CSA, EAC Ex, ATEX, IECEx, BR-Ex e II, Haz Loc, BV, DNV

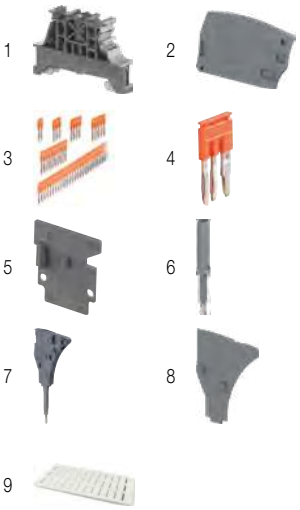

Accessories

	Description			Color	Type	Part Number		Pkg qty	Weight (1 pce) g
1	End stops	10 mm	0.394 in	Dark grey	BAM4	1SNK900001R0000		50	14.00
2	End sections	2.2 mm	0.087 in	Dark grey	ES6-3S	1SNK505912R0000		20	2.50
3	Jumper bars	2 poles	41 A (IEC)	Orange	JB6-2	1SNK906302R0000		50	1.30
		3 poles	41 A (IEC)		JB6-3	1SNK906303R0000		50	2.10
		4 poles	41 A (IEC)		JB6-4	1SNK906304R0000		50	2.90
		5 poles	41 A (IEC)		JB6-5	1SNK906305R0000		50	3.60
		10 poles	41 A (IEC)		JB6-10	1SNK906310R0000		20	7.40
		50 poles	41 A (IEC)		JB6-50	1SNK906350R0000		10	38.10
4	Cross spacing jumpers	3 poles	32 A (IEC)	Orange	JB85-3	1SNK900603R0000		10	2.80
5	Circuit separators	0 mm	0 in	Dark grey	CS	1SNK900101R0000		20	0.20
		3 mm	0.118 in		CS-R1	1SNK900103R0000		20	5.20
6	Test adapters	For test plugs DIA 2 mm 0.079 in		Dark grey	TP2	1SNK900203R0000		20	1.70
		For test plugs DIA 4 mm 0.157 in			TP4	1SNK900205R0000		20	2.40
7	Test connectors	End module, 5.2 mm 0.205 in		Dark grey	TC5-R1	1SNK900201R0000		10	5.20
8	Spacers	0.8 mm	0.031 in	Dark grey	ES-TC6	1SNK900105R0000		10	0.80
9	Terminal block markers	Blank marker		White	MG-CPM 13 41791	1SNB041791R0612		1680	0.27
		Blank card			MC612	1SNK150000R0000		22	10.00
					MC612PA	1SNK159999R0000		20	11.00
		Universal wire markers holder		Grey	UMH	1SNK900611R0000		10	0.20

Complete list of accessories is indicated in the terminal block datasheet including end stops.
Some accessories such as jumper bars may modify the terminal block's ratings: Complete information available in the accessories section of the catalog.

Ground screw clamp terminal blocks

Description		Color	Type	Part Number		Pkg qty	Weight (1 pce) g
Ground	Profile aligned with ZS6-3S	Green-yellow	ZS6-3S-PE	1SNK506151R0000		25	16.20

1SNK161067S0201

Technical data valid for copper conductors only.

ZS6-4S screw clamp terminal blocks

Feed-through with 4 connections - 6 mm 0.236 in spacing

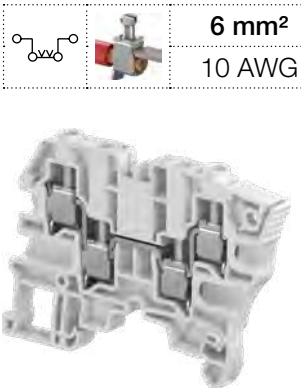

6 mm²
10 AWG

1SNK161078V0014

ZS6-4S

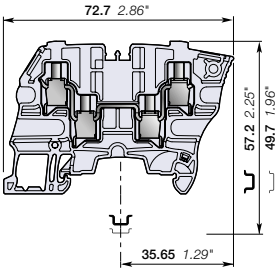

6 mm 0.236 in spacing

Description

- High density wiring (one potential distribution on 4 independent screw clamps) in a very low profile and just 6 mm 0.236 in spacing,
- Recommended for energy markets and highly demanding applications requiring that only one conductor be connected per clamp.

Ordering details

Description	Color	Type	Part Number		Pkg qty	Weight (1 pce) g
Feed-through	Grey	ZS6-4S	1SNK506012R0000		50	15.00
	Blue	ZS6-4S-BL	1SNK506022R0000		50	15.00
	Yellow	ZS6-4S-YL	1SNK506068R0000		50	15.00

Main technical data

Connecting capacity		IEC	UL - CSA
1 conductor per clamp	Rigid: Solid/Stranded	0.2 ... 6 mm²	24 ... 10 AWG
	Flexible without ferrule	0.22... 6 mm²	
	Flexible with non insulated ferrule	0.22 ... 4 mm²	24 ... 12 AWG
	Flexible with insulated ferrule	0.22 ... 4 mm²	24 ... 12 AWG
	Gauge	A4-B3	
2 conductors per clamp	Rigid: Solid/Stranded	0.2 ... 2.5 mm²	24 ... 14 AWG
	Flexible without ferrule	0.2 ... 2.5 mm²	
	Flexible with twin ferrule	0.22 ... 2.5 mm²	24 ... 14 AWG
Rated current / Rated cross section		32 A / 4 mm²	30 A / 10 AWG
Maximum current / Maximum cross section		39 A / 6 mm²	
Rated short-time withstand current (1s)		480 A	
Short Circuit Current Rating (with specific conditions)			100 kA
Rated voltage		800 V	600 V
Impulse withstand voltage		8000 V	
Protection		IP20	NEMA 1
Increased safety Ex e		550 V 29 A IEC/EN 60079-7 - IM2 II 2 GD Ex eb I/II/IIIC – 600 V 30 A	

Mounting instructions

Rail	TH 35-7.5, TH 35-15
Wire stripping length	10.5 mm 0.413 in
Tool	Flat screwdriver Ø 4 mm Ø 0.157 in
Torque	0.75 Nm ± 0.05 6.64 lb.in ± 0.443

The connecting capacity data for one Rigid: Solid/Stranded, or one Flexible conductor (when applicable) is a mandatory information required by IEC, UL and CSA standards (Copper conductors). All other data are provided as supplementary information only. For more details, please consult our CB, UL or CSA certificates and technical datasheet available on http://www.TE.com

CE, CB, RoHS, USR, CSA, EAC Ex, ATEX, IECEx, BR-Ex e II, Haz Loc, BV, DNV

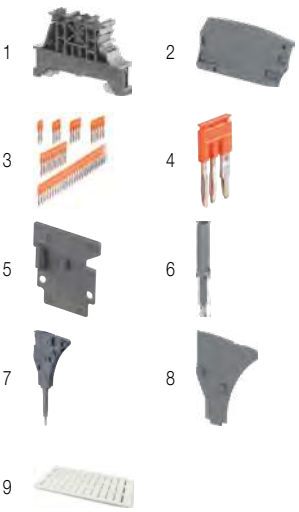

Accessories

	Description			Color	Type	Part Number		Pkg qty	Weight (1 pce) g
1	End stops	10 mm	0.394 in	Dark grey	BAM4	1SNK900001R0000		50	14.00
2	End sections	2.2 mm	0.087 in	Dark grey	ES6-4S	1SNK505911R0000		20	3.10
3	Jumper bars	2 poles	41 A (IEC)	Orange	JB6-2	1SNK906302R0000		50	1.30
		3 poles	41 A (IEC)		JB6-3	1SNK906303R0000		50	2.10
		4 poles	41 A (IEC)		JB6-4	1SNK906304R0000		50	2.90
		5 poles	41 A (IEC)		JB6-5	1SNK906305R0000		50	3.60
		10 poles	41 A (IEC)		JB6-10	1SNK906310R0000		20	7.40
		50 poles	41 A (IEC)		JB6-50	1SNK906350R0000		10	38.10
4	Cross spacing jumpers	3 poles	32 A (IEC)	Orange	JB85-3	1SNK900603R0000		10	2.80
5	Circuit separators	0 mm	0 in	Dark grey	CS	1SNK900101R0000		20	0.20
		3 mm	0.118 in		CS-R1	1SNK900103R0000		20	5.20
6	Test adapters	For test plugs DIA 2 mm 0.079 in		Dark grey	TP2	1SNK900203R0000		20	1.70
		For test plugs DIA 4 mm 0.157 in			TP4	1SNK900205R0000		20	2.40
7	Test connectors	End module, 5.2 mm 0.205 in		Dark grey	TC5-R1	1SNK900201R0000		10	5.20
8	Spacers	0.8 mm	0.031 in	Dark grey	ES-TC6	1SNK900105R0000		10	0.80
9	Terminal block markers	Blank marker		White	MG-CPM 13 41791	1SNB041791R0612		1680	0.27
		Blank card			MC612	1SNK150000R0000		22	10.00
					MC612PA	1SNK159999R0000		20	11.00
		Universal wire markers holder		Grey	UMH	1SNK900611R0000		10	0.20

Complete list of accessories is indicated in the terminal block datasheet including end stops.
Some accessories such as jumper bars may modify the terminal block's ratings: Complete information available in the accessories section of the catalog.

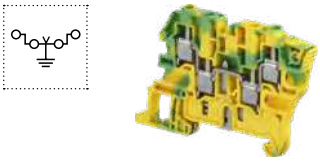

Ground screw clamp terminal blocks

Description		Color	Type	Part Number		Pkg qty	Weight (1 pce) g
Ground	Profile aligned with ZS6-4S	Green-yellow	ZS6-4S-PE	1SNK506152R0000		25	19.40

1SNK161068S0201

Technical data valid for copper conductors only.

ZS10 screw clamp terminal blocks
Feed-through - 8 mm 0.315 in spacing

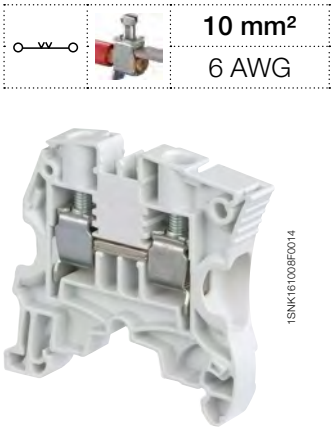

10 mm²	
6 AWG	

1SNK161009F0014

ZS10

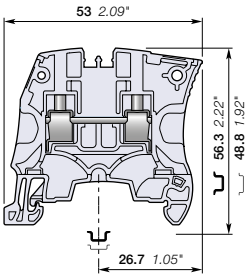

8 mm 0.315 in spacing

Description

- Save space by connecting conductors up to 10 mm² (without insulated ferrule, CB certified) 6 AWG in just 8 mm 0.315 in spacing,
- Perfectly adapted to solar applications: voltage is rated 1000 V AC / DC IEC.

Ordering details

Description	Color	Type	Part Number		Pkg qty	Weight (1 pce) g
Feed-through	Grey	ZS10	1SNK508010R0000		50	14.10
	Blue	ZS10-BL	1SNK508020R0000		50	14.10
	Orange	ZS10-OR	1SNK508030R0000		50	14.10
	Yellow	ZS10-YL	1SNK508060R0000		50	14.10
	Green	ZS10-GN	1SNK508061R0000		50	14.10
	Red	ZS10-RD	1SNK508062R0000		50	14.10
	Purple	ZS10-PR	1SNK508063R0000		50	14.10
	Brown	ZS10-BR	1SNK508064R0000		50	14.10
	White	ZS10-WH	1SNK508065R0000		50	14.10
	Black	ZS10-BK	1SNK508066R0000		50	14.10

Main technical data

Connecting capacity		IEC	UL - CSA
1 conductor per clamp	Rigid: Solid/Stranded	0.5 ... 10 mm²	24 ... 6 AWG
	Flexible without ferrule	0.5 ... 10 mm²	
	Flexible with non insulated ferrule	0.5 ... 10 mm²	24 ... 8 AWG
	Flexible with insulated ferrule	0.5 ... 6 mm²	24 ... 10 AWG
	Gauge	A5-B5	
2 conductors per clamp	Rigid: Solid/Stranded	0.5 ... 4 mm²	20 ... 12 AWG
	Flexible without ferrule	0.5 ... 4 mm²	
	Flexible with twin ferrule	0.5 ... 4 mm²	20 ... 12 AWG
Rated current / Rated cross section		57 A / 10 mm²	42 A / 6 AWG
Rated short-time withstand current (1s)		1200 A	
Short Circuit Current Rating (with specific conditions)			100 kA
Rated voltage		1000 V	600 V
Impulse withstand voltage		8000 V	
Protection		IP20	NEMA 1
Increased safety Ex e		693 V 57 A IEC/EN 60079-7 - IM2 II 2 GD Ex eb I/II/IIIC – 600 V 42 A UL 60079-7 - Class I, Zone 1, AEx e II, Ex e II U	

The connecting capacity data for one Rigid: Solid/Stranded, or one Flexible conductor (when applicable) is a mandatory information required by IEC, UL and CSA standards (Copper conductors). All other data are provided as supplementary information only. For more details, please consult our CB, UL or CSA certificates and technical datasheet available on http://www.TE.com

CE, CB, RoHS, USR CNR, CSA, EAC Ex, ATEX, IECEx, BR-Ex e II, Haz Loc, BV, DNV, Rina

Mounting instructions

Rail	TH 35-7.5, TH 35-15
Wire stripping length	12 mm 0.472 in
Tool	Flat screwdriver Ø 4 mm Ø 0.157 in
Torque	1.3 Nm ± 0.3 11.5 lb.in ± 2.65

Accessories

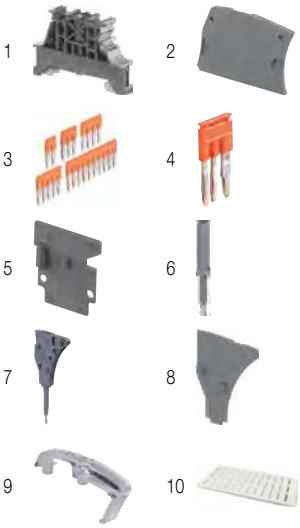

	Description			Color	Type	Part Number		Pkg qty	Weight (1 pce) g
1	End stops	10 mm	0.394 in	Dark grey	BAM4	1SNK900001R0000		50	14.00
2	End sections	2.2 mm	0.087 in	Dark grey	ES4	1SNK505910R0000		20	2.20
3	Jumper bars	2 poles	57 A (IEC)	Orange	JB8-2	1SNK908302R0000		50	2.70
		3 poles	57 A (IEC)		JB8-3	1SNK908303R0000		50	4.10
		4 poles	57 A (IEC)		JB8-4	1SNK908304R0000		50	5.60
		5 poles	57 A (IEC)		JB8-5	1SNK908305R0000		40	7.00
		10 poles	57 A (IEC)		JB8-10	1SNK908310R0000		20	14.20
4	Cross spacing jumpers	3 poles	32 A (IEC)	Orange	JB85-3	1SNK900603R0000		10	2.80
5	Circuit separators	0 mm	0 in	Dark grey	CS	1SNK900101R0000		20	0.20
		3 mm	0.118 in		CS-R1	1SNK900103R0000		20	5.20
6	Test adapters	For test plugs DIA 2 mm 0.079 in		Dark grey	TP2	1SNK900203R0000		20	1.70
		For test plugs DIA 4 mm 0.157 in			TP4	1SNK900205R0000		20	2.40
7	Test connectors	5.2 mm 0.205 in spacing		Dark grey	TC5	1SNK900200R0000		10	5.20
		End module, 5.2 mm 0.205 in			TC5-R1	1SNK900201R0000		10	5.20
8	Spacers	2.8 mm	0.110 in	Dark grey	ES-TC8	1SNK900104R0000		10	1.40
9	Protecting covers	8 mm 0.315 in spacing		Transparent	PL8	1SNK900620R0000		10	2.60
10	Terminal block markers	Blank marker		White	MG-CPM 13 41791	1SNB041791R0612		1680	0.27
		Blank card			MC812	1SNK160000R0000		22	10.00
					MC812PA	1SNK169999R0000		20	14.00
		Universal wire markers holder		Grey	UMH	1SNK900611R0000		10	0.20

Complete list of accessories is indicated in the terminal block datasheet including end stops.
Some accessories such as jumper bars may modify the terminal block's ratings: Complete information available in the accessories section of the catalog.

Ground screw clamp terminal blocks

Description		Color	Type	Part Number		Pkg qty	Weight (1 pce) g
Ground	Profile aligned with ZS10	Green-yellow	ZS10-PE	1SNK508150R0000		20	22.50

1SNK161004S0201

Technical data valid for copper conductors only.

ZS16 screw clamp terminal blocks
Feed-through - 10 mm 0.394 in spacing

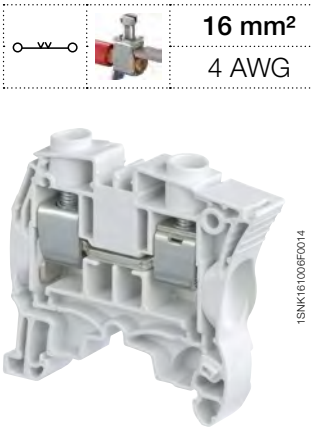

16 mm²	
4 AWG	

1SNK161006F0014

ZS16

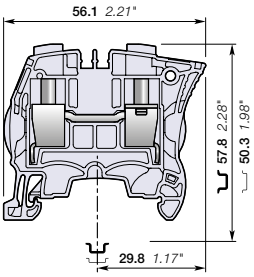

10 mm 0.394 in spacing

Description

- Save space by connecting conductors up to 16 mm² (without insulated ferrule, CB certified) 4 AWG in just 10 mm 0.394 in spacing,
- Perfectly adapted to solar applications: voltage is rated 1000 V AC / DC IEC.

Ordering details

Description	Color	Type	Part Number		Pkg qty	Weight (1 pce) g
Feed-through	Grey	ZS16	1SNK510010R0000		25	20.20
	Blue	ZS16-BL	1SNK510020R0000		25	20.20
	Orange	ZS16-OR	1SNK510030R0000		25	20.20

Main technical data

Connecting capacity		IEC	UL - CSA
1 conductor per clamp	Rigid: Solid/Stranded	0.5 ... 16 mm²	24 ... 4 AWG
	Flexible without ferrule	0.5 ... 16 mm²	
	Flexible with non insulated ferrule	0.5 ... 16 mm²	24 ... 4 AWG
	Flexible with insulated ferrule	0.5 ... 10 mm²	24 ... 8 AWG
	Gauge	A6-B6	
2 conductors per clamp	Rigid: Solid/Stranded	0.5 ... 6 mm²	20 ... 10 AWG
	Flexible without ferrule	0.5 ... 6 mm²	
	Flexible with twin ferrule	0.5 ... 6 mm²	20 ... 10 AWG
Rated current / Rated cross section		76 A / 16 mm²	67 A / 4 AWG
Rated short-time withstand current (1s)		1920 A	
Short Circuit Current Rating (with specific conditions)			100 kA
Rated voltage		1000 V	600 V
Impulse withstand voltage		8000 V	
Protection		IP20	NEMA 1
Increased safety Ex e		693 V 76 A IEC/EN 60079-7 - IM2 II 2 GD Ex eb I/II/IIIC – 600 V 67 A UL 60079-7 - Class I, Zone 1, AEx e II, Ex e II U	

Mounting instructions

Rail	TH 35-7.5, TH 35-15
Wire stripping length	13.5 mm 0.531 in
Tool	Flat screwdriver Ø 5.5 mm Ø 0.217 in
Torque	1.8 Nm ± 0.2 15.9 lb.in ± 1.77

The connecting capacity data for one Rigid: Solid/Stranded, or one Flexible conductor (when applicable) is a mandatory information required by IEC, UL and CSA standards (Copper conductors). All other data are provided as supplementary information only. For more details, please consult our CB, UL or CSA certificates and technical datasheet available on http://www.TE.com

CE, CB, RoHS, USR CNR, CSA, EAC Ex, ATEX, IECEx, BR-Ex e II, Haz Loc, BV, DNV, Rina

Accessories

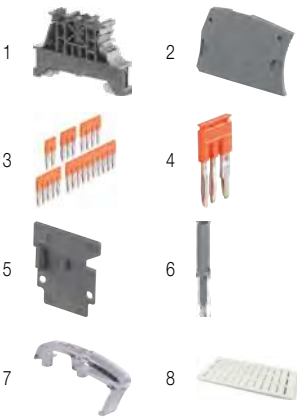

	Description			Color	Type	Part Number		Pkg qty	Weight (1 pce) g
1	End stops	10 mm	0.394 in	Dark grey	BAM4	1SNK900001R0000		50	14.00
2	End sections	2.2 mm	0.087 in	Dark grey	ES4	1SNK505910R0000		20	2.20
3	Jumper bars	2 poles	76 A (IEC)	Orange	JB10-2	1SNK910302R0000		50	4.60
		3 poles	76 A (IEC)		JB10-3	1SNK910303R0000		50	7.10
		4 poles	76 A (IEC)		JB10-4	1SNK910304R0000		40	9.40
		5 poles	76 A (IEC)		JB10-5	1SNK910305R0000		30	12.00
		10 poles	76 A (IEC)		JB10-10	1SNK910310R0000		20	24.00
4	Cross spacing jumpers	3 poles	32 A (IEC)	Orange	JB85-3	1SNK900603R0000		10	2.80
5	Circuit separators	0 mm	0 in	Dark grey	CS	1SNK900101R0000		20	0.20
		3 mm	0.118 in		CS-R1	1SNK900103R0000		20	5.20
6	Test adapters	For test plugs DIA 2 mm 0.079 in		Dark grey	TP2	1SNK900203R0000		20	1.70
		For test plugs DIA 4 mm 0.157 in			TP4	1SNK900205R0000		20	2.40
7	Protecting covers	10 mm 0.394 in spacing		Transparent	PL10	1SNK900621R0000		10	3.10
8	Terminal block markers	Blank marker		White	MG-CPM 13 41791	1SNB041791R0612		1680	0.27
		Blank card			MC812	1SNK160000R0000		22	10.00
					MC812PA	1SNK169999R0000		20	14.00
		Universal wire markers holder		Grey	UMH	1SNK900611R0000		10	0.20

Complete list of accessories is indicated in the terminal block datasheet including end stops.
Some accessories such as jumper bars may modify the terminal block's ratings: Complete information available in the accessories section of the catalog.

Ground screw clamp terminal blocks

Description		Color	Type	Part Number		Pkg qty	Weight (1 pce) g
Ground	Profile aligned with ZS16	Green-yellow	ZS16-PE	1SNK510150R0000		20	32.00

1SNK161017S0201

Technical data valid for copper conductors only.

ZS25 screw clamp terminal blocks
Feed-through - 12 mm 0.472 in spacing

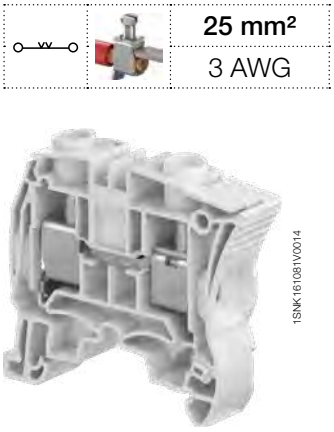

25 mm²
3 AWG

1SNK161081V0014

ZS25

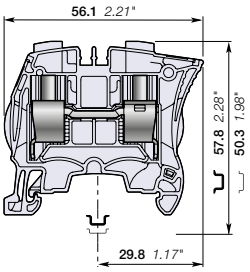

12 mm 0.472 in spacing

Description

- Save space by connecting conductors up to 25 mm² (without insulated ferrule, CB certified) 3 AWG in just 12 mm 0.472 in spacing,
- Perfectly adapted to solar applications: voltage is rated 1000 V AC / DC IEC.

Ordering details

Description	Color	Type	Part Number		Pkg qty	Weight (1 pce) g
Feed-through	Grey	ZS25	1SNK512010R0000		25	21.40
	Blue	ZS25-BL	1SNK512020R0000		25	21.40
	Yellow	ZS25-YL	1SNK512060R0000		25	21.40

Main technical data

Connecting capacity		IEC	UL - CSA
1 conductor per clamp	Rigid: Solid/Stranded	0.5 ... 25 mm²	24 ... 3 AWG
	Flexible without ferrule	0.5 ... 25 mm²	
	Flexible with non insulated ferrule	0.5 ... 16 mm²	24 ... 4 AWG
	Flexible with insulated ferrule	0.5 ... 16 mm²	24 ... 8 AWG
	Gauge	A6-B6	
2 conductors per clamp	Rigid: Solid/Stranded	0.5 ... 10 mm²	20 ... 10 AWG
	Flexible without ferrule	0.5 ... 10 mm²	
	Flexible with twin ferrule	0.5 ... 10 mm²	20 ... 10 AWG
Rated current / Rated cross section		76 A / 16 mm²	100 A / 3 AWG
Maximum current / Maximum cross section		101 A / 25 mm²	
Rated short-time withstand current (1s)		1920 A	
Short Circuit Current Rating (with specific conditions)			100 kA
Rated voltage		1000 V	600 V
Impulse withstand voltage		8000 V	
Protection		IP20	NEMA 1
Increased safety Ex e		693 V 69 A IEC/EN 60079-7 - IM2 II 2 GD Ex eb I/II/IIIC – 600 V 100 A	

Mounting instructions

Rail	TH 35-7.5, TH 35-15
Wire stripping length	13.5 mm 0.531 in
Tool	Flat screwdriver Ø 5.5 mm Ø 0.217 in
Torque	1.8 Nm ± 0.2 15.9 lb.in ± 1.77

The connecting capacity data for one Rigid: Solid/Stranded, or one Flexible conductor (when applicable) is a mandatory information required by IEC, UL and CSA standards (Copper conductors). All other data are provided as supplementary information only. For more details, please consult our CB, UL or CSA certificates and technical datasheet available on http://www.TE.com

CE, CB, RoHS, USR CNR, CSA, EAC Ex, ATEX, IECEx, BR-Ex e II, Haz Loc, BV, DNV

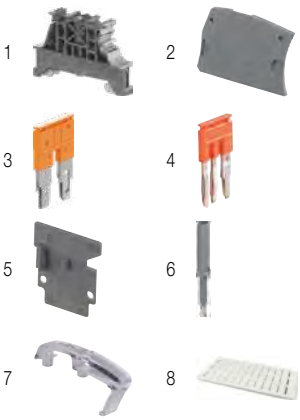

Accessories

	Description			Color	Type	Part Number		Pkg qty	Weight (1 pce) g
1	End stops	10 mm	0.394 in	Dark grey	BAM4	1SNK900001R0000		50	14.00
2	End sections	2.2 mm	0.087 in	Dark grey	ES4	1SNK505910R0000		20	2.20
3	Jumper bars	2 poles	76 A (IEC)	Orange	JB12-2	1SNK912302R0000		50	4.90
		3 poles	76 A (IEC)		JB12-3	1SNK912303R0000		50	7.60
		5 poles	76 A (IEC)		JB12-5	1SNK912305R0000		20	12.90
4	Cross spacing jumpers	3 poles	32 A (IEC)	Orange	JB85-3	1SNK900603R0000		10	2.80
5	Circuit separators	0 mm	0 in	Dark grey	CS	1SNK900101R0000		20	0.20
		3 mm	0.118 in		CS-R1	1SNK900103R0000		20	5.20
6	Test adapters	For test plugs DIA 2 mm 0.079 in		Dark grey	TP2	1SNK900203R0000		20	1.70
		For test plugs DIA 4 mm 0.157 in			TP4	1SNK900205R0000		20	2.40
7	Protecting covers	10 mm 0.394 in spacing		Transparent	PL10	1SNK900621R0000		10	3.10
8	Terminal block markers	Blank marker		White	MG-CPM 13 41791	1SNB041791R0612		1680	0.27
		Blank card			MC812	1SNK160000R0000		22	10.00
					MC812PA	1SNK169999R0000		20	14.00
		Universal wire markers holder		Grey	UMH	1SNK900611R0000		10	0.20

Complete list of accessories is indicated in the terminal block datasheet including end stops.
Some accessories such as jumper bars may modify the terminal block's ratings: Complete information available in the accessories section of the catalog.

Ground screw clamp terminal blocks

Description		Color	Type	Part Number		Pkg qty	Weight (1 pce) g
Ground	Profile aligned with ZS25	Green-yellow	ZS25-PE	1SNK512150R0000		20	38.00

1SNK161078S0201

Technical data valid for copper conductors only.

ZS35 screw clamp terminal blocks
Feed-through - 16 mm 0.630 in spacing

ZS35

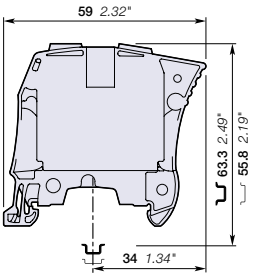

16 mm 0.630 in spacing

	35 mm²
	0 AWG

Description

Closed terminal block:
- No end section needed,
- Optimized rigidity,
- Perfectly adapted to solar applications: voltage is rated 1000 V AC / DC IEC.

Ordering details

Description		Color	Type	Part Number		Pkg qty	Weight (1 pce) g
Feed-through	Closed block	Grey	ZS35	1SNK516010R0000		20	53.40
		Blue	ZS35-BL	1SNK516020R0000		20	53.40
		Orange	ZS35-OR	1SNK516030R0000		20	53.40

Main technical data

Connecting capacity		IEC	UL - CSA
1 conductor per clamp	Rigid: Solid/Stranded	6 ... 35 mm²	10 ... 0 AWG
	Flexible without ferrule	6 ... 35 mm²	
	Flexible with non insulated ferrule	4 ... 35 mm²	10 ... 2 AWG
	Flexible with insulated ferrule	4 ... 35 mm²	10 ... 2 AWG
	Gauge	A9-B9	
2 conductors per clamp	Rigid: Solid/Stranded	6 ... 16 mm²	10 ... 6 AWG
	Flexible without ferrule	6 ... 16 mm²	
	Flexible with twin ferrule	4 ... 10 mm²	12 ... 8 AWG
Rated current / Rated cross section		125 A / 35 mm²	150 A / 0 AWG
Rated short-time withstand current (1s)		4200 A	
Short Circuit Current Rating (with specific conditions)			100 kA
Rated voltage		1000 V	600 V
Impulse withstand voltage		8000 V	
Protection		IP10	NEMA 1
Increased safety Ex e		693 V 125 A IEC/EN 60079-7 - IM2 II 2 GD Ex eb I/II/IIIC – 600 V 150 A UL 60079-7 - Class I, Zone 1, AEx e II	

Mounting instructions

Rail	TH 35-7.5, TH 35-15
Wire stripping length	17 mm 0.669 in
Tool	Flat screwdriver Ø 6.5 mm Ø 0.256 in
Torque	2.9 Nm ± 0.1 25.7 lb.in ± 0.885

The connecting capacity data for one Rigid: Solid/Stranded, or one Flexible conductor (when applicable) is a mandatory information required by IEC, UL and CSA standards (Copper conductors). All other data are provided as supplementary information only. For more details, please consult our CB, UL or CSA certificates and technical datasheet available on http://www.TE.com

CE, CB, RoHS, USR, CSA, EAC Ex, ATEX, IECEx, BR-Ex e II, Haz Loc, BV, DNV, Rina

Accessories

	Description			Color	Type	Part Number		Pkg qty	Weight (1 pce) g
1	**End stops**	10 mm	0.394 in	Dark grey	BAZH1	1SNK900102R0000		20	24.00
2	**Jumper bars**	2 poles	125 A (IEC)	Orange	JB16-2	1SNK916302R0000		10	10.00
		3 poles	125 A (IEC)		JB16-3	1SNK916303R0000		10	16.00
		4 poles	125 A (IEC)		JB16-4	1SNK916304R0000		10	22.00
		5 poles	125 A (IEC)		JB16-5	1SNK916305R0000		10	28.00
		10 poles	125 A (IEC)		JB16-10	1SNK916310R0000		10	56.60
3	**Circuit separators**	3 mm	0.118 in	Dark grey	CS-R1	1SNK900103R0000		20	5.20
4	**Protecting covers**	16 mm 0.630 in spacing		Transparent	PL16	1SNK900622R0000		10	4.60
5	**Terminal block markers**	Blank marker		White	MG-CPM 13 41791	1SNB041791R0612		1680	0.27
		Blank card			MC812	1SNK160000R0000		22	10.00
					MC812PA	1SNK169999R0000		20	14.00
		Universal wire markers holder		Grey	UMH	1SNK900611R0000		10	0.20

Complete list of accessories is indicated in the terminal block datasheet including end stops.
Some accessories such as jumper bars may modify the terminal block's ratings: Complete information available in the accessories section of the catalog.

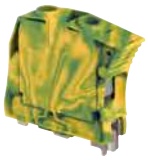

Ground screw clamp terminal blocks

Description		Color	Type	Part Number		Pkg qty	Weight (1 pce) g
Ground	Profile aligned with ZS35	Green-yellow	ZS35-PE	1SNK516150R0000		20	81.80

1SNK161019S0201

Technical data valid for copper conductors only.

ZS50 screw clamp terminal blocks
Feed-through - 16 mm 0.630 in spacing

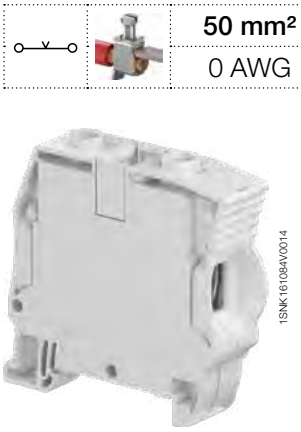

ZS50

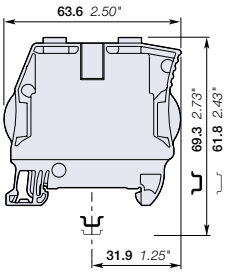

16 mm 0.630 in spacing

	50 mm²
	0 AWG

Description

Combine high performance with compact dimensions:
- Connect conductors up to 50 mm² (CB certified) 0 AWG in just 16 mm 0.630 in spacing,
- Perfectly adapted to solar applications: 1250 V DC (1000 V AC) IEC and 1000 V UL,
- Closed terminal block: no end section needed, optmized rigidity.

Ordering details

Description		Color	Type	Part Number		Pkg qty	Weight (1 pce) g
Feed-through	Closed block	Grey	ZS50	1SNK516011R0000		20	52.90
		Blue	ZS50-BL	1SNK516021R0000		20	52.90
		Yellow	ZS50-YL	1SNK516060R0000		20	52.90
		Red	ZS50-RD	1SNK516063R0000		20	52.90
		Black	ZS50-BK	1SNK516064R0000		20	52.90

Main technical data

Connecting capacity		IEC	UL - CSA
1 conductor per clamp	Rigid: Solid/Stranded	1 ... 50 mm²	18 ... 0 AWG
	Flexible without ferrule	1 ... 50 mm²	
	Flexible with non insulated ferrule	1 ... 50 mm²	18 ... 0 AWG
	Flexible with insulated ferrule	1 ... 50 mm²	18 ... 0 AWG
	Gauge	Dia.11	
2 conductors per clamp	Rigid: Solid/Stranded	1 ... 25 mm²	18 ... 4 AWG
	Flexible without ferrule	1 ... 25 mm²	
	Flexible with twin ferrule	1 ... 16 mm²	18 ... 4 AWG
Rated current / Rated cross section		150 A / 50 mm²	140 A / 0 AWG
Rated short-time withstand current (1s)		6000 A	
Short Circuit Current Rating (with specific conditions)			100 kA
Rated voltage		1000 V	1000 V
Impulse withstand voltage		8000 V	
Protection		IP10	NEMA 1
Increased safety Ex e		880 V 150 A IEC/EN 60079-7 - IM2 II 2 GD Ex eb I/II/IIIC	

Mounting instructions

Rail	TH 35-7.5, TH 35-15
Wire stripping length	17 mm 0.669 in
Tool	Flat screwdriver Ø 6.5 mm Ø 0.256 in
Torque	3 Nm ± 0.50 26.6 lb.in ± 4.43

The connecting capacity data for one Rigid: Solid/Stranded, or one Flexible conductor (when applicable) is a mandatory information required by IEC, UL and CSA standards (Copper conductors). All other data are provided as supplementary information only. For more details, please consult our CB, UL or CSA certificates and technical datasheet available on http://www.TE.com

CE, CB, RoHS, USR, CSA, EAC Ex, ATEX, IECEx, BR-Ex e II, Haz Loc, BV, DNV

Accessories

	Description			Color	Type	Part Number		Pkg qty	Weight (1 pce) g
1	**End stops**	10 mm	0.394 in	Dark grey	BAZH1	1SNK900102R0000		20	24.00
2	**Jumper bars**	2 poles	125 A (IEC)	Orange	JB16-2	1SNK916302R0000		10	10.00
		3 poles	125 A (IEC)		JB16-3	1SNK916303R0000		10	16.00
		4 poles	125 A (IEC)		JB16-4	1SNK916304R0000		10	22.00
		5 poles	125 A (IEC)		JB16-5	1SNK916305R0000		10	28.00
		10 poles	125 A (IEC)		JB16-10	1SNK916310R0000		10	56.60
3	**Terminal block markers**	Blank marker		White	MG-CPM 13 41791	1SNB041791R0612		1680	0.27
		Blank card			MC812	1SNK160000R0000		22	10.00
					MC812PA	1SNK169999R0000		20	14.00
		Universal wire markers holder		Grey	UMH	1SNK900611R0000		10	0.20

Complete list of accessories is indicated in the terminal block datasheet including end stops.
Some accessories such as jumper bars may modify the terminal block's ratings: Complete information available in the accessories section of the catalog.

Ground screw clamp terminal blocks

Description		Color	Type	Part Number		Pkg qty	Weight (1 pce) g
Ground	Profile aligned with ZS50	Green-yellow	ZS50-PE	1SNK516151R0000		20	83.00

1SNK161069S0201

Technical data valid for copper conductors only.

ZS70 screw clamp terminal blocks
Feed-through - 22 mm 0.866 in spacing

ZS70

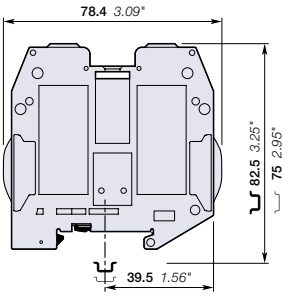

22 mm 0.866 in spacing

70 mm²
00 AWG

Description

Closed terminal block:
- No end section needed,
- Optimized rigidity,
- Perfectly adapted to solar applications: 1250 V DC (1000 V AC) IEC and 1000 V UL.

Ordering details

Description		Color	Type	Part Number		Pkg qty	Weight (1 pce) g
Feed-through	Closed block	Grey	ZS70	1SNK522010R0000		10	158.10
		Blue	ZS70-BL	1SNK522020R0000		10	158.10
		Yellow	ZS70-YL	1SNK522060R0000		10	158.10

Main technical data

Connecting capacity		IEC	UL - CSA
1 conductor per clamp	Rigid: Solid/Stranded	16 ... 95 mm²	4 ... 00 AWG
	Flexible without ferrule	16 ... 70 mm²	
	Flexible with non insulated ferrule	16 ... 50 mm²	
	Flexible with insulated ferrule	16 ... 50 mm²	
	Gauge	B11	
2 conductors per clamp	Rigid: Solid/Stranded	16 ... 35 mm²	4 ... 2 AWG
	Flexible without ferrule	16 ... 35 mm²	
	Flexible with twin ferrule	16 mm²	6 AWG
Rated current / Rated cross section		192 A / 70 mm²	159 A / 00 AWG
Rated short-time withstand current (1s)		8400 A	
Short Circuit Current Rating (with specific conditions)			100 kA
Rated voltage		1000 V	1000 V
Impulse withstand voltage		8000 V	
Protection		IP10	NEMA 1
Increased safety Ex e		693 V 192 A IEC/EN 60079-7 - IM2 II 2 GD Ex eb I/II/IIIC – 600 V 159 A UL 60079-7 - Class I, Zone 1, AEx e II, Ex e II U	

Mounting instructions

Rail		TH 35-7.5, TH 35-15
Wire stripping length		25 mm 0.984 in
Tool		Allen key Ø 6 mm Ø 0.236 in
Torque		6.5 Nm ± 0.5 57.5 lb.in ± 4.43

The connecting capacity data for one Rigid: Solid/Stranded, or one Flexible conductor (when applicable) is a mandatory information required by IEC, UL and CSA standards (Copper conductors). All other data are provided as supplementary information only. For more details, please consult our CB, UL or CSA certificates and technical datasheet available on http://www.TE.com

CE, CB, RoHS, USR CNR, CSA, EAC Ex, ATEX, IECEx, BR-Ex e II, Haz Loc, BV, DNV, Rina

Accessories

1

2

3

	Description			Color	Type	Part Number		Pkg qty	Weight (1 pce) g
1	**End stops**	10 mm	0.394 in	Dark grey	BAZH1	1SNK900102R0000		20	24.00
2	**Jumper bars**	2 poles	192 A (IEC)		JB22-2	1SNK922302R0000		5	27.00
		3 poles	192 A (IEC)		JB22-3	1SNK922303R0000		5	43.30
		5 poles	192 A (IEC)		JB22-5	1SNK922305R0000		5	76.10
		10 poles	192 A (IEC)		JB22-10	1SNK922310R0000		5	157.40
3	**Terminal block markers**	Blank marker		White	MG-CPM 13 41791	1SNB041791R0612		1680	0.27
		Blank card			MC812	1SNK160000R0000		22	10.00
					MC812PA	1SNK169999R0000		20	14.00
		Universal wire markers holder		Grey	UMH	1SNK900611R0000		10	0.20

Complete list of accessories is indicated in the terminal block datasheet including end stops.
Some accessories such as jumper bars may modify the terminal block's ratings: Complete information available in the accessories section of the catalog.

Ground screw clamp terminal blocks

Description		Color	Type	Part Number		Pkg qty	Weight (1 pce) g
Ground	Profile aligned with ZS70	Green-yellow	ZS70-PE	1SNK522150R0000		10	222.00

Technical data valid for copper conductors only.

1SNK161021S0201

3

ZS95 screw clamp terminal blocks
Feed-through - 26 mm 1.024 in spacing

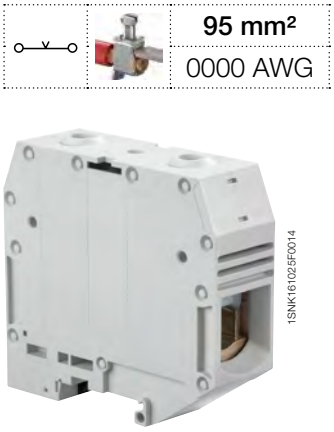

ZS95

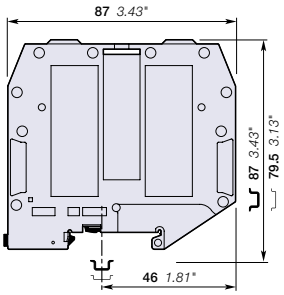

26 mm 1.024 in spacing

Description

Closed terminal block:
- No end section needed,
- Optimized rigidity,
- Perfectly adapted to solar applications: 1250 V DC (1000 V AC) IEC and 1000 V UL.

Ordering details

Description		Color	Type	Part Number		Pkg qty	Weight (1 pce) g
Feed-through	Closed block	Grey	ZS95	1SNK526010R0000		10	215.10
		Blue	ZS95-BL	1SNK526020R0000		10	215.10
		Yellow	ZS95-YL	1SNK526060R0000		10	215.10

Main technical data

Connecting capacity		IEC	UL - CSA
1 conductor per clamp	Rigid: Solid/Stranded	35 ... 120 mm²	2 ... 0000 AWG
	Flexible without ferrule	35 ... 95 mm²	
	Flexible with non insulated ferrule	35 ... 50 mm²	
	Flexible with insulated ferrule	35 ... 50 mm²	
	Gauge	B12	
2 conductors per clamp	Rigid: Solid/Stranded	25 ... 35 mm²	4 ... 2 AWG
	Flexible without ferrule	25 ... 35 mm²	
	Flexible with twin ferrule	16 mm²	6 AWG
Rated current / Rated cross section		232 A / 95 mm²	230 A / 0000 AWG
Rated short-time withstand current (1s)		11400 A	
Short Circuit Current Rating (with specific conditions)			100 kA
Rated voltage		1000 V	1000 V
Impulse withstand voltage		8000 V	
Protection		IP10	NEMA 1
Increased safety Ex e		693 V 232 A IEC/EN 60079-7 - IM2 II 2 GD Ex eb I/II/IIIC – 600 V 230 A UL 60079-7 - Class I, Zone 1, AEx e II	

Mounting instructions

Rail		TH 35-7.5, TH 35-15
Wire stripping length		26 mm 1.024 in
Tool		Allen key Ø 6 mm Ø 0.236 in
Torque		9.25 Nm ± 0.25 81.7 lb.in ± 2.21

The connecting capacity data for one Rigid: Solid/Stranded, or one Flexible conductor (when applicable) is a mandatory information required by IEC, UL and CSA standards (Copper conductors). All other data are provided as supplementary information only. For more details, please consult our CB, UL or CSA certificates and technical datasheet available on http://www.TE.com

CE, CB, RoHS, USR, CSA, EAC Ex, ATEX, IECEx, BR-Ex e II, Haz Loc, BV, DNV, Rina

1
2
3

Accessories

	Description			Color	Type	Part Number		Pkg qty	Weight (1 pce) g
1	**End stops**	10 mm	0.394 in	Dark grey	BAZH1	1SNK900102R0000		20	24.00
2	**Jumper bars**	2 poles	232 A (IEC)		JB26-2	1SNK926302R0000		5	41.20
		3 poles	232 A (IEC)		JB26-3	1SNK926303R0000		5	65.70
		5 poles	232 A (IEC)		JB26-5	1SNK926305R0000		5	115.70
		10 poles	232 A (IEC)		JB26-10	1SNK926310R0000		5	241.50
3	**Terminal block markers**	Blank marker		White	MG-CPM 13 41791	1SNB041791R0612		1680	0.27
		Blank card			MC812	1SNK160000R0000		22	10.00
					MC812PA	1SNK169999R0000		20	14.00
		Universal wire markers holder		Grey	UMH	1SNK900611R0000		10	0.20

Complete list of accessories is indicated in the terminal block datasheet including end stops.
Some accessories such as jumper bars may modify the terminal block's ratings: Complete information available in the accessories section of the catalog.

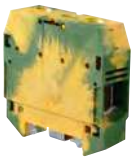

Ground screw clamp terminal blocks

Description		Color	Type	Part Number		Pkg qty	Weight (1 pce) g
Ground	Profile aligned with ZS95	Green-yellow	ZS95-PE	1SNK526150R0000		10	278.00

1SNK161023S0201

Technical data valid for copper conductors only.

ZS150 screw clamp terminal blocks
Feed-through - 31 mm 1.220 in spacing

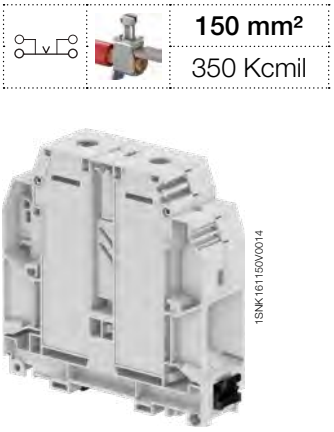

ZS150

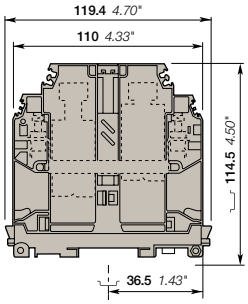

31 mm 1.220 in spacing

150 mm²	
350 Kcmil	

Description

- Perfectly adapted to solar applications : 1500V DC (1000V AC) IEC and 1000V UL,
- Closed terminal block: no end section needed, optimized rigidity,
- Ease your voltage monitoring or distribution with the 2 built-in derivations,
- Use of jumper bars requires the user to cut-out the partition.

Ordering details

Description		Color	Type	Part Number		Pkg qty	Weight (1 pce) g
Feed-through	Closed block with 2 x 10 mm² derivations.	Grey	ZS150	1SNK531010R0000		5	318.00
		Blue	ZS150-BL	1SNK531020R0000		5	318.00
		Yellow	ZS150-YL	1SNK531060R0000		5	318.00

Main technical data

Connecting capacity			IEC	UL	CSA
Main circuit with 1 conductor per clamp	Rigid: Solid/Stranded		35 ... 185 mm²	2 ... 350 Kcmil	2 ... 350 Kcmil
	Flexible without ferrule		50 ... 150 mm²		
	Flexible with insulated ferrule				
	Gauge		B14		
Derivation with 1 conductor per clamp	Rigid: Solid/Stranded		0.5 ... 16 mm²	20 ... 8 AWG	20 ... 8 AWG
	Flexible without ferrule		0.5 ... 10 mm²	20 ... 8 Kcmil	20 ... 8 Kcmil
	Gauge		B6		
Rated current / Rated cross section					
	Main circuit	Copper	309 A / 150 mm²	310 A / 350 Kcmil	310 A / 350 Kcmil
		Aluminium			
	Derivation		57 A / 10 mm²	50 A / 8 AWG	50 A / 8 AWG
Rated short-time withstand current (1s)			18000 A		
Rated voltage	V AC		1000 V	1000 V	1000 V
	V DC		1500		
Impulse withstand voltage			12000 V		
Protection			IP10	NEMA 1	
Increased safety Ex e			1000 V 309 A IEC/EN 60079-7 - IM2 II 2 GD Ex eb I/II/IIIC		

The connecting capacity data for one Rigid: Solid/Stranded, or one Flexible conductor (when applicable) is a mandatory information required by IEC, UL and CSA standards (Copper conductors). All other data are provided as supplementary information only. For more details, please consult our CB, UL or CSA certificates and technical datasheet available on http://www.TE.com

CE, CB, RoHS, USR CNR, CSA, EAC, ATEX, IECEx, BV

Mounting instructions

Rail		TH 35-7.5, TH 35-15
Main circuit		
Wire stripping length		40 mm 1.575 in
Tool		Allen key Ø 8 mm Ø 0.315 in
Torque		20 Nm 177 lb.in
Derivation		
Wire stripping length		12 mm 0.47 in
Tool		Flat screwdriver Ø 4 mm Ø 0.157 in
Torque		1.2 Nm ... 1.4 Nm 10.6 lb.in ... 12.3 lb.in

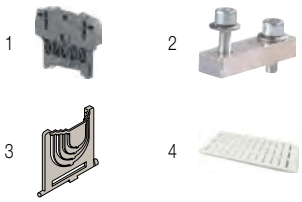

Accessories

	Description			Color	Type	Part Number		Pkg qty	Weight (1 pce) g
1	**End stops**	10 mm	0.394 in	Dark grey	BAZH1	1SNK900102R0000		20	24.00
2	**Jumper bars**	2 poles	309 A (IEC)		BJMI31.2	1SNA206053R0700		1	120.00
		3 poles	309 A (IEC)		BJMI31.3	1SNA206054R0000		1	190.00
3	**Protecting covers**				CPBP1	1SNA399788R1600		20	0.40
4	**Terminal block markers**	Blank card		White	RC1010	1SNA238000R1600		10	1.30
		Blank marker			MG-CPM 13 41791	1SNB041791R0612		1680	0.27
		Blank card			MC812	1SNK160000R0000		22	10.00
					MC812PA	1SNK169999R0000		20	14.00
		Universal wire markers holder		Grey	UMH	1SNK900611R0000		10	0.20

Complete list of accessories is indicated in the terminal block datasheet including end stops.
Some accessories such as jumper bars may modify the terminal block's ratings: Complete information available in the accessories section of the catalog.

Technical data valid for copper conductors only.

ZS240 screw clamp terminal blocks
Feed-through - 36 mm 1.417 in spacing

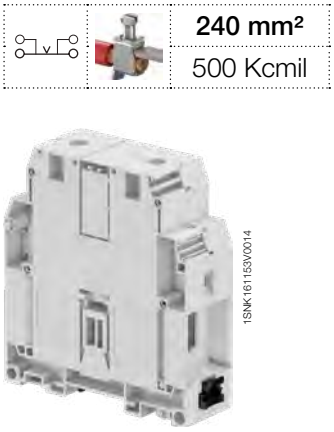

240 mm²
500 Kcmil

ZS240

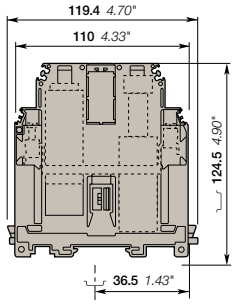

36 mm 1.417 in spacing

Description

- Perfectly adapted to solar applications : 1500V DC (1000V AC) IEC and 1000V UL,
- UL Certified for aluminum cables use - Closed terminal block: no end section needed, optimized rigidity,
- Ease your voltage monitoring or distribution with the 2 built-in derivations,
- Use of jumper bars requires the user to cut-out the partition.

Ordering details

Description		Color	Type	Part Number		Pkg qty	Weight (1 pce) g
Feed-through	Closed block with 2 x 10 mm² derivations.	Grey	ZS240	1SNK536010R0000		5	366.00
		Blue	ZS240-BL	1SNK536020R0000		5	366.00
		Yellow	ZS240-YL	1SNK536060R0000		5	366.00

Main technical data

Connecting capacity			IEC	UL	CSA
Main circuit with 1 conductor per clamp	Rigid: Solid/Stranded		50 ... 300 mm²	0 ... 500 Kcmil	0 ... 500 Kcmil
	Flexible without ferrule		50 ... 240 mm²		
	Flexible with insulated ferrule				
	Gauge		B14		
Derivation with 1 conductor per clamp	Rigid: Solid/Stranded		0.5 ... 16 mm²	20 ... 8 AWG	20 ... 8 AWG
	Flexible without ferrule		0.5 ... 10 mm²	20 ... 8 Kcmil	20 ... 8 Kcmil
	Gauge		B6		
Rated current / Rated cross section					
	Main circuit	Copper	415 A / 240 mm²	380 A / 500 Kcmil	380 A / 500 Kcmil
		Aluminium		271 / 500 Kcmil	271 / 500 Kcmil
	Derivation		57 A / 10 mm²	50 A / 8 AWG	50 A / 8 AWG
Rated short-time withstand current (1s)			28800 A		
Rated voltage	V AC		1000 V	1000 V	1000 V
	V DC		1500		
Impulse withstand voltage			12000 V		
Protection			IP10	NEMA 1	
Increased safety Ex e			1000 V 415 A IEC/EN 60079-7 - IM2 II 2 GD Ex eb I/II/IIIC		

Mounting instructions

Rail		TH 35-7.5, TH 35-15
Main circuit		
Wire stripping length		38 mm 1.496 in
Tool		Allen key Ø 8 mm Ø 0.315 in
Torque		25 Nm 221.3 lb.in
Derivation		
Wire stripping length		12 mm 0.47 in
Tool		Flat screwdriver Ø 4 mm Ø 0.157 in
Torque		1.2 Nm ... 1.4 Nm 10.6 lb.in ... 12.3 lb.in

The connecting capacity data for one Rigid: Solid/Stranded, or one Flexible conductor (when applicable) is a mandatory information required by IEC, UL and CSA standards (Copper conductors). All other data are provided as supplementary information only. For more details, please consult our CB, UL or CSA certificates and technical datasheet available on http://www.TE.com

CE, CB, RoHS, USR CNR, CSA, EAC, ATEX, IECEx, BV

Accessories

	Description			Color	Type	Part Number		Pkg qty	Weight (1 pce) g
1	**End stops**	10 mm	0.394 in	Dark grey	BAZH1	1SNK900102R0000		20	24.00
2	**Jumper bars**	2 poles	415 A (IEC)		BJMI36.2	1SNA206126R2500		1	170.00
		3 poles	415 A (IEC)		BJMI36.3	1SNA206223R0600		1	260.00
3	**Protecting covers**				CPBP2	1SNA399787R0500		20	1.30
4	**Terminal block markers**	Blank card		White	RC1010	1SNA238000R1600		10	1.30
		Blank marker			MG-CPM 13 41791	1SNB041791R0612		1680	0.27
		Blank card			MC812	1SNK160000R0000		22	10.00
					MC812PA	1SNK169999R0000		20	14.00
		Universal wire markers holder		Grey	UMH	1SNK900611R0000		10	0.20

Complete list of accessories is indicated in the terminal block datasheet including end stops.
Some accessories such as jumper bars may modify the terminal block's ratings: Complete information available in the accessories section of the catalog.

1SNK161094S0201

Technical data valid for copper conductors only.

ZS4-PE screw clamp terminal blocks
Ground - 5.2 mm 0.205 in spacing

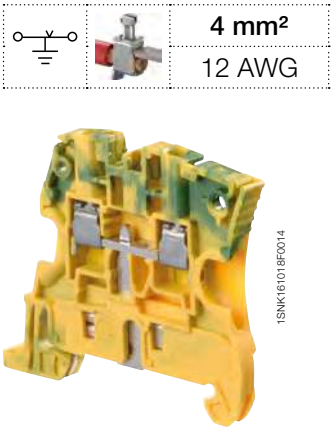

ZS4-PE

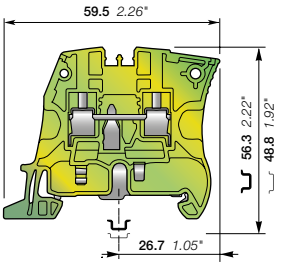

5.2 mm 0.205 in spacing

		4 mm²
		12 AWG

Description

Improve the safety of your installation in the event of a short-circuit thanks to our screwless rail contact:
- Rail contact non operator dependent,
- Performances above the requirements of IEC 60947-7-2 terminal block standard,
- Secured snap on or remove from the rail.

Ordering details

Description		Color	Type	Part Number		Pkg qty	Weight (1 pce) g
Ground	Screwless rail connection	Green-yellow	ZS4-PE	1SNK505150R0000		20	12.10

Main technical data

Connecting capacity		IEC	UL - CSA
1 conductor per clamp	Rigid: Solid/Stranded	0.2 ... 4 mm²	24 ... 12 AWG
	Flexible without ferrule	0.22 ... 4 mm²	
	Flexible with non insulated ferrule	0.22 ... 4 mm²	24 ... 12 AWG
	Flexible with insulated ferrule	0.22 ... 2.5 mm²	24 ... 14 AWG
	Gauge	A3-B3	
Rated cross section		4 mm²	12 AWG
Rated short-time withstand current (1s)		480 A	396 A
Protection		IP20	NEMA 1
Explosive atmosphere classification		IM2 II 2 GD Ex eb I/II/IIIC – Class I, Zone 1, AEx e II, Ex e II U	

Mounting instructions

Rail	TH 35-7.5, TH 35-15
Wire stripping length	10.5 mm 0.412 in
Tool	Flat screwdriver Ø 3.5 mm Ø 0.138 in
Torque	0.6 Nm ± 0.1 5.31 lb.in ± 0.885

The connecting capacity data for one Rigid: Solid/Stranded, or one Flexible conductor (when applicable) is a mandatory information required by IEC, UL and CSA standards (Copper conductors). All other data are provided as supplementary information only. For more details, please consult our CB, UL or CSA certificates and technical datasheet available on http://www.TE.com

CE, CB, RoHS, USR CNR, CSA, EAC Ex, ATEX, IECEx, BR-Ex e II, Haz Loc, BV, DNV, Rina

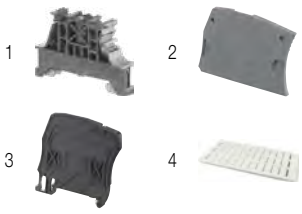

Accessories

	Description			Color	Type	Part Number		Pkg qty	Weight (1 pce) g
1	**End stops**	10 mm	0.394 in	Dark grey	BAM4	1SNK900001R0000		50	14.00
2	**End sections**	2.2 mm	0.087 in	Dark grey	ES4	1SNK505910R0000		20	2.20
3	**Circuit separators**	3 mm	0.118 in	Dark grey	CS-R1	1SNK900103R0000		20	5.20
4	**Terminal block markers**	Blank marker		White	MG-CPM 13 41790	1SNB041790R0512		1960	0.23
		Blank card			MC512	1SNK140000R0000		22	9.00
					MC512PA	1SNK149999R0000		20	10.00
		Universal wire markers holder		Grey	UMH	1SNK900611R0000		10	0.20

Complete list of accessories is indicated in the terminal block datasheet including end stops.
Some accessories such as jumper bars may modify the terminal block's ratings: Complete information available in the accessories section of the catalog.

1SNK161002S0201

Technical data valid for copper conductors only.

ZS6-PE screw clamp terminal blocks
Ground - 6 mm 0.236 in spacing

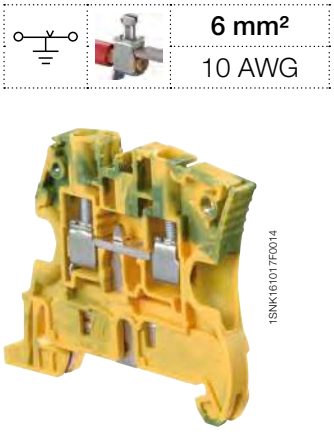

ZS6-PE

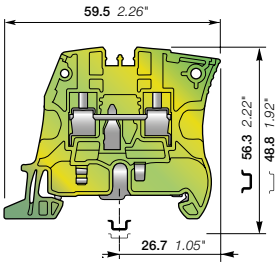

6 mm 0.236 in spacing

		6 mm²
		10 AWG

Description

Improve the safety of your installation in the event of a short-circuit thanks to our screwless rail contact:
- Rail contact non operator dependent,
- Performances above the requirements of IEC 60947-7-2 terminal block standard,
- Secured snap on or remove from the rail.

Ordering details

Description		Color	Type	Part Number		Pkg qty	Weight (1 pce) g
Ground	Screwless rail connection	Green-yellow	ZS6-PE	1SNK506150R0000		20	13.70

Main technical data

Connecting capacity		IEC	UL - CSA
1 conductor per clamp	Rigid: Solid/Stranded	0.2 ... 6 mm²	24 ... 10 AWG
	Flexible without ferrule	0.2 ... 6 mm²	
	Flexible with non insulated ferrule	0.22 ... 4 mm²	24 ... 12 AWG
	Flexible with insulated ferrule	0.22 ... 4 mm²	24 ... 12 AWG
	Gauge	A4-B3	
Rated cross section		6 mm²	10 AWG
Rated short-time withstand current (1s)		720 A	636 A
Protection		IP20	NEMA 1
Explosive atmosphere classification		IM2 II 2 GD Ex eb I/II/IIIC – Class I, Zone 1, AEx e II, Ex e II U	

The connecting capacity data for one Rigid: Solid/Stranded, or one Flexible conductor (when applicable) is a mandatory information required by IEC, UL and CSA standards (Copper conductors). All other data are provided as supplementary information only. For more details, please consult our CB, UL or CSA certificates and technical datasheet available on http://www.TE.com

Mounting instructions

Rail	TH 35-7.5, TH 35-15
Wire stripping length	10.5 mm 0.412 in
Tool	Flat screwdriver Ø 4 mm Ø 0.157 in
Torque	0.85 Nm ± 0.15 7.52 lb.in ± 1.33

CE, CB, RoHS, USR CNR, CSA, EAC Ex, ATEX, IECEx, BR-Ex e II, Haz Loc, BV, DNV, Rina

Accessories

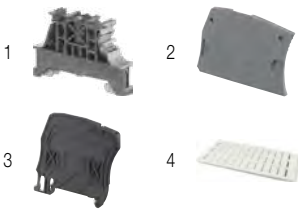

	Description			Color	Type	Part Number		Pkg qty	Weight (1 pce) g
1	**End stops**	10 mm	0.394 in	Dark grey	BAM4	1SNK900001R0000		50	14.00
2	**End sections**	2.2 mm	0.087 in	Dark grey	ES4	1SNK505910R0000		20	2.20
3	**Circuit separators**	3 mm	0.118 in	Dark grey	CS-R1	1SNK900103R0000		20	5.20
4	**Terminal block markers**	Blank marker		White	MG-CPM 13 41791	1SNB041791R0612		1680	0.27
		Blank card			MC612	1SNK150000R0000		22	10.00
					MC612PA	1SNK159999R0000		20	11.00
		Universal wire markers holder		Grey	UMH	1SNK900611R0000		10	0.20

Complete list of accessories is indicated in the terminal block datasheet including end stops.
Some accessories such as jumper bars may modify the terminal block's ratings: Complete information available in the accessories section of the catalog.

1SNK161015S0201

Technical data valid for copper conductors only.

ZS6-3S-PE screw clamp terminal blocks

Ground with 3 connections - 6 mm 0.236 in spacing

6 mm²	
10 AWG	

1SNK161090V0014

ZS6-3S-PE

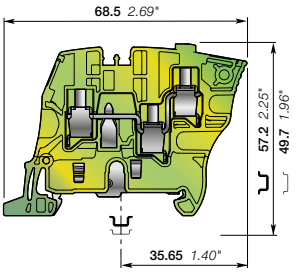

6 mm 0.236 in spacing

Description

Improve the safety of your installation in the event of a short-circuit thanks to our screwless rail contact:
- rail contact non operator dependent, secured snap on or off the rail,
- Same profile as ZS6-3S for aligned marking and identical end section.

Ordering details

Description		Color	Type	Part Number		Pkg qty	Weight (1 pce) g
Ground	Screwless rail connection	Green-yellow	ZS6-3S-PE	1SNK506151R0000		25	16.20

Main technical data

Connecting capacity		IEC	UL - CSA
1 conductor per clamp	Rigid: Solid/Stranded	0.2 ... 6 mm²	24 ... 10 AWG
	Flexible without ferrule	0.22... 6 mm²	
	Flexible with non insulated ferrule	0.22 ... 4 mm²	24 ... 12 AWG
	Flexible with insulated ferrule	0.22 ... 4 mm²	24 ... 12 AWG
	Gauge	A4-B3	
Rated cross section		4 mm²	10 AWG
Maximum cross section		6 mm²	
Rated short-time withstand current (1s)		480 A	636 A
Maximum short-time withstand current (1s)		480 A	
Protection		IP20	NEMA 1
Explosive atmosphere classification		IM2 II 2 GD Ex eb I/II/IIIC – Class I, Zone 1, AEx e II	

The connecting capacity data for one Rigid: Solid/Stranded, or one Flexible conductor (when applicable) is a mandatory information required by IEC, UL and CSA standards (Copper conductors). All other data are provided as supplementary information only. For more details, please consult our CB, UL or CSA certificates and technical datasheet available on http://www.TE.com

CE, CB, RoHS, USR, CSA, EAC Ex, ATEX, IECEx, BR-Ex e II, Haz Loc, BV, DNV

Mounting instructions

Rail		TH 35-7.5, TH 35-15
Wire stripping length		10.5 mm 0.413 in
Tool		Flat screwdriver Ø 4 mm Ø 0.157 in
Torque		0.75 Nm ± 0.05 6.64 lb.in ± 0.443

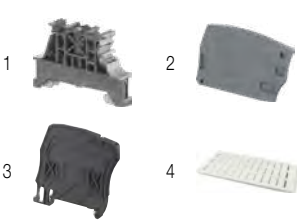

Accessories

	Description			Color	Type	Part Number		Pkg qty	Weight (1 pce) g
1	**End stops**	10 mm	0.394 in	Dark grey	BAM4	1SNK900001R0000		50	14.00
2	**End sections**	2.2 mm	0.087 in	Dark grey	ES6-3S	1SNK505912R0000		20	2.50
3	**Circuit separators**	3 mm	0.118 in	Dark grey	CS-R1	1SNK900103R0000		20	5.20
4	**Terminal block markers**	Blank marker		White	MG-CPM 13 41791	1SNB041791R0612		1680	0.27
		Blank card			MC612	1SNK150000R0000		22	10.00
					MC612PA	1SNK159999R0000		20	11.00
		Universal wire markers holder		Grey	UMH	1SNK900611R0000		10	0.20

Complete list of accessories is indicated in the terminal block datasheet including end stops.
Some accessories such as jumper bars may modify the terminal block's ratings: Complete information available in the accessories section of the catalog.

1SNK161080S0201

Technical data valid for copper conductors only.

ZS6-4S-PE screw clamp terminal blocks

Ground with 4 connections - 6 mm 0.236 in spacing

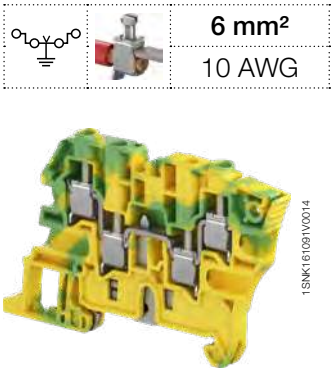

6 mm²	
10 AWG	

1SNK161091V0014

ZS6-4S-PE

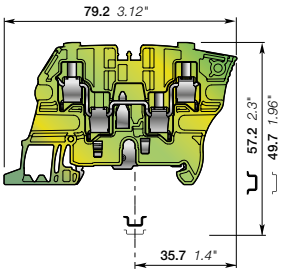

6 mm 0.236 in spacing

Description

Improve the safety of your installation in the event of a short-circuit thanks to our screwless rail contact:
- rail contact non operator dependent, secured snap on or off the rail,
- Same profile as ZS6-4S for aligned marking and identical end section.

Ordering details

Description		Color	Type	Part Number		Pkg qty	Weight (1 pce) g
Ground	Screwless rail connection	Green-yellow	ZS6-4S-PE	1SNK506152R0000		25	19.40

Main technical data

Connecting capacity		IEC	UL - CSA
1 conductor per clamp	Rigid: Solid/Stranded	0.2 ... 6 mm²	24 ... 10 AWG
	Flexible without ferrule	0.22... 6 mm²	
	Flexible with non insulated ferrule	0.22 ... 4 mm²	24 ... 12 AWG
	Flexible with insulated ferrule	0.22 ... 4 mm²	24 ... 12 AWG
	Gauge	A4-B3	
Rated cross section		4 mm²	10 AWG
Maximum cross section		6 mm²	
Rated short-time withstand current (1s)		480 A	636 A
Maximum short-time withstand current (1s)		480 A	
Protection		IP20	NEMA 1
Explosive atmosphere classification		IM2 II 2 GD Ex eb I/II/IIIC – Class I, Zone 1, AEx e II	

Mounting instructions

Rail	TH 35-7.5, TH 35-15
Wire stripping length	10.5 mm 0.413 in
Tool	Flat screwdriver Ø 4 mm Ø 0.157 in
Torque	0.75 Nm ± 0.05 6.64 lb.in ± 0.443

The connecting capacity data for one Rigid: Solid/Stranded, or one Flexible conductor (when applicable) is a mandatory information required by IEC, UL and CSA standards (Copper conductors). All other data are provided as supplementary information only. For more details, please consult our CB, UL or CSA certificates and technical datasheet available on http://www.TE.com

CE, CB, RoHS, USR, CSA, EAC Ex, ATEX, IECEx, BR-Ex e II, Haz Loc, BV, DNV

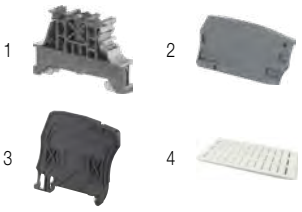

Accessories

	Description			Color	Type	Part Number		Pkg qty	Weight (1 pce) g
1	**End stops**	10 mm	0.394 in	Dark grey	BAM4	1SNK900001R0000		50	14.00
2	**End sections**	2.2 mm	0.087 in	Dark grey	ES6-4S	1SNK505911R0000		20	3.10
3	**Circuit separators**	3 mm	0.118 in	Dark grey	CS-R1	1SNK900103R0000		20	5.20
4	**Terminal block markers**	Blank marker		White	MG-CPM 13 41791	1SNB041791R0612		1680	0.27
		Blank card			MC612	1SNK150000R0000		22	10.00
					MC612PA	1SNK159999R0000		20	11.00
		Universal wire markers holder		Grey	UMH	1SNK900611R0000		10	0.20

Complete list of accessories is indicated in the terminal block datasheet including end stops.
Some accessories such as jumper bars may modify the terminal block's ratings: Complete information available in the accessories section of the catalog.

1SNK161081S0201

Technical data valid for copper conductors only.

ZS10-PE screw clamp terminal blocks
Ground - 8 mm 0.315 in spacing

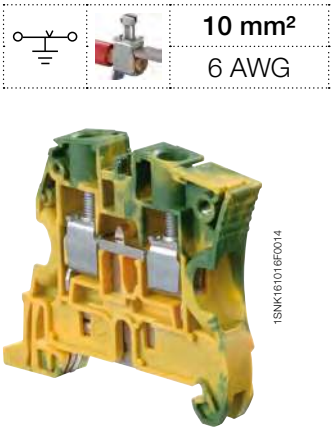

ZS10-PE

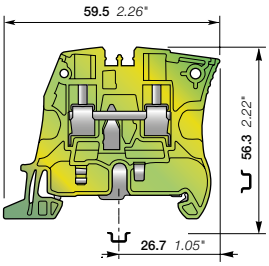

8 mm 0.315 in spacing

	10 mm²
	6 AWG

Description

Improve the safety of your installation in the event of a short-circuit thanks to our screwless rail contact:
- Rail contact non operator dependent,
- Performances above the requirements of IEC 60947-7-2 terminal block standard,
- Secured snap on or remove from the rail.

Ordering details

Description		Color	Type	Part Number		Pkg qty	Weight (1 pce) g
Ground	Screwless rail connection	Green-yellow	ZS10-PE	1SNK508150R0000		20	22.50

Main technical data

Connecting capacity		IEC	UL - CSA
1 conductor per clamp	Rigid: Solid/Stranded	0.5 ... 10 mm²	24 ... 6 AWG
	Flexible without ferrule	0.5 ... 10 mm²	
	Flexible with non insulated ferrule	0.5 ... 10 mm²	24 ... 8 AWG
	Flexible with insulated ferrule	0.5 ... 6 mm²	24 ... 8 AWG
	Gauge	A5-B5	
Rated cross section		10 mm²	6 AWG
Rated short-time withstand current (1s)		1200 A	1596 A
Protection		IP20	NEMA 1
Explosive atmosphere classification		IM2 II 2 GD Ex eb I/II/IIIC – Class I, Zone 1, AEx e II, Ex e II U	

The connecting capacity data for one Rigid: Solid/Stranded, or one Flexible conductor (when applicable) is a mandatory information required by IEC, UL and CSA standards (Copper conductors). All other data are provided as supplementary information only. For more details, please consult our CB, UL or CSA certificates and technical datasheet available on http://www.TE.com

CE, CB, RoHS, USR CNR, CSA, EAC Ex, ATEX, IECEx, BR-Ex e II, Haz Loc, BV, DNV, Rina

Mounting instructions

Rail	TH 35-7.5, TH 35-15
Wire stripping length	12 mm 0.472 in
Tool	Flat screwdriver Ø 4 mm Ø 0.157 in
Torque	1.3 Nm ± 0.3 11.5 lb.in ± 2.65

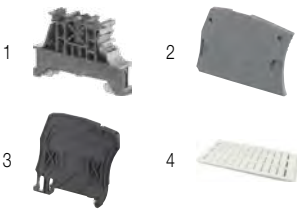

Accessories

	Description			Color	Type	Part Number		Pkg qty	Weight (1 pce) g
1	**End stops**	10 mm	0.394 in	Dark grey	BAM4	1SNK900001R0000		50	14.00
2	**End sections**	2.2 mm	0.087 in	Dark grey	ES4	1SNK505910R0000		20	2.20
3	**Circuit separators**	3 mm	0.118 in	Dark grey	CS-R1	1SNK900103R0000		20	5.20
4	**Terminal block markers**	Blank marker		White	MG-CPM 13 41791	1SNB041791R0612		1680	0.27
		Blank card			MC812	1SNK160000R0000		22	10.00
					MC812PA	1SNK169999R0000		20	14.00
		Universal wire markers holder		Grey	UMH	1SNK900611R0000		10	0.20

Complete list of accessories is indicated in the terminal block datasheet including end stops.
Some accessories such as jumper bars may modify the terminal block's ratings: Complete information available in the accessories section of the catalog.

1SNK161016S0201

Technical data valid for copper conductors only.

ZS16-PE screw clamp terminal blocks
Ground - 10 mm 0.394 in spacing

16 mm²
4 AWG

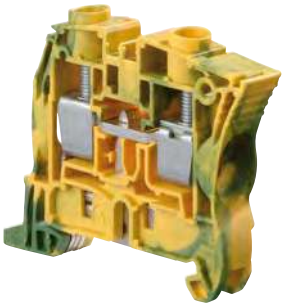

1SNK161019F0014

ZS16-PE

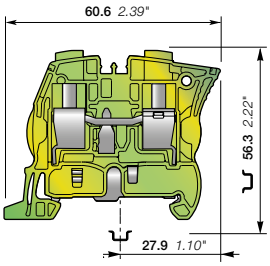

10 mm 0.394 in spacing

Description

Improve the safety of your installation in the event of a short-circuit thanks to our screwless rail contact:
- Rail contact non operator dependent,
- Performances above the requirements of IEC 60947-7-2 terminal block standard,
- Secured snap on or remove from the rail,
- PE.N function available by combining ZS16-PE with ZS16-BL and 2 poles jumper bar JB10-2.

Ordering details

Description		Color	Type	Part Number		Pkg qty	Weight (1 pce) g
Ground	Screwless rail connection	Green-yellow	ZS16-PE	1SNK510150R0000		20	32.00

Main technical data

Connecting capacity		IEC	UL - CSA
1 conductor per clamp	Rigid: Solid/Stranded	0.5 ... 16 mm²	24 ... 4 AWG
	Flexible without ferrule	0.5 ... 16 mm²	
	Flexible with non insulated ferrule	0.5 ... 16 mm²	24 ... 4 AWG
	Flexible with insulated ferrule	0.5 ... 10 mm²	24 ... 8 AWG
	Gauge	A6-B6	
Rated cross section		16 mm²	4 AWG
Rated short-time withstand current (1s)		1920 A	2544 A
Protection		IP20	NEMA 1
Explosive atmosphere classification		IM2 II 2 GD Ex eb I/II/IIIC – Class I, Zone 1, AEx e II, Ex e II U	

Mounting instructions

Rail	TH 35-7.5, TH 35-15
Wire stripping length	13.5 mm 0.531 in
Tool	Flat screwdriver Ø 5.5 mm Ø 0.217 in
Torque	1.8 Nm ± 0.2 15.9 lb.in ± 1.77

The connecting capacity data for one Rigid: Solid/Stranded, or one Flexible conductor (when applicable) is a mandatory information required by IEC, UL and CSA standards (Copper conductors). All other data are provided as supplementary information only. For more details, please consult our CB, UL or CSA certificates and technical datasheet available on http://www.TE.com

CE, CB, RoHS, USR CNR, CSA, EAC Ex, ATEX, IECEx, BR-Ex e II, Haz Loc, BV, DNV, Rina

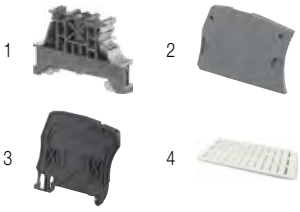

Accessories

	Description			Color	Type	Part Number		Pkg qty	Weight (1 pce) g
1	**End stops**	10 mm	0.394 in	Dark grey	BAM4	1SNK900001R0000		50	14.00
2	**End sections**	2.2 mm	0.087 in	Dark grey	ES4	1SNK505910R0000		20	2.20
3	**Circuit separators**	3 mm	0.118 in	Dark grey	CS-R1	1SNK900103R0000		20	5.20
4	**Terminal block markers**	Blank marker		White	MG-CPM 13 41791	1SNB041791R0612		1680	0.27
		Blank card			MC812	1SNK160000R0000		22	10.00
					MC812PA	1SNK169999R0000		20	14.00
		Universal wire markers holder		Grey	UMH	1SNK900611R0000		10	0.20

Complete list of accessories is indicated in the terminal block datasheet including end stops.
Some accessories such as jumper bars may modify the terminal block's ratings: Complete information available in the accessories section of the catalog.

1SNK161018S0201

Technical data valid for copper conductors only.

ZS25-PE screw clamp terminal blocks
Ground - 12 mm 0.472 in spacing

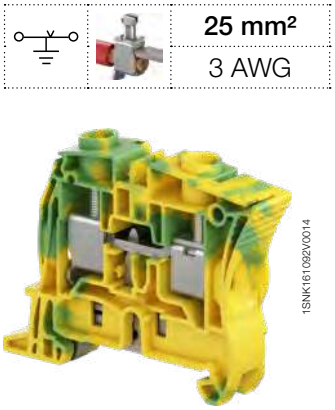

25 mm²	
3 AWG	

ZS25-PE

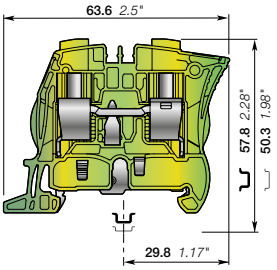

12 mm 0.472 in spacing

Description

Improve the safety of your installation in the event of a short-circuit thanks to our screwless rail contact:
- rail contact non operator dependent, secured snap on or off the rail,
- Same profile as ZS25 for aligned marking and identical end section.

Ordering details

Description		Color	Type	Part Number		Pkg qty	Weight (1 pce) g
Ground	Screwless rail connection	Green-yellow	ZS25-PE	1SNK512150R0000		20	38.00

Main technical data

Connecting capacity		IEC	UL - CSA
1 conductor per clamp	Rigid: Solid/Stranded	0.5 ... 25 mm²	24 ... 3 AWG
	Flexible without ferrule	0.5 ... 25 mm²	
	Flexible with non insulated ferrule	0.5 ... 16 mm²	24 ... 4 AWG
	Flexible with insulated ferrule	0.5 ... 16 mm²	24 ... 8 AWG
	Gauge	A6-B6	
Rated cross section		16 mm²	3 AWG
Maximum cross section		25 mm²	
Rated short-time withstand current (1s)		1920 A	3204 A
Maximum short-time withstand current (1s)		3000 A	
Protection		IP20	NEMA 1
Explosive atmosphere classification		IM2 II 2 GD Ex eb I/II/IIIC – Class I, Zone 1, AEx e II, Ex e II U	

Mounting instructions

Rail	TH 35-7.5, TH 35-15
Wire stripping length	13.5 mm 0.531 in
Tool	Flat screwdriver Ø 5.5 mm Ø 0.217 in
Torque	1.8 Nm ± 0.2 15.9 lb.in ± 1.77

The connecting capacity data for one Rigid: Solid/Stranded, or one Flexible conductor (when applicable) is a mandatory information required by IEC, UL and CSA standards (Copper conductors). All other data are provided as supplementary information only. For more details, please consult our CB, UL or CSA certificates and technical datasheet available on http://www.TE.com

CE, CB, RoHS, USR CNR, CSA, EAC Ex, ATEX, IECEx, BR-Ex e II, Haz Loc, BV, DNV

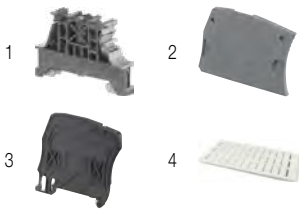

Accessories

	Description			Color	Type	Part Number		Pkg qty	Weight (1 pce) g
1	**End stops**	10 mm	0.394 in	Dark grey	BAM4	1SNK900001R0000		50	14.00
2	**End sections**	2.2 mm	0.087 in	Dark grey	ES4	1SNK505910R0000		20	2.20
3	**Circuit separators**	3 mm	0.118 in	Dark grey	CS-R1	1SNK900103R0000		20	5.20
4	**Terminal block markers**	Blank marker		White	MG-CPM 13 41791	1SNB041791R0612		1680	0.27
		Blank card			MC812	1SNK160000R0000		22	10.00
					MC812PA	1SNK169999R0000		20	14.00
		Universal wire markers holder		Grey	UMH	1SNK900611R0000		10	0.20

Complete list of accessories is indicated in the terminal block datasheet including end stops.
Some accessories such as jumper bars may modify the terminal block's ratings: Complete information available in the accessories section of the catalog.

1SNK161082S0201

Technical data valid for copper conductors only.

ZS35-PE screw clamp terminal blocks
Ground - 16 mm 0.630 in spacing

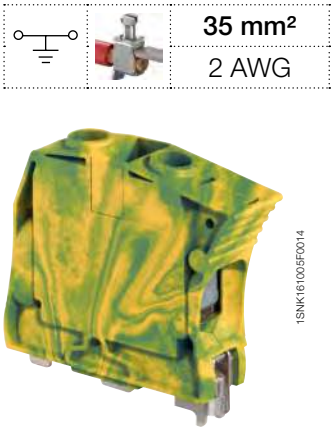

35 mm²	
2 AWG	

Description

Reliable electrical and mechanical contact with the rail that exceeds the requirements of IEC 60947-7-2 terminal block standard.

1SNK161005F0014

ZS35-PE

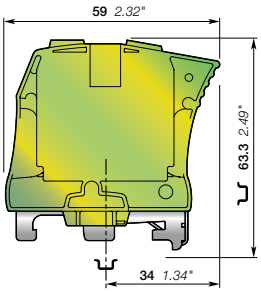

16 mm 0.630 in spacing

Ordering details

Description		Color	Type	Part Number		Pkg qty	Weight (1 pce) g
Ground	Screw rail connection	Green-yellow	ZS35-PE	1SNK516150R0000		20	81.80

Main technical data

Connecting capacity		IEC	UL - CSA
1 conductor per clamp	Rigid: Solid/Stranded	6 ... 35 mm²	10 ... 2 AWG
	Flexible without ferrule	6 ... 35 mm²	
	Flexible with non insulated ferrule	4 ... 35 mm²	10 ... 2 AWG
	Flexible with insulated ferrule	4 ... 35 mm²	10 ... 2 AWG
	Gauge	A9	
Rated cross section		35 mm²	2 AWG
Rated short-time withstand current (1s)		4200 A	4032 A
Protection		IP10	NEMA 1
Explosive atmosphere classification		IM2 II 2 GD Ex eb I/II/IIIC – Class I, Zone 1, AEx e II	

Mounting instructions

Rail		TH 35-7.5, TH 35-15
Wire stripping length		17 mm 0.669 in
Tool Screw clamp		Flat screwdriver Ø 6.5 mm Ø 0.256 in
Rail connection screw		Ø 5.5 Ø 0.217
Torque Screw clamp		2.65 Nm ± 0.15 23.4 lb.in ± 1.33
Rail connection screw		1.6 Nm ± 0.15 Nm 14.2 lb.in ± 1.33 lb.in

The connecting capacity data for one Rigid: Solid/Stranded, or one Flexible conductor (when applicable) is a mandatory information required by IEC, UL and CSA standards (Copper conductors). All other data are provided as supplementary information only. For more details, please consult our CB, UL or CSA certificates and technical datasheet available on http://www.TE.com

CE, CB, RoHS, USR, CSA, EAC Ex, ATEX, IECEx, BR-Ex e II, Haz Loc, BV, DNV, Rina

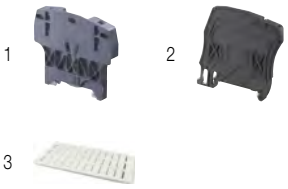

1 2 3

Accessories

	Description			Color	Type	Part Number		Pkg qty	Weight (1 pce) g
1	**End stops**	10 mm	0.394 in	Dark grey	BAZH1	1SNK900102R0000		20	24.00
2	**Circuit separators**	3 mm	0.118 in	Dark grey	CS-R1	1SNK900103R0000		20	5.20
3	**Terminal block markers**	Blank marker		White	MG-CPM 13 41791	1SNB041791R0612		1680	0.27
		Blank card			MC812	1SNK160000R0000		22	10.00
					MC812PA	1SNK169999R0000		20	14.00
		Universal wire markers holder		Grey	UMH	1SNK900611R0000		10	0.20

Complete list of accessories is indicated in the terminal block datasheet including end stops.
Some accessories such as jumper bars may modify the terminal block's ratings: Complete information available in the accessories section of the catalog.

1SNK161020S0201

Technical data valid for copper conductors only.

ZS35-PEN screw clamp terminal blocks

Ground + neutral - 32 mm 1.260 in spacing

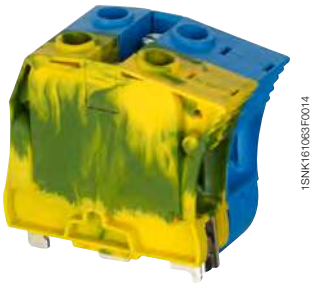

ZS35-PEN

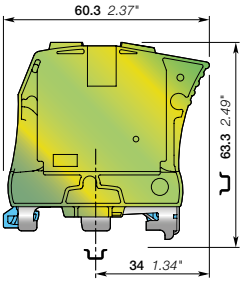

32 mm 1.260 in spacing

Description

Simplify your PE.N connection with ZS35-PE block connected to ZS35-BL through a pre-mounted jumper.

Ordering details

Description	Color	Type	Part Number		Pkg qty	Weight (1 pce) g
Ground + neutral	Green-yellow	ZS35-PEN	1SNK516170R0000		10	236.00

Main technical data

Connecting capacity		IEC	UL - CSA
1 conductor per clamp	Rigid: Solid/Stranded	6 ... 35 mm²	
	Flexible without ferrule	6 ... 35 mm²	
	Flexible with non insulated ferrule	6 ... 35 mm²	10 ... 2 AWG
	Flexible with insulated ferrule	6 ... 35 mm²	
	Gauge	A9	
Rated cross section		35 mm²	
Rated short-time withstand current (1s)		4200 A	
Protection		IP10	NEMA 1

Mounting instructions

Rail	TH 35-7.5, TH 35-15
Wire stripping length	17 mm 0.669 in
Tool Screw clamp	Flat screwdriver Ø 6.5 mm Ø 0.256 in
Rail connection screw	Ø 5.5 Ø 0.217
Torque Screw clamp	2.65 Nm ± 0.15 23.5 lb.in ± 1.33
Rail connection screw	1.6 Nm ± 0.15 Nm 14.2 lb.in ± 1.33 lb.in

The connecting capacity data for one Rigid: Solid/Stranded, or one Flexible conductor (when applicable) is a mandatory information required by IEC, UL and CSA standards (Copper conductors). All other data are provided as supplementary information only. For more details, please consult our CB, UL or CSA certificates and technical datasheet available on http://www.TE.com

CE RoHS EAC

Accessories

	Description			Color	Type	Part Number		Pkg qty	Weight (1 pce) g
1	End stops	10 mm	0.394 in	Dark grey	BAZH1	1SNK900102R0000		20	24.00
2	Terminal block markers	Blank marker		White	MG-CPM 13 41791	1SNB041791R0612		1680	0.27
		Blank card			MC812	1SNK160000R0000		22	10.00
					MC812PA	1SNK169999R0000		20	14.00
		Universal wire markers holder		Grey	UMH	1SNK900611R0000		10	0.20

Complete list of accessories is indicated in the terminal block datasheet including end stops.
Some accessories such as jumper bars may modify the terminal block's ratings: Complete information available in the accessories section of the catalog.

1SNK161047S0201

Technical data valid for copper conductors only.

ZS50-PE screw clamp terminal blocks

Ground - 16 mm 0.630 in spacing

50 mm²
0 AWG

Description

– Reliable electrical and mechanical contact with the rail that exceeds the requirements of the IEC 60947-7-2 terminal block standard.

1SNK161093V0014

ZS50-PE

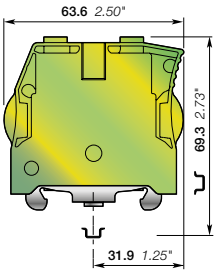

16 mm 0.630 in spacing

Ordering details

Description		Color	Type	Part Number		Pkg qty	Weight (1 pce) g
Ground	Screw rail connection	Green-yellow	ZS50-PE	1SNK516151R0000		20	83.00

Main technical data

Connecting capacity		IEC	UL - CSA
1 conductor per clamp	Rigid: Solid/Stranded	1 … 50 mm²	18 … 0 AWG
	Flexible without ferrule	1 … 50 mm²	
	Flexible with non insulated ferrule	1 … 50 mm²	18 … 0 AWG
	Flexible with insulated ferrule	1 … 50 mm²	18 … 0 AWG
	Gauge	Dia.11	
Rated cross section		50 mm²	0 AWG
Rated short-time withstand current (1s)		6000 A	6420 A
Protection		IP10	NEMA 1
Explosive atmosphere classification		IM2 II 2 GD Ex eb I/II/IIIC – Class I, Zone 1, AEx e II	

Mounting instructions

Rail		TH 35-7.5, TH 35-15
Wire stripping length		17 mm 0.669 in
Tool Screw clamp		Flat screwdriver Ø 6.5 mm Ø 0.256 in
Rail connection screw		Ø 6.5 Ø 0.256
Torque Screw clamp		3 Nm ± 0.50 26.6 lb.in ± 4.43
Rail connection screw		3 Nm ± 0.25 Nm 26.553 lb.in ± 2.21 lb.in

The connecting capacity data for one Rigid: Solid/Stranded, or one Flexible conductor (when applicable) is a mandatory information required by IEC, UL and CSA standards (Copper conductors). All other data are provided as supplementary information only. For more details, please consult our CB, UL or CSA certificates and technical datasheet available on http://www.TE.com

CE, CB, RoHS, USR, CSA, EAC Ex, ATEX, IECEx, BR-Ex e II, Haz Loc, BV, DNV

1 2

Accessories

	Description			Color	Type	Part Number		Pkg qty	Weight (1 pce) g
1	**End stops**	10 mm	0.394 in	Dark grey	BAZH1	1SNK900102R0000		20	24.00
2	**Terminal block markers**	Blank marker		White	MG-CPM 13 41791	1SNB041791R0612		1680	0.27
		Blank card			MC812	1SNK160000R0000		22	10.00
					MC812PA	1SNK169999R0000		20	14.00
		Universal wire markers holder		Grey	UMH	1SNK900611R0000		10	0.20

Complete list of accessories is indicated in the terminal block datasheet including end stops.
Some accessories such as jumper bars may modify the terminal block's ratings: Complete information available in the accessories section of the catalog.

1SNK161070S0201

Technical data valid for copper conductors only.

ZS70-PE screw clamp terminal blocks
Ground - 22 mm 0.866 in spacing

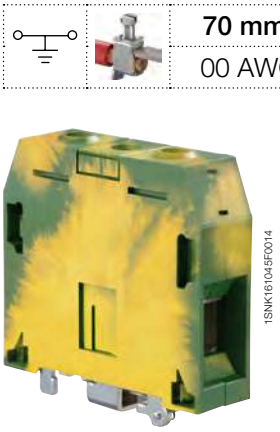

ZS70-PE

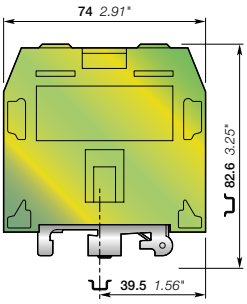

22 mm 0.866 in spacing

	70 mm²
	00 AWG

Description

Reliable electrical and mechanical contact with the rail that exceeds the requirements of IEC 60947-7-2 terminal block standard.

Ordering details

Description		Color	Type	Part Number		Pkg qty	Weight (1 pce) g
Ground	Screw rail connection	Green-yellow	ZS70-PE	1SNK522150R0000		10	222.00

Main technical data

Connecting capacity		IEC	UL - CSA
1 conductor per clamp	Rigid: Solid/Stranded	16 ... 95 mm²	4 ... 00 AWG
	Flexible without ferrule	16 ... 70 mm²	
	Flexible with non insulated ferrule	16 ... 50 mm²	
	Flexible with insulated ferrule	16 ... 50 mm²	
	Gauge	B11	
Rated cross section		70 mm²	00 AWG
Rated short-time withstand current (1s)		8400 A	8088 A
Protection		IP10	NEMA 1
Explosive atmosphere classification		IM2 II 2 GD Ex eb I/II/IIIC – Class I, Zone 1, AEx e II, Ex e II U	

The connecting capacity data for one Rigid: Solid/Stranded, or one Flexible conductor (when applicable) is a mandatory information required by IEC, UL and CSA standards (Copper conductors). All other data are provided as supplementary information only. For more details, please consult our CB, UL or CSA certificates and technical datasheet available on http://www.TE.com

CE, CB, RoHS, USR CNR, CSA, EAC Ex, ATEX, IECEx, BR-Ex e II, Haz Loc, BV, DNV, Rina

Mounting instructions

Rail		TH 35-15
Wire stripping length		25 mm 0.984 in
Tool Screw clamp		Allen key Ø 6 mm Ø 0.236 in
Rail connection screw		Ø 4 Ø 0.158
Torque Screw clamp		6.5 Nm ± 0.5 57.5 lb.in ± 4.43
Rail connection screw		1.9 Nm ± 0.1 Nm 16.82 lb.in ± 0.885 lb.in

1

2

Accessories

	Description			Color	Type	Part Number		Pkg qty	Weight (1 pce) g
1	**End stops**	10 mm	0.394 in	Dark grey	BAZH1	1SNK900102R0000		20	24.00
2	**Terminal block markers**	Blank marker		White	MG-CPM 13 41791	1SNB041791R0612		1680	0.27
		Blank card			MC812	1SNK160000R0000		22	10.00
					MC812PA	1SNK169999R0000		20	14.00
		Universal wire markers holder		Grey	UMH	1SNK900611R0000		10	0.20

Complete list of accessories is indicated in the terminal block datasheet including end stops.
Some accessories such as jumper bars may modify the terminal block's ratings: Complete information available in the accessories section of the catalog.

1SNK161022S0201

Technical data valid for copper conductors only.

ZS95-PE screw clamp terminal blocks
Ground - 26 mm 1.024 in spacing

95 mm²
0000 AWG

Description

Reliable electrical and mechanical contact with the rail that exceeds the requirements of IEC 60947-7-2 terminal block standard.

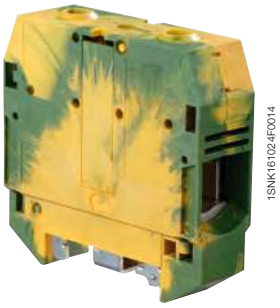

ZS95-PE

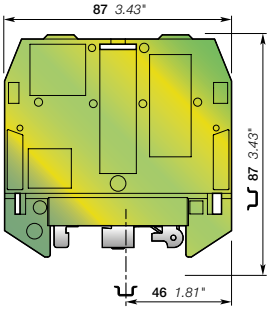

26 mm 1.024 in spacing

Ordering details

Description		Color	Type	Part Number		Pkg qty	Weight (1 pce) g
Ground	Screw rail connection	Green-yellow	ZS95-PE	1SNK526150R0000		10	278.00

Main technical data

Connecting capacity		IEC	UL - CSA
1 conductor per clamp	Rigid: Solid/Stranded	35 ... 120 mm²	2 ... 0000 AWG
	Flexible without ferrule	35 ... 95 mm²	
	Flexible with non insulated ferrule	35 ... 50 mm²	
	Flexible with insulated ferrule	35 ... 50 mm²	
	Gauge	B12	
Rated cross section		95 mm²	0000 AWG
Rated short-time withstand current (1s)		11400 A	12840 A
Protection		IP10	NEMA 1
Explosive atmosphere classification		IM2 II 2 GD Ex eb I/II/IIIC – Class I, Zone 1, AEx e II, Ex e II U	

Mounting instructions

Rail	TH 35-15
Wire stripping length	26 mm 1.024 in
Tool Screw clamp	Allen key Ø 6 mm Ø 0.236 in
Rail connection screw	Ø 4 Ø 0.158
Torque Screw clamp	9.25 Nm ± 0.25 81.7 lb.in ± 2.2
Rail connection screw	1.9 Nm ± 0.1 Nm 16.82 lb.in ± 0.885 lb.in

The connecting capacity data for one Rigid: Solid/Stranded, or one Flexible conductor (when applicable) is a mandatory information required by IEC, UL and CSA standards (Copper conductors). All other data are provided as supplementary information only. For more details, please consult our CB, UL or CSA certificates and technical datasheet available on http://www.TE.com

CE, CB, RoHS, USR CNR, CSA, EAC Ex, ATEX, IECEx, BR-Ex e II, Haz Loc, BV, DNV, Rina

Accessories

	Description			Color	Type	Part Number		Pkg qty	Weight (1 pce) g
1	**End stops**	10 mm	0.394 in	Dark grey	BAZH1	1SNK900102R0000		20	24.00
2	**Terminal block markers**	Blank marker		White	MG-CPM 13 41791	1SNB041791R0612		1680	0.27
		Blank card			MC812	1SNK160000R0000		22	10.00
					MC812PA	1SNK169999R0000		20	14.00
		Universal wire markers holder		Grey	UMH	1SNK900611R0000		10	0.20

Complete list of accessories is indicated in the terminal block datasheet including end stops.
Some accessories such as jumper bars may modify the terminal block's ratings: Complete information available in the accessories section of the catalog.

1SNK161024S0201

Technical data valid for copper conductors only.

ZS4-S screw clamp terminal blocks

Disconnect with blade - 5.2 mm 0.205 in spacing

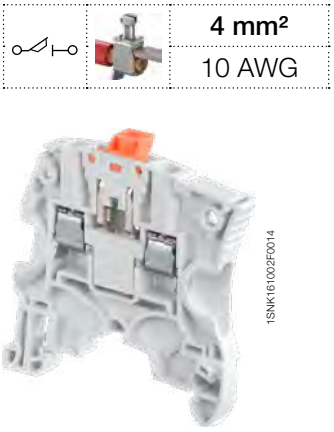

4 mm²	
10 AWG	

ZS4-S

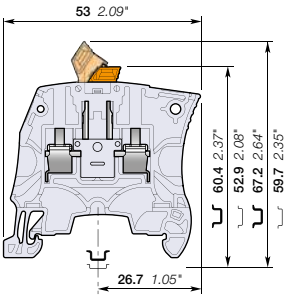

5.2 mm 0.205 in spacing

Description

- Ease your disconnect operations with the disconnect blade operated by hand or with a screwdriver,
- Same profile as ZS4 feed-through terminal block for aligned marking and identical end section use.

Ordering details

Description		Color	Type	Part Number		Pkg qty	Weight (1 pce) g
Disconnect	Profile aligned with ZS4	Grey	ZS4-S	1SNK505310R0000		50	8.60
		Blue	ZS4-S-BL	1SNK505320R0000		50	8.60
		Orange	ZS4-S-OR	1SNK505330R0000		50	8.60

Main technical data

Connecting capacity		IEC	UL - CSA
1 conductor per clamp	Rigid: Solid/Stranded	0.2 ... 4 mm²	24 ... 10 AWG
	Flexible without ferrule	0.2 ... 4 mm²	
	Flexible with non insulated ferrule	0.22 ... 4 mm²	24 ... 10 AWG
	Flexible with insulated ferrule	0.22 ... 2.5 mm²	24 ... 14 AWG
	Gauge	A3-B3	
2 conductors per clamp	Rigid: Solid/Stranded	0.2 ... 1.5 mm²	24 ... 16 AWG
	Flexible without ferrule	0.2 ... 1.5 mm²	
	Flexible with twin ferrule	0.22 ... 1.5 mm²	24 ... 16 AWG
Rated current / Rated cross section		25 A / 4 mm²	25 A / 10 AWG
Rated short-time withstand current (1s)		480 A	
Rated voltage		400 V	150 V
Impulse withstand voltage		6000 V	
Protection		IP20	NEMA 1

Mounting instructions

Rail	TH 35-7.5, TH 35-15
Wire stripping length	10.5 mm 0.412 in
Tool	Flat screwdriver Ø 3.5 mm Ø 0.138 in
Torque	0.6 Nm ± 0.1 5.31 lb.in ± 0.885

Recommendation for best usage: in horizontal assemblies, disconnect terminal blocks should be mounted with fixed foot on top (power side) so that the disconnect knife does not partially close through gravity. Furthermore, as specified per IEC 60947-7-1, disconnect terminal blocks are intended to be used for temporary disconnection at zero potential and at no load.

The connecting capacity data for one Rigid: Solid/Stranded, or one Flexible conductor (when applicable) is a mandatory information required by IEC, UL and CSA standards (Copper conductors). All other data are provided as supplementary information only. For more details, please consult our CB, UL or CSA certificates and technical datasheet available on http://www.TE.com

CE | CB | RoHS | USR CNR | CSA | EAC | BV | DNV | Rina

Accessories

	Description			Color	Type	Part Number		Pkg qty	Weight (1 pce) g
1	**End stops**	10 mm	0.394 in	Dark grey	BAM4	1SNK900001R0000		50	14.00
2	**End sections**	2.2 mm	0.087 in	Dark grey	ES4	1SNK505910R0000		20	2.20
3	**Lateral jumper bars**	2 poles	30 A (IEC)	Grey	PC5-2	1SNA113542R1000		10	1.80
		10 poles	30 A (IEC)		PC5-10	1SNA113544R1200		10	6.00
4	**Circuit separators**	3 mm	0.118 in	Dark grey	CS-R1	1SNK900103R0000		20	5.20
5	**Shield connectors**				SHBS	1SNK900600R0000		20	3.50
6	**Protecting covers**	5.2 mm 0.205 in spacing		Transparent	PL5	1SNK900618R0000		10	1.50
7	**Terminal block markers**	Blank marker		White	MG-CPM 13 41790	1SNB041790R0512		1960	0.23
		Blank card			MC512	1SNK140000R0000		22	9.00
					MC512PA	1SNK149999R0000		20	10.00
		Universal wire markers holder		Grey	UMH	1SNK900611R0000		10	0.20

Complete list of accessories is indicated in the terminal block datasheet including end stops.
Some accessories such as jumper bars may modify the terminal block's ratings: Complete information available in the accessories section of the catalog.

1SNK161010S0201

Technical data valid for copper conductors only.

ZS4-S-T screw clamp terminal blocks

Disconnect with blade - with test socket - 5.2 mm 0.205 in spacing

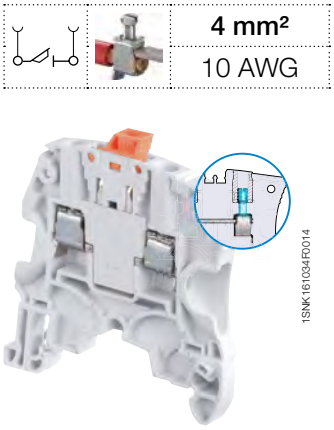

4 mm²
10 AWG

ZS4-S-T

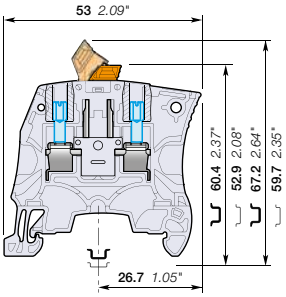

5.2 mm 0.205 in spacing

Description

- Ease your test operations with the 2 built-in test sockets,
- Screwdriver or hand operated disconnect blade,
- Same profile as ZS4 feed-through terminal block for aligned marking and identical end section use.

Ordering details

Description		Color	Type	Part Number		Pkg qty	Weight (1 pce) g
Disconnect	Profile aligned with ZS4, with 2 test sockets DIA 2 mm 0.079 in	Grey	ZS4-S-T2	1SNK505311R0000		50	8.90
		Blue	ZS4-S-T2-BL	1SNK505321R0000		50	8.90
		Orange	ZS4-S-T2-OR	1SNK505331R0000		50	8.90
	Profile aligned with ZS4, with 2 test sockets DIA 2.3 mm 0.091 in	Grey	ZS4-S-T2.3	1SNK505312R0000		50	8.80

Main technical data

Connecting capacity		IEC	UL - CSA
1 conductor per clamp	Rigid: Solid/Stranded	0.2 ... 4 mm²	24 ... 10 AWG
	Flexible without ferrule	0.22 ... 4 mm²	
	Flexible with non insulated ferrule	0.22 ... 4 mm²	24 ... 10 AWG
	Flexible with insulated ferrule	0.22 ... 2.5 mm²	24 ... 14 AWG
	Gauge	A3-B3	
2 conductors per clamp	Rigid: Solid/Stranded	0.2 ... 1.5 mm²	24 ... 16 AWG
	Flexible without ferrule	0.2 ... 1.5 mm²	
	Flexible with twin ferrule	0.22 ... 1.5 mm²	24 ... 16 AWG
Rated current / Rated cross section		25 A / 4 mm²	25 A / 10 AWG
Rated short-time withstand current (1s)		480 A	
Rated voltage		400 V	150 V
Impulse withstand voltage		6000 V	
Protection		IP20	NEMA 1

Mounting instructions

Rail		TH 35-7.5, TH 35-15
Wire stripping length		10.5 mm 0.412 in
Tool		Flat screwdriver Ø 3.5 mm Ø 0.138 in
Torque		0.6 Nm ± 0.1 5.31 lb.in ± 0.885

Recommendation for best usage: in horizontal assemblies, disconnect terminal blocks should be mounted with fixed foot on top (power side) so that the disconnect knife does not partially close through gravity. Furthermore, as specified per IEC 60947-7-1, disconnect terminal blocks are intended to be used for temporary disconnection at zero potential and at no load.

The connecting capacity data for one Rigid: Solid/Stranded, or one Flexible conductor (when applicable) is a mandatory information required by IEC, UL and CSA standards (Copper conductors). All other data are provided as supplementary information only. For more details, please consult our CB, UL or CSA certificates and technical datasheet available on http://www.TE.com

CE RoHS USR CNR CSA EAC

Accessories

	Description			Color	Type	Part Number		Pkg qty	Weight (1 pce) g
1	**End stops**	10 mm	0.394 in	Dark grey	BAM4	1SNK900001R0000		50	14.00
2	**End sections**	2.2 mm	0.087 in	Dark grey	ES4	1SNK505910R0000		20	2.20
3	**Lateral jumper bars**	2 poles	30 A (IEC)	Grey	PC5-2	1SNA113542R1000		10	1.80
		10 poles	30 A (IEC)		PC5-10	1SNA113544R1200		10	6.00
4	**Circuit separators**	3 mm	0.118 in	Dark grey	CS-R1	1SNK900103R0000		20	5.20
5	**Shield connectors**				SHBS	1SNK900600R0000		20	3.50
6	**Protecting covers**	5.2 mm 0.205 in spacing		Transparent	PL5	1SNK900618R0000		10	1.50
7	**Terminal block markers**	Blank marker		White	MG-CPM 13 41790	1SNB041790R0512		1960	0.23
		Blank card			MC512	1SNK140000R0000		22	9.00
					MC512PA	1SNK149999R0000		20	10.00
		Universal wire markers holder		Grey	UMH	1SNK900611R0000		10	0.20

Complete list of accessories is indicated in the terminal block datasheet including end stops.
Some accessories such as jumper bars may modify the terminal block's ratings: Complete information available in the accessories section of the catalog.

1SNK161042S0201

Technical data valid for copper conductors only.

ZS4-S-R1 screw clamp terminal blocks

Disconnect with blade - 6 mm 0.236 in spacing

4 mm²	
10 AWG	

1SNK161003F0014

ZS4-S-R1

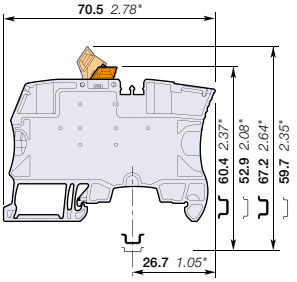

6 mm 0.236 in spacing

Description

- Simplify the alternated distribution thanks to the two jumper channels aligned with ZS4 feed-through terminal blocks,
- Ease your disconnect operations with the disconnect blade operated by hand or with a screwdriver.

Ordering details

Description		Color	Type	Part Number		Pkg qty	Weight (1 pce) g
Disconnect	Profile aligned with ZS4-SF	Grey	ZS4-S-R1	1SNK506310R0000		50	13.20
		Blue	ZS4-S-R1-BL	1SNK506320R0000		50	13.20
		Orange	ZS4-S-R1-OR	1SNK506330R0000		50	13.20

Main technical data

Connecting capacity		IEC	UL - CSA
1 conductor per clamp	Rigid: Solid/Stranded	0.2 ... 4 mm²	24 ... 10 AWG
	Flexible without ferrule	0.22 ... 4 mm²	
	Flexible with non insulated ferrule	0.22 ... 4 mm²	24 ... 12 AWG
	Flexible with insulated ferrule	0.22 ... 4 mm²	24 ... 12 AWG
	Gauge	A3-B3	
2 conductors per clamp	Rigid: Solid/Stranded	0.2 ... 1.5 mm²	24 ... 16 AWG
	Flexible without ferrule	0.2 ... 1.5 mm²	
	Flexible with twin ferrule	0.22 ... 1.5 mm²	24 ... 16 AWG
Rated current / Rated cross section		26 A / 4 mm²	26 A / 10 AWG
Rated short-time withstand current (1s)		480 A	
Rated voltage		400 V	150 V
Impulse withstand voltage		6000 V	
Protection		IP20	NEMA 1

Mounting instructions

Rail		TH 35-7.5, TH 35-15
Wire stripping length		10.5 mm 0.412 in
Tool		Flat screwdriver Ø 3.5 mm Ø 0.138 in
Torque		0.6 Nm ± 0.1 5.31 lb.in ± 0.885

Recommendation for best usage: in horizontal assemblies, disconnect terminal blocks should be mounted with fixed foot on top (power side) so that the disconnect knife does not partially close through gravity. Furthermore, as specified per IEC 60947-7-1, disconnect terminal blocks are intended to be used for temporary disconnection at zero potential and at no load.

The connecting capacity data for one Rigid: Solid/Stranded, or one Flexible conductor (when applicable) is a mandatory information required by IEC, UL and CSA standards (Copper conductors). All other data are provided as supplementary information only. For more details, please consult our CB, UL or CSA certificates and technical datasheet available on http://www.TE.com

CE | CB | RoHS | USR CNR | CSA | EAC | BV | DNV | Rina

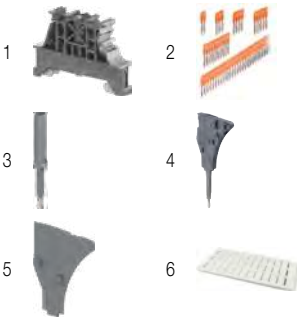

Accessories

	Description			Color	Type	Part Number		Pkg qty	Weight (1 pce) g
1	**End stops**	10 mm	0.394 in	Dark grey	BAM4	1SNK900001R0000		50	14.00
2	**Jumper bars**	2 poles	41 A (IEC)	Orange	JB6-2	1SNK906302R0000		50	1.30
		3 poles	41 A (IEC)		JB6-3	1SNK906303R0000		50	2.10
		4 poles	41 A (IEC)		JB6-4	1SNK906304R0000		50	2.90
		5 poles	41 A (IEC)		JB6-5	1SNK906305R0000		50	3.60
		10 poles	41 A (IEC)		JB6-10	1SNK906310R0000		20	7.40
3	**Test adapters**	For test plugs DIA 2 mm 0.079 in		Dark grey	TP2	1SNK900203R0000		20	1.70
		For test plugs DIA 4 mm 0.157 in			TP4	1SNK900205R0000		20	2.40
4	**Test connectors**	End module, 5.2 mm 0.205 in		Dark grey	TC5-R1	1SNK900201R0000		10	5.20
5	**Spacers**	0.8 mm	0.031 in	Dark grey	ES-TC6	1SNK900105R0000		10	0.80
6	**Terminal block markers**	Blank marker		White	MG-CPM 13 41791	1SNB041791R0612		1680	0.27
		Blank card			MC612	1SNK150000R0000		22	10.00
					MC612PA	1SNK159999R0000		20	11.00
		Universal wire markers holder		Grey	UMH	1SNK900611R0000		10	0.20

Complete list of accessories is indicated in the terminal block datasheet including end stops.
Some accessories such as jumper bars may modify the terminal block's ratings: Complete information available in the accessories section of the catalog.

1SNK161012S0201

Technical data valid for copper conductors only.

ZS4-S-T-R1 screw clamp terminal blocks

Disconnect with blade - with test socket - 6 mm 0.236 in spacing

4 mm²
10 AWG

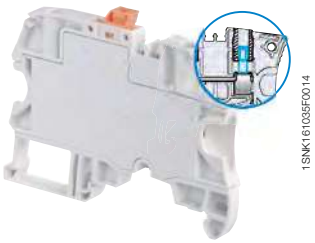

ZS4-S-T-R1

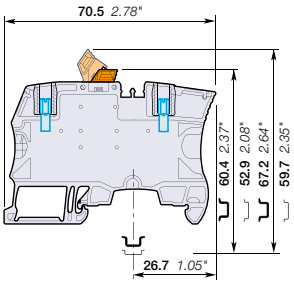

6 mm 0.236 in spacing

Description

- Ease your test operations with the 2 built-in test sockets,
- Screwdriver or hand operated disconnect blade,
- Simplify the alternated distribution thanks to the two jumper channels aligned with ZS4 feed-through terminal blocks.

Ordering details

Description		Color	Type	Part Number		Pkg qty	Weight (1 pce) g
Disconnect	Profile aligned with ZS4-SF, with 2 test sockets DIA 2 mm 0.079 in	Grey	ZS4-S-T2-R1	1SNK506311R0000		50	14.20
		Blue	ZS4-S-T2-R1-BL	1SNK506321R0000		50	14.20
		Orange	ZS4-S-T2-R1-OR	1SNK506331R0000		50	14.20
	Profile aligned with ZS4-SF, with 2 test sockets DIA 2.3 mm 0.091 in	Grey	ZS4-S-T2.3-R1	1SNK506312R0000		50	14.20

Main technical data

Connecting capacity		IEC	UL - CSA
1 conductor per clamp	Rigid: Solid/Stranded	0.2 ... 4 mm²	24 ... 10 AWG
	Flexible without ferrule	0.22 ... 4 mm²	
	Flexible with non insulated ferrule	0.22 ... 4 mm²	24 ... 12 AWG
	Flexible with insulated ferrule	0.22 ... 4 mm²	24 ... 12 AWG
	Gauge	A3-B3	
2 conductors per clamp	Rigid: Solid/Stranded	0.2 ... 1.5 mm²	24 ... 16 AWG
	Flexible without ferrule	0.2 ... 1.5 mm²	
	Flexible with twin ferrule	0.22 ... 1.5 mm²	24 ... 16 AWG
Rated current / Rated cross section		26 A / 4 mm²	26 A / 10 AWG
Rated short-time withstand current (1s)		480 A	
Rated voltage		400 V	150 V
Impulse withstand voltage		6000 V	
Protection		IP20	NEMA 1

Mounting instructions

Rail		TH 35-7.5, TH 35-15
Wire stripping length		10.5 mm 0.412 in
Tool		Flat screwdriver Ø 3.5 mm Ø 0.138 in
Torque		0.6 Nm ± 0.1 5.31 lb.in ± 0.885

Recommendation for best usage: in horizontal assemblies, disconnect terminal blocks should be mounted with fixed foot on top (power side) so that the disconnect knife does not partially close through gravity. Furthermore, as specified per IEC 60947-7-1, disconnect terminal blocks are intended to be used for temporary disconnection at zero potential and at no load.

The connecting capacity data for one Rigid: Solid/Stranded, or one Flexible conductor (when applicable) is a mandatory information required by IEC, UL and CSA standards (Copper conductors). All other data are provided as supplementary information only. For more details, please consult our CB, UL or CSA certificates and technical datasheet available on http://www.TE.com

CE | CB | RoHS | USR CNR | CSA | EAC | BV | DNV | Rina

Accessories

	Description			Color	Type	Part Number		Pkg qty	Weight (1 pce) g
1	**End stops**	10 mm	0.394 in	Dark grey	BAM4	1SNK900001R0000		50	14.00
2	**Jumper bars**	2 poles	41 A (IEC)	Orange	JB6-2	1SNK906302R0000		50	1.30
		3 poles	41 A (IEC)		JB6-3	1SNK906303R0000		50	2.10
		4 poles	41 A (IEC)		JB6-4	1SNK906304R0000		50	2.90
		5 poles	41 A (IEC)		JB6-5	1SNK906305R0000		50	3.60
		10 poles	41 A (IEC)		JB6-10	1SNK906310R0000		20	7.40
3	**Test connectors**	End module, 5.2 mm 0.205 in		Dark grey	TC5-R1	1SNK900201R0000		10	5.20
4	**Spacers**	0.8 mm	0.031 in	Dark grey	ES-TC6	1SNK900105R0000		10	0.80
5	**Terminal block markers**	Blank marker		White	MG-CPM 13 41791	1SNB041791R0612		1680	0.27
		Blank card			MC612	1SNK150000R0000		22	10.00
					MC612PA	1SNK159999R0000		20	11.00
		Universal wire markers holder		Grey	UMH	1SNK900611R0000		10	0.20

Complete list of accessories is indicated in the terminal block datasheet including end stops.
Some accessories such as jumper bars may modify the terminal block's ratings: Complete information available in the accessories section of the catalog.

1SNK161045S0201

Technical data valid for copper conductors only.

ZS6-S screw clamp terminal blocks

Disconnect with blade - 6 mm 0.236 in spacing

6 mm²
10 AWG

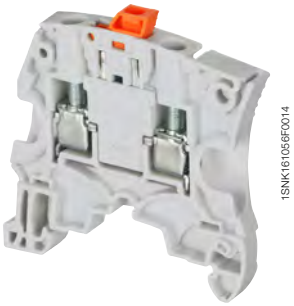

ZS6-S

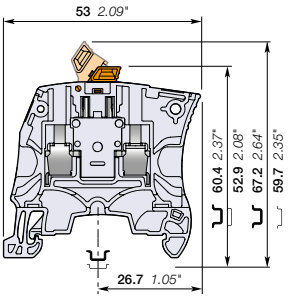

6 mm 0.236 in spacing

Description

- Ease your disconnect operations with the disconnect blade operated by hand or with a screwdriver,
- Same profile as ZS6 feed-through terminal block for aligned marking and identical end section use.

Ordering details

Description		Color	Type	Part Number		Pkg qty	Weight (1 pce) g
Disconnect	Profile aligned with ZS6	Grey	ZS6-S	1SNK506315R0000		50	8.60
		Blue	ZS6-S-BL	1SNK506322R0000		50	8.60

Main technical data

Connecting capacity		IEC	UL - CSA
1 conductor per clamp	Rigid: Solid/Stranded	0.2 ... 6 mm²	24 ... 10 AWG
	Flexible without ferrule	0.22 ... 6 mm²	
	Flexible with non insulated ferrule	0.22 ... 6 mm²	24 ... 12 AWG
	Flexible with insulated ferrule	0.22 ... 4 mm²	24 ... 12 AWG
	Gauge	A4-B3	
2 conductors per clamp	Rigid: Solid/Stranded	0.2 ... 2.5 mm²	24 ... 14 AWG
	Flexible without ferrule	0.22 ... 2.5 mm²	
	Flexible with twin ferrule	0.22 ... 2.5 mm²	24 ... 14 AWG
Rated current / Rated cross section		25 A / 4 mm²	25 A / 10 AWG
Maximum current / Maximum cross section		30 A / 6 mm²	
Rated short-time withstand current (1s)		480 A	
Rated voltage		500 V	300 V
Impulse withstand voltage		6000 V	
Protection		IP20	NEMA 1

Mounting instructions

Rail		TH 35-7.5, TH 35-15
Wire stripping length		10.5 mm 0.412 in
Tool		Flat screwdriver Ø 4 mm Ø 0.157 in
Torque		0.85 Nm ± 0.15 7.52 lb.in ± 1.33

Recommendation for best usage: in horizontal assemblies, disconnect terminal blocks should be mounted with fixed foot on top (power side) so that the disconnect knife does not partially close through gravity. Furthermore, as specified per IEC 60947-7-1, disconnect terminal blocks are intended to be used for temporary disconnection at zero potential and at no load.

The connecting capacity data for one Rigid: Solid/Stranded, or one Flexible conductor (when applicable) is a mandatory information required by IEC, UL and CSA standards (Copper conductors). All other data are provided as supplementary information only. For more details, please consult our CB, UL or CSA certificates and technical datasheet available on http://www.TE.com

CE CB RoHS USR CSA EAC BV DNV

Accessories

	Description			Color	Type	Part Number		Pkg qty	Weight (1 pce) g
1	**End stops**	10 mm	0.394 in	Dark grey	BAM4	1SNK900001R0000		50	14.00
2	**End sections**	2.2 mm	0.087 in	Dark grey	ES4	1SNK505910R0000		20	2.20
3	**Circuit separators**	3 mm	0.118 in	Dark grey	CS-R1	1SNK900103R0000		20	5.20
4	**Shield connectors**				SHBS	1SNK900600R0000		20	3.50
5	**Protecting covers**	6 mm 0.236 in spacing		Transparent	PL6	1SNK900619R0000		10	1.80
6	**Terminal block markers**	Blank marker		White	MG-CPM 13 41791	1SNB041791R0612		1680	0.27
		Blank card			MC612	1SNK150000R0000		22	10.00
					MC612PA	1SNK159999R0000		20	11.00
		Universal wire markers holder		Grey	UMH	1SNK900611R0000		10	0.20

Complete list of accessories is indicated in the terminal block datasheet including end stops.
Some accessories such as jumper bars may modify the terminal block's ratings: Complete information available in the accessories section of the catalog.

1SNK161046S0201

Technical data valid for copper conductors only.

ZS6-S-4S-T screw clamp terminal blocks

Disconnect with blade - with test socket screws - 6 mm 0.236 in spacing

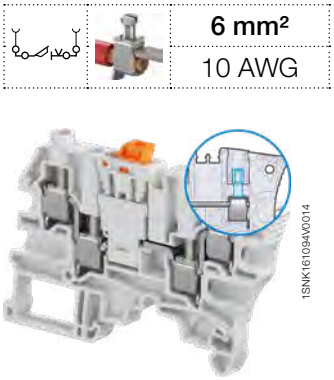

1SNK161094V0014

ZS6-S-4S-T

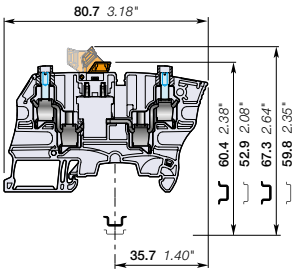

6 mm 0.236 in spacing

	6 mm²
	10 AWG

Description

- Recommended for energy markets and highly demanding applications requiring that only one conductor be connected per clamp,
- Ease your disconnect and test operations with the two built-in test socket screws,
- Simplify the alternated distribution thanks to the jumper channel.

Ordering details

Description		Color	Type	Part Number		Pkg qty	Weight (1 pce) g
Disconnect	with 2 test sockets DIA 2 mm 0,079 in	Grey	ZS6-S-4S-T2	1SNK506316R0000		50	18.40

Main technical data

Connecting capacity		IEC	UL - CSA
1 conductor per clamp	Rigid: Solid/Stranded	0.2 ... 6 mm²	24 ... 10 AWG
	Flexible without ferrule	0.22... 6 mm²	
	Flexible with non insulated ferrule	0.22 ... 4 mm²	24 ... 12 AWG
	Flexible with insulated ferrule	0.22 ... 4 mm²	24 ... 12 AWG
	Gauge	A4-B3	
2 conductors per clamp	Rigid: Solid/Stranded	0.2 ... 2.5 mm²	24 ... 14 AWG
	Flexible without ferrule	0.2 ... 2.5 mm²	
	Flexible with twin ferrule	0.22 ... 2.5 mm²	24 ... 14 AWG
Rated current / Rated cross section		27 A / 4 mm²	28 A / 10 AWG
Rated short-time withstand current (1s)		480 A	
Rated voltage		500 V	300 V
Impulse withstand voltage		6000 V	
Protection		IP20	NEMA 1

Mounting instructions

Rail	TH 35-7.5, TH 35-15
Wire stripping length	10.5 mm 0.413 in
Tool	Flat screwdriver Ø 4 mm Ø 0.157 in
Torque	0.85 Nm ± 0.15 7.52 lb.in ± 1.33

Recommendation for best usage: in horizontal assemblies, disconnect terminal blocks should be mounted with fixed foot on top (power side) so that the disconnect knife does not partially close through gravity. Furthermore, as specified per IEC 60947-7-1, disconnect terminal blocks are intended to be used for temporary disconnection at zero potential and at no load.

The connecting capacity data for one Rigid: Solid/Stranded, or one Flexible conductor (when applicable) is a mandatory information required by IEC, UL and CSA standards (Copper conductors). All other data are provided as supplementary information only. For more details, please consult our CB, UL or CSA certificates and technical datasheet available on http://www.TE.com

CE CB RoHS USR CSA EAC BV DNV

Accessories

	Description			Color	Type	Part Number		Pkg qty	Weight (1 pce) g
1	**End stops**	10 mm	0.394 in	Dark grey	BAM4	1SNK900001R0000		50	14.00
2	**End sections**	2.2 mm	0.087 in	Dark grey	ES6-4S	1SNK505911R0000		20	3.10
3	**Jumper bars**	2 poles	41 A (IEC)	Orange	JB6-2	1SNK906302R0000		50	1.30
		3 poles	41 A (IEC)		JB6-3	1SNK906303R0000		50	2.10
		4 poles	41 A (IEC)		JB6-4	1SNK906304R0000		50	2.90
		5 poles	41 A (IEC)		JB6-5	1SNK906305R0000		50	3.60
		10 poles	41 A (IEC)		JB6-10	1SNK906310R0000		20	7.40
4	**Circuit separators**	3 mm	0.118 in	Dark grey	CS-R1	1SNK900103R0000		20	5.20
5	**Test adapters**	For test plugs DIA 2 mm 0.079 in		Dark grey	TP2	1SNK900203R0000		20	1.70
		For test plugs DIA 4 mm 0.157 in			TP4	1SNK900205R0000		20	2.40
6	**Test connectors**	End module, 5.2 mm 0.205 in		Dark grey	TC5-R1	1SNK900201R0000		10	5.20
7	**Spacers**	0.8 mm	0.031 in	Dark grey	ES-TC6	1SNK900105R0000		10	0.80
8	**Terminal block markers**	Blank marker		White	MG-CPM 13 41791	1SNB041791R0612		1680	0.27
		Blank card			MC612	1SNK150000R0000		22	10.00
					MC612PA	1SNK159999R0000		20	11.00
		Universal wire markers holder		Grey	UMH	1SNK900611R0000		10	0.20

Complete list of accessories is indicated in the terminal block datasheet including end stops.
Some accessories such as jumper bars may modify the terminal block's ratings: Complete information available in the accessories section of the catalog.

1SNK161071S0201

Technical data valid for copper conductors only.

ZS10-S screw clamp terminal blocks

Disconnect with blade - 8 mm 0.315 in spacing

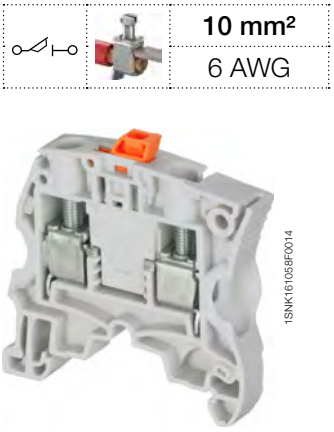

10 mm²	
6 AWG	

1SNK161059F0014

ZS10-S

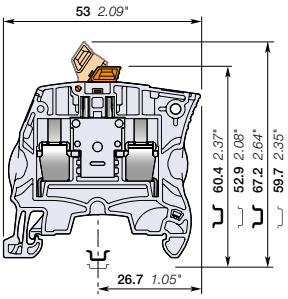

8 mm 0.315 in spacing

Description

- Ease your disconnect operations with the disconnect blade operated by hand or with a screwdriver,
- Same profile as ZS10 feed-through terminal block for aligned marking and identical end section use.

Ordering details

Description		Color	Type	Part Number		Pkg qty	Weight (1 pce) g
Disconnect	Profile aligned with ZS10	Grey	ZS10-S	1SNK508315R0000		50	8.60
		Blue	ZS10-S-BL	1SNK508320R0000		50	8.60

Main technical data

Connecting capacity		IEC	UL - CSA
1 conductor per clamp	Rigid: Solid/Stranded	0.2 ... 10 mm²	24 ... 6 AWG
	Flexible without ferrule	0.22 ... 10 mm²	
	Flexible with non insulated ferrule	0.22 ... 10 mm²	24 ... 12 AWG
	Flexible with insulated ferrule	0.22 ... 6 mm²	24 ... 12 AWG
	Gauge	A5-B5	
2 conductors per clamp	Rigid: Solid/Stranded	0.5 ... 4 mm²	20 ... 12 AWG
	Flexible without ferrule	0.5 ... 4 mm²	
	Flexible with twin ferrule	0.5 ... 4 mm²	20 ... 12 AWG
Rated current / Rated cross section		25 A / 4 mm²	25 A / 6 AWG
Maximum current / Maximum cross section		42 A / 10 mm²	
Rated short-time withstand current (1s)		480 A	
Rated voltage		630 V	300 V
Impulse withstand voltage		6000 V	
Protection		IP20	NEMA 1

Mounting instructions

Rail	TH 35-7.5, TH 35-15
Wire stripping length	12 mm 0.472 in
Tool	Flat screwdriver Ø 4 mm Ø 0.157 in
Torque	1.3 Nm ± 0.3 11.5 lb.in ± 2.65

Recommendation for best usage: in horizontal assemblies, disconnect terminal blocks should be mounted with fixed foot on top (power side) so that the disconnect knife does not partially close through gravity. Furthermore, as specified per IEC 60947-7-1, disconnect terminal blocks are intended to be used for temporary disconnection at zero potential and at no load.

The connecting capacity data for one Rigid: Solid/Stranded, or one Flexible conductor (when applicable) is a mandatory information required by IEC, UL and CSA standards (Copper conductors). All other data are provided as supplementary information only. For more details, please consult our CB, UL or CSA certificates and technical datasheet available on http://www.TE.com

CE CB RoHS USR CSA EAC BV DNV

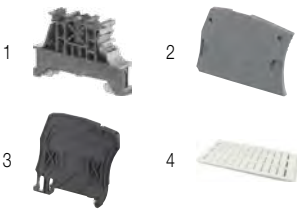

Accessories

	Description			Color	Type	Part Number		Pkg qty	Weight (1 pce) g
1	**End stops**	10 mm	0.394 in	Dark grey	BAM4	1SNK900001R0000		50	14.00
2	**End sections**	2.2 mm	0.087 in	Dark grey	ES4	1SNK505910R0000		20	2.20
3	**Circuit separators**	3 mm	0.118 in	Dark grey	CS-R1	1SNK900103R0000		20	5.20
4	**Terminal block markers**	Blank marker		White	MG-CPM 13 41791	1SNB041791R0612		1680	0.27
		Blank card			MC812	1SNK160000R0000		22	10.00
					MC812PA	1SNK169999R0000		20	14.00
		Universal wire markers holder		Grey	UMH	1SNK900611R0000		10	0.20

Complete list of accessories is indicated in the terminal block datasheet including end stops.
Some accessories such as jumper bars may modify the terminal block's ratings: Complete information available in the accessories section of the catalog.

1SNK161050S0201

Technical data valid for copper conductors only.

ZS4-SP screw clamp terminal blocks

Disconnect with plug - 5.2 mm 0.205 in spacing

4 mm²
10 AWG

Description

- Save time with our screwless component holder plug,
- Same profile as ZS4 feed-through terminal block for aligned marking and identical end section use.

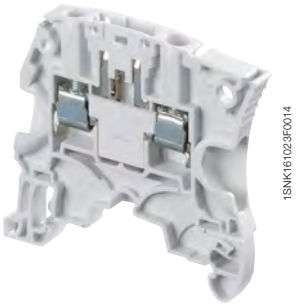

ZS4-SP

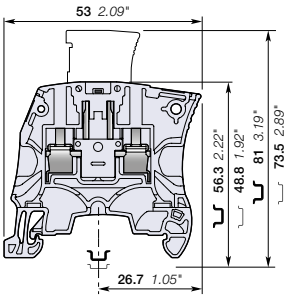

5.2 mm 0.205 in spacing

Ordering details

Description		Color	Type	Part Number		Pkg qty	Weight (1 pce) g
Disconnect	Profile aligned with ZS4, plug delivered separetely	Grey	ZS4-SP	1SNK505313R0000		50	8.20

Main technical data

Connecting capacity		IEC	UL - CSA
1 conductor per clamp	Rigid: Solid/Stranded	0.2 ... 4 mm²	24 ... 10 AWG
	Flexible without ferrule	0.22 ... 4 mm²	
	Flexible with non insulated ferrule	0.22 ... 4 mm²	24 ... 10 AWG
	Flexible with insulated ferrule	0.22 ... 2.5 mm²	24 ... 14 AWG
	Gauge	A3-B3	
2 conductors per clamp	Rigid: Solid/Stranded	0.2 ... 1.5 mm²	24 ... 16 AWG
	Flexible without ferrule	0.2 ... 1.5 mm²	
	Flexible with twin ferrule	0.22 ... 1.5 mm²	24 ... 16 AWG
Rated current / Rated cross section		18 A / 2.5 mm²	18 A / 10 AWG
Rated short-time withstand current (1s)		300 A	
Rated voltage		400 V	150 V
Impulse withstand voltage		6000 V	
Protection		IP20	NEMA 1

Mounting instructions

Rail		TH 35-7.5, TH 35-15
Wire stripping length		10.5 mm 0.412 in
Tool		Flat screwdriver Ø 3.5 mm Ø 0.138 in
Torque		0.6 Nm ± 0.1 5.31 lb.in ± 0.885

The connecting capacity data for one Rigid: Solid/Stranded, or one Flexible conductor (when applicable) is a mandatory information required by IEC, UL and CSA standards (Copper conductors). All other data are provided as supplementary information only. For more details, please consult our CB, UL or CSA certificates and technical datasheet available on http://www.TE.com

CE RoHS USR CNR CSA EAC

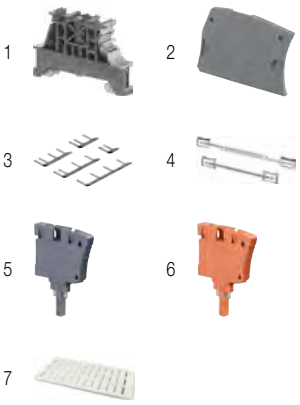

Accessories

	Description			Color	Type	Part Number		Pkg qty	Weight (1 pce) g
1	**End stops**	10 mm	0.394 in	Dark grey	BAM4	1SNK900001R0000		50	14.00
2	**End sections**	2.2 mm	0.087 in	Dark grey	ES4	1SNK505910R0000		20	2.20
3	**Lateral jumper bars**	2 poles	30 A (IEC)	Grey	PC5-2	1SNA113542R1000		10	1.80
		10 poles	30 A (IEC)		PC5-10	1SNA113544R1200		10	6.00
4	**Shield connectors**				SHBS	1SNK900600R0000		20	3.50
5	**Component plugs**	Components in series with circuit		Dark grey	PG5	1SNK900401R0000		20	3.50
6	**Disconnect plugs**	Equipped with linking bar		Orange	PG5-R1	1SNK900402R0000		20	3.50
7	**Terminal block markers**	Blank marker		White	MG-CPM 13 41790	1SNB041790R0512		1960	0.23
		Blank card			MC512	1SNK140000R0000		22	9.00
					MC512PA	1SNK149999R0000		20	10.00
		Universal wire markers holder		Grey	UMH	1SNK900611R0000		10	0.20

Complete list of accessories is indicated in the terminal block datasheet including end stops.
Some accessories such as jumper bars may modify the terminal block's ratings: Complete information available in the accessories section of the catalog.

1SNK161033S0201

Technical data valid for copper conductors only.

ZS4-SP-T2 screw clamp terminal blocks

Disconnect with plug - with test socket - 5.2 mm 0.205 in spacing

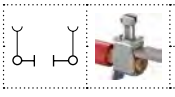

4 mm²
10 AWG

ZS4-SP-T2

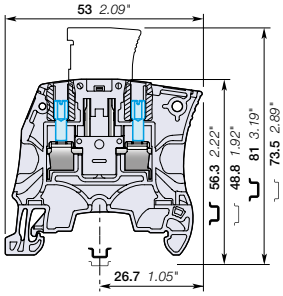

5.2 mm 0.205 in spacing

Description

- Ease your test operations with the 2 built-in test sockets DIA 2 mm 0.079 in,
- Save time with our screwless component holder plug,
- Same profile as ZS4 feed-through terminal block for aligned marking and identical end section use.

Ordering details

Description		Color	Type	Part Number		Pkg qty	Weight (1 pce) g
Disconnect	Profile aligned with ZS4, with 2 test sockets DIA 2 mm 0.079 in, plug delivered separetely	Grey	ZS4-SP-T2	1SNK505314R0000		50	8.40

Main technical data

Connecting capacity		IEC	UL - CSA
1 conductor per clamp	Rigid: Solid/Stranded	0.2 ... 4 mm²	24 ... 10 AWG
	Flexible without ferrule	0.22 ... 4 mm²	
	Flexible with non insulated ferrule	0.22 ... 4 mm²	24 ... 10 AWG
	Flexible with insulated ferrule	0.22 ... 2.5 mm²	24 ... 14 AWG
	Gauge	A3-B3	
2 conductors per clamp	Rigid: Solid/Stranded	0.2 ... 1.5 mm²	24 ... 16 AWG
	Flexible without ferrule	0.2 ... 1.5 mm²	
	Flexible with twin ferrule	0.22 ... 1.5 mm²	24 ... 16 AWG
Rated current / Rated cross section		18 A / 2.5 mm²	18 A / 10 AWG
Rated short-time withstand current (1s)		300 A	
Rated voltage		400 V	150 V
Impulse withstand voltage		6000 V	
Protection		IP20	NEMA 1

Mounting instructions

Rail	TH 35-7.5, TH 35-15
Wire stripping length	10.5 mm 0.412 in
Tool	Flat screwdriver Ø 3.5 mm Ø 0.138 in
Torque	0.6 Nm ± 0.1 5.31 lb.in ± 0.885

The connecting capacity data for one Rigid: Solid/Stranded, or one Flexible conductor (when applicable) is a mandatory information required by IEC, UL and CSA standards (Copper conductors). All other data are provided as supplementary information only. For more details, please consult our CB, UL or CSA certificates and technical datasheet available on http://www.TE.com

CE RoHS USR CNR CSA EAC

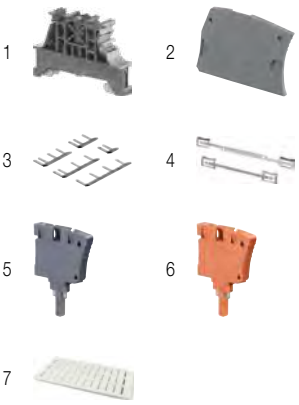

Accessories

	Description			Color	Type	Part Number		Pkg qty	Weight (1 pce) g
1	**End stops**	10 mm	0.394 in	Dark grey	BAM4	1SNK900001R0000		50	14.00
2	**End sections**	2.2 mm	0.087 in	Dark grey	ES4	1SNK505910R0000		20	2.20
3	**Lateral jumper bars**	2 poles	30 A (IEC)	Grey	PC5-2	1SNA113542R1000		10	1.80
		10 poles	30 A (IEC)		PC5-10	1SNA113544R1200		10	6.00
4	**Shield connectors**				SHBS	1SNK900600R0000		20	3.50
5	**Component plugs**	Components in series with circuit		Dark grey	PG5	1SNK900401R0000		20	3.50
6	**Disconnect plugs**	Equipped with linking bar		Orange	PG5-R1	1SNK900402R0000		20	3.50
7	**Terminal block markers**	Blank marker		White	MG-CPM 13 41790	1SNB041790R0512		1960	0.23
		Blank card			MC512	1SNK140000R0000		22	9.00
					MC512PA	1SNK149999R0000		20	10.00
		Universal wire markers holder		Grey	UMH	1SNK900611R0000		10	0.20

Complete list of accessories is indicated in the terminal block datasheet including end stops.
Some accessories such as jumper bars may modify the terminal block's ratings: Complete information available in the accessories section of the catalog.

1SNK161041S0201

Technical data valid for copper conductors only.

ZS4-SP-R1 screw clamp terminal blocks

Disconnect with plug - 6 mm 0.236 in spacing

4 mm²

10 AWG

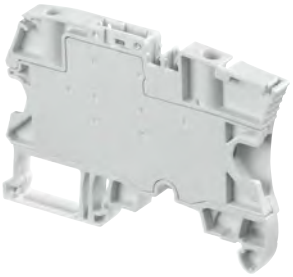

1SNK161022F0014

ZS4-SP-R1

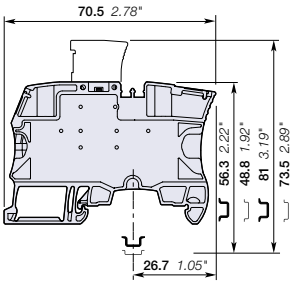

6 mm 0.236 in spacing

Description

- Simplify the alternated distribution between feed-through and disconnect circuits thanks to the two aligned jumper channels,
- Save time with our screwless component holder plug.

Ordering details

Description		Color	Type	Part Number		Pkg qty	Weight (1 pce) g
Disconnect	Profile aligned with ZS4-SF, plug delivered separetely	Grey	ZS4-SP-R1	1SNK506313R0000		50	14.20

Main technical data

Connecting capacity		IEC	UL - CSA
1 conductor per clamp	Rigid: Solid/Stranded	0.2 ... 4 mm²	24 ... 10 AWG
	Flexible without ferrule	0.22 ... 4 mm²	
	Flexible with non insulated ferrule	0.22 ... 4 mm²	24 ... 12 AWG
	Flexible with insulated ferrule	0.22 ... 4 mm²	24 ... 12 AWG
	Gauge	A3-B3	
2 conductors per clamp	Rigid: Solid/Stranded	0.2 ... 1.5 mm²	24 ... 16 AWG
	Flexible without ferrule	0.2 ... 1.5 mm²	
	Flexible with twin ferrule	0.22 ... 1.5 mm²	24 ... 16 AWG
Rated current / Rated cross section		18 A / 2.5 mm²	20 A / 10 AWG
Rated short-time withstand current (1s)		300 A	
Rated voltage		400 V	150 V
Impulse withstand voltage		6000 V	
Protection		IP20	NEMA 1

Mounting instructions

Rail		TH 35-7.5, TH 35-15
Wire stripping length		10.5 mm 0.412 in
Tool		Flat screwdriver Ø 3.5 mm Ø 0.138 in
Torque		0.6 Nm ± 0.1 5.31 lb.in ± 0.885

The connecting capacity data for one Rigid: Solid/Stranded, or one Flexible conductor (when applicable) is a mandatory information required by IEC, UL and CSA standards (Copper conductors). All other data are provided as supplementary information only. For more details, please consult our CB, UL or CSA certificates and technical datasheet available on http://www.TE.com

CE | RoHS | USR CNR | CSA | EAC

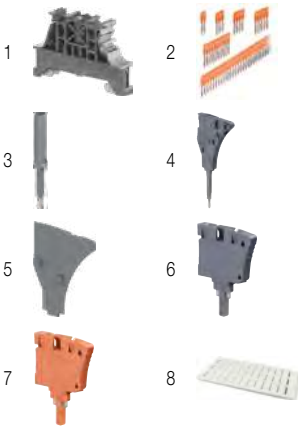

Accessories

	Description			Color	Type	Part Number		Pkg qty	Weight (1 pce) g
1	**End stops**	10 mm	0.394 in	Dark grey	BAM4	1SNK900001R0000		50	14.00
2	**Jumper bars**	2 poles	41 A (IEC)	Orange	JB6-2	1SNK906302R0000		50	1.30
		3 poles	41 A (IEC)		JB6-3	1SNK906303R0000		50	2.10
		4 poles	41 A (IEC)		JB6-4	1SNK906304R0000		50	2.90
		5 poles	41 A (IEC)		JB6-5	1SNK906305R0000		50	3.60
		10 poles	41 A (IEC)		JB6-10	1SNK906310R0000		20	7.40
3	**Test adapters**	For test plugs DIA 2 mm 0.079 in		Dark grey	TP2	1SNK900203R0000		20	1.70
		For test plugs DIA 4 mm 0.157 in			TP4	1SNK900205R0000		20	2.40
4	**Test connectors**	End module, 5.2 mm 0.205 in		Dark grey	TC5-R1	1SNK900201R0000		10	5.20
5	**Spacers**	0.8 mm	0.031 in	Dark grey	ES-TC6	1SNK900105R0000		10	0.80
6	**Component plugs**	Components in series with circuit		Dark grey	PG5	1SNK900401R0000		20	3.50
7	**Disconnect plugs**	Equipped with linking bar		Orange	PG5-R1	1SNK900402R0000		20	3.50
8	**Terminal block markers**	Blank marker		White	MG-CPM 13 41791	1SNB041791R0612		1680	0.27
		Blank card			MC612	1SNK150000R0000		22	10.00
					MC612PA	1SNK159999R0000		20	11.00
		Universal wire markers holder		Grey	UMH	1SNK900611R0000		10	0.20

Complete list of accessories is indicated in the terminal block datasheet including end stops.
Some accessories such as jumper bars may modify the terminal block's ratings: Complete information available in the accessories section of the catalog.

1SNK161039S0201

Technical data valid for copper conductors only.

ZS4-SP-T2-R1 screw clamp terminal blocks

Disconnect with plug - with test socket - 6 mm 0.236 in spacing

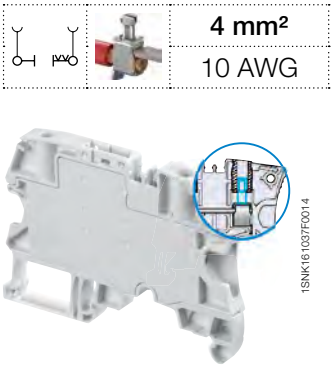

1SNK161037F0014

ZS4-SP-T2-R1

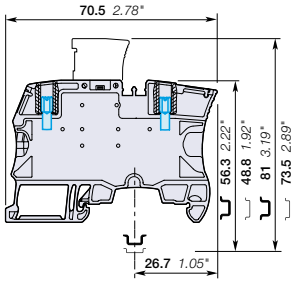

6 mm 0.236 in spacing

4 mm²
10 AWG

Description

- Ease your test operations with the 2 built-in test sockets DIA 2 mm 0.079 in,
- Save time with our screwless component holder plug,
- Simplify the distribution between feed-through and disconnect circuits thanks to the two aligned jumper channels.

Ordering details

Description		Color	Type	Part Number		Pkg qty	Weight (1 pce) g
Disconnect	Profile aligned with ZS4-SF, with 2 test sockets DIA 2 mm 0.079 in, plug delivered separetely	Grey	ZS4-SP-T2-R1	1SNK506314R0000		50	14.20

Main technical data

Connecting capacity		IEC	UL - CSA
1 conductor per clamp	Rigid: Solid/Stranded	0.2 ... 4 mm²	24 ... 10 AWG
	Flexible without ferrule	0.22 ... 4 mm²	
	Flexible with non insulated ferrule	0.22 ... 4 mm²	24 ... 12 AWG
	Flexible with insulated ferrule	0.22 ... 4 mm²	24 ... 12 AWG
	Gauge	A3-B3	
2 conductors per clamp	Rigid: Solid/Stranded	0.2 ... 1.5 mm²	24 ... 16 AWG
	Flexible without ferrule	0.2 ... 1.5 mm²	
	Flexible with twin ferrule	0.22 ... 1.5 mm²	24 ... 16 AWG
Rated current / Rated cross section		18 A / 2.5 mm²	20 A / 10 AWG
Rated short-time withstand current (1s)		300 A	
Rated voltage		400 V	150 V
Impulse withstand voltage		6000 V	
Protection		IP20	NEMA 1

Mounting instructions

Rail		TH 35-7.5, TH 35-15
Wire stripping length		10.5 mm 0.412 in
Tool		Flat screwdriver Ø 3.5 mm Ø 0.138 in
Torque		0.6 Nm ± 0.1 5.31 lb.in ± 0.885

The connecting capacity data for one Rigid: Solid/Stranded, or one Flexible conductor (when applicable) is a mandatory information required by IEC, UL and CSA standards (Copper conductors). All other data are provided as supplementary information only. For more details, please consult our CB, UL or CSA certificates and technical datasheet available on http://www.TE.com

CE RoHS USR CNR CSA EAC

Accessories

	Description			Color	Type	Part Number		Pkg qty	Weight (1 pce) g
1	**End stops**	10 mm	0.394 in	Dark grey	BAM4	1SNK900001R0000		50	14.00
2	**Jumper bars**	2 poles	41 A (IEC)	Orange	JB6-2	1SNK906302R0000		50	1.30
		3 poles	41 A (IEC)		JB6-3	1SNK906303R0000		50	2.10
		4 poles	41 A (IEC)		JB6-4	1SNK906304R0000		50	2.90
		5 poles	41 A (IEC)		JB6-5	1SNK906305R0000		50	3.60
		10 poles	41 A (IEC)		JB6-10	1SNK906310R0000		20	7.40
3	**Test connectors**	End module, 5.2 mm 0.205 in		Dark grey	TC5-R1	1SNK900201R0000		10	5.20
4	**Spacers**	0.8 mm	0.031 in	Dark grey	ES-TC6	1SNK900105R0000		10	0.80
5	**Component plugs**	Components in series with circuit		Dark grey	PG5	1SNK900401R0000		20	3.50
6	**Disconnect plugs**	Equipped with linking bar		Orange	PG5-R1	1SNK900402R0000		20	3.50
7	**Terminal block markers**	Blank marker		White	MG-CPM 13 41791	1SNB041791R0612		1680	0.27
		Blank card			MC612	1SNK150000R0000		22	10.00
					MC612PA	1SNK159999R0000		20	11.00
		Universal wire markers holder		Grey	UMH	1SNK900611R0000		10	0.20

Complete list of accessories is indicated in the terminal block datasheet including end stops.
Some accessories such as jumper bars may modify the terminal block's ratings: Complete information available in the accessories section of the catalog.

1SNK161040S0201

Technical data valid for copper conductors only.

ZS10-SP screw clamp terminal blocks

Disconnect with plug - 8 mm 0.315 in spacing

10 mm²

6 AWG

Description

- Save time with our screwless component holder plug,
- Same profile as ZS10 feed-through terminal block for aligned marking and identical end section use.

1SNK161060F0014

ZS10-SP

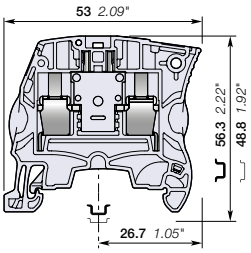

8 mm 0.315 in spacing

Ordering details

Description		Color	Type	Part Number		Pkg qty	Weight (1 pce) g
Disconnect	Profile aligned with ZS10	Grey	ZS10-SP	1SNK508316R0000		50	8.60

Main technical data

Connecting capacity		IEC	UL - CSA
1 conductor per clamp	Rigid: Solid/Stranded	0.2 ... 10 mm²	24 ... 6 AWG
	Flexible without ferrule	0.22 ... 10 mm²	
	Flexible with non insulated ferrule	0.22 ... 10 mm²	24 ... 8 AWG
	Flexible with insulated ferrule	0.22 ... 6 mm²	24 ... 8 AWG
	Gauge	A5-B5	
2 conductors per clamp	Rigid: Solid/Stranded	0.5 ... 4 mm²	20 ... 12 AWG
	Flexible without ferrule	0.5 ... 4 mm²	
	Flexible with twin ferrule	0.5 ... 4 mm²	20 ... 12 AWG
Rated current / Rated cross section		18 A / 2.5 mm²	18 A / 6 AWG
Maximum current / Maximum cross section		18 A / 10 mm²	
Rated short-time withstand current (1s)		300 A	
Rated voltage		630 V	300 V
Impulse withstand voltage		6000 V	
Protection		IP20	NEMA 1

Mounting instructions

Rail	TH 35-7.5, TH 35-15
Wire stripping length	12 mm 0.472 in
Tool	Flat screwdriver Ø 4 mm Ø 0.157 in
Torque	1.3 Nm ± 0.3 11.5 lb.in ± 2.65

The connecting capacity data for one Rigid: Solid/Stranded, or one Flexible conductor (when applicable) is a mandatory information required by IEC, UL and CSA standards (Copper conductors). All other data are provided as supplementary information only. For more details, please consult our CB, UL or CSA certificates and technical datasheet available on http://www.TE.com

CE RoHS USR CSA EAC

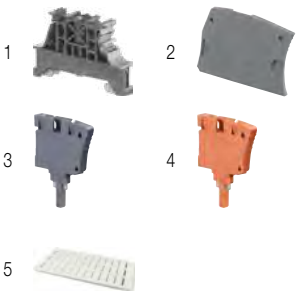

Accessories

	Description			Color	Type	Part Number		Pkg qty	Weight (1 pce) g
1	**End stops**	10 mm	0.394 in	Dark grey	BAM4	1SNK900001R0000		50	14.00
2	**End sections**	2.2 mm	0.087 in	Dark grey	ES4	1SNK505910R0000		20	2.20
3	**Component plugs**	Components in series with circuit		Dark grey	PG5	1SNK900401R0000		20	3.50
4	**Disconnect plugs**	Equipped with linking bar		Orange	PG5-R1	1SNK900402R0000		20	3.50
5	**Terminal block markers**	Blank marker		White	MG-CPM 13 41791	1SNB041791R0612		1680	0.27
		Blank card			MC812	1SNK160000R0000		22	10.00
					MC812PA	1SNK169999R0000		20	14.00
		Universal wire markers holder		Grey	UMH	1SNK900611R0000		10	0.20

Complete list of accessories is indicated in the terminal block datasheet including end stops.
Some accessories such as jumper bars may modify the terminal block's ratings: Complete information available in the accessories section of the catalog.

1SNK161051S0201

Technical data valid for copper conductors only.

Optimize your control circuit protection

Our SNK series fuse terminal blocks offer a full set of features and functions to protect your control circuits with efficiency and reliability.
All terminal blocks complies with the latest evolution of the international standards IEC 60947-7-3 (“Ancillary equipment safety requirements for fuse terminal blocks.”) which fixes precise temperature constraint for short-circuit and overload protection (information in the catalogue pages related to the products).

Qualified for worldwide markets and applications
Eco-designed according to international environmental standards in sustainable development.

Select the right fuse holder for the right application

1 standard applications

The standard fuse holders feature compact dimensions while offering compatibility with 5 x 20 and 5 x 25 mm fuses. double deck terminal blocks allow efficient space reduction for panels with space constraints.

2 Expert for convenient circuit distribution

The expert fuse holders are equipped with two central jumper channels for convenient common distribution and are aligned with feed-through and disconnect terminal blocks. They facilitate alternated potential distribution and reduce wiring.

Additional features for easy trouble shooting and testing

Performant blown fuse indicators

Low leakage current (< 0.5 mA) allows the protection of low current circuits such as PLC’s inputs without any risk of circuit disturbances.
Large voltage range (24/110 V and 110/250 V AC/DC) reduces the number of variants and allows adaptation to worldwide applications (24/110 V range covers North american market needs).

Easy testing

Some terminal blocks are equipped with Dia 2 mm built-in test socket screws for circuit testing while respecting the IP20 touch proof protection.

1
5x20 and 5x25 mm fuses
Compact and high density

2
5x20 and 6.3x32 mm fuses
Easy potential distribution

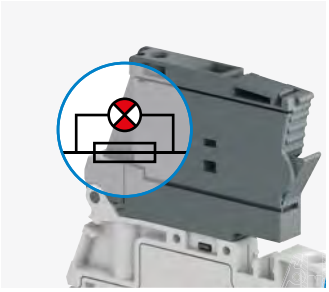

Low leakage current blown fuse indicator.
Large voltage range: (24/110 V and 110/250 V AC and DC)

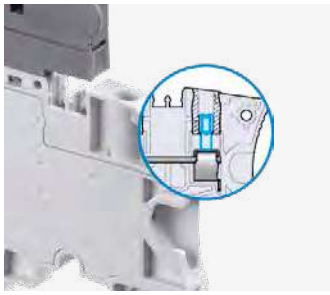

Convenient testing through built in test socket screws

1SNK161085S0201

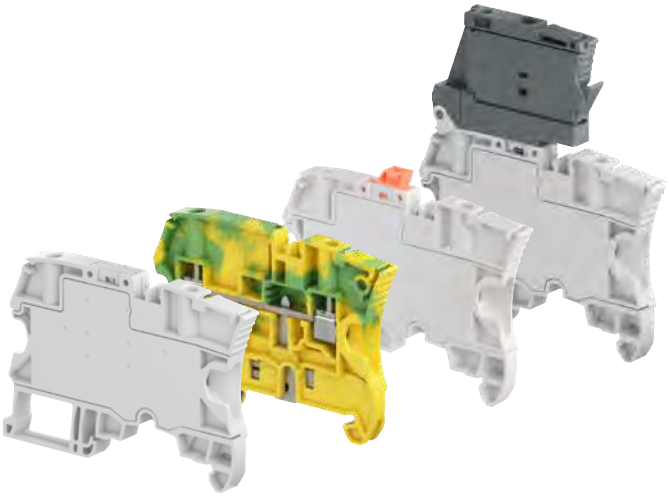

The smart choice for process automation

Large process automation applications typically require the use of a large number of digital or analog signals and sensors. Indeed, marshalling cabinets ensure an important cross wiring function, since the incoming field signal and the channel quantity of the I/O card of the controller (DCS, large PLC's) is always different. They facilitate the maintenance operations and ease the system modifications.

SNK aligned terminal blocks offering:

SNK series now features a full set of aligned terminal blocks matching the marshalling panels typical configurations. Fuse, disconnect, feed-through and ground terminal blocks with identical profile are providing compact and convenient solution. With only 6 mm spacing, two aligned screwless jumper channels, central large marking as well as aligned conductor entries, they are perfectly adapted to alternative potential distribution while still easy to connect.

Typical marshalling configurations

Digital signals

Popular potential distribution via double center channel.

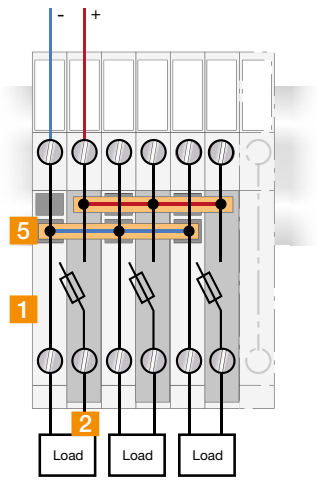

Disconnect functions equipped with test points allow total isolation of circuits, ease circuit testing during start-up, test and maintenance operations.

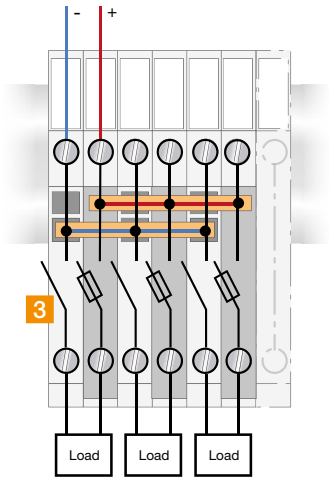

Analog

Potential distribution for analog signals. Ground terminal blocks allow reliable connection of cable shields to the ground sparing the use of external shield bar.

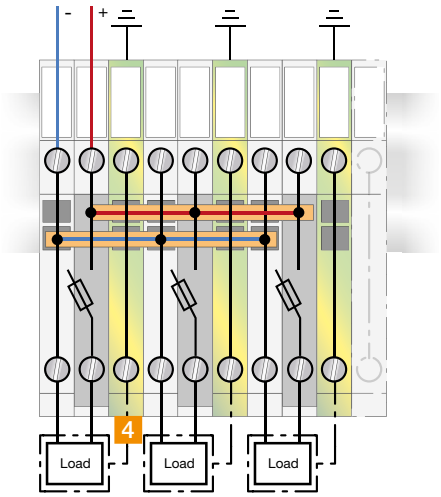

1 ZS4-R2

2 ZS4-SF

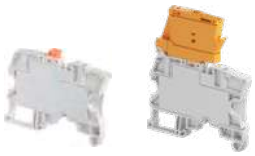

3 ZS4-S-R1 or ZS4-S-R2

4 ZS4-PE-R2

5 JB6-...

1SNK161086S0201

ZS4-SF1 screw clamp terminal blocks

For 5 x 20 and 5 x 25 fuses - 8 mm 0.315 in spacing

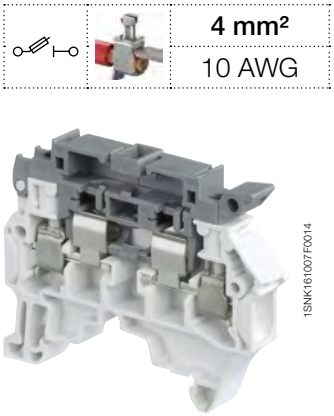

4 mm²	
10 AWG	

Description

Protect your circuit with 5x25 and 5x20 fuse terminal blocks, compliant with IEC 60947-7-3 standard (fuse not supplied with the terminal blocks).

1SNK161007F0014

ZS4-SF1

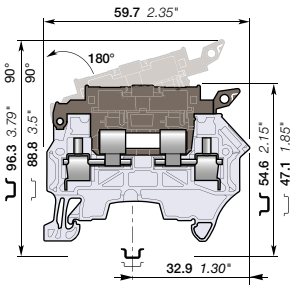

8 mm 0.315 in spacing

Ordering details

Description	Color	Type	Part Number		Pkg qty	Weight (1 pce) g
Fuse	Grey, dark grey	ZS4-SF1	1SNK508410R0000		50	13.30
	Orange, dark grey	ZS4-SF1-OR	1SNK508430R0000		50	13.30

Main technical data

Connecting capacity		IEC	UL - CSA
1 conductor per clamp	Rigid: Solid/Stranded	0.2 ... 4 mm²	24 ... 10 AWG
	Flexible without ferrule	0.22 ... 4 mm²	
	Flexible with non insulated ferrule	0.22 ... 4 mm²	24 ... 12 AWG
	Flexible with insulated ferrule	0.22 ... 4 mm²	24 ... 12 AWG
	Gauge	A3-B3	
2 conductors per clamp	Rigid: Solid/Stranded	0.2 ... 2.5 mm²	24 ... 14 AWG
	Flexible without ferrule	0.2 ... 2.5 mm²	
	Flexible with twin ferrule	0.22 ... 2.5 mm²	24 ... 14 AWG
Rated current / Rated cross section		6.3 A / 4 mm²	10 A / 10 AWG
Rated voltage		630 V	300 V
Impulse withstand voltage		8000 V	
Protection		IP20	NEMA 1

Mounting instructions

Rail	TH 35-7.5, TH 35-15
Wire stripping length	11 mm 0.432 in
Tool	Flat screwdriver Ø 3.5 mm Ø 0.138 in
Torque	0.6 Nm ± 0.1 5.31 lb.in ± 0.885

Separate arrangement		Assembly composed of 1 fuse terminal block in between non fuse terminal blocks	Overload and short-circuit protection	2.5 W
			Exclusive short-circuit protection	4 W
Compound arrangement		Assembly composed of 5 fuse terminal blocks	Overload and short-circuit protection	1.6 W
			Exclusive short-circuit protection	4 W

The connecting capacity data for one Rigid: Solid/Stranded, or one Flexible conductor (when applicable) is a mandatory information required by IEC, UL and CSA standards (Copper conductors). All other data are provided as supplementary information only. For more details, please consult our CB, UL or CSA certificates and technical datasheet available on http://www.TE.com

CE | CB | RoHS | USR CNR | CSA | EAC | BV | DNV | Rina

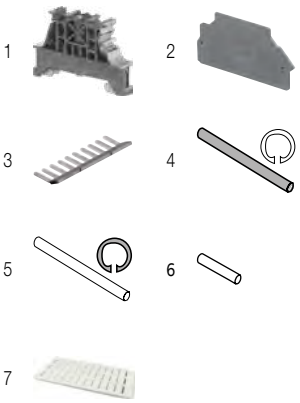

Accessories

	Description			Color	Type	Part Number		Pkg qty	Weight (1 pce) g
1	End stops	10 mm	0.394 in	Dark grey	BAM4	1SNK900001R0000		50	14.00
2	End sections	1.5 mm	0.059 in	Dark grey	ES4-SF	1SNK508960R0000		20	1.80
3	Lateral jumper bars	10 poles	35 A (IEC)	Grey	PC81-10	1SNA173523R1100		10	5.00
4	Assembly rods	2 poles			TGA8	1SNA168672R1100		10	1.00
		3 poles			TGA8	1SNA168673R1200		10	1.50
		4 poles			TGA8	1SNA168674R1300		10	2.00
5	Spring retaining Rings				ANT	1SNA168675R1400		10	
6	Neutral cartridge	5x25			CN5	1SNA179371R1600		10	3.9
7	Terminal block markers	Blank marker		White	MG-CPM 13 41791	1SNB041791R0612		1680	0.27
		Blank card			MC812	1SNK160000R0000		22	10.00
					MC812PA	1SNK169999R0000		20	14.00
		Universal wire markers holder		Grey	UMH	1SNK900611R0000		10	0.20

Complete list of accessories is indicated in the terminal block datasheet including end stops.
Some accessories such as jumper bars may modify the terminal block's ratings: Complete information available in the accessories section of the catalog.

1SNK161011S0201

Technical data valid for copper conductors only.

ZS4-SF1-T screw clamp terminal blocks

For 5 x 20 and 5 x 25 fuses - with test socket - 8 mm 0.315 in spacing

4 mm²
10 AWG

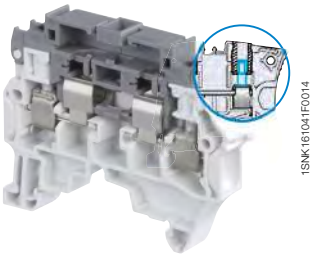

ZS4-SF1-T

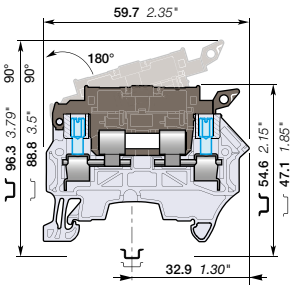

8 mm 0.315 in spacing

Description

- Protect your circuit with 5x25 and 5x20 fuse terminal blocks (fuse not supplied with the terminal blocks),
- Compliant with IEC 60947-7-3 standard,
- With built in test sockets.

Ordering details

Description		Color	Type	Part Number		Pkg qty	Weight (1 pce) g
Fuse	With 2 test sockets DIA 2 mm 0.079 in	Grey, dark grey	ZS4-SF1-T2	1SNK508411R0000		50	13.30

Main technical data

Connecting capacity		IEC	UL - CSA
1 conductor per clamp	Rigid: Solid/Stranded	0.2 ... 4 mm²	24 ... 10 AWG
	Flexible without ferrule	0.22 ... 4 mm²	
	Flexible with non insulated ferrule	0.22 ... 4 mm²	24 ... 12 AWG
	Flexible with insulated ferrule	0.22 ... 4 mm²	24 ... 12 AWG
	Gauge	A3-B3	
2 conductors per clamp	Rigid: Solid/Stranded	0.2 ... 2.5 mm²	24 ... 14 AWG
	Flexible without ferrule	0.2 ... 2.5 mm²	
	Flexible with twin ferrule	0.22 ... 2.5 mm²	24 ... 14 AWG
Rated current / Rated cross section		6.3 A / 4 mm²	10 A / 10 AWG
Rated voltage		630 V	300 V
Impulse withstand voltage		8000 V	
Protection		IP20	NEMA 1

Mounting instructions

Rail		TH 35-7.5, TH 35-15
Wire stripping length		11 mm 0.432 in
Tool		Flat screwdriver Ø 3.5 mm Ø 0.138 in
Torque		0.6 Nm ± 0.1 5.31 lb.in ± 0.885

Separate arrangement		Assembly composed of 1 fuse terminal block in between non fuse terminal blocks	Overload and short-circuit protection	2.5 W
			Exclusive short-circuit protection	4 W
Compound arrangement		Assembly composed of 5 fuse terminal blocks	Overload and short-circuit protection	1.6 W
			Exclusive short-circuit protection	4 W

The connecting capacity data for one Rigid: Solid/Stranded, or one Flexible conductor (when applicable) is a mandatory information required by IEC, UL and CSA standards (Copper conductors). All other data are provided as supplementary information only. For more details, please consult our CB, UL or CSA certificates and technical datasheet available on http://www.TE.com

CE CB RoHS USR CNR CSA EAC BV DNV Rina

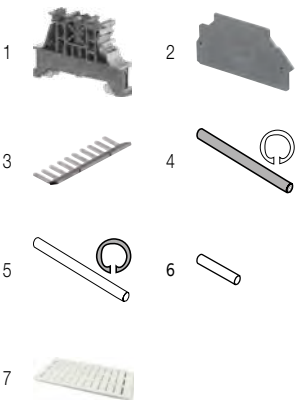

Accessories

	Description			Color	Type	Part Number		Pkg qty	Weight (1 pce) g
1	**End stops**	10 mm	0.394 in	Dark grey	BAM4	1SNK900001R0000		50	14.00
2	**End sections**	1.5 mm	0.059 in	Dark grey	ES4-SF	1SNK508960R0000		20	1.80
3	**Lateral jumper bars**	10 poles	35 A (IEC)	Grey	PC81-10	1SNA173523R1100		10	5.00
4	**Assembly rods**	2 poles			TGA8	1SNA168672R1100		10	1.00
		3 poles			TGA8	1SNA168673R1200		10	1.50
		4 poles			TGA8	1SNA168674R1300		10	2.00
5	**Spring retaining Rings**				ANT	1SNA168675R1400		10	
6	**Neutral cartridge**	5x25			CN5	1SNA179371R1600		10	3.9
7	**Terminal block markers**	Blank marker		White	MG-CPM 13 41791	1SNB041791R0612		1680	0.27
		Blank card			MC812	1SNK160000R0000		22	10.00
					MC812PA	1SNK169999R0000		20	14.00
		Universal wire markers holder		Grey	UMH	1SNK900611R0000		10	0.20

Complete list of accessories is indicated in the terminal block datasheet including end stops.
Some accessories such as jumper bars may modify the terminal block's ratings: Complete information available in the accessories section of the catalog.

1SNK161036S0201

Technical data valid for copper conductors only.

ZS4-SF1-R screw clamp terminal blocks

For 5 x 20 and 5 x 25 fuses - with blown fuse indicator - 8 mm 0.315 in spacing

4 mm²
10 AWG

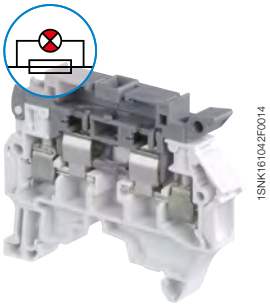

ZS4-SF1-R

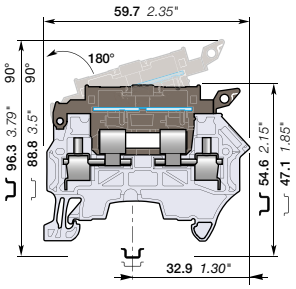

8 mm 0.315 in spacing

Description

- Protect your circuit with 5x25 and 5x20 fuse terminal blocks (fuse not supplied with the terminal blocks),
- Compliant with IEC 60947-7-3 standard,
- Quickly identify the defective circuit thanks to the blown fuse indicator (with leakage current < 0.5 mA).

Ordering details

Description		Color	Type	Part Number		Pkg qty	Weight (1 pce) g
Fuse	With blown fuse indicator 115 ... 250 V AC / DC	Grey, dark grey	ZS4-SF1-R3	1SNK508414R0000		50	13.30
	With blown fuse indicator 24 ... 110 V AC / DC		ZS4-SF1-R1	1SNK508412R0000		50	13.30

Main technical data

Connecting capacity		IEC	UL - CSA
1 conductor per clamp	Rigid: Solid/Stranded	0.2 ... 4 mm²	24 ... 10 AWG
	Flexible without ferrule	0.22 ... 4 mm²	
	Flexible with non insulated ferrule	0.22 ... 4 mm²	24 ... 12 AWG
	Flexible with insulated ferrule	0.22 ... 4 mm²	24 ... 12 AWG
	Gauge	A3-B3	
2 conductors per clamp	Rigid: Solid/Stranded	0.2 ... 2.5 mm²	24 ... 14 AWG
	Flexible without ferrule	0.2 ... 2.5 mm²	
	Flexible with twin ferrule	0.22 ... 2.5 mm²	24 ... 14 AWG
Rated current / Rated cross section		6.3 A / 4 mm²	10 A / 10 AWG
Rated voltage		630 V	300 V
Impulse withstand voltage		8000 V	
Protection		IP20	NEMA 1

Mounting instructions

Rail	TH 35-7.5, TH 35-15
Wire stripping length	11 mm 0.432 in
Tool	Flat screwdriver Ø 3.5 mm Ø 0.138 in
Torque	0.6 Nm ± 0.1 5.31 lb.in ± 0.885

Separate arrangement	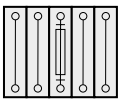	Assembly composed of 1 fuse terminal block in between non fuse terminal blocks	Overload and short-circuit protection	2.5 W
			Exclusive short-circuit protection	4 W
Compound arrangement	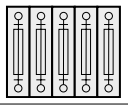	Assembly composed of 5 fuse terminal blocks	Overload and short-circuit protection	1.6 W
			Exclusive short-circuit protection	4 W

The connecting capacity data for one Rigid: Solid/Stranded, or one Flexible conductor (when applicable) is a mandatory information required by IEC, UL and CSA standards (Copper conductors). All other data are provided as supplementary information only. For more details, please consult our CB, UL or CSA certificates and technical datasheet available on http://www.TE.com

CE | CB | RoHS | USR CNR | CSA | EAC | BV | DNV | Rina

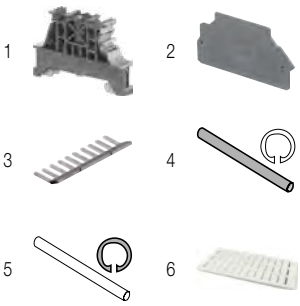

Accessories

	Description			Color	Type	Part Number		Pkg qty	Weight (1 pce) g
1	**End stops**	10 mm	0.394 in	Dark grey	BAM4	1SNK900001R0000		50	14.00
2	**End sections**	1.5 mm	0.059 in	Dark grey	ES4-SF	1SNK508960R0000		20	1.80
3	**Lateral jumper bars**	10 poles	35 A (IEC)	Grey	PC81-10	1SNA173523R1100		10	5.00
4	**Assembly rods**	2 poles			TGA8	1SNA168672R1100		10	1.00
		3 poles			TGA8	1SNA168673R1200		10	1.50
		4 poles			TGA8	1SNA168674R1300		10	2.00
5	**Spring retaining Rings**				ANT	1SNA168675R1400		10	
6	**Terminal block markers**	Blank marker		White	MG-CPM 13 41791	1SNB041791R0612		1680	0.27
		Blank card			MC812	1SNK160000R0000		22	10.00
					MC812PA	1SNK169999R0000		20	14.00
		Universal wire markers holder		Grey	UMH	1SNK900611R0000		10	0.20

Complete list of accessories is indicated in the terminal block datasheet including end stops.
Some accessories such as jumper bars may modify the terminal block's ratings: Complete information available in the accessories section of the catalog.

1SNK161034S0201

Technical data valid for copper conductors only.

ZS4-SF1-R screw clamp terminal blocks

For 5 x 20 and 5 x 25 fuses - with blown fuse indicator and test sockets - 8 mm 0.315 in spacing

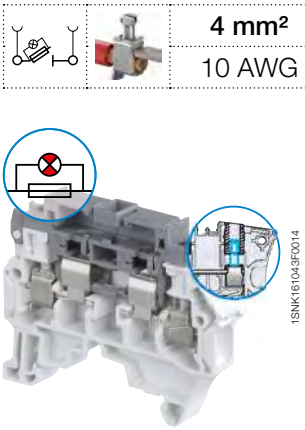

ZS4-SF1-R

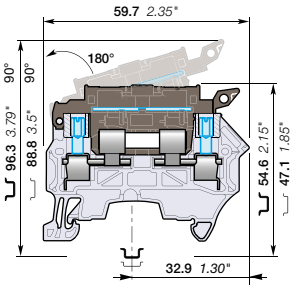

8 mm 0.315 in spacing

	4 mm²
	10 AWG

Description

- Protect your circuit with 5x25 and 5x20 fuse terminal blocks (fuse not supplied with the terminal blocks),
- Compliant with IEC 60947-7-3 standard,
- Ease the test with built-in test sockets,
- Quickly identify the defective circuit thanks to the blown fuse indicator (with leakage current < 0.5 mA).

Ordering details

Description		Color	Type	Part Number		Pkg qty	Weight (1 pce) g
Fuse	With blown fuse indicator 115 ... 250 V AC / DC and 2 test sockets DIA 2 mm 0.079 in	Grey, dark grey	ZS4-SF1-R4	1SNK508415R0000		50	13.30
	With blown fuse indicator 24 ... 110 V AC / DC and 2 test sockets DIA 2 mm 0.079 in		ZS4-SF1-R2	1SNK508413R0000		50	13.30

Main technical data

Connecting capacity		IEC	UL - CSA
1 conductor per clamp	Rigid: Solid/Stranded	0.2 ... 4 mm²	24 ... 10 AWG
	Flexible without ferrule	0.22 ... 4 mm²	
	Flexible with non insulated ferrule	0.22 ... 4 mm²	24 ... 12 AWG
	Flexible with insulated ferrule	0.22 ... 4 mm²	24 ... 12 AWG
	Gauge	A3-B3	
2 conductors per clamp	Rigid: Solid/Stranded	0.2 ... 2.5 mm²	24 ... 14 AWG
	Flexible without ferrule	0.2 ... 2.5 mm²	
	Flexible with twin ferrule	0.22 ... 2.5 mm²	24 ... 14 AWG
Rated current / Rated cross section		6.3 A / 4 mm²	10 A / 10 AWG
Rated voltage		630 V	300 V
Impulse withstand voltage		8000 V	
Protection		IP20	NEMA 1

Mounting instructions

Rail	TH 35-7.5, TH 35-15
Wire stripping length	11 mm 0.432 in
Tool	Flat screwdriver Ø 3.5 mm Ø 0.138 in
Torque	0.6 Nm ± 0.1 5.31 lb.in ± 0.885

Separate arrangement	Assembly composed of 1 fuse terminal block in between non fuse terminal blocks	Overload and short-circuit protection	2.5 W
		Exclusive short-circuit protection	4 W
Compound arrangement	Assembly composed of 5 fuse terminal blocks	Overload and short-circuit protection	1.6 W
		Exclusive short-circuit protection	4 W

The connecting capacity data for one Rigid: Solid/Stranded, or one Flexible conductor (when applicable) is a mandatory information required by IEC, UL and CSA standards (Copper conductors). All other data are provided as supplementary information only. For more details, please consult our CB, UL or CSA certificates and technical datasheet available on http://www.TE.com

CE, CB, RoHS, USR CNR, CSA, EAC, BV, DNV, Rina

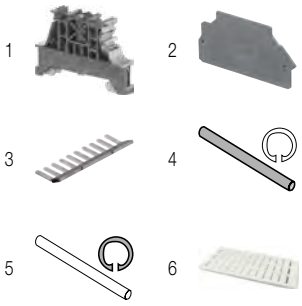

Accessories

	Description			Color	Type	Part Number		Pkg qty	Weight (1 pce) g
1	**End stops**	10 mm	0.394 in	Dark grey	BAM4	1SNK900001R0000		50	14.00
2	**End sections**	1.5 mm	0.059 in	Dark grey	ES4-SF	1SNK508960R0000		20	1.80
3	**Lateral jumper bars**	10 poles	35 A (IEC)	Grey	PC81-10	1SNA173523R1100		10	5.00
4	**Assembly rods**	2 poles			TGA8	1SNA168672R1100		10	1.00
		3 poles			TGA8	1SNA168673R1200		10	1.50
		4 poles			TGA8	1SNA168674R1300		10	2.00
5	**Spring retaining Rings**				ANT	1SNA168675R1400		10	
6	**Terminal block markers**	Blank marker		White	MG-CPM 13 41791	1SNB041791R0612		1680	0.27
		Blank card			MC812	1SNK160000R0000		22	10.00
					MC812PA	1SNK169999R0000		20	14.00
		Universal wire markers holder		Grey	UMH	1SNK900611R0000		10	0.20

Complete list of accessories is indicated in the terminal block datasheet including end stops.
Some accessories such as jumper bars may modify the terminal block's ratings: Complete information available in the accessories section of the catalog.

1SNK161035S0201

Technical data valid for copper conductors only.

ZS4-R1 screw clamp terminal blocks
Feed-through - 8 mm 0.315 in spacing

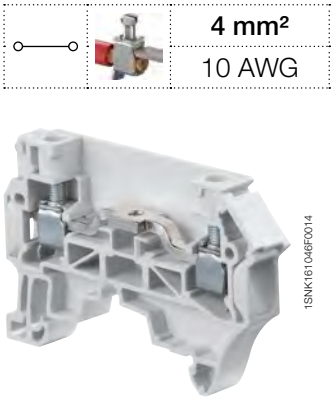

ZS4-R1

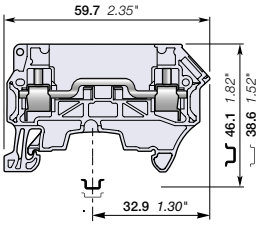

8 mm 0.315 in spacing

	4 mm²
	10 AWG

Description

Simplify the alternated feed-through and fuse circuits operations:

– With the same profile as the ZS4-SF1, the wiring of the alternated feed-through and fuse circuits is easier.

Ordering details

Description		Color	Type	Part Number		Pkg qty	Weight (1 pce) g
Feed-through	Profile aligned with ZS4-SF1	Grey	ZS4-R1	1SNK508013R0000		50	11.00

Main technical data

Connecting capacity		IEC	UL - CSA
1 conductor per clamp	Rigid: Solid/Stranded	0.2 ... 4 mm²	24 ... 10 AWG
	Flexible without ferrule	0.22 ... 4 mm²	
	Flexible with non insulated ferrule	0.22 ... 4 mm²	24 ... 12 AWG
	Flexible with insulated ferrule	0.22 ... 4 mm²	24 ... 12 AWG
	Gauge	A3-B3	
2 conductors per clamp	Rigid: Solid/Stranded	0.2 ... 2.5 mm²	24 ... 14 AWG
	Flexible without ferrule	0.2 ... 2.5 mm²	
	Flexible with twin ferrule	0.22 ... 2.5 mm²	24 ... 14 AWG
Rated current / Rated cross section		24 A / 2.5 mm²	26 A / 10 AWG
Rated short-time withstand current (1s)		300 A	
Short Circuit Current Rating (with specific conditions)			
Rated voltage		800 V	300 V
Impulse withstand voltage		6000 V	
Protection		IP20	NEMA 1

Mounting instructions

Rail	TH 35-7.5, TH 35-15
Wire stripping length	11 mm 0.432 in
Tool	Flat screwdriver Ø 3.5 mm Ø 0.138 in
Torque	0.6 Nm ± 0.1 5.31 lb.in ± 0.885

The connecting capacity data for one Rigid: Solid/Stranded, or one Flexible conductor (when applicable) is a mandatory information required by IEC, UL and CSA standards (Copper conductors). All other data are provided as supplementary information only. For more details, please consult our CB, UL or CSA certificates and technical datasheet available on http://www.TE.com

CE, CB, RoHS, USR CNR, CSA, EAC, BV, DNV, Rina

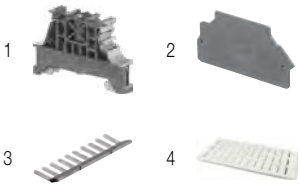

Accessories

	Description			Color	Type	Part Number		Pkg qty	Weight (1 pce) g
1	**End stops**	10 mm	0.394 in	Dark grey	BAM4	1SNK900001R0000		50	14.00
2	**End sections**	1.5 mm	0.059 in	Dark grey	ES4-SF	1SNK508960R0000		20	1.80
3	**Lateral jumper bars**	10 poles	35 A (IEC)	Grey	PC81-10	1SNA173523R1100		10	5.00
4	**Terminal block markers**	Blank marker		White	MG-CPM 13 41791	1SNB041791R0612		1680	0.27
		Blank card			MC812	1SNK160000R0000		22	10.00
					MC812PA	1SNK169999R0000		20	14.00
		Universal wire markers holder		Grey	UMH	1SNK900611R0000		10	0.20

Complete list of accessories is indicated in the terminal block datasheet including end stops.
Some accessories such as jumper bars may modify the terminal block's ratings: Complete information available in the accessories section of the catalog.

Fuse screw clamp terminal blocks

Description	Color	Type	Part Number		Pkg qty	Weight (1 pce) g
Fuse	Grey, dark grey	ZS4-SF1	1SNK508410R0000		50	13.30

1SNK161009S0201

Technical data valid for copper conductors only.

ZS4-S-R3 screw clamp terminal blocks

Disconnect with lever - 8 mm 0.315 in spacing

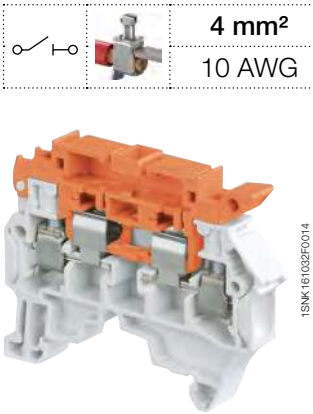

1SNK161032F0014

ZS4-S-R3

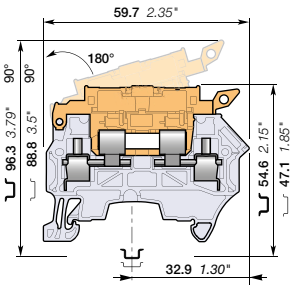

8 mm 0.315 in spacing

4 mm²
10 AWG

Description

Simplify the disconnect operations for the disconnect terminal blocks installed next to fuse terminal blocks ZS4-SF1:

- With the same profile as ZS4-SF1, the ZS4-S-R3 disconnect lever is easily operated by hand and the wiring of the alternated disconnect and fuse circuits is easier.,
- Neutral cartridge CN5 5x25 included.

Ordering details

Description		Color	Type	Part Number		Pkg qty	Weight (1 pce) g
Disconnect	Profile aligned with ZS4-SF1	Grey, orange	ZS4-S-R3	1SNK508416R0000		50	13.30
		Grey, blue	ZS4-S-R3-T2	1SNK508419R0000		50	13.30

Main technical data

Connecting capacity		IEC	UL - CSA
1 conductor per clamp	Rigid: Solid/Stranded	0.2 ... 4 mm²	24 ... 10 AWG
	Flexible without ferrule	0.22 ... 4 mm²	
	Flexible with non insulated ferrule	0.22 ... 4 mm²	24 ... 12 AWG
	Flexible with insulated ferrule	0.22 ... 4 mm²	24 ... 12 AWG
	Gauge	A3-B3	
2 conductors per clamp	Rigid: Solid/Stranded	0.2 ... 2.5 mm²	24 ... 14 AWG
	Flexible without ferrule	0.2 ... 2.5 mm²	
	Flexible with twin ferrule	0.22 ... 2.5 mm²	24 ... 14 AWG
Rated current / Rated cross section		18 A / 2.5 mm²	18 A / 10 AWG
Maximum current / Maximum cross section		18 A / 4 mm²	
Rated short-time withstand current (1s)		300 A	
Rated voltage		630 V	300 V
Impulse withstand voltage		6000 V	
Protection		IP20	NEMA 1

Mounting instructions

Rail	TH 35-7.5, TH 35-15
Wire stripping length	11 mm 0.432 in
Tool	Flat screwdriver Ø 3.5 mm Ø 0.138 in
Torque	0.6 Nm ± 0.1 5.31 lb.in ± 0.885

Recommendation for best usage: in horizontal assemblies, disconnect terminal blocks should be mounted with fixed foot on top (power side) so that the disconnect lever does not partially close through gravity. Furthermore, as specified per IEC 60947-7-1, disconnect terminal blocks are intended to be used for temporary disconnection at zero potential and at no load.

The connecting capacity data for one Rigid: Solid/Stranded, or one Flexible conductor (when applicable) is a mandatory information required by IEC, UL and CSA standards (Copper conductors). All other data are provided as supplementary information only. For more details, please consult our CB, UL or CSA certificates and technical datasheet available on http://www.TE.com

CE | RoHS | USR CNR | CSA | EAC | BV | DNV | Rina

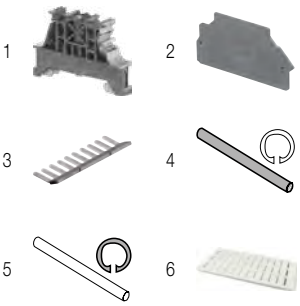

Accessories

	Description			Color	Type	Part Number		Pkg qty	Weight (1 pce) g
1	**End stops**	10 mm	0.394 in	Dark grey	BAM4	1SNK900001R0000		50	14.00
2	**End sections**	1.5 mm	0.059 in	Dark grey	ES4-SF	1SNK508960R0000		20	1.80
3	**Lateral jumper bars**	10 poles	35 A (IEC)	Grey	PC81-10	1SNA173523R1100		10	5.00
4	**Assembly rods**	2 poles			TGA8	1SNA168672R1100		10	1.00
		3 poles			TGA8	1SNA168673R1200		10	1.50
		4 poles			TGA8	1SNA168674R1300		10	2.00
5	**Spring retaining Rings**				ANT	1SNA168675R1400		10	
6	**Terminal block markers**	Blank marker		White	MG-CPM 13 41791	1SNB041791R0612		1680	0.27
		Blank card			MC812	1SNK160000R0000		22	10.00
					MC812PA	1SNK169999R0000		20	14.00
		Universal wire markers holder		Grey	UMH	1SNK900611R0000		10	0.20

Complete list of accessories is indicated in the terminal block datasheet including end stops.
Some accessories such as jumper bars may modify the terminal block's ratings: Complete information available in the accessories section of the catalog.

Fuse screw clamp terminal blocks

Description	Color	Type	Part Number		Pkg qty	Weight (1 pce) g
Fuse	Grey, dark grey	ZS4-SF1	1SNK508410R0000		50	13.30

1SNK161044S0201

Technical data valid for copper conductors only.

ZS4-SF screw clamp terminal blocks
For 5 x 20 fuses - 6 mm 0.236 in spacing

ZS4-SF

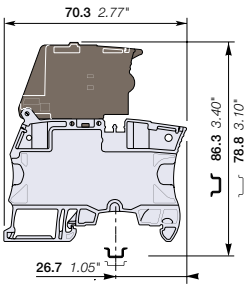

6 mm 0.236 in spacing

4 mm²
10 AWG

Description

- Protect your circuits with 5x20 fuse terminal blocks compliant with IEC 60947-7-3 standard (fuse not supplied with the terminal blocks),
- Simplify the distribution thanks to the two jumper channels aligned with ZS4 or ZS4-R2 feed-through and ZS4-S-R1 disconnect terminal blocks.

Ordering details

Description	Color	Type	Part Number		Pkg qty	Weight (1 pce) g
Fuse	Grey, dark grey	ZS4-SF	1SNK506410R0000		50	18.60

Main technical data

Connecting capacity		IEC	UL - CSA
1 conductor per clamp	Rigid: Solid/Stranded	0.2 ... 4 mm²	24 ... 10 AWG
	Flexible without ferrule	0.22 ... 4 mm²	
	Flexible with non insulated ferrule	0.22 ... 4 mm²	24 ... 12 AWG
	Flexible with insulated ferrule	0.22 ... 4 mm²	24 ... 12 AWG
	Gauge	A3-B3	
2 conductors per clamp	Rigid: Solid/Stranded	0.2 ... 1.5 mm²	24 ... 16 AWG
	Flexible without ferrule	0.2 ... 1.5 mm²	
	Flexible with twin ferrule	0.22 ... 1.5 mm²	24 ... 16 AWG
Rated current / Rated cross section		6.3 A / 4 mm²	10 A / 10 AWG
Rated voltage		500 V	150 V
Impulse withstand voltage		6000 V	
Protection		IP20	NEMA 1

Mounting instructions

Rail	TH 35-7.5, TH 35-15
Wire stripping length	10.5 mm 0.412 in
Tool	Flat screwdriver Ø 3.5 mm Ø 0.138 in
Torque	0.6 Nm ± 0.1 5.31 lb.in ± 0.885

Mount your fuse safely without touching any active part: put the fuse into the hooks of the fuse holder shutter; at the closing of the shutter, the fuse is perfectly in place in the fuse holder.

Separate arrangement		Assembly composed of 1 fuse terminal block in between non fuse terminal blocks	Overload and short-circuit protection	2.5 W
			Exclusive short-circuit protection	4 W
Compound arrangement		Assembly composed of 5 fuse terminal blocks	Overload and short-circuit protection	2.5 W
			Exclusive short-circuit protection	4 W

The connecting capacity data for one Rigid: Solid/Stranded, or one Flexible conductor (when applicable) is a mandatory information required by IEC, UL and CSA standards (Copper conductors). All other data are provided as supplementary information only. For more details, please consult our CB, UL or CSA certificates and technical datasheet available on http://www.TE.com

CE CB RoHS USR CNR CSA EAC BV DNV Rina

Accessories

	Description			Color	Type	Part Number		Pkg qty	Weight (1 pce) g
1	End stops	10 mm	0.394 in	Dark grey	BAM4	1SNK900001R0000		50	14.00
2	Jumper bars	2 poles	41 A (IEC)	Orange	JB6-2	1SNK906302R0000		50	1.30
		3 poles	41 A (IEC)		JB6-3	1SNK906303R0000		50	2.10
		4 poles	41 A (IEC)		JB6-4	1SNK906304R0000		50	2.90
		5 poles	41 A (IEC)		JB6-5	1SNK906305R0000		50	3.60
		10 poles	41 A (IEC)		JB6-10	1SNK906310R0000		20	7.40
3	Test adapters	For test plugs DIA 2 mm 0.079 in		Dark grey	TP2	1SNK900203R0000		20	1.70
		For test plugs DIA 4 mm 0.157 in			TP4	1SNK900205R0000		20	2.40
4	Test connectors	End module, 5.2 mm 0.205 in		Dark grey	TC5-R1	1SNK900201R0000		10	5.20
5	Spacers	0.8 mm	0.031 in	Dark grey	ES-TC6	1SNK900105R0000		10	0.80
6	Terminal block markers	Blank marker		White	MG-CPM 13 41791	1SNB041791R0612		1680	0.27
		Blank card			MC612	1SNK150000R0000		22	10.00
					MC612PA	1SNK159999R0000		20	11.00
		Universal wire markers holder		Grey	UMH	1SNK900611R0000		10	0.20

Complete list of accessories is indicated in the terminal block datasheet including end stops.
Some accessories such as jumper bars may modify the terminal block's ratings: Complete information available in the accessories section of the catalog.

1SNK161005S0201

Technical data valid for copper conductors only.

ZS4-SF-T screw clamp terminal blocks

For 5 x 20 fuses - with test socket - 6 mm 0.236 in spacing

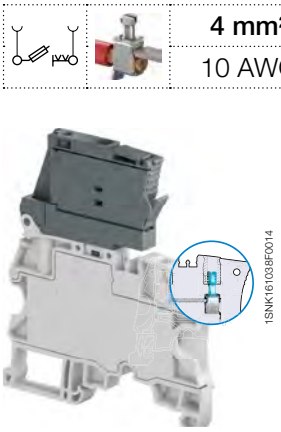

ZS4-SF-T

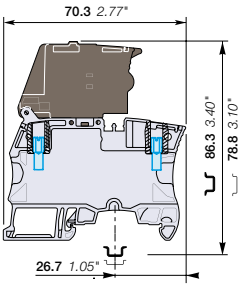

6 mm 0.236 in spacing

	4 mm²
	10 AWG

Description

- Protect your circuits with 5x20 fuse terminal blocks compliant with IEC 60947-7-3 standard (fuse not supplied with the terminal blocks),
- Simplify the distribution thanks to the two jumper channels aligned with ZS4 or ZS4-R2 feed-through and ZS4-S-R1 disconnect terminal blocks,
- Ease the test with built-in test socket screws.

Ordering details

Description		Color	Type	Part Number		Pkg qty	Weight (1 pce) g
Fuse	With 2 test sockets DIA 2 mm 0.079 in	Grey, dark grey	ZS4-SF-T2	1SNK506411R0000		50	18.60

Main technical data

Connecting capacity		IEC	UL - CSA
1 conductor per clamp	Rigid: Solid/Stranded	0.2 ... 4 mm²	24 ... 10 AWG
	Flexible without ferrule	0.22 ... 4 mm²	
	Flexible with non insulated ferrule	0.22 ... 4 mm²	24 ... 12 AWG
	Flexible with insulated ferrule	0.22 ... 4 mm²	24 ... 12 AWG
	Gauge	A3-B3	
2 conductors per clamp	Rigid: Solid/Stranded	0.2 ... 1.5 mm²	24 ... 16 AWG
	Flexible without ferrule	0.2 ... 1.5 mm²	
	Flexible with twin ferrule	0.22 ... 1.5 mm²	24 ... 16 AWG
Rated current / Rated cross section		6.3 A / 4 mm²	10 A / 10 AWG
Rated voltage		500 V	150 V
Impulse withstand voltage		6000 V	
Protection		IP20	NEMA 1

Mounting instructions

Rail	TH 35-7.5, TH 35-15
Wire stripping length	10.5 mm 0.412 in
Tool	Flat screwdriver Ø 3.5 mm Ø 0.138 in
Torque	0.6 Nm ± 0.1 5.31 lb.in ± 0.885

Mount your fuse safely without touching any active part: put the fuse into the hooks of the fuse holder shutter; at the closing of the shutter, the fuse is perfectly in place in the fuse holder.

Separate arrangement	Assembly composed of 1 fuse terminal block in between non fuse terminal blocks	Overload and short-circuit protection	2.5 W
		Exclusive short-circuit protection	4 W
Compound arrangement	Assembly composed of 5 fuse terminal blocks	Overload and short-circuit protection	2.5 W
		Exclusive short-circuit protection	4 W

The connecting capacity data for one Rigid: Solid/Stranded, or one Flexible conductor (when applicable) is a mandatory information required by IEC, UL and CSA standards (Copper conductors). All other data are provided as supplementary information only. For more details, please consult our CB, UL or CSA certificates and technical datasheet available on http://www.TE.com

CE CB RoHS USR CNR CSA EAC BV DNV Rina

Accessories

	Description			Color	Type	Part Number		Pkg qty	Weight (1 pce) g
1	**End stops**	10 mm	0.394 in	Dark grey	BAM4	1SNK900001R0000		50	14.00
2	**Jumper bars**	2 poles	41 A (IEC)	Orange	JB6-2	1SNK906302R0000		50	1.30
		3 poles	41 A (IEC)		JB6-3	1SNK906303R0000		50	2.10
		4 poles	41 A (IEC)		JB6-4	1SNK906304R0000		50	2.90
		5 poles	41 A (IEC)		JB6-5	1SNK906305R0000		50	3.60
		10 poles	41 A (IEC)		JB6-10	1SNK906310R0000		20	7.40
3	**Test connectors**	End module, 5.2 mm 0.205 in		Dark grey	TC5-R1	1SNK900201R0000		10	5.20
4	**Spacers**	0.8 mm	0.031 in	Dark grey	ES-TC6	1SNK900105R0000		10	0.80
5	**Terminal block markers**	Blank marker		White	MG-CPM 13 41791	1SNB041791R0612		1680	0.27
		Blank card			MC612	1SNK150000R0000		22	10.00
					MC612PA	1SNK159999R0000		20	11.00
		Universal wire markers holder		Grey	UMH	1SNK900611R0000		10	0.20

Complete list of accessories is indicated in the terminal block datasheet including end stops.
Some accessories such as jumper bars may modify the terminal block's ratings: Complete information available in the accessories section of the catalog.

1SNK161038S0201

Technical data valid for copper conductors only.

ZS4-SF-R screw clamp terminal blocks

For 5 x 20 fuses - with blown fuse indicator - 6 mm 0.236 in spacing

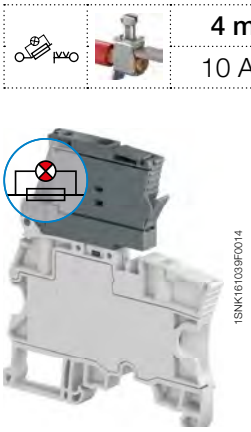

ZS4-SF-R

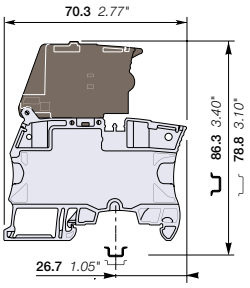

6 mm 0.236 in spacing

	4 mm²
	10 AWG

Description

- Protect your circuits with 5x20 fuse terminal blocks compliant with IEC 60947-7-3 standard (fuse not supplied with the terminal blocks),
- Simplify the distribution thanks to the two jumper channels aligned with ZS4 or ZS4-R2 feed-through and ZS4-S-R1 disconnect terminal blocks,
- Quickly identify the defective circuit thanks to the blown fuse indicator (with leakage current < 0.5 mA).

Ordering details

Description		Color	Type	Part Number		Pkg qty	Weight (1 pce) g
Fuse	With blown fuse indicator 115 ... 250 V AC / DC	Grey, dark grey	ZS4-SF-R3	1SNK506415R0000		50	18.60
	With blown fuse indicator 24 ... 110 V AC / DC		ZS4-SF-R1	1SNK506412R0000		50	18.60

Main technical data

Connecting capacity		IEC	UL - CSA
1 conductor per clamp	Rigid: Solid/Stranded	0.2 ... 4 mm²	24 ... 10 AWG
	Flexible without ferrule	0.22 ... 4 mm²	
	Flexible with non insulated ferrule	0.22 ... 4 mm²	24 ... 12 AWG
	Flexible with insulated ferrule	0.22 ... 4 mm²	24 ... 12 AWG
	Gauge	A3-B3	
2 conductors per clamp	Rigid: Solid/Stranded	0.2 ... 1.5 mm²	24 ... 16 AWG
	Flexible without ferrule	0.2 ... 1.5 mm²	
	Flexible with twin ferrule	0.22 ... 1.5 mm²	24 ... 16 AWG
Rated current / Rated cross section		6.3 A / 4 mm²	10 A / 10 AWG
Rated voltage		500 V	150 V
Impulse withstand voltage		6000 V	
Protection		IP20	NEMA 1

Mounting instructions

Rail		TH 35-7.5, TH 35-15
Wire stripping length		10.5 mm 0.412 in
Tool		Flat screwdriver Ø 3.5 mm Ø 0.138 in
Torque		0.6 Nm ± 0.1 5.31 lb.in ± 0.885

Mount your fuse safely without touching any active part: put the fuse into the hooks of the fuse holder shutter; at the closing of the shutter, the fuse is perfectly in place in the fuse holder.

Separate arrangement		Assembly composed of 1 fuse terminal block in between non fuse terminal blocks	Overload and short-circuit protection	2.5 W
			Exclusive short-circuit protection	4 W
Compound arrangement		Assembly composed of 5 fuse terminal blocks	Overload and short-circuit protection	2.5 W
			Exclusive short-circuit protection	4 W

The connecting capacity data for one Rigid: Solid/Stranded, or one Flexible conductor (when applicable) is a mandatory information required by IEC, UL and CSA standards (Copper conductors). All other data are provided as supplementary information only. For more details, please consult our CB, UL or CSA certificates and technical datasheet available on http://www.TE.com

CE, CB, RoHS, USR CNR, CSA, EAC, BV, DNV, Rina

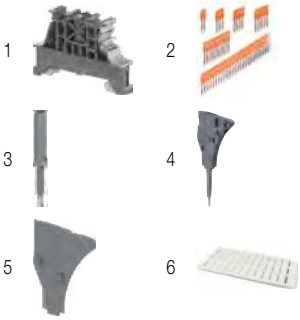

Accessories

	Description			Color	Type	Part Number		Pkg qty	Weight (1 pce) g
1	**End stops**	10 mm	0.394 in	Dark grey	BAM4	1SNK900001R0000		50	14.00
2	**Jumper bars**	2 poles	41 A (IEC)	Orange	JB6-2	1SNK906302R0000		50	1.30
		3 poles	41 A (IEC)		JB6-3	1SNK906303R0000		50	2.10
		4 poles	41 A (IEC)		JB6-4	1SNK906304R0000		50	2.90
		5 poles	41 A (IEC)		JB6-5	1SNK906305R0000		50	3.60
		10 poles	41 A (IEC)		JB6-10	1SNK906310R0000		20	7.40
3	**Test adapters**	For test plugs DIA 2 mm 0.079 in		Dark grey	TP2	1SNK900203R0000		20	1.70
		For test plugs DIA 4 mm 0.157 in			TP4	1SNK900205R0000		20	2.40
4	**Test connectors**	End module, 5.2 mm 0.205 in		Dark grey	TC5-R1	1SNK900201R0000		10	5.20
5	**Spacers**	0.8 mm	0.031 in	Dark grey	ES-TC6	1SNK900105R0000		10	0.80
6	**Terminal block markers**	Blank marker		White	MG-CPM 13 41791	1SNB041791R0612		1680	0.27
		Blank card			MC612	1SNK150000R0000		22	10.00
					MC612PA	1SNK159999R0000		20	11.00
		Universal wire markers holder		Grey	UMH	1SNK900611R0000		10	0.20

Complete list of accessories is indicated in the terminal block datasheet including end stops.
Some accessories such as jumper bars may modify the terminal block's ratings: Complete information available in the accessories section of the catalog.

1SNK161006S0201

Technical data valid for copper conductors only.

ZS4-SF-R screw clamp terminal blocks

For 5 x 20 fuses - with blown fuse indicator and test sockets - 6 mm 0.236 in spacing

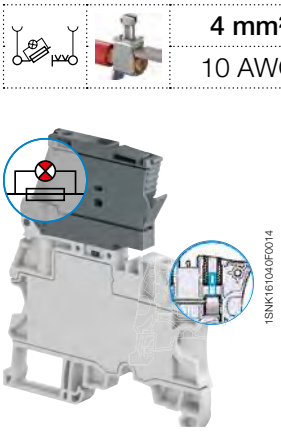

ZS4-SF-R

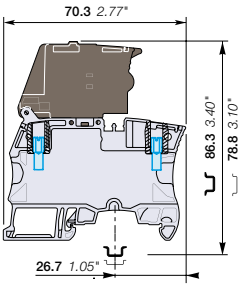

6 mm 0.236 in spacing

	4 mm²
	10 AWG

Description

- Protect your circuits with 5x20 fuse terminal blocks compliant with IEC 60947-7-3 standard (fuse not supplied with the terminal blocks),
- Simplify the distribution thanks to the two jumper channels aligned with ZS4 or ZS4-R2 feed-through and ZS4-S-R1 disconnect terminal blocks,
- Ease the test with built-in test socket screws,
- Quickly identify the defective circuit thanks to the blown fuse indicator (with leakage current < 0.5 mA).

Ordering details

Description		Color	Type	Part Number		Pkg qty	Weight (1 pce) g
Fuse	With blown fuse indicator 115 ... 250 V AC / DC and 2 test sockets DIA 2 mm 0.079 in	Grey, dark grey	ZS4-SF-R4	1SNK506416R0000		50	18.60
	With blown fuse indicator 24 ... 110 V AC / DC and 2 test sockets DIA 2 mm 0.079 in		ZS4-SF-R2	1SNK506413R0000		50	18.60

Main technical data

Connecting capacity		IEC	UL - CSA
1 conductor per clamp	Rigid: Solid/Stranded	0.2 ... 4 mm²	24 ... 10 AWG
	Flexible without ferrule	0.22 ... 4 mm²	
	Flexible with non insulated ferrule	0.22 ... 4 mm²	24 ... 12 AWG
	Flexible with insulated ferrule	0.22 ... 4 mm²	24 ... 12 AWG
	Gauge	A3-B3	
2 conductors per clamp	Rigid: Solid/Stranded	0.2 ... 1.5 mm²	24 ... 16 AWG
	Flexible without ferrule	0.2 ... 1.5 mm²	
	Flexible with twin ferrule	0.22 ... 1.5 mm²	24 ... 16 AWG
Rated current / Rated cross section		6.3 A / 4 mm²	10 A / 10 AWG
Rated voltage		500 V	150 V
Impulse withstand voltage		6000 V	
Protection		IP20	NEMA 1

Mounting instructions

Rail	TH 35-7.5, TH 35-15
Wire stripping length	10.5 mm 0.412 in
Tool	Flat screwdriver Ø 3.5 mm Ø 0.138 in
Torque	0.6 Nm ± 0.1 5.31 lb.in ± 0.885

Mount your fuse safely without touching any active part: put the fuse into the hooks of the fuse holder shutter; at the closing of the shutter, the fuse is perfectly in place in the fuse holder.

Separate arrangement		Assembly composed of 1 fuse terminal block in between non fuse terminal blocks	Overload and short-circuit protection	2.5 W
			Exclusive short-circuit protection	4 W
Compound arrangement		Assembly composed of 5 fuse terminal blocks	Overload and short-circuit protection	2.5 W
			Exclusive short-circuit protection	4 W

The connecting capacity data for one Rigid: Solid/Stranded, or one Flexible conductor (when applicable) is a mandatory information required by IEC, UL and CSA standards (Copper conductors). All other data are provided as supplementary information only. For more details, please consult our CB, UL or CSA certificates and technical datasheet available on http://www.TE.com

CE CB RoHS USR CNR CSA EAC BV DNV Rina

Accessories

	Description			Color	Type	Part Number		Pkg qty	Weight (1 pce) g
1	**End stops**	10 mm	0.394 in	Dark grey	BAM4	1SNK900001R0000		50	14.00
2	**Jumper bars**	2 poles	41 A (IEC)	Orange	JB6-2	1SNK906302R0000		50	1.30
		3 poles	41 A (IEC)		JB6-3	1SNK906303R0000		50	2.10
		4 poles	41 A (IEC)		JB6-4	1SNK906304R0000		50	2.90
		5 poles	41 A (IEC)		JB6-5	1SNK906305R0000		50	3.60
		10 poles	41 A (IEC)		JB6-10	1SNK906310R0000		20	7.40
3	**Test connectors**	End module, 5.2 mm 0.205 in		Dark grey	TC5-R1	1SNK900201R0000		10	5.20
4	**Spacers**	0.8 mm	0.031 in	Dark grey	ES-TC6	1SNK900105R0000		10	0.80
5	**Terminal block markers**	Blank marker		White	MG-CPM 13 41791	1SNB041791R0612		1680	0.27
		Blank card			MC612	1SNK150000R0000		22	10.00
					MC612PA	1SNK159999R0000		20	11.00
		Universal wire markers holder		Grey	UMH	1SNK900611R0000		10	0.20

Complete list of accessories is indicated in the terminal block datasheet including end stops.
Some accessories such as jumper bars may modify the terminal block's ratings: Complete information available in the accessories section of the catalog.

1SNK161037S0201

Technical data valid for copper conductors only.

ZS4-R2 screw clamp terminal blocks
Feed-through - 6 mm 0.236 in spacing

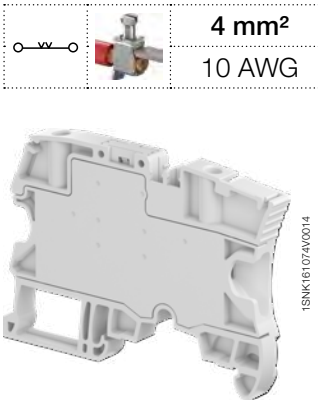

ZS4-R2

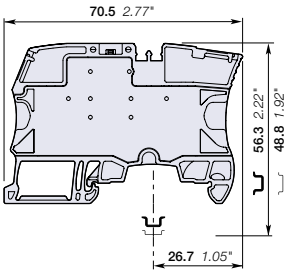

6 mm 0.236 in spacing

	4 mm²
	10 AWG

Description

- Simplify the distribution of circuits in marshalling cabinets thanks to our feed-through terminal blocks with the same profile as ZS4-SF fuse, ZS4-S-R1 disconnect and ZS4-PE-R2 ground terminal blocks: aligned conductor entries, jumper channels and marking in just 6 mm 0.236 in spacing,
- No end section needed: closed block.

Ordering details

Description		Color	Type	Part Number		Pkg qty	Weight (1 pce) g
Feed-through	Profile aligned with ZS4-SF and ZS4-S-R1	Grey	ZS4-R2	1SNK506013R0000		50	12.40

Main technical data

Connecting capacity		IEC	UL - CSA
1 conductor per clamp	Rigid: Solid/Stranded	0.2 ... 4 mm²	24 ... 10 AWG
	Flexible without ferrule	0.22 ... 4 mm²	
	Flexible with non insulated ferrule	0.22 ... 4 mm²	24 ... 12 AWG
	Flexible with insulated ferrule	0.22 ... 4 mm²	24 ... 12 AWG
	Gauge	A3-B3	
2 conductors per clamp	Rigid: Solid/Stranded	0.2 ... 1.5 mm²	24 ... 16 AWG
	Flexible without ferrule	0.2 ... 1.5 mm²	
	Flexible with twin ferrule	0.22 ... 1.5 mm²	24 ... 16 AWG
Rated current / Rated cross section		32 A / 4 mm²	30 A / 10 AWG
Rated short-time withstand current (1s)		480 A	
Rated voltage		800 V	300 V
Impulse withstand voltage		8000 V	
Protection		IP20	NEMA 1

Mounting instructions

Rail	TH 35-7.5, TH 35-15
Wire stripping length	10.5 mm 0.413 in
Tool	Flat screwdriver Ø 3.5 mm Ø 0.138 in
Torque	0.6 Nm ± 0.1 5.31 lb.in ± 0.885

The connecting capacity data for one Rigid: Solid/Stranded, or one Flexible conductor (when applicable) is a mandatory information required by IEC, UL and CSA standards (Copper conductors). All other data are provided as supplementary information only. For more details, please consult our CB, UL or CSA certificates and technical datasheet available on http://www.TE.com

CE, CB, RoHS, USR CNR, CSA, EAC, BV, DNV

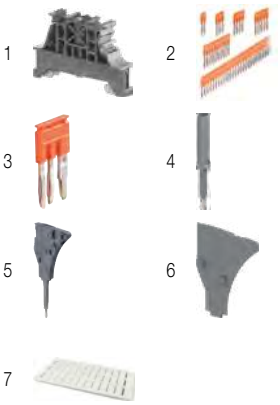

Accessories

	Description			Color	Type	Part Number		Pkg qty	Weight (1 pce) g
1	**End stops**	10 mm	0.394 in	Dark grey	BAM4	1SNK900001R0000		50	14.00
2	**Jumper bars**	2 poles	41 A (IEC)	Orange	JB6-2	1SNK906302R0000		50	1.30
		3 poles	41 A (IEC)		JB6-3	1SNK906303R0000		50	2.10
		4 poles	41 A (IEC)		JB6-4	1SNK906304R0000		50	2.90
		5 poles	41 A (IEC)		JB6-5	1SNK906305R0000		50	3.60
		10 poles	41 A (IEC)		JB6-10	1SNK906310R0000		20	7.40
3	**Cross spacing jumpers**	3 poles	32 A (IEC)	Orange	JB85-3	1SNK900603R0000		10	2.80
4	**Test adapters**	For test plugs DIA 2 mm 0.079 in		Dark grey	TP2	1SNK900203R0000		20	1.70
		For test plugs DIA 4 mm 0.157 in			TP4	1SNK900205R0000		20	2.40
5	**Test connectors**	End module, 5.2 mm 0.205 in		Dark grey	TC5-R1	1SNK900201R0000		10	5.20
6	**Spacers**	0.8 mm	0.031 in	Dark grey	ES-TC6	1SNK900105R0000		10	0.80
7	**Terminal block markers**	Blank marker		White	MG-CPM 13 41791	1SNB041791R0612		1680	0.27
		Blank card			MC612	1SNK150000R0000		22	10.00
					MC612PA	1SNK159999R0000		20	11.00
		Universal wire markers holder		Grey	UMH	1SNK900611R0000		10	0.20

Complete list of accessories is indicated in the terminal block datasheet including end stops.
Some accessories such as jumper bars may modify the terminal block's ratings: Complete information available in the accessories section of the catalog.

ZS4-SF ZS4-S-R1

Screw clamp terminal blocks

Description		Color	Type	Part Number		Pkg qty	Weight (1 pce) g
Fuse	Profile aligned with ZS4-R2 and ZS4-PE-R2	Grey, dark grey	ZS4-SF	1SNK506410R0000		50	18.60
Disconnect	Profile aligned with ZS4-R2 and ZS4-PE-R2	Grey	ZS4-S-R1	1SNK506310R0000		50	13.20

1SNK161083S0201

Technical data valid for copper conductors only.

ZS4-PE-R2 screw clamp terminal blocks
Ground - 6 mm 0.236 in spacing

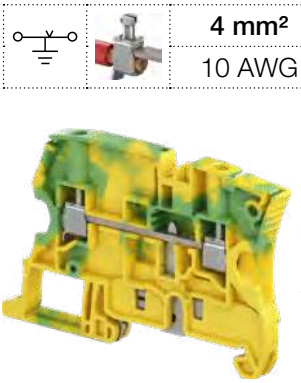

ZS4-PE-R2

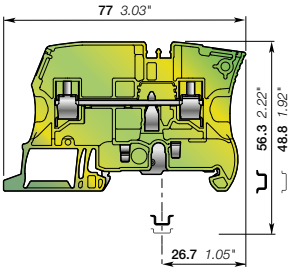

6 mm 0.236 in spacing

	4 mm²
	10 AWG

Description

Simplify the shielding connection of your analog circuits in marshalling cabinets thanks to our ground terminal blocks with the same profile as ZS4-SF fuse, ZS4-S-R1 disconnect and ZS4-R2 feed-through terminal blocks.

Ordering details

Description		Color	Type	Part Number		Pkg qty	Weight (1 pce) g
Ground	Screwless rail connection	Green-yellow	ZS4-PE-R2	1SNK506153R0000		25	15.30

Main technical data

Connecting capacity		IEC	UL - CSA
1 conductor per clamp	Rigid: Solid/Stranded	0.2 ... 4 mm²	24 ... 10 AWG
	Flexible without ferrule	0.22 ... 4 mm²	
	Flexible with non insulated ferrule	0.22 ... 4 mm²	24 ... 12 AWG
	Flexible with insulated ferrule	0.22 ... 4 mm²	24 ... 12 AWG
	Gauge	A3-B3	
Rated cross section		4 mm²	10 AWG
Rated short-time withstand current (1s)		480 A	396 A
Protection		IP20	NEMA 1

Mounting instructions

Rail	TH 35-7.5, TH 35-15
Wire stripping length	10.5 mm 0.413 in
Tool	Flat screwdriver Ø 3.5 mm Ø 0.138 in
Torque	0.6 Nm ± 0.1 5.31 lb.in ± 0.885

The connecting capacity data for one Rigid: Solid/Stranded, or one Flexible conductor (when applicable) is a mandatory information required by IEC, UL and CSA standards (Copper conductors). All other data are provided as supplementary information only. For more details, please consult our CB, UL or CSA certificates and technical datasheet available on http://www.TE.com

CE, CB, RoHS, USR CNR, CSA, EAC, BV, DNV

3

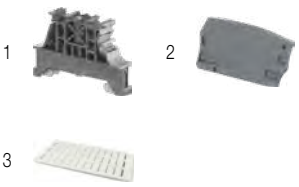

Accessories

	Description			Color	Type	Part Number		Pkg qty	Weight (1 pce) g
1	**End stops**	10 mm	0.394 in	Dark grey	BAM4	1SNK900001R0000		50	14.00
2	**End sections**	2.2 mm	0.087 in	Dark grey	ES6-4S	1SNK505911R0000		20	3.10
3	**Terminal block markers**	Blank marker		White	MG-CPM 13 41791	1SNB041791R0612		1680	0.27
		Blank card			MC612	1SNK150000R0000		22	10.00
					MC612PA	1SNK159999R0000		20	11.00
		Universal wire markers holder		Grey	UMH	1SNK900611R0000		10	0.20

Complete list of accessories is indicated in the terminal block datasheet including end stops.
Some accessories such as jumper bars may modify the terminal block's ratings: Complete information available in the accessories section of the catalog.

ZS4-SF ZS4-S-R1

Screw clamp terminal blocks

Description		Color	Type	Part Number		Pkg qty	Weight (1 pce) g
Fuse	Profile aligned with ZS4-R2 and ZS4-PE-R2	Grey, dark grey	ZS4-SF	1SNK506410R0000		50	18.60
Disconnect	Profile aligned with ZS4-R2 and ZS4-PE-R2	Grey	ZS4-S-R1	1SNK506310R0000		50	13.20

1SNK161079S0201

Technical data valid for copper conductors only.

ZS4-S-R2 screw clamp terminal blocks

Disconnect with lever - 6 mm 0.236 in spacing

4 mm²
10 AWG

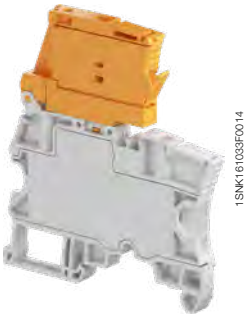

ZS4-S-R2

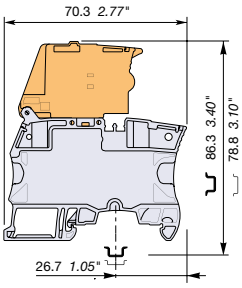

6 mm 0.236 in spacing

Description

Simplify the disconnect operations for the disconnect terminal blocks installed next to fuse terminal blocks ZS4-SF:

– With the same profile as ZS4-SF, the ZS4-S-R2 disconnect lever is easily operated by hand and the wiring of the alternated disconnect and fuse circuits is easier.

Ordering details

Description		Color	Type	Part Number		Pkg qty	Weight (1 pce) g
Disconnect	Profile aligned with ZS4-SF	Grey, orange	ZS4-S-R2	1SNK506414R0000		50	21.6

Main technical data

Connecting capacity		IEC	UL - CSA
1 conductor per clamp	Rigid: Solid/Stranded	0.2 ... 4 mm²	24 ... 10 AWG
	Flexible without ferrule	0.22 ... 4 mm²	
	Flexible with non insulated ferrule	0.22 ... 4 mm²	24 ... 12 AWG
	Flexible with insulated ferrule	0.22 ... 4 mm²	24 ... 12 AWG
	Gauge	A3-B3	
2 conductors per clamp	Rigid: Solid/Stranded	0.2 ... 1.5 mm²	24 ... 16 AWG
	Flexible without ferrule	0.2 ... 1.5 mm²	
	Flexible with twin ferrule	0.22 ... 1.5 mm²	24 ... 16 AWG
Rated current / Rated cross section		18 A / 2.5 mm²	13 A / 10 AWG
Maximum current / Maximum cross section		18 A / 4 mm²	
Rated short-time withstand current (1s)		300 A	
Rated voltage		400 V	150 V
Impulse withstand voltage		6000 V	
Protection		IP20	NEMA 1

Mounting instructions

Rail		TH 35-7.5, TH 35-15
Wire stripping length		10.5 mm 0.412 in
Tool		Flat screwdriver Ø 3.5 mm Ø 0.138 in
Torque		0.6 Nm ± 0.1 5.31 lb.in ± 0.885

Recommendation for best usage: in horizontal assemblies, disconnect terminal blocks should be mounted with fixed foot on top (power side) so that the disconnect lever does not partially close through gravity. Furthermore, as specified per IEC 60947-7-1, disconnect terminal blocks are intended to be used for temporary disconnection at zero potential and at no load.

The connecting capacity data for one Rigid: Solid/Stranded, or one Flexible conductor (when applicable) is a mandatory information required by IEC, UL and CSA standards (Copper conductors). All other data are provided as supplementary information only. For more details, please consult our CB, UL or CSA certificates and technical datasheet available on http://www.TE.com

CE | CB | RoHS | USR CNR | CSA | EAC | BV | DNV | Rina

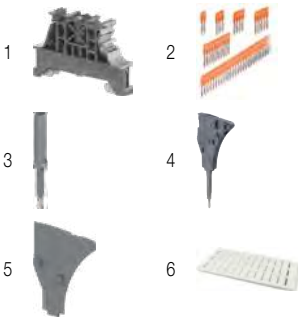

Accessories

	Description			Color	Type	Part Number		Pkg qty	Weight (1 pce) g
1	**End stops**	10 mm	0.394 in	Dark grey	BAM4	1SNK900001R0000		50	14.00
2	**Jumper bars**	2 poles	41 A (IEC)	Orange	JB6-2	1SNK906302R0000		50	1.30
		3 poles	41 A (IEC)		JB6-3	1SNK906303R0000		50	2.10
		4 poles	41 A (IEC)		JB6-4	1SNK906304R0000		50	2.90
		5 poles	41 A (IEC)		JB6-5	1SNK906305R0000		50	3.60
		10 poles	41 A (IEC)		JB6-10	1SNK906310R0000		20	7.40
3	**Test adapters**	For test plugs DIA 2 mm 0.079 in		Dark grey	TP2	1SNK900203R0000		20	1.70
		For test plugs DIA 4 mm 0.157 in			TP4	1SNK900205R0000		20	2.40
4	**Test connectors**	End module, 5.2 mm 0.205 in		Dark grey	TC5-R1	1SNK900201R0000		10	5.20
5	**Spacers**	0.8 mm	0.031 in	Dark grey	ES-TC6	1SNK900105R0000		10	0.80
6	**Terminal block markers**	Blank marker		White	MG-CPM 13 41791	1SNB041791R0612		1680	0.27
		Blank card			MC612	1SNK150000R0000		22	10.00
					MC612PA	1SNK159999R0000		20	11.00
		Universal wire markers holder		Grey	UMH	1SNK900611R0000		10	0.20

Complete list of accessories is indicated in the terminal block datasheet including end stops.
Some accessories such as jumper bars may modify the terminal block's ratings: Complete information available in the accessories section of the catalog.

Fuse screw clamp terminal blocks

Description	Color	Type	Part Number		Pkg qty	Weight (1 pce) g
Fuse	Grey, dark grey	ZS4-SF	1SNK506410R0000		50	18.60

1SNK161043S0201

Technical data valid for copper conductors only.

ZS10-SF screw clamp terminal blocks

For 6.3x32 fuses - 8 mm 0.315 in spacing

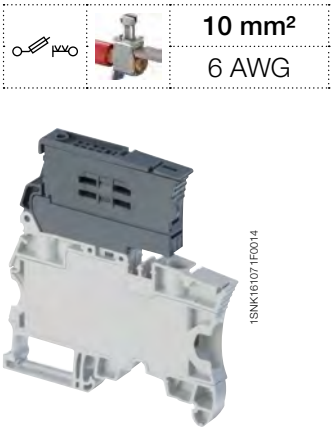

10 mm²	
6 AWG	

ZS10-SF

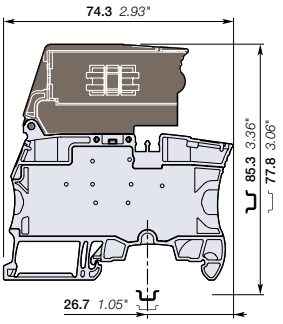

8 mm 0.315 in spacing

Description

- Protect your circuits with 6.3x32 (¼ x 1¼ in) fuse terminal blocks compliant with IEC 60947-7-3 standard (fuse not supplied with the terminal blocks),
- Simplify the distribution thanks to the two jumper channels.

Ordering details

Description		Color	Type	Part Number		Pkg qty	Weight (1 pce) g
Fuse	Closed block	Grey, dark grey	ZS10-SF	1SNK508418R0000		50	28.50

Main technical data

Connecting capacity		IEC	UL - CSA
1 conductor per clamp	Rigid: Solid/Stranded	0.5 ... 10 mm²	24 ... 6 AWG
	Flexible without ferrule	0.5 ... 10 mm²	
	Flexible with non insulated ferrule	0.5 ... 10 mm²	24 ... 8 AWG
	Flexible with insulated ferrule	0.5 ... 6 mm²	24 ... 10 AWG
	Gauge	A5-B5	
2 conductors per clamp	Rigid: Solid/Stranded	0.5 ... 4 mm²	20 ... 12 AWG
	Flexible without ferrule	0.5 ... 4 mm²	
	Flexible with twin ferrule	0.5 ... 4 mm²	20 ... 12 AWG
Rated current / Rated cross section		10 A / 10 mm²	22 A / 6 AWG
Rated voltage		630 V	600 V
Impulse withstand voltage		6000 V	
Protection		IP20	NEMA 1

Mounting instructions

Rail		TH 35-7.5, TH 35-15
Wire stripping length		13 mm 0.512 in
Tool		Flat screwdriver Ø 4 mm Ø 0.157 in
Torque		1.3 Nm ± 0.3 11.5 lb.in ± 2.65

Mount your fuse safely without touching any active part: put the fuse into the hooks of the fuse holder shutter; at the closing of the shutter, the fuse is perfectly in place in the fuse holder.

Separate arrangement		Assembly composed of 1 fuse terminal block in between non fuse terminal blocks	Overload and short-circuit protection	4 W
			Exclusive short-circuit protection	4 W
Compound arrangement		Assembly composed of 5 fuse terminal blocks	Overload and short-circuit protection	2.5 W
			Exclusive short-circuit protection	2.5 W

The connecting capacity data for one Rigid: Solid/Stranded, or one Flexible conductor (when applicable) is a mandatory information required by IEC, UL and CSA standards (Copper conductors). All other data are provided as supplementary information only. For more details, please consult our CB, UL or CSA certificates and technical datasheet available on http://www.TE.com

CE CB RoHS USR CNR CSA EAC BV DNV

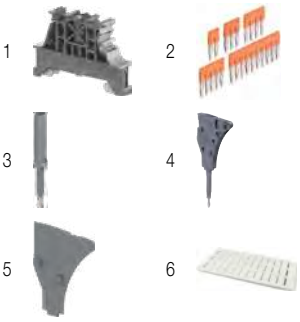

Accessories

	Description			Color	Type	Part Number		Pkg qty	Weight (1 pce) g
1	**End stops**	10 mm	0.394 in	Dark grey	BAM4	1SNK900001R0000		50	14.00
2	**Jumper bars**	2 poles	57 A (IEC)	Orange	JB8-2	1SNK908302R0000		50	2.70
		3 poles	57 A (IEC)		JB8-3	1SNK908303R0000		50	4.10
		4 poles	57 A (IEC)		JB8-4	1SNK908304R0000		50	5.60
		5 poles	57 A (IEC)		JB8-5	1SNK908305R0000		40	7.00
		10 poles	57 A (IEC)		JB8-10	1SNK908310R0000		20	14.20
3	**Test adapters**	For test plugs DIA 2 mm 0.079 in		Dark grey	TP2	1SNK900203R0000		20	1.70
		For test plugs DIA 4 mm 0.157 in			TP4	1SNK900205R0000		20	2.40
4	**Test connectors**	5.2 mm 0.205 in spacing		Dark grey	TC5	1SNK900200R0000		10	5.20
		End module, 5.2 mm 0.205 in			TC5-R1	1SNK900201R0000		10	5.20
5	**Spacers**	2.8 mm	0.110 in	Dark grey	ES-TC8	1SNK900104R0000		10	1.40
6	**Terminal block markers**	Blank marker		White	MG-CPM 13 41791	1SNB041791R0612		1680	0.27
		Blank card			MC812	1SNK160000R0000		22	10.00
					MC812PA	1SNK169999R0000		20	14.00
		Universal wire markers holder		Grey	UMH	1SNK900611R0000		10	0.20

Complete list of accessories is indicated in the terminal block datasheet including end stops.
Some accessories such as jumper bars may modify the terminal block's ratings: Complete information available in the accessories section of the catalog.

1SNK161052S0201

Technical data valid for copper conductors only.

ZS10-SF-R screw clamp terminal blocks

For 6.3x32 fuses - with blown fuse indicator - 8 mm 0.315 in spacing

ZS10-SF-R

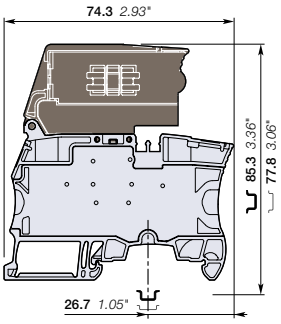

8 mm 0.315 in spacing

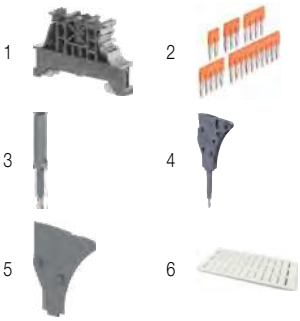

	10 mm²
	6 AWG

Description

- Protect your circuits with 6.3x32 (¼ x 1¼ in) fuse terminal blocks compliant with IEC 60947-7-3 standard (fuse not supplied with the terminal blocks),
- Quickly identify the defective circuit thanks to the blown fuse indicator (with leakage current < 0.5 mA).

Ordering details

Description		Color	Type	Part Number		Pkg qty	Weight (1 pce) g
Fuse	With blown fuse indicator 115 ... 250 V AC / DC	Grey, dark grey	ZS10-SF-R3	1SNK508422R0000		50	30.50
	With blown fuse indicator 24 ... 110 V AC / DC		ZS10-SF-R1	1SNK508421R0000		50	30.50

Main technical data

Connecting capacity		IEC	UL - CSA
1 conductor per clamp	Rigid: Solid/Stranded	0.5 ... 10 mm²	24 ... 6 AWG
	Flexible without ferrule	0.5 ... 10 mm²	
	Flexible with non insulated ferrule	0.5 ... 10 mm²	24 ... 8 AWG
	Flexible with insulated ferrule	0.5 ... 6 mm²	24 ... 10 AWG
	Gauge	A5-B5	
2 conductors per clamp	Rigid: Solid/Stranded	0.5 ... 4 mm²	20 ... 12 AWG
	Flexible without ferrule	0.5 ... 4 mm²	
	Flexible with twin ferrule	0.5 ... 4 mm²	20 ... 12 AWG
Rated current / Rated cross section		10 A / 10 mm²	22 A / 6 AWG
Rated voltage		630 V	600 V
Impulse withstand voltage		6000 V	
Protection		IP20	NEMA 1

Mounting instructions

Rail	TH 35-7.5, TH 35-15
Wire stripping length	13 mm 0.512 in
Tool	Flat screwdriver Ø 4 mm Ø 0.157 in
Torque	1.3 Nm ± 0.3 11.5 lb.in ± 2.65

Mount your fuse safely without touching any active part: put the fuse into the hooks of the fuse holder shutter; at the closing of the shutter, the fuse is perfectly in place in the fuse holder.

Separate arrangement		Assembly composed of 1 fuse terminal block in between non fuse terminal blocks	Overload and short-circuit protection	4 W
			Exclusive short-circuit protection	4 W
Compound arrangement		Assembly composed of 5 fuse terminal blocks	Overload and short-circuit protection	2.5 W
			Exclusive short-circuit protection	2.5 W

The connecting capacity data for one Rigid: Solid/Stranded, or one Flexible conductor (when applicable) is a mandatory information required by IEC, UL and CSA standards (Copper conductors). All other data are provided as supplementary information only. For more details, please consult our CB, UL or CSA certificates and technical datasheet available on http://www.TE.com

CE, CB, RoHS, USR CNR, CSA, EAC, BV, DNV

Accessories

	Description			Color	Type	Part Number		Pkg qty	Weight (1 pce) g
1	**End stops**	10 mm	0.394 in	Dark grey	BAM4	1SNK900001R0000		50	14.00
2	**Jumper bars**	2 poles	57 A (IEC)	Orange	JB8-2	1SNK908302R0000		50	2.70
		3 poles	57 A (IEC)		JB8-3	1SNK908303R0000		50	4.10
		4 poles	57 A (IEC)		JB8-4	1SNK908304R0000		50	5.60
		5 poles	57 A (IEC)		JB8-5	1SNK908305R0000		40	7.00
		10 poles	57 A (IEC)		JB8-10	1SNK908310R0000		20	14.20
3	**Test adapters**	For test plugs DIA 2 mm 0.079 in		Dark grey	TP2	1SNK900203R0000		20	1.70
		For test plugs DIA 4 mm 0.157 in			TP4	1SNK900205R0000		20	2.40
4	**Test connectors**	5.2 mm 0.205 in spacing		Dark grey	TC5	1SNK900200R0000		10	5.20
		End module, 5.2 mm 0.205 in			TC5-R1	1SNK900201R0000		10	5.20
5	**Spacers**	2.8 mm	0.110 in	Dark grey	ES-TC8	1SNK900104R0000		10	1.40
6	**Terminal block markers**	Blank marker		White	MG-CPM 13 41791	1SNB041791R0612		1680	0.27
		Blank card			MC812	1SNK160000R0000		22	10.00
					MC812PA	1SNK169999R0000		20	14.00
		Universal wire markers holder		Grey	UMH	1SNK900611R0000		10	0.20

Complete list of accessories is indicated in the terminal block datasheet including end stops.
Some accessories such as jumper bars may modify the terminal block's ratings: Complete information available in the accessories section of the catalog.

1SNK161053S0201

Technical data valid for copper conductors only.

ZS10-S-R2 screw clamp terminal blocks

Disconnect with lever - 8 mm 0.315 in spacing

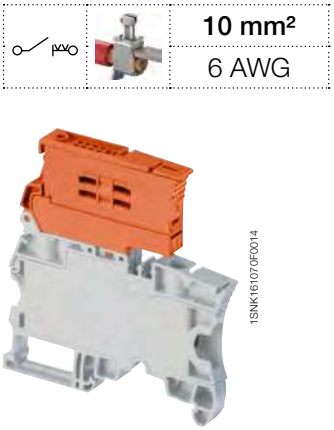

1SNK16107F0014

ZS10-S-R2

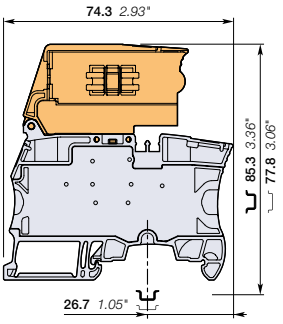

8 mm 0.315 in spacing

	10 mm²
	6 AWG

Description

Simplify the disconnect operations for the disconnect terminal blocks installed next to fuse terminal blocks ZS10-SF:

– With the same profile as ZS10-SF, the ZS10-S-R2 disconnect lever is easily operated by hand and the wiring of the alternated disconnect and fuse circuits is easier.

Ordering details

Description		Color	Type	Part Number		Pkg qty	Weight (1 pce) g
Disconnect	Profile aligned with ZS10-SF	Grey, orange	ZS10-S-R2	1SNK508417R0000		50	35.90

Main technical data

Connecting capacity		IEC	UL - CSA
1 conductor per clamp	Rigid: Solid/Stranded	0.5 ... 10 mm²	24 ... 6 AWG
	Flexible without ferrule	0.5 ... 10 mm²	
	Flexible with non insulated ferrule	0.5 ... 10 mm²	24 ... 8 AWG
	Flexible with insulated ferrule	0.5 ... 6 mm²	24 ... 10 AWG
	Gauge	A5-B5	
2 conductors per clamp	Rigid: Solid/Stranded	0.5 ... 4 mm²	20 ... 12 AWG
	Flexible without ferrule	0.5 ... 4 mm²	
	Flexible with twin ferrule	0.5 ... 4 mm²	20 ... 12 AWG
Rated current / Rated cross section		10 A / 4 mm²	22 A / 25 AWG
Maximum current / Maximum cross section		25 A / 10 mm²	
Rated short-time withstand current (1s)		480 A	
Rated voltage		630 V	600 V
Impulse withstand voltage		6000 V	
Protection		IP20	NEMA 1

Mounting instructions

Rail	TH 35-7.5, TH 35-15
Wire stripping length	13 mm 0.512 in
Tool	Flat screwdriver Ø 4 mm Ø 0.157 in
Torque	1.3 Nm ± 0.3 11.5 lb.in ± 2.65

Recommendation for best usage: in horizontal assemblies, disconnect terminal blocks should be mounted with fixed foot on top (power side) so that the disconnect lever does not partially close through gravity. Furthermore, as specified per IEC 60947-7-1, disconnect terminal blocks are intended to be used for temporary disconnection at zero potential and at no load.

The connecting capacity data for one Rigid: Solid/Stranded, or one Flexible conductor (when applicable) is a mandatory information required by IEC, UL and CSA standards (Copper conductors). All other data are provided as supplementary information only. For more details, please consult our CB, UL or CSA certificates and technical datasheet available on http://www.TE.com

CE CB RoHS USR CNR CSA EAC BV DNV

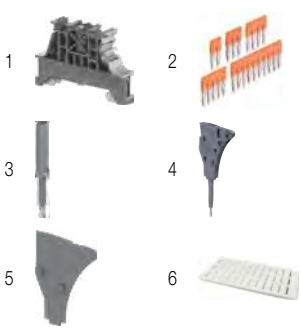

Accessories

	Description			Color	Type	Part Number		Pkg qty	Weight (1 pce) g
1	**End stops**	10 mm	0.394 in	Dark grey	BAM4	1SNK900001R0000		50	14.00
2	**Jumper bars**	2 poles	57 A (IEC)	Orange	JB8-2	1SNK908302R0000		50	2.70
		3 poles	57 A (IEC)		JB8-3	1SNK908303R0000		50	4.10
		4 poles	57 A (IEC)		JB8-4	1SNK908304R0000		50	5.60
		5 poles	57 A (IEC)		JB8-5	1SNK908305R0000		40	7.00
		10 poles	57 A (IEC)		JB8-10	1SNK908310R0000		20	14.20
3	**Test adapters**	For test plugs DIA 2 mm 0.079 in		Dark grey	TP2	1SNK900203R0000		20	1.70
		For test plugs DIA 4 mm 0.157 in			TP4	1SNK900205R0000		20	2.40
4	**Test connectors**	5.2 mm 0.205 in spacing		Dark grey	TC5	1SNK900200R0000		10	5.20
		End module, 5.2 mm 0.205 in			TC5-R1	1SNK900201R0000		10	5.20
5	**Spacers**	2.8 mm	0.110 in	Dark grey	ES-TC8	1SNK900104R0000		10	1.40
6	**Terminal block markers**	Blank marker		White	MG-CPM 13 41791	1SNB041791R0612		1680	0.27
		Blank card			MC812	1SNK160000R0000		22	10.00
					MC812PA	1SNK169999R0000		20	14.00
		Universal wire markers holder		Grey	UMH	1SNK900611R0000		10	0.20

Complete list of accessories is indicated in the terminal block datasheet including end stops.
Some accessories such as jumper bars may modify the terminal block's ratings: Complete information available in the accessories section of the catalog.

Fuse screw clamp terminal blocks

Description		Color	Type	Part Number		Pkg qty	Weight (1 pce) g
Fuse	Closed block	Grey, dark grey	ZS10-SF	1SNK508418R0000		50	28.50

1SNK161055S0201

Technical data valid for copper conductors only.

ZS4-D2 screw clamp terminal blocks

Double deck with 2 feed-through circuits - 5.2 mm 0.205 in spacing

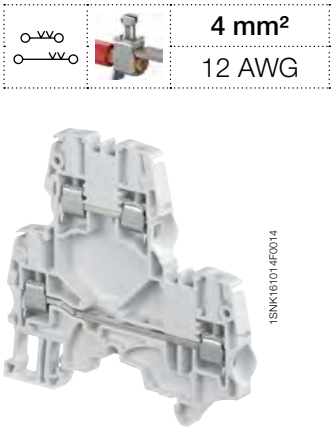

4 mm²	
12 AWG	

ZS4-D2

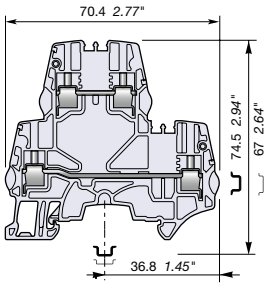

5.2 mm 0.205 in spacing

Description

- Save space with double deck terminal blocks: 2 independent circuits connected in just 5.2 mm 0.205 in spacing,
- Customize yourself the ZS4-D2 by soldering electronic components (up to 8.8 mm x 3.2 mm 0.346 x 0.125 in) in the existing linking bars punching.

Ordering details

Description		Color	Type	Part Number		Pkg qty	Weight (1 pce) g
Feed-through	2 feed-through circuits	Grey	ZS4-D2	1SNK505210R0000		50	15.30
		Blue	ZS4-D2-BL	1SNK505220R0000		50	15.30
		Orange	ZS4-D2-OR	1SNK505230R0000		50	15.30

Main technical data

Connecting capacity		IEC	UL - CSA
1 conductor per clamp	Rigid: Solid/Stranded	0.2 ... 4 mm²	24 ... 12 AWG
	Flexible without ferrule	0.22 ... 4 mm²	
	Flexible with non insulated ferrule	0.22 ... 4 mm²	24 ... 12 AWG
	Flexible with insulated ferrule	0.22 ... 2.5 mm²	24 ... 14 AWG
	Gauge	A3-B3	
2 conductors per clamp	Rigid: Solid/Stranded	0.2 ... 1.5 mm²	24 ... 16 AWG
	Flexible without ferrule	0.2 ... 1.5 mm²	
	Flexible with twin ferrule	0.22 ... 1.5 mm²	24 ... 16 AWG
Rated current / Rated cross section		29 A / 4 mm²	20 A / 12 AWG
Rated short-time withstand current (1s)		480 A	
Short Circuit Current Rating (with specific conditions)			100 kA
Rated voltage		800 V	300 V
Impulse withstand voltage		8000 V	
Protection		IP20	NEMA 1
Increased safety Ex e		440 V 29 A IEC/EN 60079-7 - IM2 II 2 GD Ex eb I/II/IIIC – 300 V 20 A UL 60079-7 - Class I, Zone 1, AEx e II, Ex e II U	

Mounting instructions

Rail	TH 35-7.5, TH 35-15
Wire stripping length	10 mm 0.393 in
Tool	Flat screwdriver Ø 3.5 mm Ø 0.138 in
Torque	0.6 Nm ± 0.1 5.31 lb.in ± 0.885

The connecting capacity data for one Rigid: Solid/Stranded, or one Flexible conductor (when applicable) is a mandatory information required by IEC, UL and CSA standards (Copper conductors). All other data are provided as supplementary information only. For more details, please consult our CB, UL or CSA certificates and technical datasheet available on http://www.TE.com

CE, CB, RoHS, USR CNR, CSA, EAC Ex, ATEX, IECEx, BR-Ex e II, Haz Loc, BV, DNV, Rina

Accessories

	Description			Color	Type	Part Number		Pkg qty	Weight (1 pce) g
1	**End stops**	10 mm	0.394 in	Dark grey	BAZH1	1SNK900102R0000		20	24.00
2	**End sections**	2.55 mm	0.100 in	Dark grey	ES4-D2	1SNK505960R0000		20	4.10
3	**Jumper bars**	2 poles	32 A (IEC)	Orange	JB5-2	1SNK905302R0000		50	1.30
		3 poles	32 A (IEC)		JB5-3	1SNK905303R0000		50	2.00
		4 poles	32 A (IEC)		JB5-4	1SNK905304R0000		50	2.70
		5 poles	32 A (IEC)		JB5-5	1SNK905305R0000		50	3.50
		10 poles	32 A (IEC)		JB5-10	1SNK905310R0000		30	7.10
4	**Test adapters**	For test plugs DIA 2 mm 0.079 in		Dark grey	TP2	1SNK900203R0000		20	1.70
		For test plugs DIA 4 mm 0.157 in			TP4	1SNK900205R0000		20	2.40
5	**Test connectors**	5.2 mm 0.205 in spacing		Dark grey	TC5	1SNK900200R0000		10	5.20
		End module, 5.2 mm 0.205 in			TC5-R1	1SNK900201R0000		10	5.20
6	**Shield connectors**				SHB	1SNK900602R0000		20	4.90
7	**Label holders**			Dark grey	LH-J	1SNK900606R0000		100	0.73
8	**Terminal block markers**	Blank marker		White	MG-CPM 13 41790	1SNB041790R0512		1960	0.23
		Blank card			MC512	1SNK140000R0000		22	9.00
					MC512PA	1SNK149999R0000		20	10.00
		Universal wire markers holder		Grey	UMH	1SNK900611R0000		10	0.20

Complete list of accessories is indicated in the terminal block datasheet including end stops.
Some accessories such as jumper bars may modify the terminal block's ratings: Complete information available in the accessories section of the catalog.

1SNK161003S0201

Technical data valid for copper conductors only.

ZS4-D1 screw clamp terminal blocks

Double deck with 1 feed-through circuit - 5.2 mm 0.205 in spacing

4 mm²	
12 AWG	

Description

- Ease one potential distribution on 4 independent screw clamps,
- Save space by connecting conductors up to 4 mm² (CB certified) 12 AWG in just 5.2 mm 0.205 in spacing.

ZS4-D1

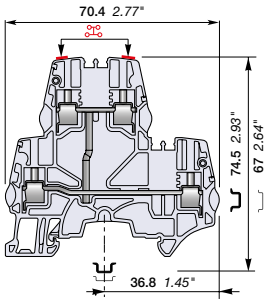

5.2 mm 0.205 in spacing

Ordering details

Description		Color	Type	Part Number		Pkg qty	Weight (1 pce) g
Feed-through	1 feed-through circuit	Grey	ZS4-D1	1SNK505211R0000		50	15.30

Main technical data

Connecting capacity		IEC	UL - CSA
1 conductor per clamp	Rigid: Solid/Stranded	0.2 ... 4 mm²	24 ... 12 AWG
	Flexible without ferrule	0.22 ... 4 mm²	
	Flexible with non insulated ferrule	0.22 ... 4 mm²	24 ... 12 AWG
	Flexible with insulated ferrule	0.22 ... 2.5 mm²	24 ... 14 AWG
	Gauge	A3-B3	
2 conductors per clamp	Rigid: Solid/Stranded	0.2 ... 1.5 mm²	24 ... 16 AWG
	Flexible without ferrule	0.2 ... 1.5 mm²	
	Flexible with twin ferrule	0.22 ... 1.5 mm²	24 ... 16 AWG
Rated current / Rated cross section		29 A / 4 mm²	20 A / 12 AWG
Rated short-time withstand current (1s)		480 A	
Short Circuit Current Rating (with specific conditions)			100 kA
Rated voltage		800 V	300 V
Impulse withstand voltage		8000 V	
Protection		IP20	NEMA 1
Increased safety Ex e		440 V 29 A IEC/EN 60079-7 - IM2 II 2 GD Ex eb I/II/IIIC – 300 V 20 A UL 60079-7 - Class I, Zone 1, AEx e II, Ex e II U	

The connecting capacity data for one Rigid: Solid/Stranded, or one Flexible conductor (when applicable) is a mandatory information required by IEC, UL and CSA standards (Copper conductors). All other data are provided as supplementary information only. For more details, please consult our CB, UL or CSA certificates and technical datasheet available on http://www.TE.com

CE, CB, RoHS, USR CNR, CSA, EAC Ex, ATEX, IECEx, BR-Ex e II, Haz Loc, BV, DNV, Rina

Mounting instructions

Rail	TH 35-7.5, TH 35-15
Wire stripping length	10 mm 0.393 in
Tool	Flat screwdriver Ø 3.5 mm Ø 0.138 in
Torque	0.6 Nm ± 0.1 5.31 lb.in ± 0.885

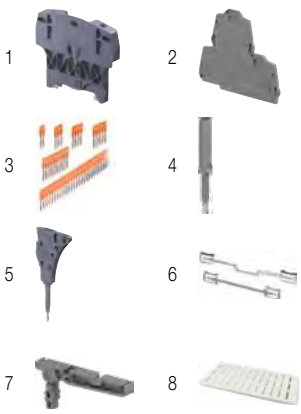

Accessories

	Description			Color	Type	Part Number		Pkg qty	Weight (1 pce) g
1	**End stops**	10 mm	0.394 in	Dark grey	BAZH1	1SNK900102R0000		20	24.00
2	**End sections**	2.55 mm	0.100 in	Dark grey	ES4-D2	1SNK505960R0000		20	4.10
3	**Jumper bars**	2 poles	32 A (IEC)	Orange	JB5-2	1SNK905302R0000		50	1.30
		3 poles	32 A (IEC)		JB5-3	1SNK905303R0000		50	2.00
		4 poles	32 A (IEC)		JB5-4	1SNK905304R0000		50	2.70
		5 poles	32 A (IEC)		JB5-5	1SNK905305R0000		50	3.50
		10 poles	32 A (IEC)		JB5-10	1SNK905310R0000		30	7.10
4	**Test adapters**	For test plugs DIA 2 mm 0.079 in		Dark grey	TP2	1SNK900203R0000		20	1.70
		For test plugs DIA 4 mm 0.157 in			TP4	1SNK900205R0000		20	2.40
5	**Test connectors**	5.2 mm 0.205 in spacing		Dark grey	TC5	1SNK900200R0000		10	5.20
		End module, 5.2 mm 0.205 in			TC5-R1	1SNK900201R0000		10	5.20
6	**Shield connectors**				SHB	1SNK900602R0000		20	4.90
7	**Label holders**			Dark grey	LH-J	1SNK900606R0000		100	0.73
8	**Terminal block markers**	Blank marker		White	MG-CPM 13 41790	1SNB041790R0512		1960	0.23
		Blank card			MC512	1SNK140000R0000		22	9.00
					MC512PA	1SNK149999R0000		20	10.00
		Universal wire markers holder		Grey	UMH	1SNK900611R0000		10	0.20

Complete list of accessories is indicated in the terminal block datasheet including end stops.
Some accessories such as jumper bars may modify the terminal block's ratings: Complete information available in the accessories section of the catalog.

1SNK161007S0201

Technical data valid for copper conductors only.

ZS6-D2 screw clamp terminal blocks

Double deck with 2 feed-through circuits - 6 mm 0.236 in spacing

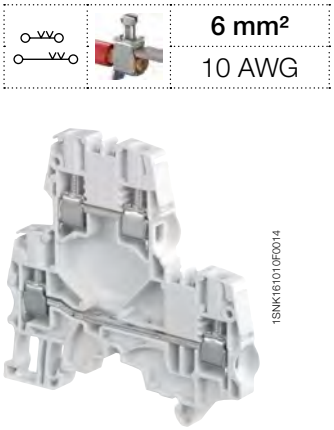

6 mm²
10 AWG

1SNK161010F0014

ZS6-D2

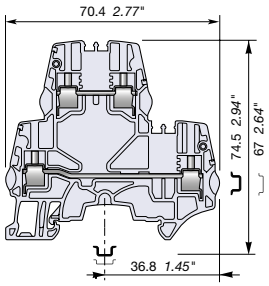

6 mm 0.236 in spacing

Description

- Save space with double deck terminal blocks: 2 independent circuits connected in just 6 mm 0.236 in spacing,
- Customize yourself the ZS6-D2 by soldering electronic components (up to 8.8 mm x 3.2 mm 0.346 x 0.125 in) in the existing linking bars punching,
- Boost the performances: ZS6-D... with ES4-D2 end section is rated 1000 V DC IEC, perfectly adapted to solar applications.

Ordering details

Description		Color	Type	Part Number		Pkg qty	Weight (1 pce) g
Feed-through	2 feed-through circuits	Grey	ZS6-D2	1SNK506210R0000		50	18.40
		Blue	ZS6-D2-BL	1SNK506220R0000		50	18.40
		Orange	ZS6-D2-OR	1SNK506230R0000		50	18.40
		Yellow	ZS6-D2-YL	1SNK506260R0000		50	18.40
		Red	ZS6-D2-RD	1SNK506262R0000		50	18.40
		White	ZS6-D2-WH	1SNK506265R0000		50	18.40
		Black	ZS6-D2-BK	1SNK506266R0000		50	18.40

Main technical data

Connecting capacity		IEC	UL - CSA
1 conductor per clamp	Rigid: Solid/Stranded	0.2 ... 6 mm²	24 ... 10 AWG
	Flexible without ferrule	0.2 ... 6 mm²	
	Flexible with non insulated ferrule	0.22 ... 4 mm²	24 ... 12 AWG
	Flexible with insulated ferrule	0.22 ... 4 mm²	24 ... 12 AWG
	Gauge	A4-B3	
2 conductors per clamp	Rigid: Solid/Stranded	0.2 ... 2.5 mm²	24 ... 14 AWG
	Flexible without ferrule	0.2 ... 2.5 mm²	
	Flexible with twin ferrule	0.22 ... 2.5 mm²	24 ... 14 AWG
Rated current / Rated cross section		40 A / 6 mm²	30 A / 10 AWG
Rated short-time withstand current (1s)		720 A	
Short Circuit Current Rating (with specific conditions)			100 kA
Rated voltage		800 V	300 V
Impulse withstand voltage		8000 V	
Protection		IP20	NEMA 1
Increased safety Ex e		440 V 40 A IEC/EN 60079-7 - IM2 II 2 GD Ex eb I/II/IIIC – 300 V 30 A UL 60079-7 - Class I, Zone 1, AEx e II, Ex e II U	

The connecting capacity data for one Rigid: Solid/Stranded, or one Flexible conductor (when applicable) is a mandatory information required by IEC, UL and CSA standards (Copper conductors). All other data are provided as supplementary information only. For more details, please consult our CB, UL or CSA certificates and technical datasheet available on http://www.TE.com

CE, CB, RoHS, USR CNR, CSA, EAC Ex, ATEX, IECEx, BR-Ex e II, Haz Loc, BV, DNV, Rina

Mounting instructions

Rail	TH 35-7.5, TH 35-15
Wire stripping length	10 mm 0.393 in
Tool	Flat screwdriver Ø 4 mm Ø 0.157 in
Torque	0.85 Nm ± 0.15 7.52 lb.in ± 1.33

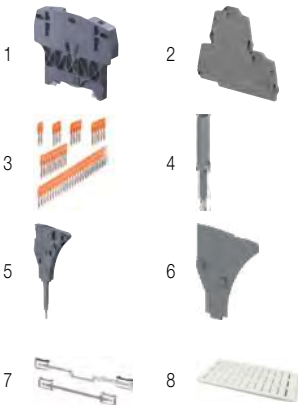

Accessories

	Description			Color	Type	Part Number		Pkg qty	Weight (1 pce) g
1	**End stops**	10 mm	0.394 in	Dark grey	BAZH1	1SNK900102R0000		20	24.00
2	**End sections**	2.55 mm	0.100 in	Dark grey	ES4-D2	1SNK505960R0000		20	4.10
3	**Jumper bars**	2 poles	41 A (IEC)	Orange	JB6-2	1SNK906302R0000		50	1.30
		3 poles	41 A (IEC)		JB6-3	1SNK906303R0000		50	2.10
		4 poles	41 A (IEC)		JB6-4	1SNK906304R0000		50	2.90
		5 poles	41 A (IEC)		JB6-5	1SNK906305R0000		50	3.60
		10 poles	41 A (IEC)		JB6-10	1SNK906310R0000		20	7.40
4	**Test adapters**	For test plugs DIA 2 mm 0.079 in		Dark grey	TP2	1SNK900203R0000		20	1.70
		For test plugs DIA 4 mm 0.157 in			TP4	1SNK900205R0000		20	2.40
5	**Test connectors**	End module, 5.2 mm 0.205 in		Dark grey	TC5-R1	1SNK900201R0000		10	5.20
6	**Spacers**	0.8 mm	0.031 in	Dark grey	ES-TC6	1SNK900105R0000		10	0.80
7	**Shield connectors**				SHB	1SNK900602R0000		20	4.90
8	**Terminal block markers**	Blank marker		White	MG-CPM 13 41791	1SNB041791R0612		1680	0.27
		Blank card			MC612	1SNK150000R0000		22	10.00
					MC612PA	1SNK159999R0000		20	11.00
		Universal wire markers holder		Grey	UMH	1SNK900611R0000		10	0.20

Complete list of accessories is indicated in the terminal block datasheet including end stops.
Some accessories such as jumper bars may modify the terminal block's ratings: Complete information available in the accessories section of the catalog.

Ground screw clamp terminal blocks

Description		Color	Type	Part Number		Pkg qty	Weight (1 pce) g
Ground	Profile aligned with ZS6-D2 and ZS6-D1	Green-yellow	ZS6-D1-PE	1SNK506250R0000		20	18.40

1SNK161014S0201

Technical data valid for copper conductors only.

ZS6-D1 screw clamp terminal blocks

Double deck with 1 feed-through circuit - 6 mm 0.236 in spacing

ZS6-D1

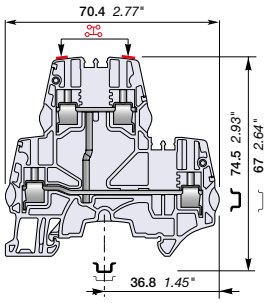

6 mm 0.236 in spacing

6 mm²
10 AWG

Description

- Ease one potential distribution on 4 independent screw clamps,
- Save space by connecting conductors up to 6 mm² 10 AWG in just 6 mm 0.236 in spacing,
- Boost the performances: ZS6-D... with ES4-D2 end section is rated 1000 V DC IEC, perfectly adapted to solar applications.

Ordering details

Description		Color	Type	Part Number		Pkg qty	Weight (1 pce) g
Feed-through	1 feed-through circuit	Grey	ZS6-D1	1SNK506211R0000		50	18.40
		Red	ZS6-D1-RD	1SNK506214R0000		50	18.40

Main technical data

Connecting capacity		IEC	UL - CSA
1 conductor per clamp	Rigid: Solid/Stranded	0.2 ... 6 mm²	24 ... 10 AWG
	Flexible without ferrule	0.2 ... 6 mm²	
	Flexible with non insulated ferrule	0.22 ... 4 mm²	24 ... 12 AWG
	Flexible with insulated ferrule	0.22 ... 4 mm²	24 ... 12 AWG
	Gauge	A4-B3	
2 conductors per clamp	Rigid: Solid/Stranded	0.2 ... 2.5 mm²	24 ... 14 AWG
	Flexible without ferrule	0.2 ... 2.5 mm²	
	Flexible with twin ferrule	0.22 ... 2.5 mm²	24 ... 14 AWG
Rated current / Rated cross section		40 A / 6 mm²	30 A / 10 AWG
Rated short-time withstand current (1s)		720 A	
Short Circuit Current Rating (with specific conditions)			100 kA
Rated voltage		800 V	300 V
Impulse withstand voltage		8000 V	
Protection		IP20	NEMA 1
Increased safety Ex e		440 V 40 A IEC/EN 60079-7 - IM2 II 2 GD Ex eb I/II/IIIC – 300 V 30 A UL 60079-7 - Class I, Zone 1, AEx e II, Ex e II U	

The connecting capacity data for one Rigid: Solid/Stranded, or one Flexible conductor (when applicable) is a mandatory information required by IEC, UL and CSA standards (Copper conductors). All other data are provided as supplementary information only. For more details, please consult our CB, UL or CSA certificates and technical datasheet available on http://www.TE.com

CE, CB, RoHS, USR CNR, CSA, EAC Ex, ATEX, IECEx, BR-Ex e II, Haz Loc, BV, DNV, Rina

Mounting instructions

Rail		TH 35-7.5, TH 35-15
Wire stripping length		10 mm 0.393 in
Tool		Flat screwdriver Ø 4 mm Ø 0.157 in
Torque		0.85 Nm ± 0.15 7.52 lb.in ± 1.33

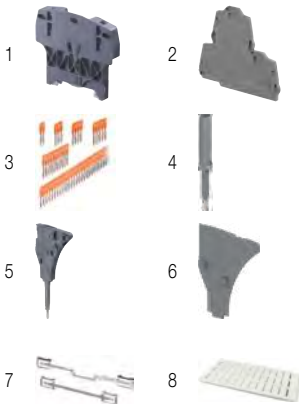

Accessories

	Description			Color	Type	Part Number		Pkg qty	Weight (1 pce) g
1	**End stops**	10 mm	0.394 in	Dark grey	BAZH1	1SNK900102R0000		20	24.00
2	**End sections**	2.55 mm	0.100 in	Dark grey	ES4-D2	1SNK505960R0000		20	4.10
3	**Jumper bars**	2 poles	41 A (IEC)	Orange	JB6-2	1SNK906302R0000		50	1.30
		3 poles	41 A (IEC)		JB6-3	1SNK906303R0000		50	2.10
		4 poles	41 A (IEC)		JB6-4	1SNK906304R0000		50	2.90
		5 poles	41 A (IEC)		JB6-5	1SNK906305R0000		50	3.60
		10 poles	41 A (IEC)		JB6-10	1SNK906310R0000		20	7.40
4	**Test adapters**	For test plugs DIA 2 mm 0.079 in		Dark grey	TP2	1SNK900203R0000		20	1.70
		For test plugs DIA 4 mm 0.157 in			TP4	1SNK900205R0000		20	2.40
5	**Test connectors**	End module, 5.2 mm 0.205 in		Dark grey	TC5-R1	1SNK900201R0000		10	5.20
6	**Spacers**	0.8 mm	0.031 in	Dark grey	ES-TC6	1SNK900105R0000		10	0.80
7	**Shield connectors**				SHB	1SNK900602R0000		20	4.90
8	**Terminal block markers**	Blank marker		White	MG-CPM 13 41791	1SNB041791R0612		1680	0.27
		Blank card			MC612	1SNK150000R0000		22	10.00
					MC612PA	1SNK159999R0000		20	11.00
		Universal wire markers holder		Grey	UMH	1SNK900611R0000		10	0.20

Complete list of accessories is indicated in the terminal block datasheet including end stops.
Some accessories such as jumper bars may modify the terminal block's ratings: Complete information available in the accessories section of the catalog.

1SNK161013S0201

Technical data valid for copper conductors only.

ZS6-D2-PE screw clamp terminal blocks

Double deck with 1 feed-through circuit and 1 ground circuit - 6 mm 0.236 in spacing

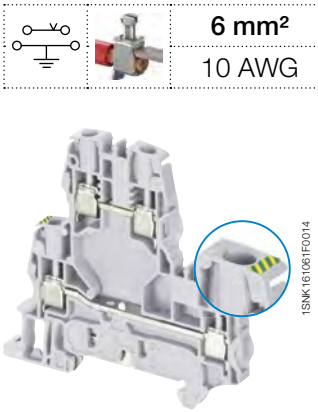

ZS6-D2-PE

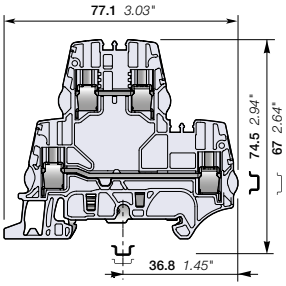

6 mm 0.236 in spacing

6 mm²
10 AWG

Description

- Save space with ZS6-D2-PE terminal blocks: 1 feed-through circuit and 1 ground circuit in just 6 mm 0.236 in spacing,
- Customize yourself the ZS6-D2-PE terminal blocks by soldering electronic components (up to 8.8 mm x 3.2 mm 0.346 x 0.125 in) in the existing linking bars punching.

Ordering details

Description		Color	Type	Part Number		Pkg qty	Weight (1 pce) g
Feed-through + ground	1 feed-through circuit and 1 ground circuit	Grey	ZS6-D2-PE	1SNK506212R0000		50	18.40

Main technical data

Connecting capacity		IEC	UL - CSA
1 conductor per clamp	Rigid: Solid/Stranded	0.2 ... 6 mm²	24 ... 10 AWG
	Flexible without ferrule	0.22 ... 6 mm²	
	Flexible with non insulated ferrule	0.22 ... 4 mm²	24 ... 12 AWG
	Flexible with insulated ferrule	0.22 ... 4 mm²	24 ... 12 AWG
	Gauge	A4-B3	
2 conductors per clamp	Rigid: Solid/Stranded	0.2 ... 2.5 mm²	24 ... 14 AWG
	Flexible without ferrule	0.2 ... 2.5 mm²	
	Flexible with twin ferrule	0.22 ... 2.5 mm²	24 ... 14 AWG
Rated current / Rated cross section		41 A / 6 mm²	30 A / 10 AWG
Rated short-time withstand current (1s)		720 A	
Short Circuit Current Rating (with specific conditions)			
Rated voltage		800 V	300 V
Impulse withstand voltage		8000 V	
Protection		IP20	NEMA 1

Mounting instructions

Rail	TH 35-7.5, TH 35-15
Wire stripping length	10 mm 0.393 in
Tool	Flat screwdriver Ø 4 mm Ø 0.157 in
Torque	0.85 Nm ± 0.15 7.52 lb.in ± 1.33

The connecting capacity data for one Rigid: Solid/Stranded, or one Flexible conductor (when applicable) is a mandatory information required by IEC, UL and CSA standards (Copper conductors). All other data are provided as supplementary information only. For more details, please consult our CB, UL or CSA certificates and technical datasheet available on http://www.TE.com

CE CB RoHS USR CSA EAC BV DNV

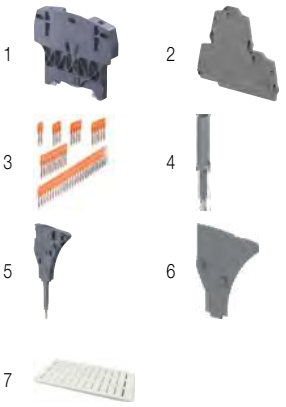

Accessories

	Description			Color	Type	Part Number		Pkg qty	Weight (1 pce) g
1	**End stops**	10 mm	0.394 in	Dark grey	BAZH1	1SNK900102R0000		20	24.00
2	**End sections**	2.55 mm	0.100 in	Dark grey	ES4-D2	1SNK505960R0000		20	4.10
3	**Jumper bars**	2 poles	41 A (IEC)	Orange	JB6-2	1SNK906302R0000		50	1.30
		3 poles	41 A (IEC)		JB6-3	1SNK906303R0000		50	2.10
		4 poles	41 A (IEC)		JB6-4	1SNK906304R0000		50	2.90
		5 poles	41 A (IEC)		JB6-5	1SNK906305R0000		50	3.60
		10 poles	41 A (IEC)		JB6-10	1SNK906310R0000		20	7.40
4	**Test adapters**	For test plugs DIA 4 mm 0.157 in		Dark grey	TP4	1SNK900205R0000		20	2.40
5	**Test connectors**	End module, 5.2 mm 0.205 in		Dark grey	TC5-R1	1SNK900201R0000		10	5.20
6	**Spacers**	0.8 mm	0.031 in	Dark grey	ES-TC6	1SNK900105R0000		10	0.80
7	**Terminal block markers**	Blank marker		White	MG-CPM 13 41791	1SNB041791R0612		1680	0.27
		Blank card			MC612	1SNK150000R0000		22	10.00
					MC612PA	1SNK159999R0000		20	11.00
		Universal wire markers holder		Grey	UMH	1SNK900611R0000		10	0.20

Complete list of accessories is indicated in the terminal block datasheet including end stops.
Some accessories such as jumper bars may modify the terminal block's ratings: Complete information available in the accessories section of the catalog.

Feed-through screw clamp terminal blocks

Description		Color	Type	Part Number		Pkg qty	Weight (1 pce) g
Feed-through	2 feed-through circuits	Grey	ZS6-D2	1SNK506210R0000		50	18.40

1SNK161048S0201

Technical data valid for copper conductors only.

ZS6-D1-PE screw clamp terminal blocks

Double deck with 1 ground circuit - 6 mm 0.236 in spacing

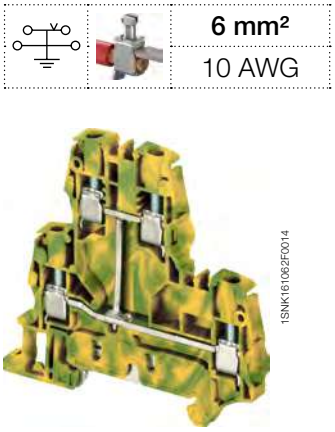

6 mm²	
10 AWG	

1SNK161062F0014

ZS6-D1-PE

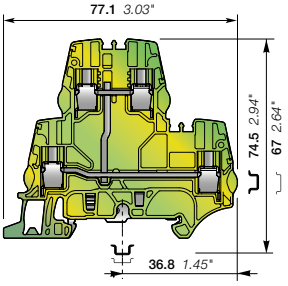

6 mm 0.236 in spacing

Description

- Save space with double deck ground terminal blocks aligned with ZS6-D2 double deck terminal blocks for convenient cabling process and circuit configuration,
- Benefit from our screwless rail connection: non operator independant, secured snap on or remove from the rail, performances above the requirements of IEC 60947-7-2 standard.

Ordering details

Description		Color	Type	Part Number		Pkg qty	Weight (1 pce) g
Ground	1 ground circuit	Green-yellow	ZS6-D1-PE	1SNK506250R0000		20	18.40

Main technical data

Connecting capacity		IEC	UL - CSA
1 conductor per clamp	Rigid: Solid/Stranded	0.2 ... 6 mm²	24 ... 10 AWG
	Flexible without ferrule	0.22 ... 6 mm²	
	Flexible with non insulated ferrule	0.22 ... 4 mm²	24 ... 12 AWG
	Flexible with insulated ferrule	0.22 ... 4 mm²	24 ... 12 AWG
	Gauge	A4-B3	
Rated cross section		6 mm²	10 AWG
Rated short-time withstand current (1s)		720 A	
Protection		IP20	NEMA 1

Mounting instructions

Rail	TH 35-7.5, TH 35-15
Wire stripping length	10 mm 0.393 in
Tool	Flat screwdriver Ø 4 mm Ø 0.157 in
Torque	0.85 Nm ± 0.15 7.52 lb.in ± 1.33

The connecting capacity data for one Rigid: Solid/Stranded, or one Flexible conductor (when applicable) is a mandatory information required by IEC, UL and CSA standards (Copper conductors). All other data are provided as supplementary information only. For more details, please consult our CB, UL or CSA certificates and technical datasheet available on http://www.TE.com

CE CB RoHS USR CSA EAC BV DNV

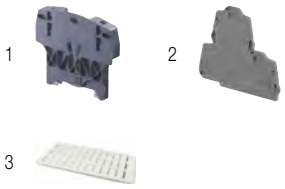

Accessories

	Description			Color	Type	Part Number		Pkg qty	Weight (1 pce) g
1	**End stops**	10 mm	0.394 in	Dark grey	BAZH1	1SNK900102R0000		20	24.00
2	**End sections**	2.55 mm	0.100 in	Dark grey	ES4-D2	1SNK505960R0000		20	4.10
3	**Terminal block markers**	Blank marker		White	MG-CPM 13 41791	1SNB041791R0612		1680	0.27
		Blank card			MC612	1SNK150000R0000		22	10.00
					MC612PA	1SNK159999R0000		20	11.00
		Universal wire markers holder		Grey	UMH	1SNK900611R0000		10	0.20

Complete list of accessories is indicated in the terminal block datasheet including end stops.
Some accessories such as jumper bars may modify the terminal block's ratings: Complete information available in the accessories section of the catalog.

1SNK161049S0201

Technical data valid for copper conductors only.

ZS4-D2-S screw clamp terminal blocks

Double deck with 1 disconnect circuit and 1 feed-through circuit - 5.2 mm 0.205 in spacing

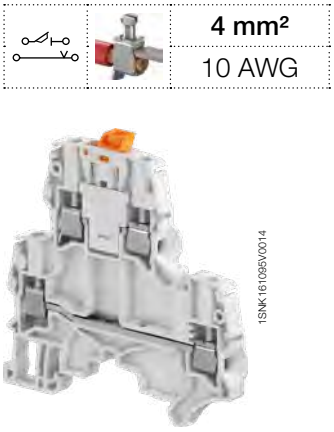

4 mm²	
10 AWG	

ZS4-D2-S

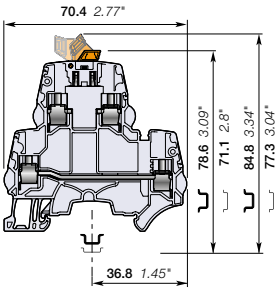

5.2 mm 0.205 in spacing

Description

- Save space: connect one complete circuit on a single block featuring disconnect and feed-through for the return circuit in just 5.2 mm 0.205 in spacing,
- Same profile as ZS4-D... double deck terminal blocks: convenient cabling process, aligned jumpers, markers and common end section.

Ordering details

Description		Color	Type	Part Number		Pkg qty	Weight (1 pce) g
Feed-through + disconnect	1 disconnect circuit and 1 feed-through circuit	Grey	ZS4-D2-S	1SNK505315R0000		50	15.90

Main technical data

Connecting capacity		IEC	UL - CSA
1 conductor per clamp	Rigid: Solid/Stranded	0.2 ... 4 mm²	24 ... 10 AWG
	Flexible without ferrule	0.22 ... 4 mm²	
	Flexible with non insulated ferrule	0.22 ... 4 mm²	24 ... 12 AWG
	Flexible with insulated ferrule	0.22 ... 2.5 mm²	24 ... 14 AWG
	Gauge	A3-B3	
2 conductors per clamp	Rigid: Solid/Stranded	0.2 ... 1.5 mm²	24 ... 16 AWG
	Flexible without ferrule	0.2 ... 1.5 mm²	
	Flexible with twin ferrule	0.22 ... 1.5 mm²	24 ... 16 AWG
Disconnect circuit			
Rated current / Rated cross section		25 A / 4 mm²	27 A / 10 AWG
Feed-through circuit			
Rated current / Rated cross section		29 A / 4 mm²	27 A / 10 AWG
Rated short-time withstand current (1s)		480 A	
Rated voltage		630 V	300 V
Impulse withstand voltage		8000 V	
Protection		IP20	NEMA 1

Mounting instructions

Rail		TH 35-7.5, TH 35-15
Wire stripping length		10.5 mm 0.413 in
Tool		Flat screwdriver Ø 3.5 mm Ø 0.138 in
Torque		0.6 Nm ± 0.1 5.31 lb.in ± 0.885

Recommendation for best usage: in horizontal assemblies, disconnect terminal blocks should be mounted with fixed foot on top (power side) so that the disconnect knife does not partially close through gravity. Furthermore, as specified per IEC 60947-7-1, disconnect terminal blocks are intended to be used for temporary disconnection at zero potential and at no load.

The connecting capacity data for one Rigid: Solid/Stranded, or one Flexible conductor (when applicable) is a mandatory information required by IEC, UL and CSA standards (Copper conductors). All other data are provided as supplementary information only. For more details, please consult our CB, UL or CSA certificates and technical datasheet available on http://www.TE.com

CE CB RoHS USR CSA EAC BV DNV

Accessories

	Description			Color	Type	Part Number		Pkg qty	Weight (1 pce) g
1	**End stops**	10 mm	0.394 in	Dark grey	BAZH1	1SNK900102R0000		20	24.00
2	**End sections**	2.55 mm	0.100 in	Dark grey	ES4-D2	1SNK505960R0000		20	4.10
3	**Jumper bars**	2 poles	32 A (IEC)	Orange	JB5-2	1SNK905302R0000		50	1.30
		3 poles	32 A (IEC)		JB5-3	1SNK905303R0000		50	2.00
		4 poles	32 A (IEC)		JB5-4	1SNK905304R0000		50	2.70
		5 poles	32 A (IEC)		JB5-5	1SNK905305R0000		50	3.50
		10 poles	32 A (IEC)		JB5-10	1SNK905310R0000		30	7.10
		50 poles	32 A (IEC)		JB5-50	1SNK905350R0000		10	36.00
4	**Test adapters**	For test plugs DIA 2 mm 0.079 in		Dark grey	TP2	1SNK900203R0000		20	1.70
		For test plugs DIA 4 mm 0.157 in			TP4	1SNK900205R0000		20	2.40
5	**Shield connectors**				SHB	1SNK900602R0000		20	4.90
6	**Terminal block markers**	Blank marker		White	MG-CPM 13 41790	1SNB041790R0512		1960	0.23
		Blank card			MC512	1SNK140000R0000		22	9.00
					MC512PA	1SNK149999R0000		20	10.00
		Universal wire markers holder		Grey	UMH	1SNK900611R0000		10	0.20

Complete list of accessories is indicated in the terminal block datasheet including end stops.
Some accessories such as jumper bars may modify the terminal block's ratings: Complete information available in the accessories section of the catalog.

1SNK161074S0201

Technical data valid for copper conductors only.

ZS4-D2-S-T screw clamp terminal blocks

Double deck with 1 disconnect circuit with test socket screws and 1 feed-through circuit - 5.2 mm 0.205 in spacing

4 mm²
10 AWG

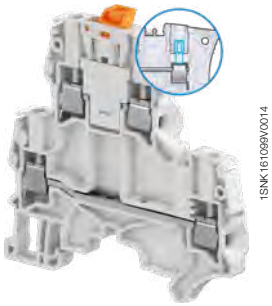

ZS4-D2-S-T

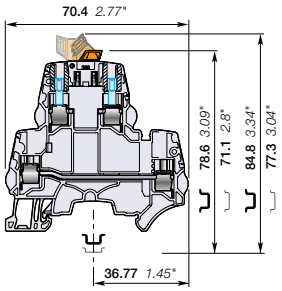

5.2 mm 0.205 in spacing

Description

Find the same functionalities as ZS4-D2-S, upgraded with the two built-in test socket screws meant to ease your signal testing during commissioning and maintenance.

Ordering details

Description		Color	Type	Part Number		Pkg qty	Weight (1 pce) g
Feed-through + disconnect	1 disconnect circuit with 2 test socket screws and 1 feed-through circuit	Grey	ZS4-D2-S-T2	1SNK505316R0000		50	16.20

Main technical data

Connecting capacity		IEC	UL - CSA
1 conductor per clamp	Rigid: Solid/Stranded	0.2 ... 4 mm²	24 ... 10 AWG
	Flexible without ferrule	0.22 ... 4 mm²	
	Flexible with non insulated ferrule	0.22 ... 4 mm²	24 ... 12 AWG
	Flexible with insulated ferrule	0.22 ... 2.5 mm²	24 ... 14 AWG
	Gauge	A3-B3	
2 conductors per clamp	Rigid: Solid/Stranded	0.2 ... 1.5 mm²	24 ... 16 AWG
	Flexible without ferrule	0.2 ... 1.5 mm²	
	Flexible with twin ferrule	0.22 ... 1.5 mm²	24 ... 16 AWG
Disconnect circuit			
Rated current / Rated cross section		25 A / 4 mm²	27 A / 10 AWG
Feed-through circuit			
Rated current / Rated cross section		29 A / 4 mm²	27 A / 10 AWG
Rated short-time withstand current (1s)		480 A	
Rated voltage		630 V	300 V
Impulse withstand voltage		8000 V	
Protection		IP20	NEMA 1

Mounting instructions

Rail		TH 35-7.5, TH 35-15
Wire stripping length		10.5 mm 0.413 in
Tool		Flat screwdriver Ø 3.5 mm Ø 0.138 in
Torque		0.6 Nm ± 0.1 5.31 lb.in ± 0.885

Recommendation for best usage: in horizontal assemblies, disconnect terminal blocks should be mounted with fixed foot on top (power side) so that the disconnect knife does not partially close through gravity. Furthermore, as specified per IEC 60947-7-1, disconnect terminal blocks are intended to be used for temporary disconnection at zero potential and at no load.

The connecting capacity data for one Rigid: Solid/Stranded, or one Flexible conductor (when applicable) is a mandatory information required by IEC, UL and CSA standards (Copper conductors). All other data are provided as supplementary information only. For more details, please consult our CB, UL or CSA certificates and technical datasheet available on http://www.TE.com

CE | CB | RoHS | USR | CSA | EAC | BV | DNV

Accessories

	Description			Color	Type	Part Number		Pkg qty	Weight (1 pce) g
1	**End stops**	10 mm	0.394 in	Dark grey	BAZH1	1SNK900102R0000		20	24.00
2	**End sections**	2.55 mm	0.100 in	Dark grey	ES4-D2	1SNK505960R0000		20	4.10
3	**Jumper bars**	2 poles	32 A (IEC)	Orange	JB5-2	1SNK905302R0000		50	1.30
		3 poles	32 A (IEC)		JB5-3	1SNK905303R0000		50	2.00
		4 poles	32 A (IEC)		JB5-4	1SNK905304R0000		50	2.70
		5 poles	32 A (IEC)		JB5-5	1SNK905305R0000		50	3.50
		10 poles	32 A (IEC)		JB5-10	1SNK905310R0000		30	7.10
		50 poles	32 A (IEC)		JB5-50	1SNK905350R0000		10	36.00
4	**Test adapters**	For test plugs DIA 2 mm 0.079 in		Dark grey	TP2	1SNK900203R0000		20	1.70
		For test plugs DIA 4 mm 0.157 in			TP4	1SNK900205R0000		20	2.40
5	**Shield connectors**				SHB	1SNK900602R0000		20	4.90
6	**Terminal block markers**	Blank marker		White	MG-CPM 13 41790	1SNB041790R0512		1960	0.23
		Blank card			MC512	1SNK140000R0000		22	9.00
					MC512PA	1SNK149999R0000		20	10.00
		Universal wire markers holder		Grey	UMH	1SNK900611R0000		10	0.20

Complete list of accessories is indicated in the terminal block datasheet including end stops.
Some accessories such as jumper bars may modify the terminal block's ratings: Complete information available in the accessories section of the catalog.

1SNK161075S0201

Technical data valid for copper conductors only.

ZS4-D2-SF1 screw clamp terminal blocks

Double deck with 1 fuse circuit and 1 feed-through circuit - 8 mm 0.315 in spacing

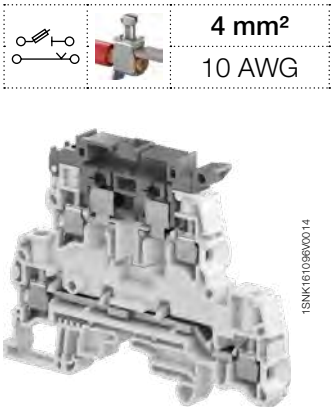

4 mm²
10 AWG

ZS4-D2-SF1

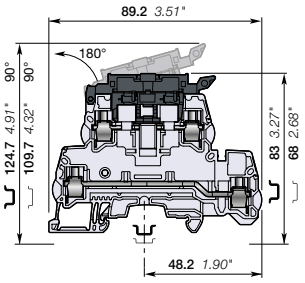

8 mm 0.315 in spacing

Description

- Save space: connect one complete circuit on a single block featuring fuse and feed-through for the return circuit,
- Protect your circuit with either 5X20 or 5X25 fuse (fuse not supplied with the terminal blocks),
- High performances product: compliant with IEC 60947-7-3 standard and jumper channel for the feed-through circuit.

Ordering details

Description		Color	Type	Part Number		Pkg qty	Weight (1 pce) g
Feed-through + fuse	1 fuse circuit and 1 feed-through circuit	Grey, dark grey	ZS4-D2-SF1	1SNK508425R0000		50	27.50

Main technical data

Connecting capacity		IEC	UL - CSA
1 conductor per clamp	Rigid: Solid/Stranded	0.2 ... 6 mm²	24 ... 10 AWG
	Flexible without ferrule	0.22 ... 4 mm²	
	Flexible with non insulated ferrule	0.22 ... 4 mm²	24 ... 12 AWG
	Flexible with insulated ferrule	0.22 ... 4 mm²	24 ... 12 AWG
	Gauge	A3-B3	
2 conductors per clamp	Rigid: Solid/Stranded	0.2 ... 2.5 mm²	24 ... 14 AWG
	Flexible without ferrule	0.2 ... 2.5 mm²	
	Flexible with twin ferrule	0.22 ... 2.5 mm²	24 ... 14 AWG
Disconnect circuit Rated current / Rated cross section		6.3 A / 4 mm²	12 A / 10 AWG
Feed-through circuit Rated current / Rated cross section		32 A / 4 mm²	30 A / 10 AWG
Rated voltage		800 V	300 V
Impulse withstand voltage		8000 V	
Protection		IP20	NEMA 1

Mounting instructions

Rail	TH 35-7.5, TH 35-15
Wire stripping length	11 mm 0.433 in
Tool	Flat screwdriver Ø 3.5 mm Ø 0.138 in
Torque	0.6 Nm ± 0.1 5.31 lb.in ± 0.885

Separate arrangement		Assembly composed of 1 fuse terminal block in between non fuse terminal blocks	Overload and short-circuit protection	2.5 W
			Exclusive short-circuit protection	4 W
Compound arrangement		Assembly composed of 5 fuse terminal blocks	Overload and short-circuit protection	1.6 W
			Exclusive short-circuit protection	4 W

The connecting capacity data for one Rigid: Solid/Stranded, or one Flexible conductor (when applicable) is a mandatory information required by IEC, UL and CSA standards (Copper conductors). All other data are provided as supplementary information only. For more details, please consult our CB, UL or CSA certificates and technical datasheet available on http://www.TE.com

CE CB RoHS USR CSA EAC BV DNV

Accessories

	Description			Color	Type	Part Number		Pkg qty	Weight (1 pce) g
1	**End stops**	10 mm	0.394 in	Dark grey	BAZH1	1SNK900102R0000		20	24.00
2	**End sections**	2.5 mm	0.098 in	Dark grey	ES4-D2-SF1	1SNK508911R0000		20	5.00
3	**Jumper bars**	2 poles	57 A (IEC)	Orange	JB8-2	1SNK908302R0000		50	2.70
		3 poles	57 A (IEC)		JB8-3	1SNK908303R0000		50	4.10
		4 poles	57 A (IEC)		JB8-4	1SNK908304R0000		50	5.60
		5 poles	57 A (IEC)		JB8-5	1SNK908305R0000		40	7.00
		10 poles	57 A (IEC)		JB8-10	1SNK908310R0000		20	14.20
4	**Lateral jumper bars**	10 poles	35 A (IEC)	Grey	PC81-10	1SNA173523R1100		10	5.00
5	**Test adapters**	For test plugs DIA 2 mm 0.079 in		Dark grey	TP2	1SNK900203R0000		20	1.70
		For test plugs DIA 4 mm 0.157 in			TP4	1SNK900205R0000		20	2.40
6	**Test connectors**	5.2 mm 0.205 in spacing		Dark grey	TC5	1SNK900200R0000		10	5.20
		End module, 5.2 mm 0.205 in			TC5-R1	1SNK900201R0000		10	5.20
7	**Spacers**	2.8 mm	0.110 in	Dark grey	ES-TC8	1SNK900104R0000		10	1.40
8	**Assembly rods**	2 poles			TGA8	1SNA168672R1100		10	1.00
		3 poles			TGA8	1SNA168673R1200		10	1.50
		4 poles			TGA8	1SNA168674R1300		10	2.00
9	**Terminal block markers**	Blank marker		White	MG-CPM 13 41791	1SNB041791R0612		1680	0.27
		Blank card			MC812	1SNK160000R0000		22	10.00
					MC812PA	1SNK169999R0000		20	14.00
		Universal wire markers holder		Grey	UMH	1SNK900611R0000		10	0.20

Complete list of accessories is indicated in the terminal block datasheet including end stops.
Some accessories such as jumper bars may modify the terminal block's ratings: Complete information available in the accessories section of the catalog.

1SNK161076S0201

Technical data valid for copper conductors only.

ZS4-D2-SF1-R screw clamp terminal blocks

Double deck with 1 fuse circuit with blown fuse indicator and 1 feed-through circuit - 8 mm 0.315 in spacing

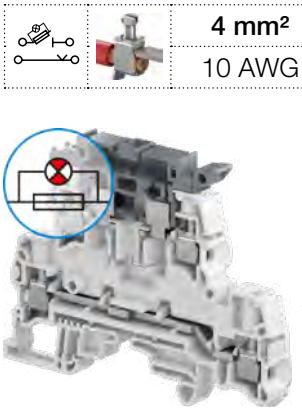

1SNK161097V0014

ZS4-D2-SF1-R

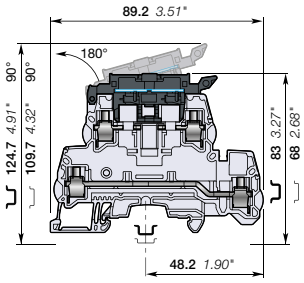

8 mm 0.315 in spacing

4 mm²
10 AWG

Description

- Find the same functionalities as ZS4-D2-SF1, upgraded with our integrated blown fuse indicator (with leakage current < 0.5 mA),
- Only one part number needed to fit AC / DC 24 V up to 110 V.

Ordering details

Description		Color	Type	Part Number		Pkg qty	Weight (1 pce) g
Feed-through + fuse	1 fuse circuit with blown fuse indicator 115 ... 250 V AC / DC and 1 feed-through circuit	Grey, dark grey	ZS4-D2-SF1-R3	1SNK508424R0000		50	29.40
	1 fuse circuit with blown fuse indicator 24 ... 110 V AC / DC and 1 feed-through circuit		ZS4-D2-SF1-R1	1SNK508423R0000		50	29.40

Main technical data

Connecting capacity		IEC	UL - CSA
1 conductor per clamp	Rigid: Solid/Stranded	0.2 ... 6 mm²	24 ... 10 AWG
	Flexible without ferrule	0.22 ... 4 mm²	
	Flexible with non insulated ferrule	0.22 ... 4 mm²	24 ... 12 AWG
	Flexible with insulated ferrule	0.22 ... 4 mm²	24 ... 12 AWG
	Gauge	A3-B3	
2 conductors per clamp	Rigid: Solid/Stranded	0.2 ... 2.5 mm²	24 ... 14 AWG
	Flexible without ferrule	0.2 ... 2.5 mm²	
	Flexible with twin ferrule	0.22 ... 2.5 mm²	24 ... 14 AWG
Disconnect circuit Rated current / Rated cross section		6.3 A / 4 mm²	12 A / 10 AWG
Feed-through circuit Rated current / Rated cross section		32 A / 4 mm²	30 A / 10 AWG
Rated voltage		800 V	300 V
Impulse withstand voltage		8000 V	
Protection		IP20	NEMA 1

Mounting instructions

Rail	TH 35-7.5, TH 35-15
Wire stripping length	11 mm 0.433 in
Tool	Flat screwdriver Ø 3.5 mm Ø 0.138 in
Torque	0.6 Nm ± 0.1 5.31 lb.in ± 0.885

Separate arrangement		Assembly composed of 1 fuse terminal block in between non fuse terminal blocks	Overload and short-circuit protection	2.5 W
			Exclusive short-circuit protection	4 W
Compound arrangement		Assembly composed of 5 fuse terminal blocks	Overload and short-circuit protection	1.6 W
			Exclusive short-circuit protection	4 W

The connecting capacity data for one Rigid: Solid/Stranded, or one Flexible conductor (when applicable) is a mandatory information required by IEC, UL and CSA standards (Copper conductors).
All other data are provided as supplementary information only. For more details, please consult our CB, UL or CSA certificates and technical datasheet available on http://www.TE.com

CE CB RoHS USR CSA EAC BV DNV

Accessories

	Description			Color	Type	Part Number		Pkg qty	Weight (1 pce) g
1	**End stops**	10 mm	0.394 in	Dark grey	BAZH1	1SNK900102R0000		20	24.00
2	**End sections**	2.5 mm	0.098 in	Dark grey	ES4-D2-SF1	1SNK508911R0000		20	5.00
3	**Jumper bars**	2 poles	57 A (IEC)	Orange	JB8-2	1SNK908302R0000		50	2.70
		3 poles	57 A (IEC)		JB8-3	1SNK908303R0000		50	4.10
		4 poles	57 A (IEC)		JB8-4	1SNK908304R0000		50	5.60
		5 poles	57 A (IEC)		JB8-5	1SNK908305R0000		40	7.00
		10 poles	57 A (IEC)		JB8-10	1SNK908310R0000		20	14.20
4	**Lateral jumper bars**	10 poles	35 A (IEC)	Grey	PC81-10	1SNA173523R1100		10	5.00
5	**Test adapters**	For test plugs DIA 2 mm 0.079 in		Dark grey	TP2	1SNK900203R0000		20	1.70
		For test plugs DIA 4 mm 0.157 in			TP4	1SNK900205R0000		20	2.40
6	**Test connectors**	5.2 mm 0.205 in spacing		Dark grey	TC5	1SNK900200R0000		10	5.20
		End module, 5.2 mm 0.205 in			TC5-R1	1SNK900201R0000		10	5.20
7	**Spacers**	2.8 mm	0.110 in	Dark grey	ES-TC8	1SNK900104R0000		10	1.40
8	**Assembly rods**	2 poles			TGA8	1SNA168672R1100		10	1.00
		3 poles			TGA8	1SNA168673R1200		10	1.50
		4 poles			TGA8	1SNA168674R1300		10	2.00
9	**Terminal block markers**	Blank marker		White	MG-CPM 13 41791	1SNB041791R0612		1680	0.27
		Blank card			MC812	1SNK160000R0000		22	10.00
					MC812PA	1SNK169999R0000		20	14.00
		Universal wire markers holder		Grey	UMH	1SNK900611R0000		10	0.20

Complete list of accessories is indicated in the terminal block datasheet including end stops.
Some accessories such as jumper bars may modify the terminal block's ratings: Complete information available in the accessories section of the catalog.

1SNK161077S0201

Technical data valid for copper conductors only.

ZS4-T3 screw clamp terminal blocks

Triple deck with 3 feed-through circuits - 5.2 mm 0.205 in spacing

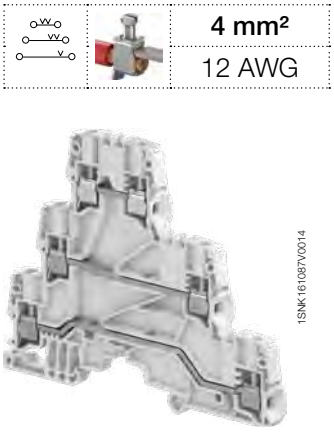

4 mm²	
12 AWG	

1SNK161087V0014

ZS4-T3

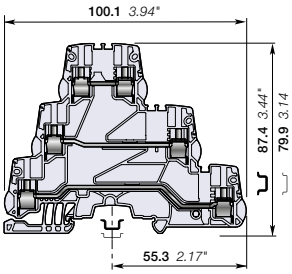

5.2 mm 0.205 in spacing

Description

Save space: 3 independent circuits in just 5.2 mm 0.205 in spacing,

– Fit many applications: space constraints, multiple signals distribution, sensors distribution, thanks to the jumper channels available on each deck.

Ordering details

Description		Color	Type	Part Number		Pkg qty	Weight (1 pce) g
Feed-through	3 feed-through circuits	Grey	ZS4-T3	1SNK505212R0000		25	24.40

Main technical data

Connecting capacity		IEC	UL - CSA
1 conductor per clamp	Rigid: Solid/Stranded	0.2 ... 4 mm²	24 ... 12 AWG
	Flexible without ferrule	0.22 ... 4 mm²	
	Flexible with non insulated ferrule	0.22 ... 4 mm²	24 ... 12 AWG
	Flexible with insulated ferrule	0.22 ... 2.5 mm²	24 ... 14 AWG
	Gauge	A3-B3	
2 conductors per clamp	Rigid: Solid/Stranded	0.2 ... 1.5 mm²	24 ... 16 AWG
	Flexible without ferrule	0.2 ... 1.5 mm²	
	Flexible with twin ferrule	0.22 ... 1.5 mm²	24 ... 16 AWG
Rated current / Rated cross section		32 A / 4 mm²	20 A / 12 AWG
Rated short-time withstand current (1s)		480 A	
Rated voltage		800 V	300 V
Impulse withstand voltage		8000 V	
Protection		IP20	NEMA 1

Mounting instructions

Rail		TH 35-7.5, TH 35-15
Wire stripping length		10.5 mm 0.413 in
Tool		Flat screwdriver Ø 3.5 mm Ø 0.138 in
Torque		0.6 Nm ± 0.1 5.31 lb.in ± 0.885

The connecting capacity data for one Rigid: Solid/Stranded, or one Flexible conductor (when applicable) is a mandatory information required by IEC, UL and CSA standards (Copper conductors). All other data are provided as supplementary information only. For more details, please consult our CB, UL or CSA certificates and technical datasheet available on http://www.TE.com

CE CB RoHS USR CSA EAC BV DNV

Accessories

	Description			Color	Type	Part Number		Pkg qty	Weight (1 pce) g
1	**End stops**	10 mm	0.394 in	Dark grey	BAZH1	1SNK900102R0000		20	24.00
2	**End sections**	0.8 mm	0.031 in	Dark grey	ES4-T3	1SNK505961R0000		20	4.20
3	**Jumper bars**	2 poles	32 A (IEC)	Orange	JB5-2	1SNK905302R0000		50	1.30
		3 poles	32 A (IEC)		JB5-3	1SNK905303R0000		50	2.00
		4 poles	32 A (IEC)		JB5-4	1SNK905304R0000		50	2.70
		5 poles	32 A (IEC)		JB5-5	1SNK905305R0000		50	3.50
		10 poles	32 A (IEC)		JB5-10	1SNK905310R0000		30	7.10
		50 poles	32 A (IEC)		JB5-50	1SNK905350R0000		10	36.00
4	**Test adapters**	For test plugs DIA 2 mm 0.079 in		Dark grey	TP2	1SNK900203R0000		20	1.70
		For test plugs DIA 4 mm 0.157 in			TP4	1SNK900205R0000		20	2.40
5	**Label holders**			Dark grey	LH-J	1SNK900606R0000		100	0.73
6	**Terminal block markers**	Blank marker		White	MG-CPM 13 41790	1SNB041790R0512		1960	0.23
		Blank card			MC512	1SNK140000R0000		22	9.00
					MC512PA	1SNK149999R0000		20	10.00
		Universal wire markers holder		Grey	UMH	1SNK900611R0000		10	0.20

Complete list of accessories is indicated in the terminal block datasheet including end stops.
Some accessories such as jumper bars may modify the terminal block's ratings: Complete information available in the accessories section of the catalog.

1SNK161072S0201

Technical data valid for copper conductors only.

ZS4-T3-R1 screw clamp terminal blocks

Triple deck with 3 feed-through circuits - 6 mm 0.236 in spacing

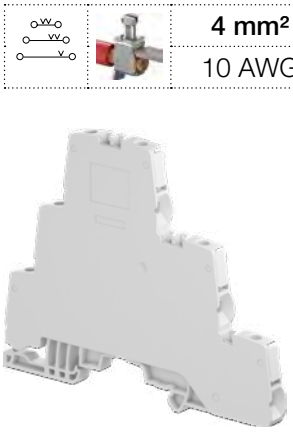

4 mm²	
10 AWG	

ZS4-T3-R1

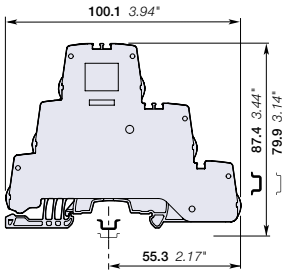

6 mm 0.236 in spacing

Description

Unique triple deck solution combining increased connecting capacity (up to 4 mm² with ferrule) and jumper channel available on each deck,

- Fit many applications: space constraints, multiple signals distribution, sensors distribution,
- Closed terminal block: no end section needed, optimized rigidity.

Ordering details

Description		Color	Type	Part Number		Pkg qty	Weight (1 pce) g
Feed-through	Closed block with 3 feed-through circuits	Grey	ZS4-T3-R1	1SNK506213R0000		50	28.30

Main technical data

Connecting capacity		IEC	UL - CSA
1 conductor per clamp	Rigid: Solid/Stranded	0.2 ... 4 mm²	24 ... 10 AWG
	Flexible without ferrule	0.22 ... 4 mm²	
	Flexible with non insulated ferrule	0.22 ... 4 mm²	24 ... 12 AWG
	Flexible with insulated ferrule	0.22 ... 4 mm²	24 ... 12 AWG
	Gauge	A3-B3	
2 conductors per clamp	Rigid: Solid/Stranded	0.2 ... 1.5 mm²	24 ... 16 AWG
	Flexible without ferrule	0.2 ... 1.5 mm²	
	Flexible with twin ferrule	0.22 ... 1.5 mm²	24 ... 16 AWG
Rated current / Rated cross section		32 A / 4 mm²	30 A / 10 AWG
Rated short-time withstand current (1s)		480 A	
Rated voltage		800 V	300 V
Impulse withstand voltage		8000 V	
Protection		IP20	NEMA 1

Mounting instructions

Rail	TH 35-7.5, TH 35-15
Wire stripping length	10.5 mm 0.413 in
Tool	Flat screwdriver Ø 3.5 mm Ø 0.138 in
Torque	0.6 Nm ± 0.1 5.31 lb.in ± 0.885

The connecting capacity data for one Rigid: Solid/Stranded, or one Flexible conductor (when applicable) is a mandatory information required by IEC, UL and CSA standards (Copper conductors). All other data are provided as supplementary information only. For more details, please consult our CB, UL or CSA certificates and technical datasheet available on http://www.TE.com

CE, CB, RoHS, USR, CSA, EAC, BV, DNV

Accessories

	Description			Color	Type	Part Number		Pkg qty	Weight (1 pce) g
1	**End stops**	10 mm	0.394 in	Dark grey	BAZH1	1SNK900102R0000		20	24.00
2	**Jumper bars**	2 poles	41 A (IEC)	Orange	JB6-2	1SNK906302R0000		50	1.30
		3 poles	41 A (IEC)		JB6-3	1SNK906303R0000		50	2.10
		4 poles	41 A (IEC)		JB6-4	1SNK906304R0000		50	2.90
		5 poles	41 A (IEC)		JB6-5	1SNK906305R0000		50	3.60
		10 poles	41 A (IEC)		JB6-10	1SNK906310R0000		20	7.40
3	**Test adapters**	For test plugs DIA 2 mm 0.079 in		Dark grey	TP2	1SNK900203R0000		20	1.70
		For test plugs DIA 4 mm 0.157 in			TP4	1SNK900205R0000		20	2.40
4	**Label holders**			Dark grey	LH-J	1SNK900606R0000		100	0.73
5	**Terminal block markers**	Blank marker		White	MG-CPM 13 41791	1SNB041791R0612		1680	0.27
		Blank card			MC512	1SNK140000R0000		22	9.00
					MC512PA	1SNK149999R0000		20	10.00
		Universal wire markers holder		Grey	UMH	1SNK900611R0000		10	0.20

Complete list of accessories is indicated in the terminal block datasheet including end stops.
Some accessories such as jumper bars may modify the terminal block's ratings: Complete information available in the accessories section of the catalog.

1SNK161073S0201

Technical data valid for copper conductors only.

ZS4-D-CH-UD screw clamp terminal blocks

Component holder - 5.2 mm 0.205 in spacing

4 mm²
12 AWG

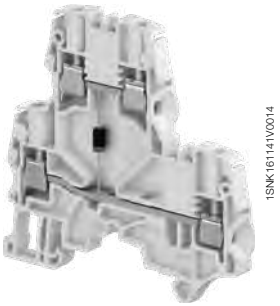

ZS4-D-CH

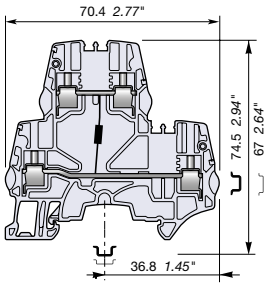

5.2 mm 0.205 in spacing

Description

Protect your circuit with one 1N4007 diode.

Ordering details

Description		Color	Type	Part Number		Pkg qty	Weight (1 pce) g
Component holder	Cathode of the blocking diode connected to the lower circuit	Grey	ZS4-D-CH-UD	1SNK505214R0000		50	15.30

Main technical data

Connecting capacity		IEC	UL - CSA
1 conductor per clamp	Rigid: Solid/Stranded	0.2 ... 4 mm²	24 ... 12 AWG
	Flexible without ferrule	0.22 ... 4 mm²	
	Flexible with non insulated ferrule	0.22 ... 4 mm²	24 ... 12 AWG
	Flexible with insulated ferrule	0.22 ... 2.5 mm²	24 ... 14 AWG
	Gauge	A3-B3	
2 conductors per clamp	Rigid: Solid/Stranded	0.2 ... 1.5 mm²	24 ... 16 AWG
	Flexible without ferrule	0.2 ... 1.5 mm²	
	Flexible with twin ferrule	0.22 ... 1.5 mm²	24 ... 16 AWG
Rated current / Rated cross section		29 A / 4 mm²	20 A / 12 AWG
Rated short-time withstand current (1s)		480 A	
Short Circuit Current Rating (with specific conditions)			
Rated voltage		800 V	300 V
Impulse withstand voltage			
Protection		IP20	NEMA 1

Mounting instructions

Rail	TH 35-7.5, TH 35-15
Wire stripping length	10 mm 0.393 in
Tool	Flat screwdriver Ø 3.5 mm Ø 0.138 in
Torque	0.6 Nm ± 0.1 5.31 lb.in ± 0.885

The connecting capacity data for one Rigid: Solid/Stranded, or one Flexible conductor (when applicable) is a mandatory information required by IEC, UL and CSA standards (Copper conductors). All other data are provided as supplementary information only. For more details, please consult our CB, UL or CSA certificates and technical datasheet available on http://www.TE.com

CE RoHS USR CNR CSA EAC

Accessories

	Description			Color	Type	Part Number		Pkg qty	Weight (1 pce) g
1	**End stops**	10 mm	0.394 in	Dark grey	BAZH1	1SNK900102R0000		20	24.00
2	**End sections**	2.55 mm	0.100 in	Dark grey	ES4-D2	1SNK505960R0000		20	4.10
3	**Jumper bars**	2 poles	32 A (IEC)	Orange	JB5-2	1SNK905302R0000		50	1.30
		3 poles	32 A (IEC)		JB5-3	1SNK905303R0000		50	2.00
		4 poles	32 A (IEC)		JB5-4	1SNK905304R0000		50	2.70
		5 poles	32 A (IEC)		JB5-5	1SNK905305R0000		50	3.50
		10 poles	32 A (IEC)		JB5-10	1SNK905310R0000		30	7.10
4	**Test adapters**	For test plugs DIA 2 mm 0.079 in		Dark grey	TP2	1SNK900203R0000		20	1.70
		For test plugs DIA 4 mm 0.157 in			TP4	1SNK900205R0000		20	2.40
5	**Test connectors**	5.2 mm 0.205 in spacing		Dark grey	TC5	1SNK900200R0000		10	5.20
		End module, 5.2 mm 0.205 in			TC5-R1	1SNK900201R0000		10	5.20
6	**Shield connectors**				SHB	1SNK900602R0000		20	4.90
7	**Label holders**			Dark grey	LH-J	1SNK900606R0000		100	0.73
8	**Terminal block markers**	Blank marker		White	MG-CPM 13 41790	1SNB041790R0512		1960	0.23
		Blank card			MC512	1SNK140000R0000		22	9.00
					MC512PA	1SNK149999R0000		20	10.00
		Universal wire markers holder		Grey	UMH	1SNK900611R0000		10	0.20

Complete list of accessories is indicated in the terminal block datasheet including end stops.
Some accessories such as jumper bars may modify the terminal block's ratings: Complete information available in the accessories section of the catalog.

1SNK161090S0201

Technical data valid for copper conductors only.

ZS4-D-CH-DU screw clamp terminal blocks

Component holder - 5.2 mm 0.205 in spacing

ZS4-D-CH

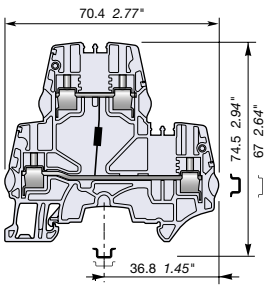

5.2 mm 0.205 in spacing

		4 mm²
		12 AWG

Description

Protect your circuit with one 1N4007 diode.

Ordering details

Description		Color	Type	Part Number		Pkg qty	Weight (1 pce) g
Component holder	Cathode of the blocking diode connected to the upper circuit	Grey	ZS4-D-CH-DU	1SNK505215R0000		50	15.30

Main technical data

Connecting capacity		IEC	UL - CSA
1 conductor per clamp	Rigid: Solid/Stranded	0.2 ... 4 mm²	24 ... 12 AWG
	Flexible without ferrule	0.22 ... 4 mm²	
	Flexible with non insulated ferrule	0.22 ... 4 mm²	24 ... 12 AWG
	Flexible with insulated ferrule	0.22 ... 2.5 mm²	24 ... 14 AWG
	Gauge	A3-B3	
2 conductors per clamp	Rigid: Solid/Stranded	0.2 ... 1.5 mm²	24 ... 16 AWG
	Flexible without ferrule	0.2 ... 1.5 mm²	
	Flexible with twin ferrule	0.22 ... 1.5 mm²	24 ... 16 AWG
Rated current / Rated cross section		29 A / 4 mm²	20 A / 12 AWG
Rated short-time withstand current (1s)		480 A	
Short Circuit Current Rating (with specific conditions)			
Rated voltage		800 V	300 V
Impulse withstand voltage			
Protection		IP20	NEMA 1

Mounting instructions

Rail	TH 35-7.5, TH 35-15
Wire stripping length	10 mm 0.393 in
Tool	Flat screwdriver Ø 3.5 mm Ø 0.138 in
Torque	0.6 Nm ± 0.1 5.31 lb.in ± 0.885

The connecting capacity data for one Rigid: Solid/Stranded, or one Flexible conductor (when applicable) is a mandatory information required by IEC, UL and CSA standards (Copper conductors). All other data are provided as supplementary information only. For more details, please consult our CB, UL or CSA certificates and technical datasheet available on http://www.TE.com

CE RoHS USR CNR CSA EAC

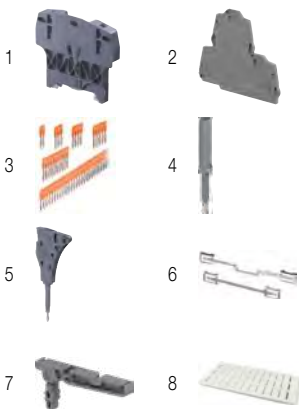

Accessories

	Description			Color	Type	Part Number		Pkg qty	Weight (1 pce) g
1	**End stops**	10 mm	0.394 in	Dark grey	BAZH1	1SNK900102R0000		20	24.00
2	**End sections**	2.55 mm	0.100 in	Dark grey	ES4-D2	1SNK505960R0000		20	4.10
3	**Jumper bars**	2 poles	32 A (IEC)	Orange	JB5-2	1SNK905302R0000		50	1.30
		3 poles	32 A (IEC)		JB5-3	1SNK905303R0000		50	2.00
		4 poles	32 A (IEC)		JB5-4	1SNK905304R0000		50	2.70
		5 poles	32 A (IEC)		JB5-5	1SNK905305R0000		50	3.50
		10 poles	32 A (IEC)		JB5-10	1SNK905310R0000		30	7.10
		50 poles	32 A (IEC)		JB5-50	1SNK905350R0000		10	36.00
4	**Test adapters**	For test plugs DIA 2 mm 0.079 in		Dark grey	TP2	1SNK900203R0000		20	1.70
		For test plugs DIA 4 mm 0.157 in			TP4	1SNK900205R0000		20	2.40
5	**Test connectors**	5.2 mm 0.205 in spacing		Dark grey	TC5	1SNK900200R0000		10	5.20
		End module, 5.2 mm 0.205 in			TC5-R1	1SNK900201R0000		10	5.20
6	**Shield connectors**				SHB	1SNK900602R0000		20	4.90
7	**Label holders**			Dark grey	LH-J	1SNK900606R0000		100	0.73
8	**Terminal block markers**	Blank marker		White	MG-CPM 13 41790	1SNB041790R0512		1960	0.23
		Blank card			MC512	1SNK140000R0000		22	9.00
					MC512PA	1SNK149999R0000		20	10.00
		Universal wire markers holder		Grey	UMH	1SNK900611R0000		10	0.20

Complete list of accessories is indicated in the terminal block datasheet including end stops.
Some accessories such as jumper bars may modify the terminal block's ratings: Complete information available in the accessories section of the catalog.

1SNK161091S0201

Technical data valid for copper conductors only.

Secure your measurement operations

The new ZS10-ST test & measurement terminal blocks benefit from our long experience in the energy applications and from the SNK features: performances, ergonomy, common accessories and marking.

High performances

- 10 mm² 6 AWG
- 6 mm² 10 AWG with ferrule
- 50 A (IEC) 53 A (UL
- Worldwide certifications

Rely on our smart design

Insulated short circuit bridges: SC-JB8

Insulated captive test sockets: AJS9
6 colors
compatible with standard
DIA. 4 mm test plugs
(IEC 60010-031)

Circuit separators: CS
For visual separation between
CT & PT circuits

Protecting cover kits: KCO

New ground terminal block: ZS10-PE-R1

Lateral jumper bar: PC8
For CT or PT commoning

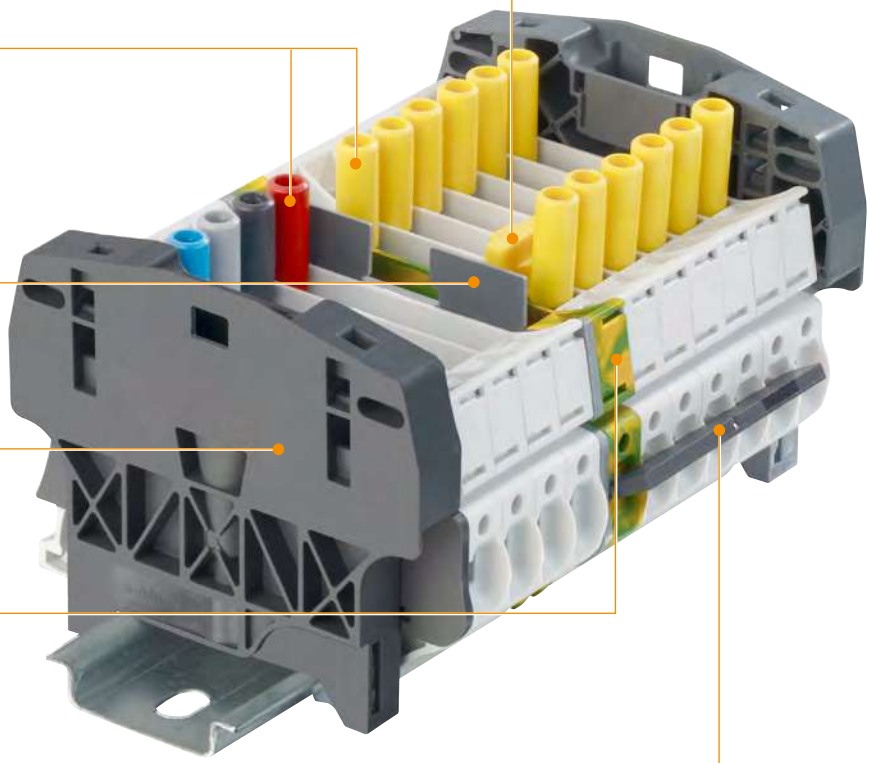

1SNK160057S0201

Assembly with protecting cover

Drilling and centering guide

Guarantee access only to authorized operators

cover can be permanently sealed with a seal or cable tie.

Centering drilling guide for seal or cable tie.

The cover is specially designed to ease its mounting or removal:

– Hook shape on each side for convenient removal with screwdriver

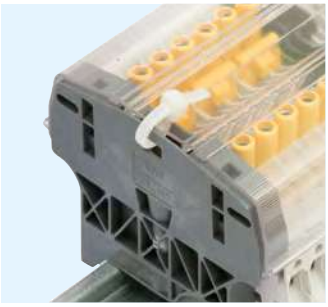

Seal with cable tie

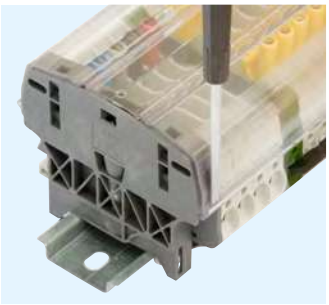

Convenient removal with screwdriver

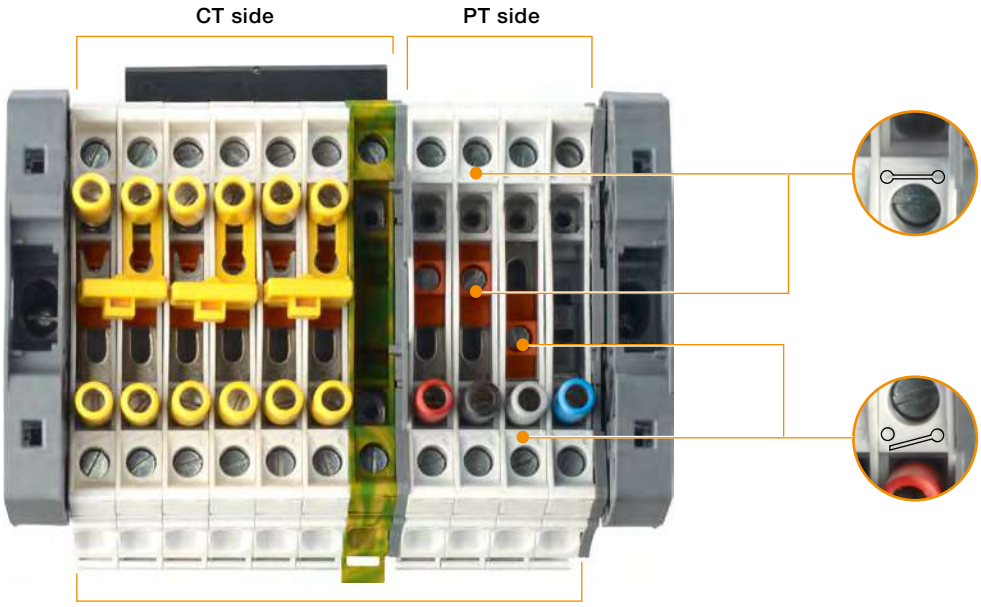

sliding link status: closed

Disconnect sliding link status:
Open and close symbols help to visualize the sliding link position

sliding link status: opened

Short-circuit CT circuits safely and conveniently

1. Fully operated by screwdriver (DIA 3.5 mm)
2. Short-circuited position secured thanks to AJS9 test sockets tightening
3. Adapted hook shape maintain the bridge on terminal block in the non connected position

1SNK160057S0201

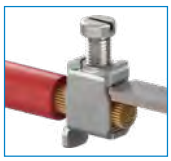

Common point on the transformers

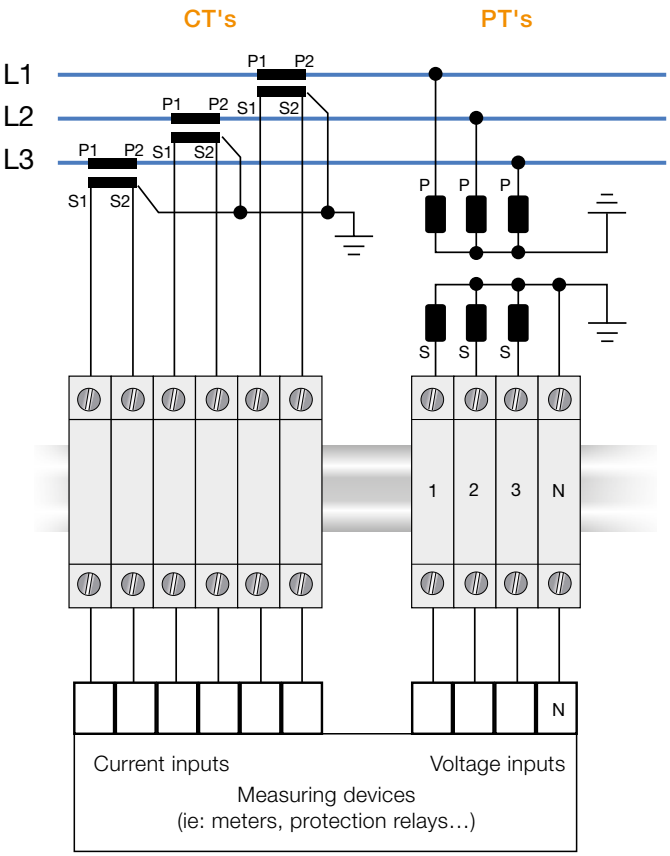

Bill of material optimized

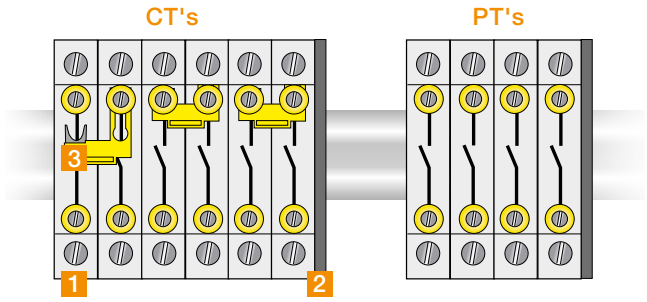

Description	Type	Order code	Qty needed	
			CT's	PT's
1 Terminal block	ZS10-ST-T4	1SNK508311R0000	6	4
2 End section	ES10-ST	1SNK508910R0000	1	1
3 Short-circuit bridges	SC-JB8-2	1SNK900652R0000	3	0

Bill of material with convenient customization (test sockets, feed-through terminals…)

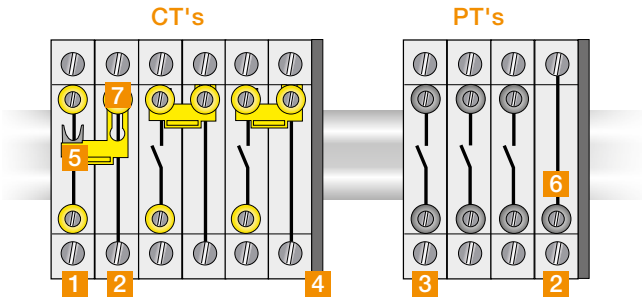

Description	Type	Order code	Qty needed	
			CT's	PT's
1 Terminal block	ZS10-ST-T4	1SNK508311R0000	3	0
2 Terminal block	ZS10-R1	1SNK508011R0000	3	1
3 Terminal block	ZS10-ST-1	1SNK508312R0000	0	3
4 End section	ES10-ST	1SNK508910R0000	1	1
5 Short-circuit bridges	SC-JB8-2	1SNK900652R0000	3	0
6 Test socket	AL4-M3	1SNA206721R0100	0	1
7 Insulated test socket	AJS9	1SNA179726R0200	3	0

1SNK160058S0201

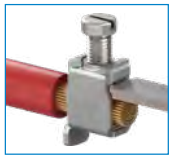

Common point on the terminal block assembly

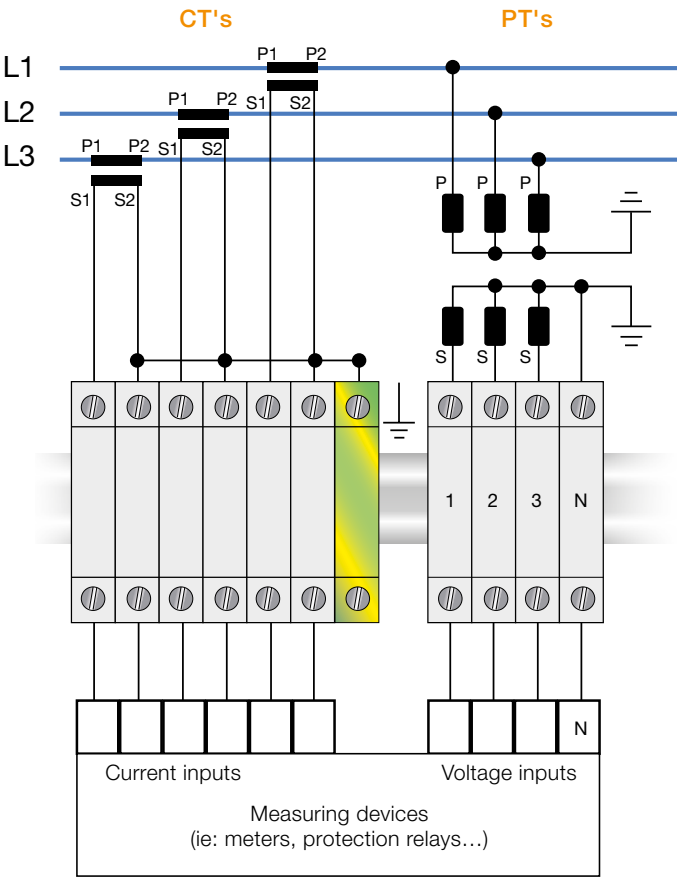

Bill of material optimized

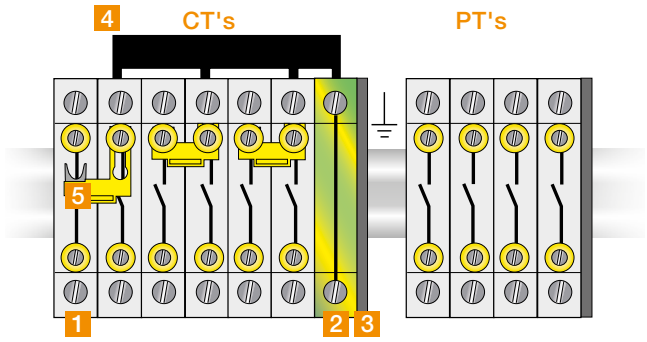

	Description	Type	Order code	Qty needed	
				CT's	PT's
1	Terminal block	ZS10-ST-T4	1SNK508311R0000	6	4
2	Terminal block	ZS10-PE-R1	1SNK508151R0000	1	0
3	End section	ES10-ST	1SNK508910R0000	1	1
4	Lateral jumper bars	PC8-R1	1SNA400711R0600	1	0
5	Short-circuit bridges	SC-JB8-2	1SNK900652R0000	3	0

Bill of material with convenient customization (test sockets, feed-through terminals...)

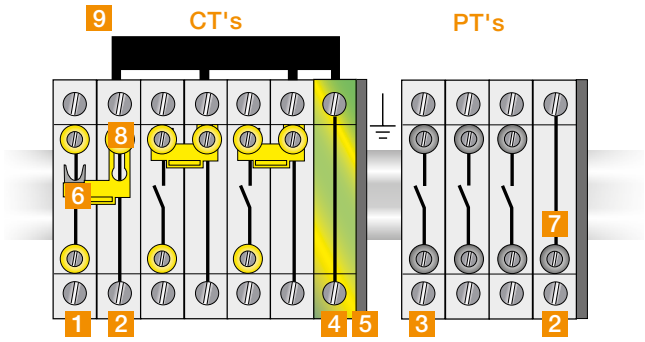

	Description	Type	Order code	Qty needed	
				CT's	PT's
1	Terminal block	ZS10-ST-T4	1SNK508311R0000	3	0
2	Terminal block	ZS10-R1	1SNK508011R0000	3	1
3	Terminal block	ZS10-ST-1	1SNK508312R0000	0	3
4	Terminal block	ZS10-PE-R1	1SNK508151R0000	1	0
5	End section	ES10-ST	1SNK508910R0000	1	1
6	Short-circuit bridges	SC-JB8-2	1SNK900652R0000	3	0
7	Test socket	AL4-M3	1SNA206721R0100	0	1
8	Insulated test socket	AJS9	1SNA179726R0200	3	0
9	Lateral jumper bars	PC8-R1	1SNA400711R0600	1	0

1SNK160058S0201

ZS10-ST screw clamp terminal blocks

Test disconnect with sliding link - 8 mm 0.315 in spacing

10 mm²

6 AWG

1SNK161065F0014

ZS10-ST

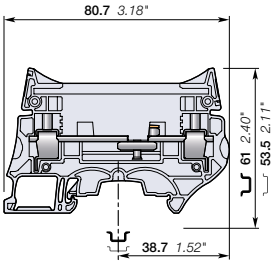

8 mm 0.315 in spacing

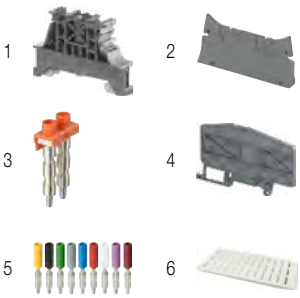

Description

- Secure your disconnect operations in control circuits with the robust sliding link operated with a screwdriver,
- Customize ZS10-ST with colored test sockets in order to identify conveniently each phase of the Current Transformer or Potential Transformers secondary circuits,
- Fully compatible with the ZS10-ST-T4 accessories.

Ordering details

Description	Color	Type	Part Number		Pkg qty	Weight (1 pce) g
Disconnect	Grey	ZS10-ST	1SNK508310R0000		25	24.80

Main technical data

Connecting capacity		IEC	UL - CSA
1 conductor per clamp	Rigid: Solid/Stranded	0.5 ... 10 mm²	24 ... 6 AWG
	Flexible without ferrule	0.5 ... 10 mm²	
	Flexible with non insulated ferrule	0.5 ... 10 mm²	24 ... 8 AWG
	Flexible with insulated ferrule	0.5 ... 6 mm²	24 ... 10 AWG
	Gauge	A5-B5	
2 conductors per clamp	Rigid: Solid/Stranded	0.5 ... 4 mm²	20 ... 12 AWG
	Flexible without ferrule	0.5 ... 4 mm²	
	Flexible with twin ferrule	0.5 ... 4 mm²	20 ... 12 AWG
Rated current / Rated cross section		50 A / 10 mm²	53 A / 6 AWG
Rated short-time withstand current (1s)		1200 A	
Rated voltage		630 V	300 V
Impulse withstand voltage		8000 V	
Protection		IP20	NEMA 1

Mounting instructions

Rail		TH 35-7.5, TH 35-15
Wire stripping length		13 mm 0.512 in
Screw clamp Tool		Flat screwdriver Ø 3.5 mm Ø 0.138 in
Torque		1.3 Nm ± 0.3 11.5 lb.in ± 2.65
Disconnect device Tool		Flat screwdriver Ø 3.5 mm Ø 0.138
Torque		0.4 Nm ... 0.6 Nm 3.5 lb.in ... 5.3 lb.in

The connecting capacity data for one Rigid: Solid/Stranded, or one Flexible conductor (when applicable) is a mandatory information required by IEC, UL and CSA standards (Copper conductors). All other data are provided as supplementary information only. For more details, please consult our CB, UL or CSA certificates and technical datasheet available on http://www.TE.com

CE | CB | RoHS | USR CNR | CSA | EAC | EV | DNV

Accessories

	Description			Color	Type	Part Number		Pkg qty	Weight (1 pce) g
1	**End stops**	10 mm	0.394 in	Dark grey	BAM4	1SNK900001R0000		50	14.00
2	**End sections**	2 mm	0.079 in	Dark grey	ES10-ST	1SNK508910R0000		20	3.5
3	**Jumper bars**	2 poles	50 A (IEC)	Orange	JB8-2-R1	1SNK908902R0000		10	7.6
		3 poles	50 A (IEC)		JB8-3-R1	1SNK908903R0000		10	11.6
		4 poles	50 A (IEC)		JB8-4-R1	1SNK908904R0000		10	15.5
		5 poles	50 A (IEC)		JB8-5-R1	1SNK908905R0000		10	19.4
		10 poles	50 A (IEC)		JB8-10-R1	1SNK908910R0000		10	39.00
4	**Circuit separators**	3 mm	0.118 in	Dark grey	CS-R3	1SNK900107R0000		20	6.40
5	**Test sockets**	Test sockets DIA 4 mm 0.157 in		Yellow	AJS9	1SNA179726R0200		25	3.60
				Black	AJS9-BK	1SNA206680R1500		25	3.60
				Green	AJS9-GN	1SNA206681R0200		25	3.60
				Grey	AJS9-GR	1SNA206682R0300		25	3.60
				Blue	AJS9-BL	1SNA206683R0400		25	3.60
				Red	AJS9-RD	1SNA206720R1400		25	3.60
				White	AJS9-WH	1SNA206765R0000		25	3.60
				Purple	AJS9-PR	1SNA206772R0000		25	3.60
				Brown	AJS9-BR	1SNA206782R0000		25	3.60
		DIA 4 mm 0.157 in - H=12 mm 0.492 in - M3 screw			AL4-M3	1SNA206721R0100		50	1.10
6	**Terminal block markers**	Blank marker		White	MG-CPM 13 41791	1SNB041791R0612		1680	0.27
		Blank card			MC812	1SNK160000R0000		22	10.00
					MC812PA	1SNK169999R0000		20	14.00
		Universal wire markers holder		Grey	UMH	1SNK900611R0000		10	0.20

Complete list of accessories is indicated in the terminal block datasheet including end stops.
Some accessories such as jumper bars may modify the terminal block's ratings: Complete information available in the accessories section of the catalog.

ZS10-R1

ZS10-PE-R1

Screw clamp terminal blocks

Description		Color	Type	Part Number		Pkg qty	Weight (1 pce) g
Feed-through	Profile aligned with ZS10-ST...	Grey	ZS10-R1	1SNK508011R0000		25	20.90
Ground	Profile aligned with ZS10-ST...	Green-yellow	ZS10-PE-R1	1SNK508151R0000		25	28.40

1SNK161056S0201

Technical data valid for copper conductors only.

ZS10-ST-1 screw clamp terminal blocks

Test disconnect with sliding link for Potential Transformer circuits - 8 mm 0.315 in spacing

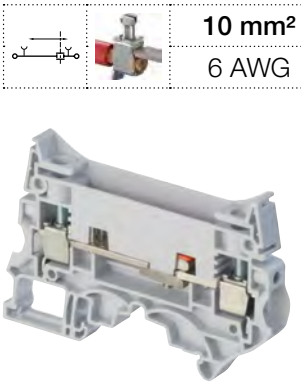

10 mm²
6 AWG

1SNK161069F0014

ZS10-ST-1

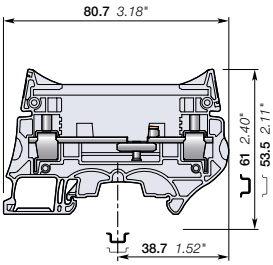

8 mm 0.315 in spacing

Description

Test terminal blocks especially designed for Potential Transformers circuits:

- low profile voltage measurement thanks to the two compact built-in test sockets compatible with DIA 4 mm 0.157 in test plugs,
- Installed with our aligned feed-through and ground terminal blocks, you benefit of a complete and compact solution for your PT circuits.

Ordering details

Description		Color	Type	Part Number		Pkg qty	Weight (1 pce) g
Disconnect	With 2 test sockets DIA 4 mm 0.157 in	Grey	ZS10-ST-1	1SNK508312R0000		25	27.00

Main technical data

Connecting capacity		IEC	UL - CSA
1 conductor per clamp	Rigid: Solid/Stranded	0.5 ... 10 mm²	24 ... 6 AWG
	Flexible without ferrule	0.5 ... 10 mm²	
	Flexible with non insulated ferrule	0.5 ... 10 mm²	24 ... 8 AWG
	Flexible with insulated ferrule	0.5 ... 6 mm²	24 ... 10 AWG
	Gauge	A5-B5	
2 conductors per clamp	Rigid: Solid/Stranded	0.5 ... 4 mm²	20 ... 12 AWG
	Flexible without ferrule	0.5 ... 4 mm²	
	Flexible with twin ferrule	0.5 ... 4 mm²	20 ... 12 AWG
Rated current / Rated cross section		50 A / 10 mm²	53 A / 6 AWG
Rated short-time withstand current (1s)		1200 A	
Rated voltage		630 V	300 V
Impulse withstand voltage		8000 V	
Protection		IP10	NEMA 1

Mounting instructions

Rail		TH 35-7.5, TH 35-15
Wire stripping length		13 mm 0.512 in
Screw clamp Tool		Flat screwdriver Ø 3.5 mm Ø 0.138 in
Torque		1.3 Nm ± 0.3 11.5 lb.in ± 2.65
Disconnect device Tool		Flat screwdriver Ø 3.5 mm Ø 0.138
Torque		0.4 Nm ... 0.6 Nm 3.5 lb.in ... 5.3 lb.in

The connecting capacity data for one Rigid: Solid/Stranded, or one Flexible conductor (when applicable) is a mandatory information required by IEC, UL and CSA standards (Copper conductors). All other data are provided as supplementary information only. For more details, please consult our CB, UL or CSA certificates and technical datasheet available on http://www.TE.com

CE | CB | RoHS | USR CNR | CSA | EAC | BV | DNV

Accessories

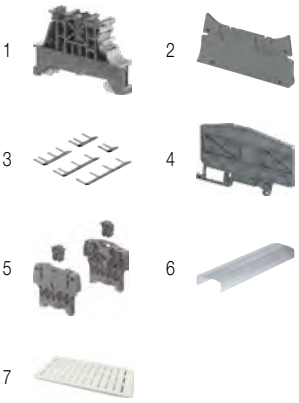

	Description			Color	Type	Part Number		Pkg qty	Weight (1 pce) g
1	**End stops**	10 mm	0.394 in	Dark grey	BAM4	1SNK900001R0000		50	14.00
2	**End sections**	2 mm	0.079 in	Dark grey	ES10-ST	1SNK508910R0000		20	3.5
3	**Lateral jumper bars**	10 poles		Black	PC8-10	1SNA163313R2400		10	14.00
		4/6 poles			PC8-R1	1SNA400711R0600		10	6.60
		4/8 poles			PC8-R2	1SNA400712R0700		10	7.80
		4/10 poles			PC8-R3	1SNA400713R0000		10	9.00
		3/4 poles			PC8-R4	1SNA400724R0300		10	4.50
		4/7 poles			PC8-R5	1SNA400842R0000		10	6.60
		2/3 poles			PC8-R6	1SNA400843R0000		10	6.60
		4/6 poles			PC8-R7	1SNA400849R0000		10	6.60
		4/8 poles			PC8-R8	1SNA400850R0000		10	7.80
4	**Circuit separators**	3 mm	0.118 in	Dark grey	CS-R3	1SNK900107R0000		20	6.40
5	**Protecting cover kits**			Dark grey	KCO	1SNK900624R0000		1	47.80
6	**Protecting covers**	1 m 39.4 in length		Transparent	CO	1SNK900604R0000		1	300.00
7	**Terminal block markers**	Blank marker		White	MG-CPM 13 41791	1SNB041791R0612		1680	0.27
		Blank card			MC812	1SNK160000R0000		22	10.00
					MC812PA	1SNK169999R0000		20	14.00
		Universal wire markers holder		Grey	UMH	1SNK900611R0000		10	0.20

Complete list of accessories is indicated in the terminal block datasheet including end stops.
Some accessories such as jumper bars may modify the terminal block's ratings: Complete information available in the accessories section of the catalog.

ZS10-R1 ZS10-PE-R1

Screw clamp terminal blocks

Description		Color	Type	Part Number		Pkg qty	Weight (1 pce) g
Feed-through	Profile aligned with ZS10-ST...	Grey	ZS10-R1	1SNK508011R0000		25	20.90
Ground	Profile aligned with ZS10-ST...	Green-yellow	ZS10-PE-R1	1SNK508151R0000		25	28.40

1SNK161062S0201

Technical data valid for copper conductors only.

ZS10-ST-T4 screw clamp terminal blocks

Test disconnect with sliding link for Current Transformer circuits - 8 mm 0.315 in spacing

10 mm²
6 AWG

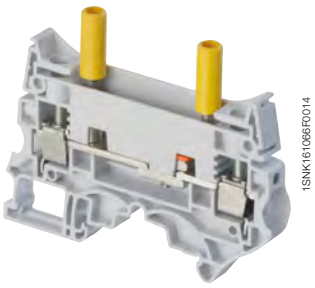

ZS10-ST-T4

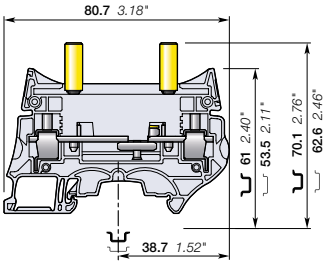

8 mm 0.315 in spacing

Description

Test terminal blocks especially designed for Current Transformers circuits:

- easy and safe current measurement thanks to the two insulated built-in test sockets compatible with IP20 DIA 4 mm 0.157 in test plugs (per IEC60101-031),
- convenient short-circuit operations with the SC-JB insulated sliding bridges.

Ordering details

Description		Color	Type	Part Number		Pkg qty	Weight (1 pce) g
Disconnect	With two yellow test sockets DIA 4 mm 0.157 in	Grey	ZS10-ST-T4	1SNK508311R0000		25	31.90

Main technical data

Connecting capacity		IEC	UL - CSA
1 conductor per clamp	Rigid: Solid/Stranded	0.5 ... 10 mm²	24 ... 6 AWG
	Flexible without ferrule	0.5 ... 10 mm²	
	Flexible with non insulated ferrule	0.5 ... 10 mm²	24 ... 8 AWG
	Flexible with insulated ferrule	0.5 ... 6 mm²	24 ... 10 AWG
	Gauge	A5-B5	
2 conductors per clamp	Rigid: Solid/Stranded	0.5 ... 4 mm²	20 ... 12 AWG
	Flexible without ferrule	0.5 ... 4 mm²	
	Flexible with twin ferrule	0.5 ... 4 mm²	20 ... 12 AWG
Rated current / Rated cross section		50 A / 10 mm²	53 A / 6 AWG
Rated short-time withstand current (1s)		1200 A	
Rated voltage		630 V	300 V
Impulse withstand voltage		8000 V	
Protection		IP20	NEMA 1

Mounting instructions

Rail	TH 35-7.5, TH 35-15
Wire stripping length	13 mm 0.512 in
Screw clamp Tool	Flat screwdriver Ø 3.5 mm Ø 0.138 in
Torque	1.3 Nm ± 0.3 11.5 lb.in ± 2.65
Disconnect device Tool	Flat screwdriver Ø 3.5 mm Ø 0.138
Torque	0.4 Nm ... 0.6 Nm 3.5 lb.in ... 5.3 lb.in
Test socket Tool	Flat screwdriver Ø 3.5 mm Ø 0.138
Torque	0.4 Nm ... 0.6 Nm 3.5 lb.in ... 5.3 lb.in

The connecting capacity data for one Rigid: Solid/Stranded, or one Flexible conductor (when applicable) is a mandatory information required by IEC, UL and CSA standards (Copper conductors). All other data are provided as supplementary information only. For more details, please consult our CB, UL or CSA certificates and technical datasheet available on http://www.TE.com

CE | CB | RoHS | USR CNR | CSA | EAC | BV | DNV

Accessories

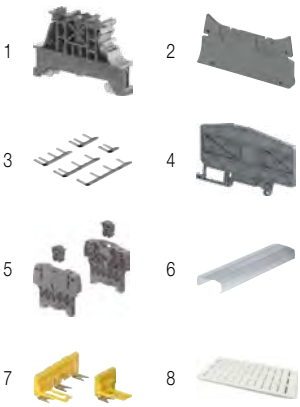

	Description			Color	Type	Part Number		Pkg qty	Weight (1 pce) g
1	**End stops**	10 mm	0.394 in	Dark grey	BAM4	1SNK900001R0000		50	14.00
2	**End sections**	2 mm	0.079 in	Dark grey	ES10-ST	1SNK508910R0000		20	3.5
3	**Lateral jumper bars**	10 poles		Black	PC8-10	1SNA163313R2400		10	14.00
		4/6 poles			PC8-R1	1SNA400711R0600		10	6.60
		4/8 poles			PC8-R2	1SNA400712R0700		10	7.80
		4/10 poles			PC8-R3	1SNA400713R0000		10	9.00
		3/4 poles			PC8-R4	1SNA400724R0300		10	4.50
		4/7 poles			PC8-R5	1SNA400842R0000		10	6.60
		2/3 poles			PC8-R6	1SNA400843R0000		10	6.60
		4/6 poles			PC8-R7	1SNA400849R0000		10	6.60
		4/8 poles			PC8-R8	1SNA400850R0000		10	7.80
4	**Circuit separators**	3 mm	0.118 in	Dark grey	CS-R3	1SNK900107R0000		20	6.40
5	**Protecting cover kits**			Dark grey	KCO	1SNK900624R0000		1	47.80
6	**Protecting covers**	1 m 39.4 in length		Transparent	CO	1SNK900604R0000		1	300.00
7	**Short circuit bridges**	2 poles		Yellow	SC-JB8-2	1SNK900652R0000		25	2.00
		3 poles			SC-JB8-3	1SNK900653R0000		25	3.4
		4 poles			SC-JB8-4	1SNK900654R0000		25	4.7
8	**Terminal block markers**	Blank marker		White	MG-CPM 13 41791	1SNB041791R0612		1680	0.27
		Blank card			MC812	1SNK160000R0000		22	10.00
					MC812PA	1SNK169999R0000		20	14.00
		Universal wire markers holder		Grey	UMH	1SNK900611R0000		10	0.20

Complete list of accessories is indicated in the terminal block datasheet including end stops.
Some accessories such as jumper bars may modify the terminal block's ratings: Complete information available in the accessories section of the catalog.

Screw clamp terminal blocks

ZS10-R1 ZS10-PE-R1

Description		Color	Type	Part Number		Pkg qty	Weight (1 pce) g
Feed-through	Profile aligned with ZS10-ST...	Grey	ZS10-R1	1SNK508011R0000		25	20.90
Ground	Profile aligned with ZS10-ST...	Green-yellow	ZS10-PE-R1	1SNK508151R0000		25	28.40

1SNK161057S0201

Technical data valid for copper conductors only.

ZS10-R1 screw clamp terminal blocks
Feed-through - 8 mm 0.315 in spacing

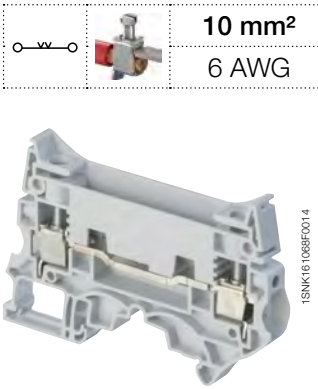

ZS10-R1

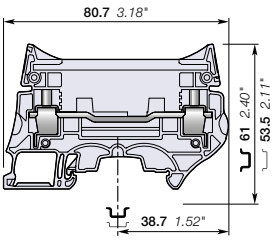

8 mm 0.315 in spacing

	10 mm²
	6 AWG

Description

- With the same profile as the ZS10-ST..., the feed-through ZS10-R1 allows you to fully implement the electrical drawing of your CT or PT circuits,
- Fully compatible with the ZS10-ST... accessories.

Ordering details

Description		Color	Type	Part Number		Pkg qty	Weight (1 pce) g
Feed-through	Profile aligned with ZS10-ST...	Grey	ZS10-R1	1SNK508011R0000		25	20.90

Main technical data

Connecting capacity		IEC	UL - CSA
1 conductor per clamp	Rigid: Solid/Stranded	0.5 ... 10 mm²	24 ... 6 AWG
	Flexible without ferrule	0.5 ... 10 mm²	
	Flexible with non insulated ferrule	0.5 ... 10 mm²	24 ... 8 AWG
	Flexible with insulated ferrule	0.5 ... 6 mm²	24 ... 10 AWG
	Gauge	A5-B5	
2 conductors per clamp	Rigid: Solid/Stranded	0.5 ... 4 mm²	20 ... 12 AWG
	Flexible without ferrule	0.5 ... 4 mm²	
	Flexible with twin ferrule	0.5 ... 4 mm²	20 ... 12 AWG
Rated current / Rated cross section		57 A / 10 mm²	62 A / 6 AWG
Rated short-time withstand current (1s)		1200 A	
Short Circuit Current Rating (with specific conditions)			
Rated voltage		630 V	300 V
Impulse withstand voltage		8000 V	
Protection		IP20	NEMA 1

Mounting instructions

Rail	TH 35-7.5, TH 35-15
Wire stripping length	13 mm 0.512 in
Tool	Flat screwdriver Ø 3.5 mm Ø 0.138 in
Torque	1.3 Nm ± 0.3 11.5 lb.in ± 2.65

The connecting capacity data for one Rigid: Solid/Stranded, or one Flexible conductor (when applicable) is a mandatory information required by IEC, UL and CSA standards (Copper conductors). All other data are provided as supplementary information only. For more details, please consult our CB, UL or CSA certificates and technical datasheet available on http://www.TE.com

CE CB RoHS USR CNR CSA EAC BV DNV

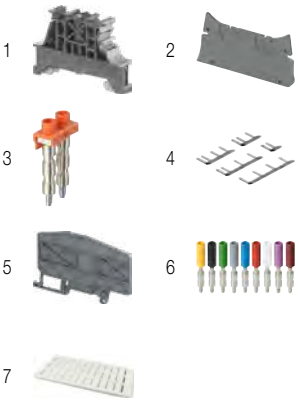

Accessories

	Description			Color	Type	Part Number		Pkg qty	Weight (1 pce) g
1	**End stops**	10 mm	0.394 in	Dark grey	BAM4	1SNK900001R0000		50	14.00
2	**End sections**	2 mm	0.079 in	Dark grey	ES10-ST	1SNK508910R0000		20	3.5
3	**Jumper bars**	2 poles	50 A (IEC)	Orange	JB8-2-R1	1SNK908902R0000		10	7.6
		3 poles	50 A (IEC)		JB8-3-R1	1SNK908903R0000		10	11.6
		4 poles	50 A (IEC)		JB8-4-R1	1SNK908904R0000		10	15.5
		5 poles	50 A (IEC)		JB8-5-R1	1SNK908905R0000		10	19.4
		10 poles	50 A (IEC)		JB8-10-R1	1SNK908910R0000		10	39.00
4	**Lateral jumper bars**	4/7 poles		Black	PC8-R5	1SNA400842R0000		10	6.60
		2/3 poles			PC8-R6	1SNA400843R0000		10	6.60
		4/6 poles			PC8-R7	1SNA400849R0000		10	6.60
		4/8 poles			PC8-R8	1SNA400850R0000		10	7.80
5	**Circuit separators**	3 mm	0.118 in	Dark grey	CS-R3	1SNK900107R0000		20	6.40
6	**Test sockets**	Test sockets DIA 4 mm 0.157 in		Yellow	AJS9	1SNA179726R0200		25	3.60
7	**Terminal block markers**	Blank marker		White	MG-CPM 13 41791	1SNB041791R0612		1680	0.27
		Blank card			MC812	1SNK160000R0000		22	10.00
					MC812PA	1SNK169999R0000		20	14.00
		Universal wire markers holder		Grey	UMH	1SNK900611R0000		10	0.20

Complete list of accessories is indicated in the terminal block datasheet including end stops.
Some accessories such as jumper bars may modify the terminal block's ratings: Complete information available in the accessories section of the catalog.

1SNK161059S0201

Technical data valid for copper conductors only.

ZS10-PE-R1 screw clamp terminal blocks

Ground - 8 mm 0.315 in spacing

10 mm²

6 AWG

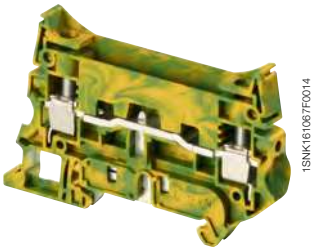

1SNK161067F0014

ZS10-PE-R1

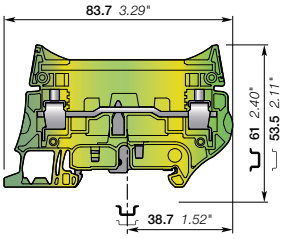

8 mm 0.315 in spacing

Description

- With the same profile as the ZS10-ST..., the ground ZS10-PE-R1 allows you to fully implement the electrical drawing of your CT or PT circuits,
- Fully compatible with the ZS10-ST... accessories,
- Short-circuit performances above the requirements of IEC 60947-7-2 terminal block standard,
- Secured snap on or remove from the rail.

Ordering details

Description		Color	Type	Part Number		Pkg qty	Weight (1 pce) g
Ground	Profile aligned with ZS10-ST...	Green-yellow	ZS10-PE-R1	1SNK508151R0000		25	28.40

Main technical data

Connecting capacity		IEC	UL - CSA
1 conductor per clamp	Rigid: Solid/Stranded	0.5 ... 10 mm²	24 ... 6 AWG
	Flexible without ferrule	0.5 ... 10 mm²	
	Flexible with non insulated ferrule	0.5 ... 10 mm²	24 ... 8 AWG
	Flexible with insulated ferrule	0.5 ... 6 mm²	24 ... 10 AWG
	Gauge	A5-B5	
Rated cross section		10 mm²	6 AWG
Rated short-time withstand current (1s)		1200 A	1596 A
Protection		IP20	NEMA 1

Mounting instructions

Rail		TH 35-7.5, TH 35-15
Wire stripping length		13 mm 0.512 in
Tool		Flat screwdriver Ø 3.5 mm Ø 0.138 in
Torque		1.3 Nm ± 0.3 11.5 lb.in ± 2.65

The connecting capacity data for one Rigid: Solid/Stranded, or one Flexible conductor (when applicable) is a mandatory information required by IEC, UL and CSA standards (Copper conductors). All other data are provided as supplementary information only. For more details, please consult our CB, UL or CSA certificates and technical datasheet available on http://www.TE.com

CE | CB | RoHS | USR CNR | CSA | EAC | BV | DNV

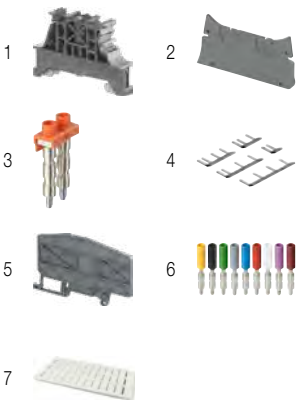

Accessories

	Description			Color	Type	Part Number		Pkg qty	Weight (1 pce) g
1	**End stops**	10 mm	0.394 in	Dark grey	BAM4	1SNK900001R0000		50	14.00
2	**End sections**	2 mm	0.079 in	Dark grey	ES10-ST	1SNK508910R0000		20	3.5
3	**Jumper bars**	2 poles	50 A (IEC)	Orange	JB8-2-R1	1SNK908902R0000		10	7.6
		3 poles	50 A (IEC)		JB8-3-R1	1SNK908903R0000		10	11.6
		4 poles	50 A (IEC)		JB8-4-R1	1SNK908904R0000		10	15.5
		5 poles	50 A (IEC)		JB8-5-R1	1SNK908905R0000		10	19.4
		10 poles	50 A (IEC)		JB8-10-R1	1SNK908910R0000		10	39.00
4	**Lateral jumper bars**	4/7 poles		Black	PC8-R5	1SNA400842R0000		10	6.60
		2/3 poles			PC8-R6	1SNA400843R0000		10	6.60
		4/6 poles			PC8-R7	1SNA400849R0000		10	6.60
		4/8 poles			PC8-R8	1SNA400850R0000		10	7.80
5	**Circuit separators**	3 mm	0.118 in	Dark grey	CS-R3	1SNK900107R0000		20	6.40
6	**Test sockets**	Test sockets DIA 4 mm 0.157 in		Yellow	AJS9	1SNA179726R0200		25	3.60
7	**Terminal block markers**	Blank marker		White	MG-CPM 13 41791	1SNB041791R0612		1680	0.27
		Blank card			MC812	1SNK160000R0000		22	10.00
					MC812PA	1SNK169999R0000		20	14.00
		Universal wire markers holder		Grey	UMH	1SNK900611R0000		10	0.20

Complete list of accessories is indicated in the terminal block datasheet including end stops.
Some accessories such as jumper bars may modify the terminal block's ratings: Complete information available in the accessories section of the catalog.

1SNK161058S0201

Technical data valid for copper conductors only.

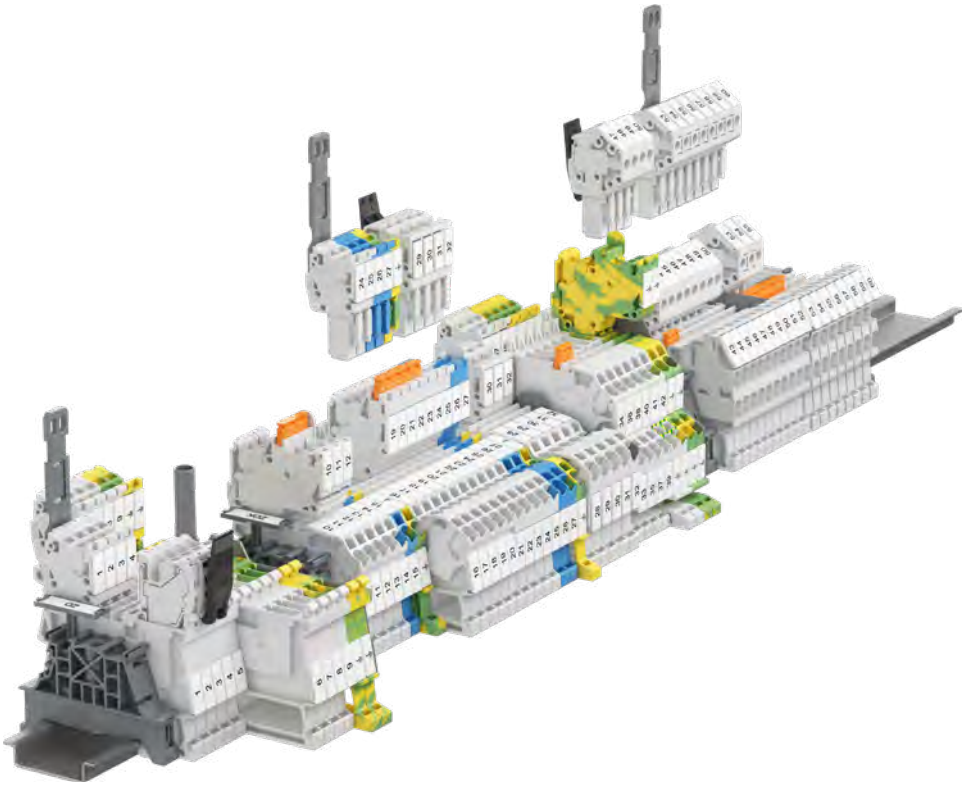

SNK series, terminal blocks
Pluggable technology

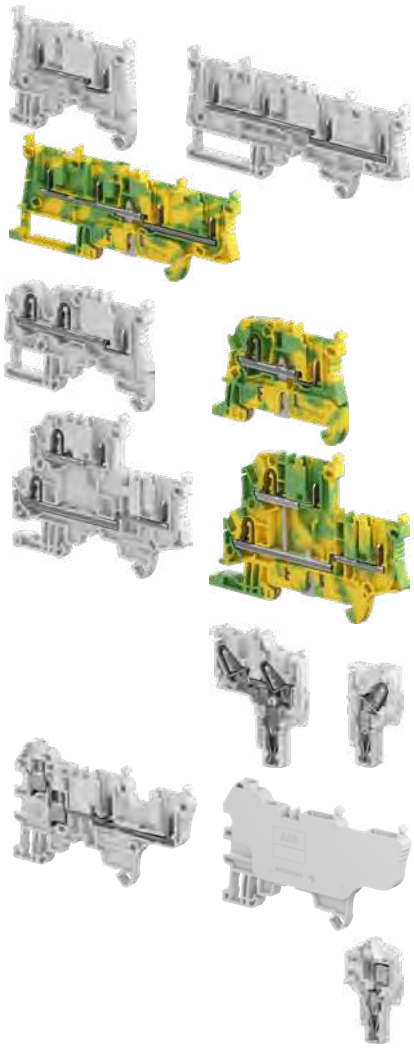

Technologies presentation			162
Overview			168

PI-Spring Pluggable

Pluggable Pluggable

2.5 mm² / 12 AWG	Feed-through	**ZD2.5-11**	172
		ZD2.5-22	173
	Ground	**ZD2.5-22-PE**	174

PI-Spring Pluggable

2.5 mm² / 12 AWG	Feed-through	**ZDK2.5-11**	175
		ZDK2.5-21	176
		ZDK2.5-22	177
4 mm² / 10 AWG	Feed-through	**ZDK4-22**	178
2.5 mm² / 12 AWG	Ground	**ZDK2.5-11-PE**	179
		ZDK2.5-22-PE	180
	Double deck	**ZDK2.5-D2**	181
		ZDK2.5-D1	182
		ZDK2.5-D2-PE	183
		ZDK2.5-D1-PE	184
PI-Spring female plugs		**CDK2.5**	185
		CDK2.5-J	186
		CDK2.5-2P-J	187
		CDK4	188

Screw clamp Pluggable

4 mm² / 10 AWG	Feed-through	**ZDS4-22**	190
		ZDS4-22-R1	192
Screw clamp female plugs		**CDS4**	191
		CDS4-R1	193

The SNK series pluggable terminal blocks combine the benefits of our smart connections with the flexibility of the pluggable function.

PI-Spring Pluggable

PI-Spring Pluggable

Pluggable Pluggable

Screw clamp Pluggable

Speed up your projects

Modularity brings assembly flexibility

Pluggable technology brings modularity into the electrical installation allowing the combination of sub-assemblies and prewired harnesses that facilitate and considerably accelerate assembly test and factory commissioning.

Better project identification

– Circuit identification is improved thanks to the 20% larger marking area
– Pre-mark by hand or with label on our flat marking surface and start immediately the wiring, before the final markers mounting
– Spare markers re-printing in case of modifications.

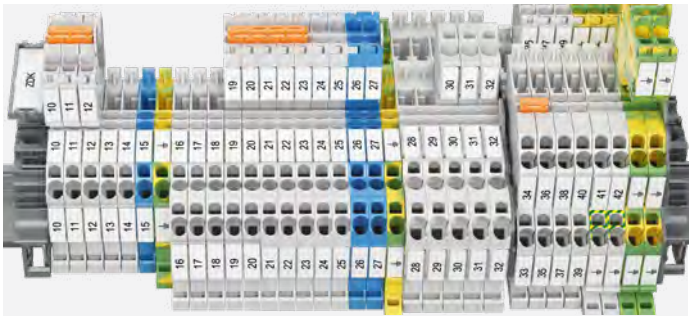

Clear circuit identification

1SNK164014S0201 - Rev. A

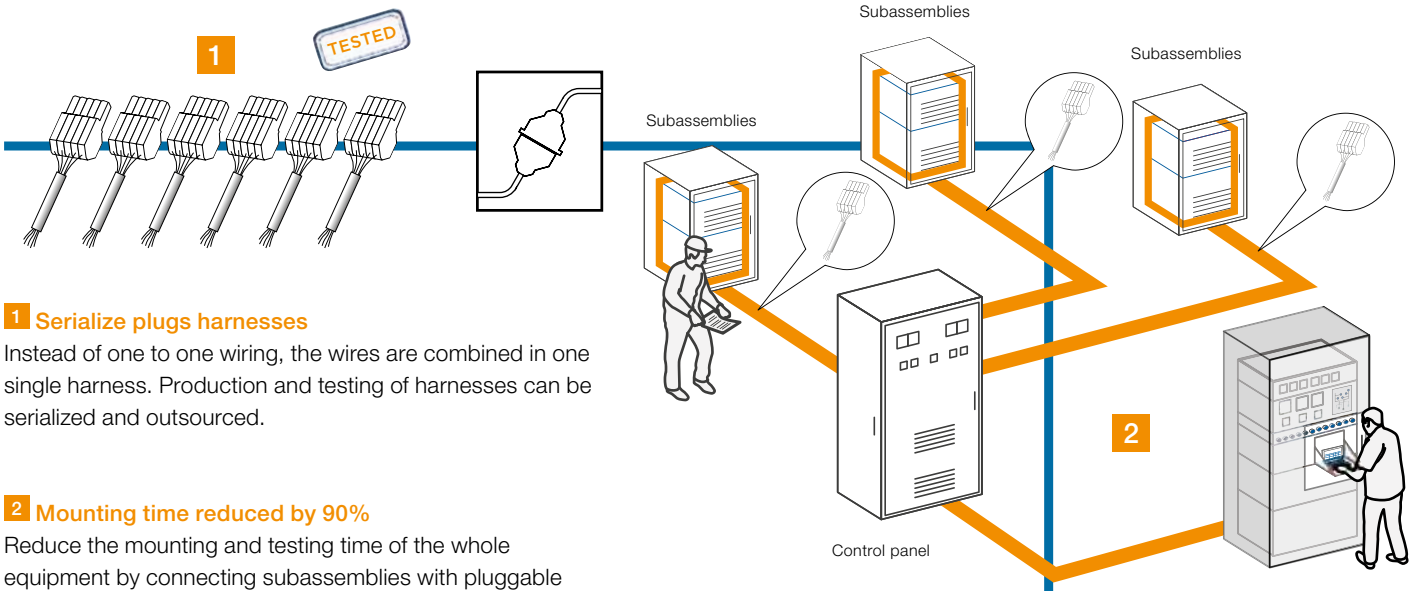

1 Serialize plugs harnesses

Instead of one to one wiring, the wires are combined in one single harness. Production and testing of harnesses can be serialized and outsourced.

2 Mounting time reduced by 90%

Reduce the mounting and testing time of the whole equipment by connecting subassemblies with pluggable terminal blocks and harnesses. Ease the factory commissioning.

3 Disconnect for transportation

Easily disconnect the harnesses if needed for convenient transportation of big equipment.

4 Quickly secure on-site reconnection

Secure oan-site installation: final reconnection is done in few quick steps and fully secured thanks to error-free coding system. Facilitate the final commissioning.

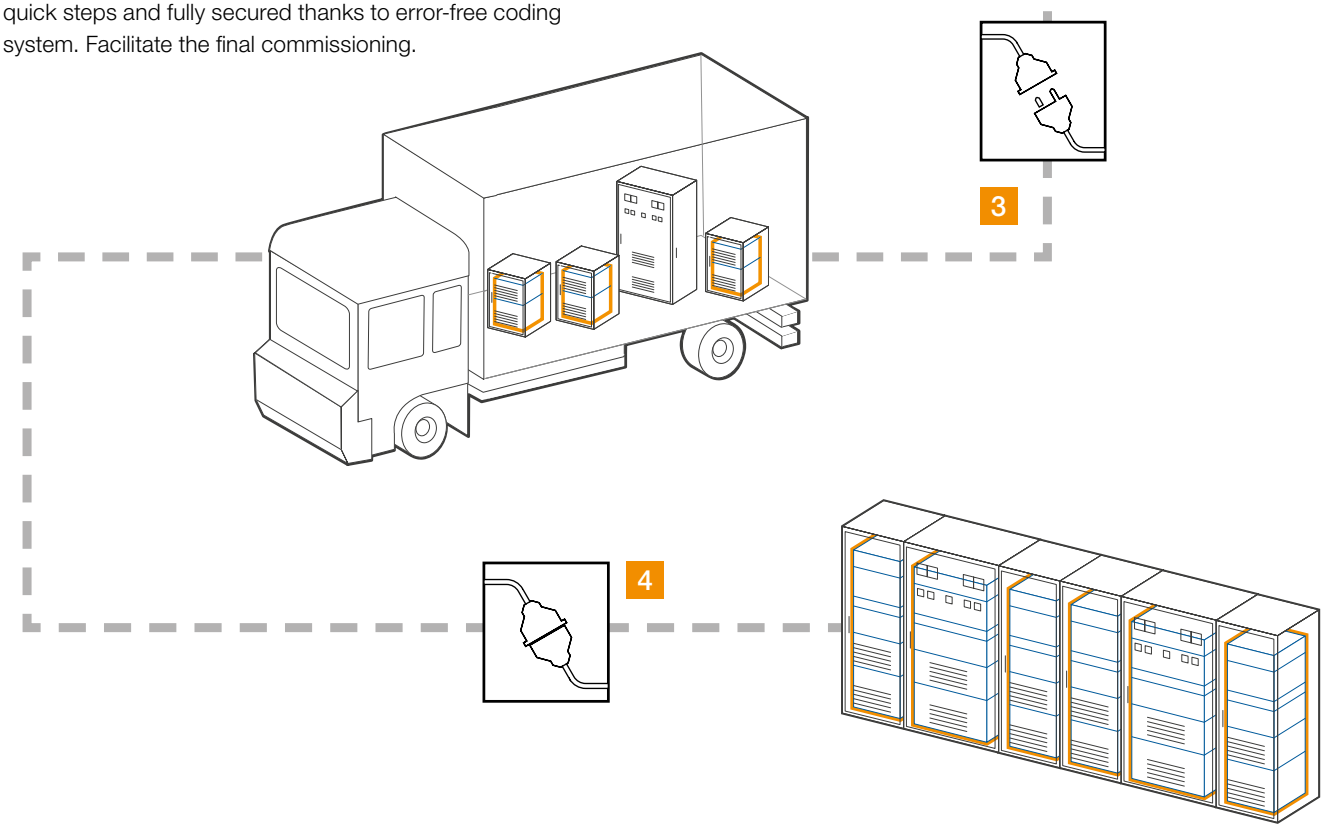

1SNK164014S0201 - Rev. A

Easy to install

Smart design facilitating assembly process

Mounting, wiring, testing… made easy.

Create your own assemblies without tooling:

– Easily snap together multiple plugs

– Eliminate stock of pre-configured plugs.

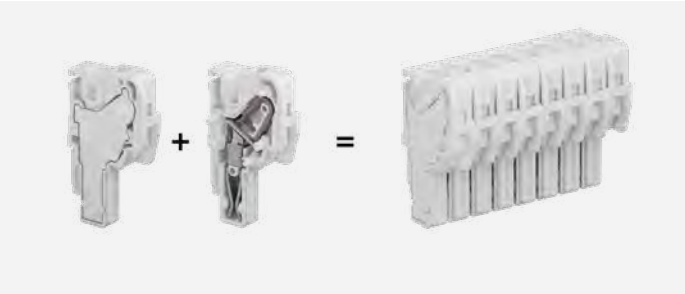

Only two plug variants are required to compose harnesses up to 15 poles

Some plugs feature a jumper channel and/or 2 connections that ease the signal distribution or wiring daisy chaining of subassemblies.

Easy signal distribution on plugs

Safety and protection

Eliminate connection errors with coding pegs:

– Simply insert the pegs to create a coding sequence.

Secure your wiring against accidental tearing:

– Automatic locking function

– Lock safely 2 to 8 plugs with only one locking device

– Cable clamp secures the wires onto the plug when pulling the plug assembly.

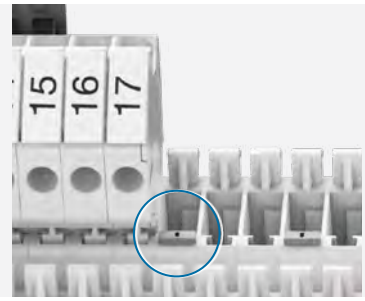

Convenient coding pegs

Cable clamp & locking device

1SNK164014S0201 - Rev. A

Faster accessories mounting

Save up to 70% mounting time thanks to:

– Screwless jumpers, component plugs, test devices, end stops and snap-in ground terminal blocks.

Closed jumper location allows great stiffness of the terminal block, avoid deflection while tightening and optimal jumper guiding.

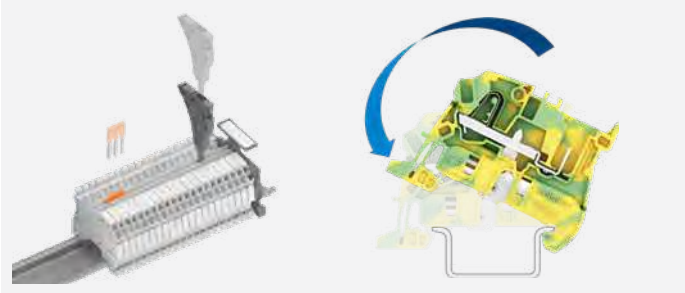

Screwless accessories **Snap-in ground terminal blocks**

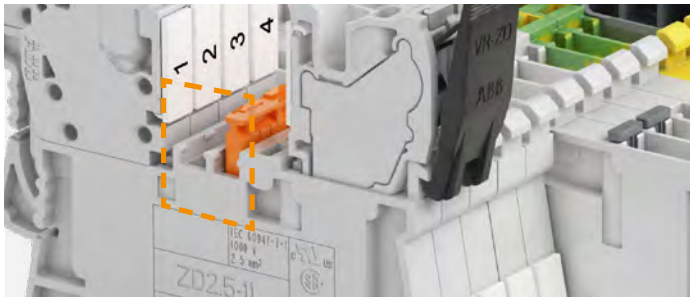

Closed jumper location for stiffness

Smart accessories

Flexible test solutions from individual insulated test adapter to test connectors for complete assemblies testing.

– Direct plug-in into jumpers channels

– 5, 6, 8 mm spacing, mixing various spacing is possible

– 1000 V rating.

Smart plug-in jumpers

Pre-cut poles removable by hand: clean cut.

Insulated up to 1000 V (avoid use of separators).

Predefined shapes in molding to easily identify connected poles with a pen.

Plug-in individual test adapter **Plug-in test connector**

Pre-cut poles easy removable by hand **Predefined shape to identify connected poles**

1SNK164014S0201 - Rev. A

Optimized logistics

Reduce your accessories inventory by up to 50%

SNK PI-Spring, screw and pluggable ranges share the same accessories.

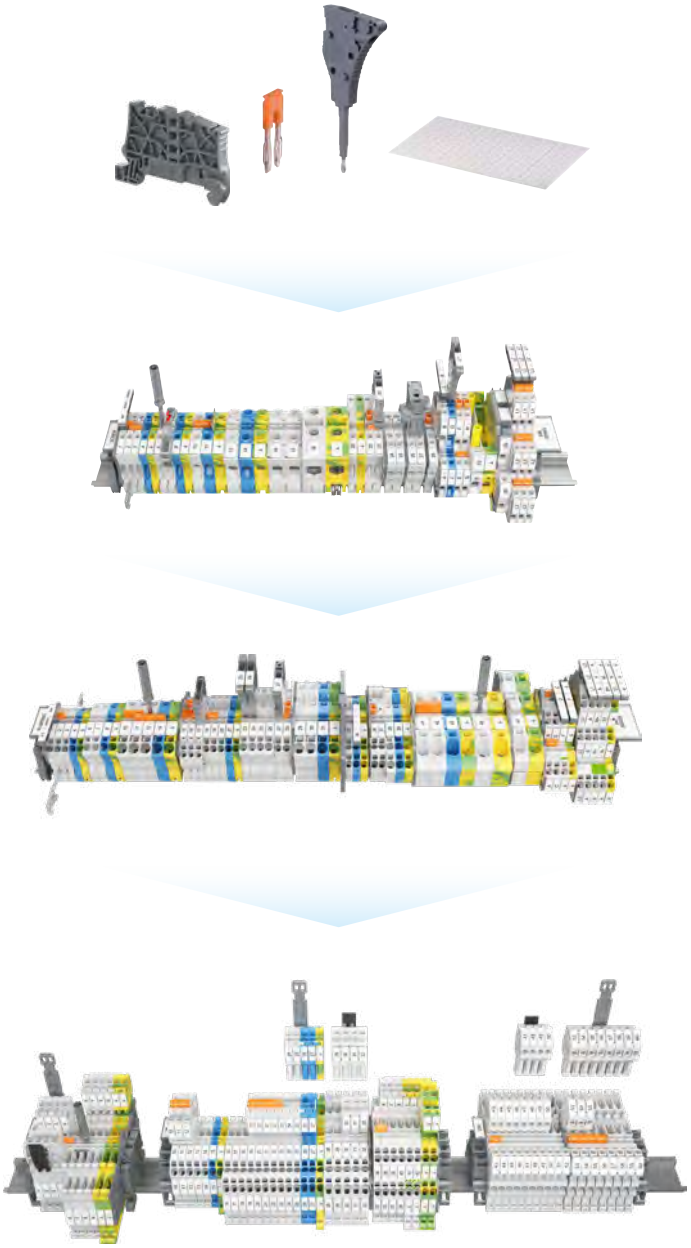

Shared accessories for SNK PI-Spring, screw and pluggable ranges

Facilitate maintenance operations

Terminal blocks can be individually removed from a terminal assembly equipped with markers: TE Connectivity markers become independent after strip mounting. The markers remain on terminal in any situation.
Markers are interchangable: the smaller marker can fit any bigger block.

Maintenance operations facilitated

Reliable in harsh conditions

Qualified for worldwide markets, applications and for severe environments: vibration, shock, corrosion…

1SNK164014S0201 - Rev. A

1SNK164014S0201 - Rev. A

SNK series, terminal blocks

Pluggable technology - Range overview from 2.5 to 4 mm² – 12 to 10 AWG

PI-Spring Pluggable

Pluggable Pluggable

2 Connections
Single deck
Feed-through

4 Connections
Single deck
Feed-through
Ground

PI-Spring Pluggable

2 Connections
Single deck
Feed-through
Ground

3 Connections
Single deck
Feed-through

4 Connections
Single deck
Feed-through
Ground

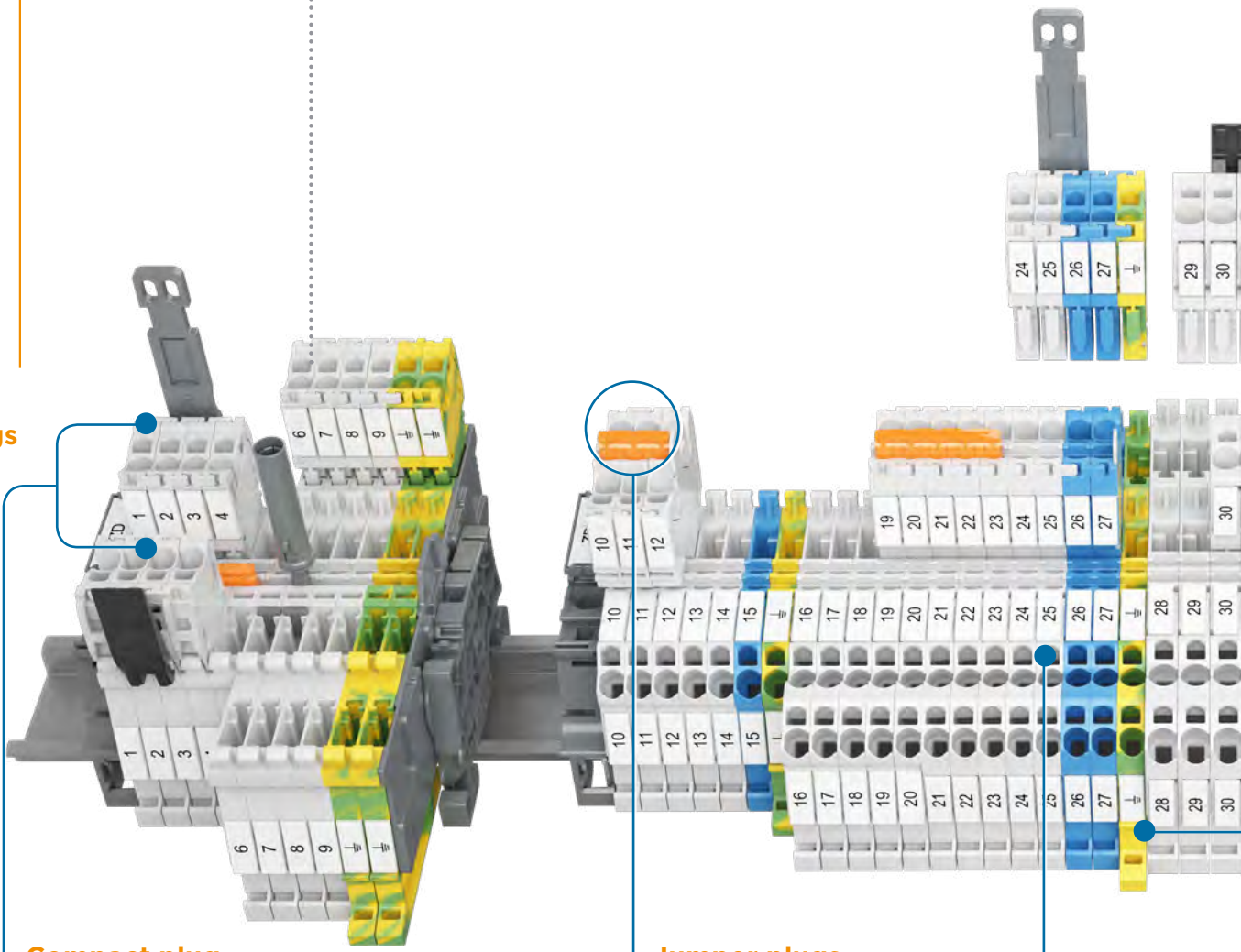

Plugs

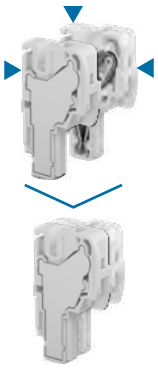

Compact plug
Save up to 15% in height

Reduced plug variants
Only two plugs variants to create assemblies

Jumper plugs
Plugs with 1 or 2 connection & jumper to ease potential distribution

Voltage test
Screwdriver entry point accepts category II probes

Screw clamp Pluggable

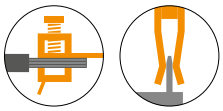

2x2
Connections
Double deck
Feed-through
Ground

4
Connections
Single deck
Feed-through

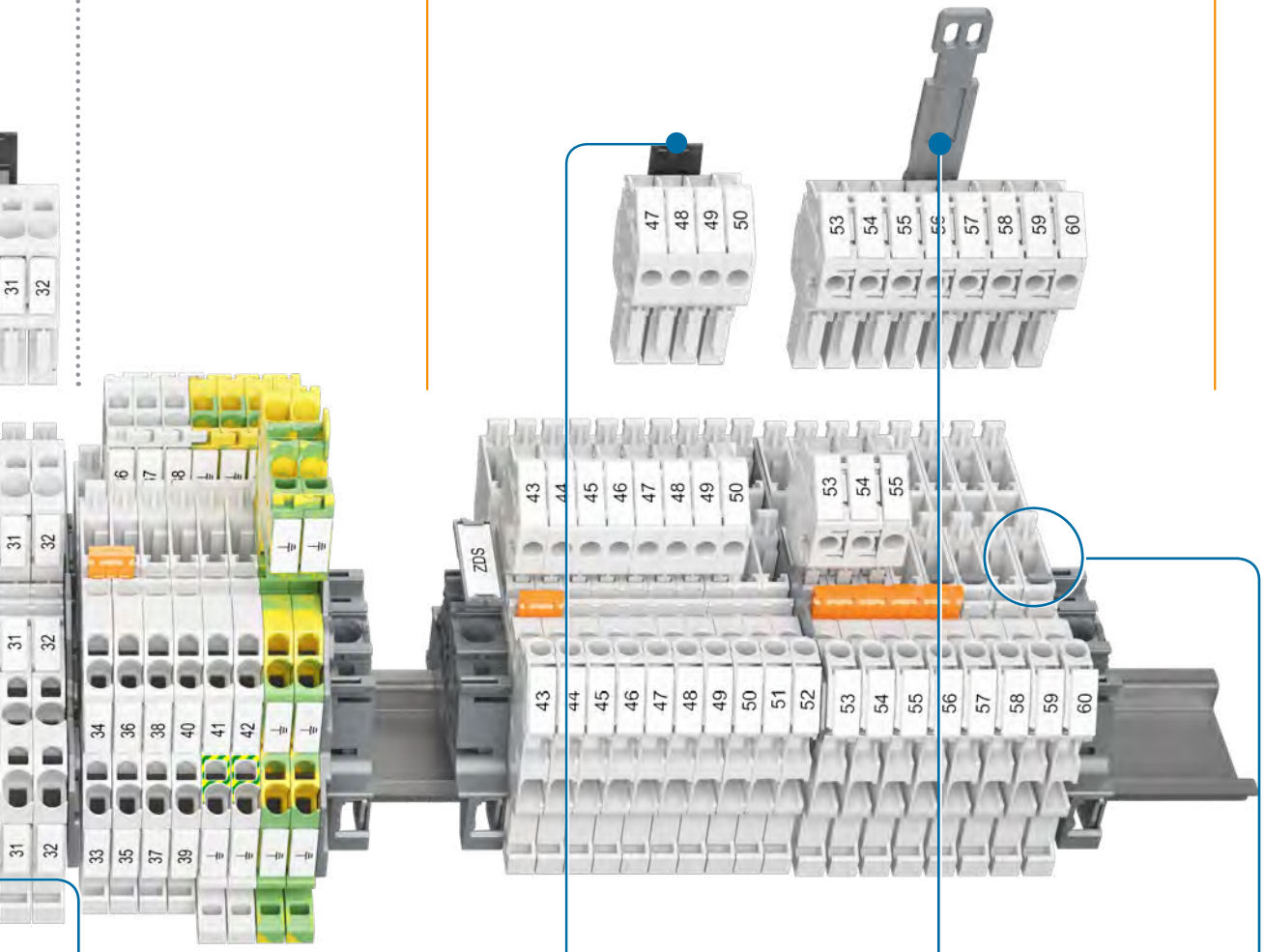

End section
No need of end section between 2.5 and 4 mm² terminal blocks

Cable clamp
Secure the wires ontov the plug when pulling the plug assembly

Locking device
Secure plug and wiring against accidental pulling

Convenient coding pegs
Guarantee error free plugs insertion

1SNK164013S0201

PI-Spring Pluggable

Single deck

Section		Feed-through		Ground	Feed-through			Ground	
2.5 mm²	12 AWG	ZD2.5-11	ZD2.5-22	ZD2.5-22-PE	ZDK2.5-11	ZDK2.5-21	ZDK2.5-22	ZDK2.5-11-PE	ZDK2.5-22-PE
4 mm²	10 AWG						ZDK4-22		

Double deck

Section		Feed-through		Feed-through + ground	Ground
2.5 mm²	12 AWG	ZDK2.5-D2	ZDK2.5-D1	ZDK2.5-D2-PE	ZDK2.5-D1-PE
4 mm²	10 AWG				

PI-Spring female plugs

Section		Closed		Closed		Closed		Closed		Closed		Closed	
2.5 mm²	12 AWG	CDK2.5	CDK2.5-E	CDK2.5-J	CDK2.5-J-E	CDK2.5-2P-J	CDK2.5-2P-J-E	CDK2.5-PE	CDK2.5-PE-E	CDK2.5-J-PE	CDK2.5-J-PE-E	CDK2.5-2P-J-PE	CDK2.5-2P-J-PE
4 mm²	10 AWG	CDK4	CDK4-E										

Screw clamp Pluggable

Single deck

Section		Feed-through
4 mm²	10 AWG	ZDS4-22 ZDS4-22-R1

Screw clamp female plugs

Section		Closed	
4 mm²	10 AWG	CDS4 CDS4-R1	CDS4-E

clamp - Channels for jumpering or testing - test socket - Blown-fuse indicator - male pluggable clamp - female pluggable clamp

1SNK164018S0201

PI-Spring Pluggable

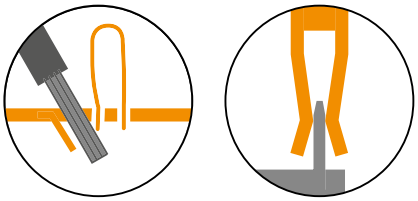

ZD2.5-11 PI-Spring pluggable terminal blocks

Feed-through - 5.2 mm 0.205 in spacing

2.5 mm²

12 AWG

ZD2.5-11

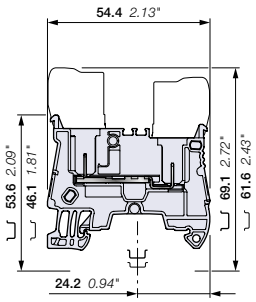

5.2 mm 0.205 in spacing

CDK2.5 CDK2.5-E

Description

- Increase your productivity with pluggable terminal blocks: possibility of pre-produced plugs harnesses, time saving plug and play assembly, reduced transportation panels preparation and final installation, easily connect sub-assemblies together,
- Simplify and secure your installation: in site faulty connection errors are eliminated, prior connection testing is eased and reliable, test connectors (TC5) withstanding 10 000 operations are compatible for convenient testing.

Ordering details

Description		Color	Type	Part Number		Pkg qty	Weight (1 pce) g
Feed-through	2 connections	Grey	ZD2.5-11	1SNK805016R0000		50	5.66

Main technical data

Connecting capacity		IEC	UL - CSA
1 conductor per clamp	Rigid: Solid/Stranded	0.2 ... 4 mm²	26 ... 12 AWG
	Flexible without ferrule	0.22 ... 2.5 mm²	
	Flexible with non insulated ferrule	0.22 ... 2.5 mm²	26 ... 14 AWG
	Flexible with insulated ferrule	0.22 ... 2.5 mm²	26 ... 14 AWG
2 conductors per clamp	Flexible with twin ferrule	0.22 ... 0.5 mm²	26 ... 20 AWG
Rated current / Rated cross section		22 A / 2.5 mm²	20 A / 12 AWG
Rated short-time withstand current (1s)		300 A	
Rated voltage		1000 V	600 V
Impulse withstand voltage		8000 V	
Protection		IP20	NEMA 1

Mounting instructions

Rail		TH 35-7.5, TH 35-15
Wire stripping length		11 mm 0.433 in
Tool (for flexible conductor without ferrule)		Ø 3.5 mm Ø 0.138 in

The connecting capacity data for one Rigid: Solid/Stranded, or one Flexible conductor (when applicable) is a mandatory information required by IEC, UL and CSA standards (Copper conductors). All other data are provided as supplementary information only. For more details, please consult our CB, UL or CSA certificates and technical datasheet available on http://www.TE.com

CE CB RoHS USR CNR CSA EAC BV

Female plugs

Description		Color	Type	Part Number		Pkg qty	Weight (1 pce) g
Female plugs	1 pole	Grey	CDK2.5	1SNK805712R0000		50	2.80
Female plugs without outer nubs - Closed	1 pole		CDK2.5-E	1SNK805713R0000		50	2.88

15 poles max.

Accessories

	Description			Color	Type	Part Number		Pkg qty	Weight (1 pce) g
1	**End stops**	5.2 mm	0.205 in	Dark grey	BAZ1	1SNK900002R0000		50	5.30
2	**End sections**	1.5 mm	0.059 in	Dark grey	EDK2.5-11	1SNK805915R0000		20	1.49
3	**Jumper bars**	2 poles	32 A (IEC)	Orange	JB5-2	1SNK905302R0000		50	1.30
		3 poles	32 A (IEC)		JB5-3	1SNK905303R0000		50	2.00
		4 poles	32 A (IEC)		JB5-4	1SNK905304R0000		50	2.70
		5 poles	32 A (IEC)		JB5-5	1SNK905305R0000		50	3.50
		10 poles	32 A (IEC)		JB5-10	1SNK905310R0000		30	7.10
		50 poles	32 A (IEC)		JB5-50	1SNK905350R0000		10	36.00
4	**Cross spacing jumpers**	3 poles	32 A (IEC)	Orange	JB85-3	1SNK900603R0000		10	2.80
5	**Circuit separators**	3 mm	0.118 in	Dark grey	CS-R2	1SNK900106R0000		20	3.80
6	**Test adapters**	For test plugs DIA 2 mm 0.079 in		Dark grey	TP2	1SNK900203R0000		20	1.70
		For test plugs DIA 4 mm 0.157 in			TP4	1SNK900205R0000		20	2.40
7	**Test connectors**	5.2 mm 0.205 in spacing		Dark grey	TC5	1SNK900200R0000		10	5.20
		End module, 5.2 mm 0.205 in			TC5-R1	1SNK900201R0000		10	5.20
8	**Coding pegs**			Dark grey	COP-ZD	1SNK900636R0000		10	3.57
9	**Terminal block markers**	Blank card		White	MC512	1SNK140000R0000		22	9.00
					MC512PA	1SNK149999R0000		20	10.00
		Blank marker			MG-CPM 13 41790	1SNB041790R0512		1960	0.236
		Universal wire markers holder		Grey	UMH	1SNK900611R0000		10	0.20

Complete list of accessories is indicated in the terminal block datasheet including end stops.
Some accessories such as jumper bars may modify the terminal block's ratings: Complete information available in the accessories section of the catalog.

Technical data valid for copper conductors only.

1SNK164020S0201

ZD2.5-22 PI-Spring pluggable terminal blocks

Feed-through - 5.2 mm 0.205 in spacing

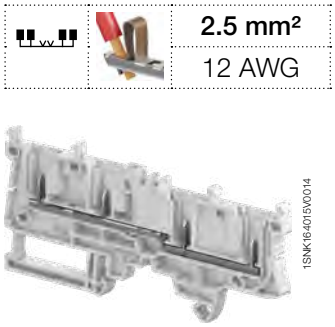

ZD2.5-22

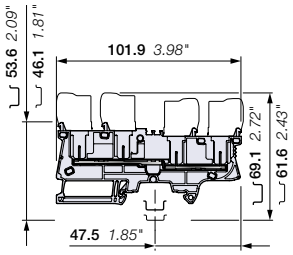

5.2 mm 0.205 in spacing

CDK2.5 CDK2.5-E

2.5 mm²

12 AWG

Description

- Increase your productivity with pluggable terminal blocks: possibility of pre-produced plugs harnesses, time saving plug and play assembly, reduced transportation panels preparation and final installation, easily connect sub-assemblies together,
- Simplify and secure your installation: in site faulty connection errors are eliminated, prior connection testing is eased and reliable, test connectors (TC5) withstanding 10 000 operations are compatible for convenient testing.

Ordering details

Description		Color	Type	Part Number		Pkg qty	Weight (1 pce) g
Feed-through	4 connections	Grey	ZD2.5-22	1SNK805017R0000		50	12.00

Main technical data

Connecting capacity		IEC	UL - CSA
1 conductor per clamp	Rigid: Solid/Stranded	0.2 ... 4 mm²	26 ... 12 AWG
	Flexible without ferrule	0.22 ... 2.5 mm²	
	Flexible with non insulated ferrule	0.22 ... 2.5 mm²	26 ... 14 AWG
	Flexible with insulated ferrule	0.22 ... 2.5 mm²	26 ... 14 AWG
2 conductors per clamp	Flexible with twin ferrule	0.22 ... 0.5 mm²	26 ... 20 AWG
Rated current / Rated cross section		22 A / 2.5 mm²	20 A / 12 AWG
Rated short-time withstand current (1s)		300 A	
Rated voltage		1000 V	600 V
Impulse withstand voltage		8000 V	
Protection		IP20	NEMA 1

Mounting instructions

Rail		TH 35-7.5, TH 35-15
Wire stripping length		11 mm 0.433 in
Tool (for flexible conductor without ferrule)		Flat screwdriver Ø 3.5 mm Ø 0.138 in

The connecting capacity data for one Rigid: Solid/Stranded, or one Flexible conductor (when applicable) is a mandatory information required by IEC, UL and CSA standards (Copper conductors). All other data are provided as supplementary information only. For more details, please consult our CB, UL or CSA certificates and technical datasheet available on http://www.TE.com

CE CB RoHS USR CNR CSA EAC BV

Female plugs

Description		Color	Type	Part Number		Pkg qty	Weight (1 pce) g
Female plugs	1 pole	Grey	CDK2.5	1SNK805712R0000		50	2.80
Female plugs without outer nubs - Closed	1 pole		CDK2.5-E	1SNK805713R0000		50	2.88

15 poles max.

Accessories

	Description			Color	Type	Part Number		Pkg qty	Weight (1 pce) g
1	**End stops**	5.2 mm	0.205 in	Dark grey	BAZ1	1SNK900002R0000		50	5.30
2	**End sections**	2.0 mm	0.079 in	Dark grey	ED2.5-22	1SNK805917R0000		20	3.64
3	**Jumper bars**	2 poles	32 A (IEC)	Orange	JB5-2	1SNK905302R0000		50	1.30
		3 poles	32 A (IEC)		JB5-3	1SNK905303R0000		50	2.00
		4 poles	32 A (IEC)		JB5-4	1SNK905304R0000		50	2.70
		5 poles	32 A (IEC)		JB5-5	1SNK905305R0000		50	3.50
		10 poles	32 A (IEC)		JB5-10	1SNK905310R0000		30	7.10
		50 poles	32 A (IEC)		JB5-50	1SNK905350R0000		10	36.00
4	**Cross spacing jumpers**	3 poles	32 A (IEC)	Orange	JB85-3	1SNK900603R0000		10	2.80
5	**Circuit separators**	3 mm	0.118 in	Dark grey	CS-R3	1SNK900107R0000		20	6.40
6	**Test adapters**	For test plugs DIA 2 mm 0.079 in		Dark grey	TP2	1SNK900203R0000		20	1.70
		For test plugs DIA 4 mm 0.157 in			TP4	1SNK900205R0000		20	2.40
7	**Test connectors**	5.2 mm 0.205 in spacing		Dark grey	TC5	1SNK900200R0000		10	5.20
		End module, 5.2 mm 0.205 in			TC5-R1	1SNK900201R0000		10	5.20
8	**Coding pegs**			Dark grey	COP-ZD	1SNK900636R0000		10	3.57
9	**Terminal block markers**	Blank card		White	MC512	1SNK140000R0000		22	9.00
					MC512PA	1SNK149999R0000		20	10.00
		Blank marker			MG-CPM 13 41790	1SNB041790R0512		1960	0.236
		Universal wire markers holder		Grey	UMH	1SNK900611R0000		10	0.20

Complete list of accessories is indicated in the terminal block datasheet including end stops.
Some accessories such as jumper bars may modify the terminal block's ratings: Complete information available in the accessories section of the catalog.

Technical data valid for copper conductors only.

1SNK164021S0201

4

ZD2.5-22-PE PI-Spring pluggable terminal blocks

Ground - 5.2 mm 0.205 in spacing

2.5 mm²

12 AWG

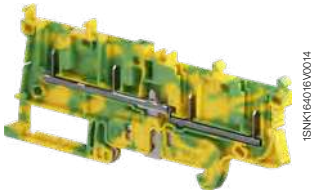

1SNK164016V0014

ZD2.5-22-PE

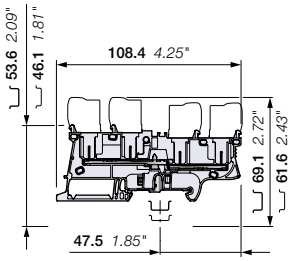

5.2 mm 0.205 in spacing

Description

- Increase your productivity with pluggable terminal blocks: possibility of pre-produced plugs harnesses, time saving plug and play assembly, reduced transportation panels preparation and final installation, easily connect sub-assemblies together,
- Simplify and secure your installation: in site faulty connection errors are eliminated, prior connection testing is eased and reliable, test connectors (TC5) withstanding 10 000 operations are compatible for convenient testing.

Ordering details

Description		Color	Type	Part Number		Pkg qty	Weight (1 pce) g
Ground	4 connections	Green-yellow	ZD2.5-22-PE	1SNK805156R0000		50	14.80

Main technical data

Connecting capacity		IEC	UL - CSA
1 conductor per clamp	Rigid: Solid/Stranded	0.2 ... 4 mm²	26 ... 12 AWG
	Flexible without ferrule	0.22 ... 2.5 mm²	
	Flexible with non insulated ferrule	0.22 ... 2.5 mm²	26 ... 14 AWG
	Flexible with insulated ferrule	0.22 ... 2.5 mm²	26 ... 14 AWG
Rated cross section		2.5 mm²	12 AWG
Rated short-time withstand current (1s)		300 A	396 A
Protection		IP20	NEMA 1

Mounting instructions

Rail		TH 35-7.5, TH 35-15
Wire stripping length		11 mm 0.433 in
Tool (for flexible conductor without ferrule)		Flat screwdriver Ø 3.5 mm Ø 0.138 in

The connecting capacity data for one Rigid: Solid/Stranded, or one Flexible conductor (when applicable) is a mandatory information required by IEC, UL and CSA standards (Copper conductors). All other data are provided as supplementary information only. For more details, please consult our CB, UL or CSA certificates and technical datasheet available on http://www.TE.com

CE CB RoHS USR CNR CSA EAC BV

CDK2.5-PE CDK2.5-PE-E

Female plugs

Description		Color	Type	Part Number		Pkg qty	Weight (1 pce) g
Female plugs	1 pole	Green-yellow	CDK2.5-PE	1SNK805750R0000		50	2.80
Female plugs without outer nubs - Closed	1 pole		CDK2.5-PE-E	1SNK805753R0000		50	2.88

15 poles max.

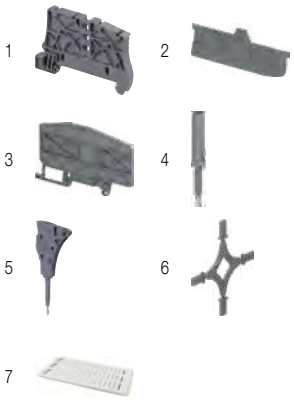

Accessories

	Description			Color	Type	Part Number		Pkg qty	Weight (1 pce) g
1	**End stops**	5.2 mm	0.205 in	Dark grey	BAZ1	1SNK900002R0000		50	5.30
2	**End sections**	2.0 mm	0.079 in	Dark grey	ED2.5-22	1SNK805917R0000		20	3.64
3	**Circuit separators**	3 mm	0.118 in	Dark grey	CS-R3	1SNK900107R0000		20	6.40
4	**Test adapters**	For test plugs DIA 2 mm 0.079 in		Dark grey	TP2	1SNK900203R0000		20	1.70
		For test plugs DIA 4 mm 0.157 in			TP4	1SNK900205R0000		20	2.40
5	**Test connectors**	5.2 mm 0.205 in spacing		Dark grey	TC5	1SNK900200R0000		10	5.20
		End module, 5.2 mm 0.205 in			TC5-R1	1SNK900201R0000		10	5.20
6	**Coding pegs**			Dark grey	COP-ZD	1SNK900636R0000		10	3.57
7	**Terminal block markers**	Blank card		White	MC512	1SNK140000R0000		22	9.00
					MC512PA	1SNK149999R0000		20	10.00
		Blank marker			MG-CPM 13 41790	1SNB041790R0512		1960	0.236
		Universal wire markers holder		Grey	UMH	1SNK900611R0000		10	0.20

Complete list of accessories is indicated in the terminal block datasheet including end stops.
Some accessories such as jumper bars may modify the terminal block's ratings: Complete information available in the accessories section of the catalog.

Technical data valid for copper conductors only.

1SNK164022S0201

ZDK2.5-11 PI-Spring pluggable terminal blocks

Feed-through - 5.2 mm 0.205 in spacing

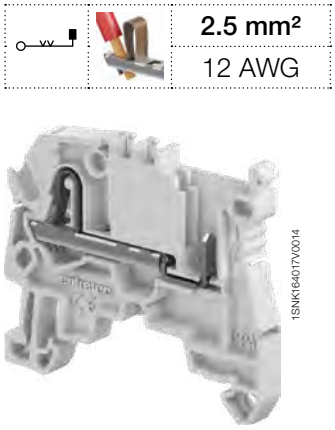

2.5 mm²
12 AWG

1SNK164017V0014

ZDK2.5-11

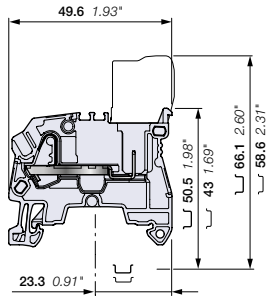

5.2 mm 0.205 in spacing

CDK2.5 CDK2.5-E CDK2.5-BL CDK2.5-BL-E

Description

- Increase your productivity with pluggable terminal blocks: possibility of pre-produced plugs harnesses, time saving plug and play assembly, reduced transportation panels preparation and final installation, easily connect sub-assemblies together,
- Simplify and secure your installation: in site faulty connection errors are eliminated, prior connection testing is eased and reliable, test connectors (TC5) withstanding 10 000 operations are compatible for convenient testing.

Ordering details

Description		Color	Type	Part Number		Pkg qty	Weight (1 pce) g
Feed-through	2 connections	Grey	ZDK2.5-11	1SNK805015R0000		50	7.00
		Blue	ZDK2.5-11-BL	1SNK805025R0000		50	7.00

Main technical data

Connecting capacity		IEC	UL - CSA
1 conductor per clamp	Rigid: Solid/Stranded	0.2 ... 4 mm²	26 ... 12 AWG
	Flexible without ferrule	0.22 ... 2.5 mm²	
	Flexible with non insulated ferrule	0.22 ... 2.5 mm²	26 ... 14 AWG
	Flexible with insulated ferrule	0.22 ... 2.5 mm²	26 ... 14 AWG
2 conductors per clamp	Flexible with twin ferrule	0.22 ... 0.5 mm²	26 ... 20 AWG
Rated current / Rated cross section		24 A / 2.5 mm²	20 A / 12 AWG
Rated short-time withstand current (1s)		300 A	
Rated voltage		1000 V	600 V
Impulse withstand voltage		8000 V	
Protection		IP20	NEMA 1

Mounting instructions

Rail		TH 35-7.5, TH 35-15
Wire stripping length		11 mm 0.433 in
Tool (for flexible conductor without ferrule)		Flat screwdriver Ø 3.5 mm Ø 0.138 in

The connecting capacity data for one Rigid: Solid/Stranded, or one Flexible conductor (when applicable) is a mandatory information required by IEC, UL and CSA standards (Copper conductors). All other data are provided as supplementary information only. For more details, please consult our CB, UL or CSA certificates and technical datasheet available on http://www.TE.com

CE CB RoHS USR CNR CSA EAC BV

Female plugs

Description		Color	Type	Part Number		Pkg qty	Weight (1 pce) g
Female plugs	1 pole	Grey	CDK2.5	1SNK805712R0000		50	2.80
Female plugs without outer nubs - Closed	1 pole		CDK2.5-E	1SNK805713R0000		50	2.88
Female plugs	1 pole	Blue	CDK2.5-BL	1SNK805742R0000		50	2.80
Female plugs without outer nubs - Closed	1 pole		CDK2.5-BL-E	1SNK805743R0000		50	2.88

15 poles max.

Accessories

	Description			Color	Type	Part Number		Pkg qty	Weight (1 pce) g
1	**End stops**	5.2 mm	0.205 in	Dark grey	BAZ1	1SNK900002R0000		50	5.30
2	**End sections**	1.5 mm	0.059 in	Dark grey	EDK2.5-11	1SNK805915R0000		20	1.49
3	**Jumper bars**	2 poles	32 A (IEC)	Orange	JB5-2	1SNK905302R0000		50	1.30
		3 poles	32 A (IEC)		JB5-3	1SNK905303R0000		50	2.00
		4 poles	32 A (IEC)		JB5-4	1SNK905304R0000		50	2.70
		5 poles	32 A (IEC)		JB5-5	1SNK905305R0000		50	3.50
		10 poles	32 A (IEC)		JB5-10	1SNK905310R0000		30	7.10
		50 poles	32 A (IEC)		JB5-50	1SNK905350R0000		10	36.00
4	**Cross spacing jumpers**	3 poles	32 A (IEC)	Orange	JB85-3	1SNK900603R0000		10	2.80
5	**Circuit separators**	3 mm	0.118 in	Dark grey	CS-R2	1SNK900106R0000		20	3.80
6	**Test adapters**	For test plugs DIA 2 mm 0.079 in		Dark grey	TP2	1SNK900203R0000		20	1.70
		For test plugs DIA 4 mm 0.157 in			TP4	1SNK900205R0000		20	2.40
7	**Test connectors**	5.2 mm 0.205 in spacing		Dark grey	TC5	1SNK900200R0000		10	5.20
		End module, 5.2 mm 0.205 in			TC5-R1	1SNK900201R0000		10	5.20
8	**Coding pegs**			Dark grey	COP-ZD	1SNK900636R0000		10	3.57
9	**Terminal block markers**	Blank card		White	MC512	1SNK140000R0000		22	9.00
					MC512PA	1SNK149999R0000		20	10.00
		Blank marker			MG-CPM 13 41790	1SNB041790R0512		1960	0.236
		Universal wire markers holder		Grey	UMH	1SNK900611R0000		10	0.20

Complete list of accessories is indicated in the terminal block datasheet including end stops.
Some accessories such as jumper bars may modify the terminal block's ratings: Complete information available in the accessories section of the catalog.

Technical data valid for copper conductors only.

1SNK164023S0201

4

ZDK2.5-21 PI-Spring pluggable terminal blocks

Feed-through - 5.2 mm 0.205 in spacing

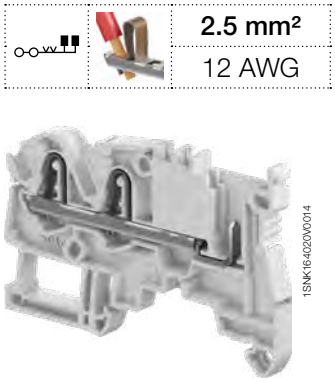

2.5 mm²
12 AWG

1SNK164020V0014

ZDK2.5-21

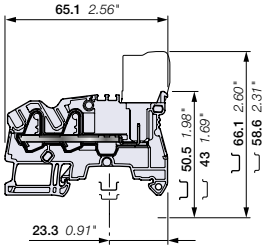

5.2 mm 0.205 in spacing

Description

- Increase your productivity with pluggable terminal blocks: possibility of pre-produced plugs harnesses, time saving plug and play assembly, reduced transportation panels preparation and final installation, easily connect sub-assemblies together,
- Simplify and secure your installation: in site faulty connection errors are eliminated, prior connection testing is eased and reliable, test connectors (TC5) withstanding 10 000 operations are compatible for convenient testing.

Ordering details

Description		Color	Type	Part Number		Pkg qty	Weight (1 pce) g
Feed-through	3 connections	Grey	ZDK2.5-21	1SNK805014R0000		50	7.47

Main technical data

Connecting capacity		IEC	UL - CSA
1 conductor per clamp	Rigid: Solid/Stranded	0.2 ... 4 mm²	26 ... 12 AWG
	Flexible without ferrule	0.22 ... 2.5 mm²	
	Flexible with non insulated ferrule	0.22 ... 2.5 mm²	26 ... 14 AWG
	Flexible with insulated ferrule	0.22 ... 2.5 mm²	26 ... 14 AWG
2 conductors per clamp	Flexible with twin ferrule	0.22 ... 0.5 mm²	26 ... 20 AWG
Rated current / Rated cross section		24 A / 2.5 mm²	20 A / 12 AWG
Rated short-time withstand current (1s)		300 A	
Rated voltage		1000 V	600 V
Impulse withstand voltage		8000 V	
Protection		IP20	NEMA 1

Mounting instructions

Rail		TH 35-7.5, TH 35-15
Wire stripping length		11 mm 0.433 in
Tool (for flexible conductor without ferrule)		Flat screwdriver Ø 3.5 mm Ø 0.138 in

The connecting capacity data for one Rigid: Solid/Stranded, or one Flexible conductor (when applicable) is a mandatory information required by IEC, UL and CSA standards (Copper conductors). All other data are provided as supplementary information only. For more details, please consult our CB, UL or CSA certificates and technical datasheet available on http://www.TE.com

CE CB RoHS USR CNR CSA EAC BV

CDK2.5 CDK2.5-E

Female plugs

Description		Color	Type	Part Number		Pkg qty	Weight (1 pce) g
Female plugs	1 pole	Grey	CDK2.5	1SNK805712R0000		50	2.80
Female plugs without outer nubs - Closed	1 pole		CDK2.5-E	1SNK805713R0000		50	2.88

15 poles max.

Accessories

	Description			Color	Type	Part Number		Pkg qty	Weight (1 pce) g
1	**End stops**	5.2 mm	0.205 in	Dark grey	BAZ1	1SNK900002R0000		50	5.30
2	**End sections**	1.5 mm	0.059 in	Dark grey	EDK2.5-21	1SNK805914R0000		20	1.90
3	**Jumper bars**	2 poles	32 A (IEC)	Orange	JB5-2	1SNK905302R0000		50	1.30
		3 poles	32 A (IEC)		JB5-3	1SNK905303R0000		50	2.00
		4 poles	32 A (IEC)		JB5-4	1SNK905304R0000		50	2.70
		5 poles	32 A (IEC)		JB5-5	1SNK905305R0000		50	3.50
		10 poles	32 A (IEC)		JB5-10	1SNK905310R0000		30	7.10
		50 poles	32 A (IEC)		JB5-50	1SNK905350R0000		10	36.00
4	**Cross spacing jumpers**	3 poles	32 A (IEC)	Orange	JB85-3	1SNK900603R0000		10	2.80
5	**Circuit separators**	3 mm	0.118 in	Dark grey	CS-R3	1SNK900107R0000		20	6.40
6	**Test adapters**	For test plugs DIA 2 mm 0.079 in		Dark grey	TP2	1SNK900203R0000		20	1.70
		For test plugs DIA 4 mm 0.157 in			TP4	1SNK900205R0000		20	2.40
7	**Test connectors**	5.2 mm 0.205 in spacing		Dark grey	TC5	1SNK900200R0000		10	5.20
		End module, 5.2 mm 0.205 in			TC5-R1	1SNK900201R0000		10	5.20
8	**Coding pegs**			Dark grey	COP-ZD	1SNK900636R0000		10	3.57
9	**Terminal block markers**	Blank card		White	MC512	1SNK140000R0000		22	9.00
					MC512PA	1SNK149999R0000		20	10.00
		Blank marker			MG-CPM 13 41790	1SNB041790R0512		1960	0.236
		Universal wire markers holder		Grey	UMH	1SNK900611R0000		10	0.20

Complete list of accessories is indicated in the terminal block datasheet including end stops.
Some accessories such as jumper bars may modify the terminal block's ratings: Complete information available in the accessories section of the catalog.

Technical data valid for copper conductors only.

1SNK164025S0201

ZDK2.5-22 PI-Spring pluggable terminal blocks

Feed-through - 5.2 mm 0.205 in spacing

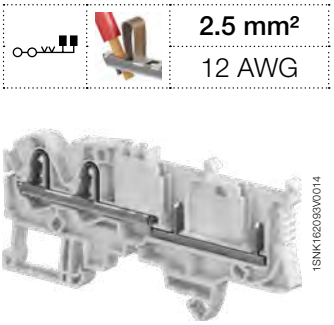

2.5 mm²
12 AWG

1SNK162093V0014

ZDK2.5-22

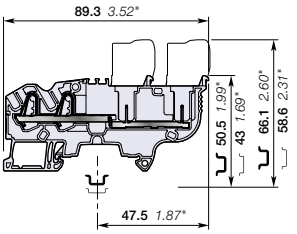

5.2 mm 0.205 in spacing

Description

- Increase your productivity with pluggable terminal blocks: possibility of pre-produced plugs harnesses, time saving plug and play assembly, reduced transportation panels preparation and final installation, easily connect sub-assemblies together,
- Simplify and secure your installation: in site faulty connection errors are eliminated, prior connection testing is eased and reliable, test connectors (TC5) withstanding 10 000 operations are compatible for convenient testing.

Ordering details

Description		Color	Type	Part number		Pkg qty	Weight (1 pce) g
Feed-through	4 connections	Grey	ZDK2.5-22	1SNK805010R0000		50	9.60
Feed-through	4 connections	Blue	ZDK2.5-22-BL	1SNK805020R0000		50	9.60

Main technical data

Connecting capacity		IEC	UL - CSA
1 conductor per clamp	Rigid: Solid/Stranded	0.2 ... 4 mm²	26 ... 12 AWG
	Flexible without ferrule	0.22 ... 2.5 mm²	
	Flexible with non insulated ferrule	0.22 ... 2.5 mm²	26 ... 14 AWG
	Flexible with insulated ferrule	0.22 ... 2.5 mm²	26 ... 14 AWG
2 conductors per clamp	Flexible with twin ferrule	0.22 ... 0.5 mm²	26 ... 20 AWG
Rated current / Rated cross section		24 A / 2.5 mm²	22 A / 12 AWG
Rated short-time withstand current (1s)		300 A	
Rated voltage		1000 V	600 V
Impulse withstand voltage		8000 V	
Protection		IP20	NEMA 1

Mounting instructions

Rail		TH 35-7.5, TH 35-15
Wire stripping length		11 mm 0.433 in
Tool (for flexible conductor without ferrule)		Flat screwdriver Ø 3.5 mm Ø 0.138 in

The connecting capacity data for one Rigid: Solid/Stranded, or one Flexible conductor (when applicable) is a mandatory information required by IEC, UL and CSA standards (Copper conductors). All other data are provided as supplementary information only. For more details, please consult our CB, UL or CSA certificates and technical datasheet available on http://www.TE.com

CE | CB | RoHS | USR CNR | CSA | EAC | BV

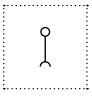

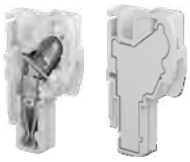

CDK2.5 CDK2.5-E

Female plugs

Description		Color	Type	Part number		Pkg qty	Weight (1 pce) g
Female plugs	1 pole	Grey	CDK2.5	1SNK805712R0000		50	2.80
Female plugs without outer nubs - Closed			CDK2.5-E	1SNK805713R0000		50	2.80

15 poles max.

Accessories

	Description			Color	Type	Part number		Pkg qty	Weight (1 pce) g
1	**End stops**	5.2 mm	0.205 in	Dark grey	BAZ1	1SNK900002R0000		50	5.30
2	**End sections**	2.2 mm	0.087 in	Dark grey	EDK2.5-22	1SNK805910R0000		20	3.15
3	**Jumper bars**	2 poles	32 A (IEC)	Orange	JB5-2	1SNK905302R0000		50	1.30
		3 poles	32 A (IEC)		JB5-3	1SNK905303R0000		50	2.00
		4 poles	32 A (IEC)		JB5-4	1SNK905304R0000		50	2.70
		5 poles	32 A (IEC)		JB5-5	1SNK905305R0000		50	3.50
		10 poles	32 A (IEC)		JB5-10	1SNK905310R0000		30	7.10
		50 poles	32 A (IEC)		JB5-50	1SNK905350R0000		10	36.00
4	**Cross spacing jumpers**	3 poles	32 A (IEC)	Orange	JB85-3	1SNK900603R0000		10	2.80
5	**Circuit separators**	3 mm	0.118 in	Dark grey	CS-R3	1SNK900107R0000		20	6.40
6	**Test adapters**	For test plugs DIA 2 mm 0.079 in		Dark grey	TP2	1SNK900203R0000		20	1.70
		For test plugs DIA 4 mm 0.157 in			TP4	1SNK900205R0000		20	2.40
7	**Test connectors**	5.2 mm 0.205 in spacing		Dark grey	TC5	1SNK900200R0000		10	5.20
		End module, 5.2 mm 0.205 in			TC5-R1	1SNK900201R0000		10	5.20
8	**Coding pegs**			Dark grey	COP-ZD	1SNK900636R0000		10	3.57
9	**Terminal block markers**	Blank marker		White	MG-CPM 13 41790	1SNB041790R0512		1960	0.23
		Blank card			MC512	1SNK140000R0000		22	9.00
					MC512PA	1SNK149999R0000		20	10.00
		Universal wire markers holder		Grey	UMH	1SNK900611R0000		10	0.20

Complete list of accessories is indicated in the terminal block datasheet including end stops.
Some accessories such as jumper bars may modify the terminal block's ratings: Complete information available in the accessories section of the catalog.

Technical data valid for copper conductors only.

1SNK164001S0201

ZDK4-22 PI-Spring pluggable terminal blocks

Feed-through - 6 mm 0.236 in spacing

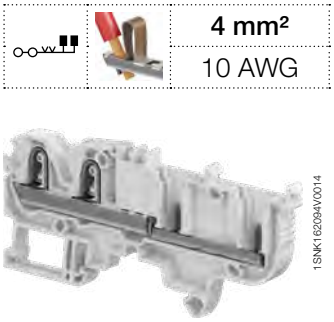

4 mm²
10 AWG

1SNK162094V0014

ZDK4-22

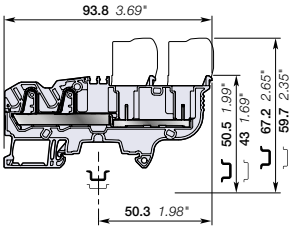

6 mm 0.236 in spacing

Description

- Increase your productivity with pluggable terminal blocks: possibility of pre-produced plugs harnesses, time saving plug and play assembly, reduced transportation panels preparation and final installation, easily connect sub-assemblies together,
- Simplify and secure your installation: in site faulty connection errors are eliminated, prior connection testing is eased and reliable, test connectors (TC5-R1 + ES-TC6) withstanding 10 000 operations are compatible for convenient testing.

Ordering details

Description		Color	Type	Part Number		Pkg qty	Weight (1 pce) g
Feed-through	4 connections	Grey	ZDK4-22	1SNK806010R0000		50	14.30

Main technical data

Connecting capacity		IEC	UL - CSA
1 conductor per clamp	Rigid: Solid/Stranded	0.5 ... 6 mm²	26 ... 10 AWG
	Flexible without ferrule	0.5 ... 4 mm²	
	Flexible with non insulated ferrule	0.5 ... 4 mm²	26 ... 12 AWG
	Flexible with insulated ferrule	0.5 ... 4 mm²	26 ... 12 AWG
2 conductors per clamp	Flexible with twin ferrule	0.5 ... 1 mm²	26 ... 18 AWG
Rated current / Rated cross section		30 A / 4 mm²	30 A / 10 AWG
Rated short-time withstand current (1s)		480 A	
Rated voltage		1000 V	600 V
Impulse withstand voltage		8000 V	
Protection		IP20	NEMA 1

Mounting instructions

Rail		TH 35-7.5, TH 35-15
Wire stripping length		12.5 mm 0.492 in
Tool (for flexible conductor without ferrule)		Flat screwdriver Ø 3.5 mm Ø 0.138 in

The connecting capacity data for one Rigid: Solid/Stranded, or one Flexible conductor (when applicable) is a mandatory information required by IEC, UL and CSA standards (Copper conductors). All other data are provided as supplementary information only. For more details, please consult our CB, UL or CSA certificates and technical datasheet available on http://www.TE.com

CE | CB | RoHS | USR CNR | CSA | EAC | BV

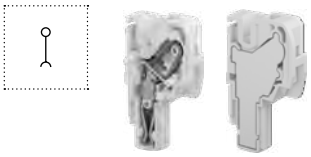

CDK4 CDK4-E

Female plugs

Description		Color	Type	Part Number		Pkg qty	Weight (1 pce) g
Female plugs	1 pole	Grey	CDK4	1SNK806712R0000		50	3.80
Female plugs without outer nubs - Closed			CDK4-E	1SNK806713R0000		50	4.50

15 poles max.

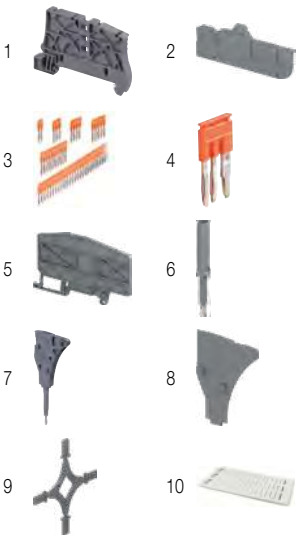

Accessories

	Description			Color	Type	Part Number		Pkg qty	Weight (1 pce) g
1	**End stops**	5.2 mm	0.205 in	Dark grey	BAZ1	1SNK900002R0000		50	5.30
2	**End sections**	2.2 mm	0.087 in	Dark grey	EDK2.5-22	1SNK805910R0000		20	3.15
3	**Jumper bars**	2 poles	41 A (IEC)	Orange	JB6-2	1SNK906302R0000		50	1.30
		3 poles	41 A (IEC)		JB6-3	1SNK906303R0000		50	2.10
		4 poles	41 A (IEC)		JB6-4	1SNK906304R0000		50	2.90
		5 poles	41 A (IEC)		JB6-5	1SNK906305R0000		50	3.60
		10 poles	41 A (IEC)		JB6-10	1SNK906310R0000		20	7.40
		50 poles	41 A (IEC)		JB6-50	1SNK906350R0000		10	38.10
4	**Cross spacing jumpers**	3 poles	32 A (IEC)	Orange	JB85-3	1SNK900603R0000		10	2.80
5	**Circuit separators**	3 mm	0.118 in	Dark grey	CS-R3	1SNK900107R0000		20	6.40
6	**Test adapters**	For test plugs DIA 2 mm 0.079 in		Dark grey	TP2	1SNK900203R0000		20	1.70
		For test plugs DIA 4 mm 0.157 in			TP4	1SNK900205R0000		20	2.40
7	**Test connectors**	End module, 5.2 mm 0.205 in		Dark grey	TC5-R1	1SNK900201R0000		10	5.20
8	**Spacers**	0.8 mm	0.031 in	Dark grey	ES-TC6	1SNK900105R0000		10	0.80
9	**Coding pegs**			Dark grey	COP-ZD	1SNK900636R0000		10	3.57
10	**Terminal block markers**	Blank marker		White	MG-CPM 13 41791	1SNB041791R0612		1680	0.27
		Blank card			MC612	1SNK150000R0000		22	10.00
					MC612PA	1SNK159999R0000		20	11.00
		Universal wire markers holder		Grey	UMH	1SNK900611R0000		10	0.20

Complete list of accessories is indicated in the terminal block datasheet including end stops.
Some accessories such as jumper bars may modify the terminal block's ratings: Complete information available in the accessories section of the catalog.

1SNK164002S0201

Technical data valid for copper conductors only.

ZDK2.5-11-PE PI-Spring pluggable terminal blocks
Ground - 5.2 mm 0.205 in spacing

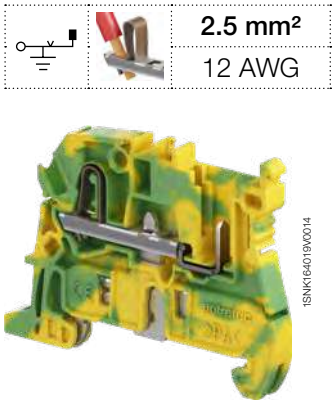

2.5 mm²	
12 AWG	

1SNK164019V0014

ZDK2.5-11-PE

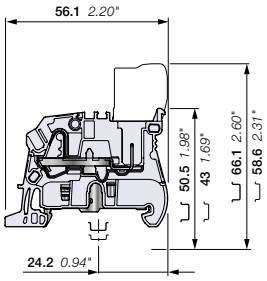

5.2 mm 0.205 in spacing

CDK2.5-PE CDK2.5-PE-E

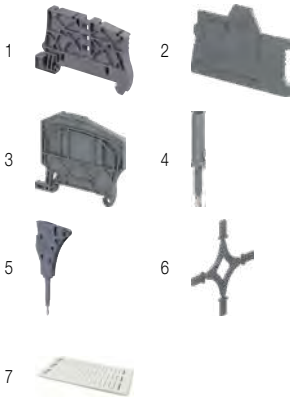

Description

- Increase your productivity with pluggable terminal blocks: possibility of pre-produced plugs harnesses, time saving plug and play assembly, reduced transportation panels preparation and final installation, easily connect sub-assemblies together,
- Simplify and secure your installation: in site faulty connection errors are eliminated, prior connection testing is eased and reliable, test connectors (TC5) withstanding 10 000 operations are compatible for convenient testing.

Ordering details

Description		Color	Type	Part Number		Pkg qty	Weight (1 pce) g
Ground	2 connections	Green-yellow	ZDK2.5-11-PE	1SNK805150R0000		50	9.62

Main technical data

Connecting capacity		IEC	UL - CSA
1 conductor per clamp	Rigid: Solid/Stranded	0.2 ... 4 mm²	26 ... 12 AWG
	Flexible without ferrule	0.22 ... 2.5 mm²	
	Flexible with non insulated ferrule	0.22 ... 2.5 mm²	26 ... 14 AWG
	Flexible with insulated ferrule	0.22 ... 2.5 mm²	26 ... 14 AWG
Rated cross section		2.5 mm²	12 AWG
Rated short-time withstand current (1s)		300 A	396 A
Protection		IP20	NEMA 1

Mounting instructions

Rail		TH 35-7.5, TH 35-15
Wire stripping length		11 mm 0.433 in
Tool (for flexible conductor without ferrule)		Flat screwdriver Ø 3.5 mm Ø 0.138 in

The connecting capacity data for one Rigid: Solid/Stranded, or one Flexible conductor (when applicable) is a mandatory information required by IEC, UL and CSA standards (Copper conductors). All other data are provided as supplementary information only. For more details, please consult our CB, UL or CSA certificates and technical datasheet available on http://www.TE.com

CE CB RoHS USR CNR CSA EAC BV

Female plugs

Description		Color	Type	Part Number		Pkg qty	Weight (1 pce) g
Female plugs	1 pole	Green-yellow	CDK2.5-PE	1SNK805750R0000		50	2.80
Female plugs without outer nubs - Closed	1 pole		CDK2.5-PE-E	1SNK805753R0000		50	2.88

15 poles max.

Accessories

	Description			Color	Type	Part Number		Pkg qty	Weight (1 pce) g
1	**End stops**	5.2 mm	0.205 in	Dark grey	BAZ1	1SNK900002R0000		50	5.30
2	**End sections**	1.5 mm	0.059 in	Dark grey	EDK2.5-11	1SNK805915R0000		20	1.49
3	**Circuit separators**	3 mm	0.118 in	Dark grey	CS-R2	1SNK900106R0000		20	3.80
4	**Test adapters**	For test plugs DIA 2 mm 0.079 in		Dark grey	TP2	1SNK900203R0000		20	1.70
		For test plugs DIA 4 mm 0.157 in			TP4	1SNK900205R0000		20	2.40
5	**Test connectors**	5.2 mm 0.205 in spacing		Dark grey	TC5	1SNK900200R0000		10	5.20
		End module, 5.2 mm 0.205 in			TC5-R1	1SNK900201R0000		10	5.20
6	**Coding pegs**			Dark grey	COP-ZD	1SNK900636R0000		10	3.57
7	**Terminal block markers**	Blank card		White	MC512	1SNK140000R0000		22	9.00
					MC512PA	1SNK149999R0000		20	10.00
		Blank marker			MG-CPM 13 41790	1SNB041790R0512		1960	0.236
		Universal wire markers holder		Grey	UMH	1SNK900611R0000		10	0.20

Complete list of accessories is indicated in the terminal block datasheet including end stops.
Some accessories such as jumper bars may modify the terminal block's ratings: Complete information available in the accessories section of the catalog.

Technical data valid for copper conductors only.

1SNK164024S0201

ZDK2.5-22-PE PI-Spring pluggable terminal blocks

Feed-through - 5.2 mm 0.205 in spacing

2.5 mm²

12 AWG

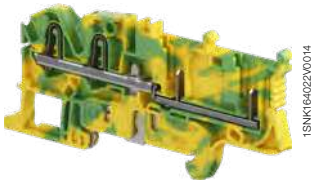

1SNK164022V0014

ZDK2.5-22-PE

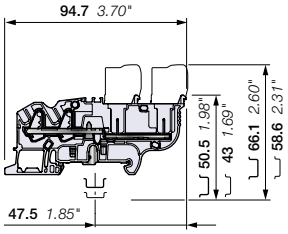

5.2 mm 0.205 in spacing

Description

- Increase your productivity with pluggable terminal blocks: possibility of pre-produced plugs harnesses, time saving plug and play assembly, reduced transportation panels preparation and final installation, easily connect sub-assemblies together,
- Simplify and secure your installation: in site faulty connection errors are eliminated, prior connection testing is eased and reliable, test connectors (TC5) withstanding 10 000 operations are compatible for convenient testing.

Ordering details

Description		Color	Type	Part Number		Pkg qty	Weight (1 pce) g
Ground	4 connections	Green-yellow	ZDK2.5-22-PE	1SNK805152R0000		50	14.05

Main technical data

Connecting capacity		IEC	UL - CSA
1 conductor per clamp	Rigid: Solid/Stranded	0.2 ... 4 mm²	26 ... 12 AWG
	Flexible without ferrule	0.22 ... 2.5 mm²	
	Flexible with non insulated ferrule	0.22 ... 2.5 mm²	26 ... 14 AWG
	Flexible with insulated ferrule	0.22 ... 2.5 mm²	26 ... 14 AWG
Rated cross section		2.5 mm²	12 AWG
Rated short-time withstand current (1s)		300 A	396 A
Protection		IP20	NEMA 1

Mounting instructions

Rail		TH 35-7.5, TH 35-15
Wire stripping length		11 mm 0.433 in
Tool (for flexible conductor without ferrule)		Flat screwdriver Ø 3.5 mm Ø 0.138 in

The connecting capacity data for one Rigid: Solid/Stranded, or one Flexible conductor (when applicable) is a mandatory information required by IEC, UL and CSA standards (Copper conductors). All other data are provided as supplementary information only. For more details, please consult our CB, UL or CSA certificates and technical datasheet available on http://www.TE.com

CE CB RoHS USR CNR CSA EAC BV

CDK2.5-PE CDK2.5-PE-E

Female plugs

Description		Color	Type	Part Number		Pkg qty	Weight (1 pce) g
Female plugs	1 pole	Green-yellow	CDK2.5-PE	1SNK805750R0000		50	2.80
Female plugs without outer nubs - Closed	1 pole		CDK2.5-PE-E	1SNK805753R0000		50	2.88

15 poles max.

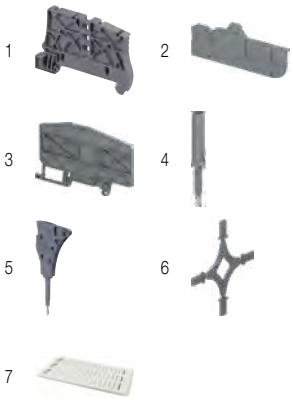

Accessories

	Description			Color	Type	Part Number		Pkg qty	Weight (1 pce) g
1	**End stops**	5.2 mm	0.205 in	Dark grey	BAZ1	1SNK900002R0000		50	5.30
2	**End sections**	2.2 mm	0.087 in	Dark grey	EDK2.5-22	1SNK805910R0000		20	3.15
3	**Circuit separators**	3 mm	0.118 in	Dark grey	CS-R3	1SNK900107R0000		20	6.40
4	**Test adapters**	For test plugs DIA 2 mm 0.079 in		Dark grey	TP2	1SNK900203R0000		20	1.70
		For test plugs DIA 4 mm 0.157 in			TP4	1SNK900205R0000		20	2.40
5	**Test connectors**	5.2 mm 0.205 in spacing		Dark grey	TC5	1SNK900200R0000		10	5.20
		End module, 5.2 mm 0.205 in			TC5-R1	1SNK900201R0000		10	5.20
6	**Coding pegs**			Dark grey	COP-ZD	1SNK900636R0000		10	3.57
7	**Terminal block markers**	Blank card		White	MC512	1SNK140000R0000		22	9.00
					MC512PA	1SNK149999R0000		20	10.00
		Blank marker			MG-CPM 13 41790	1SNB041790R0512		1960	0.236
		Universal wire markers holder		Grey	UMH	1SNK900611R0000		10	0.20

Complete list of accessories is indicated in the terminal block datasheet including end stops.
Some accessories such as jumper bars may modify the terminal block's ratings: Complete information available in the accessories section of the catalog.

Technical data valid for copper conductors only.

1SNK164026S0201

ZDK2.5-D2 PI-Spring pluggable terminal blocks

Double deck feed-through 2 circuits - 5.2 mm 0.205 in spacing

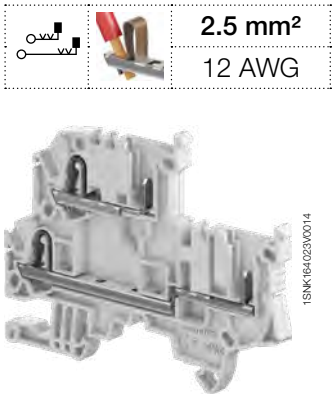

2.5 mm²
12 AWG

1SNK164023V0014

ZDK2.5-D2

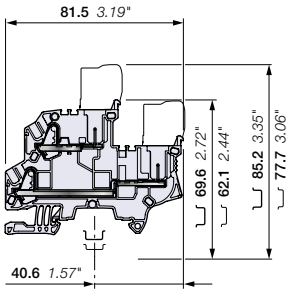

5.2 mm 0.205 in spacing

CDK2.5 CDK2.5-E CDK2.5-BL CDK2.5-BL-E

Description

- Increase your productivity with pluggable terminal blocks: possibility of pre-produced plugs harnesses, time saving plug and play assembly, reduced transportation panels preparation and final installation, easily connect sub-assemblies together,
- Simplify and secure your installation: in site faulty connection errors are eliminated, prior connection testing is eased and reliable, test connectors (TC5) withstanding 10 000 operations are compatible for convenient testing.

Ordering details

Description		Color	Type	Part Number		Pkg qty	Weight (1 pce) g
Feed-through	double deck 4 connections	Grey	ZDK2.5-D2	1SNK805213R0000		50	11.89
		Blue	ZDK2.5-D2-BL	1SNK805223R0000		50	11.89

Main technical data

Connecting capacity		IEC	UL - CSA
1 conductor per clamp	Rigid: Solid/Stranded	0.2 ... 4 mm²	26 ... 12 AWG
	Flexible without ferrule	0.22 ... 2.5 mm²	
	Flexible with non insulated ferrule	0.22 ... 2.5 mm²	26 ... 14 AWG
	Flexible with insulated ferrule	0.22 ... 2.5 mm²	26 ... 14 AWG
2 conductors per clamp	Flexible with twin ferrule	0.22 ... 0.5 mm²	26 ... 20 AWG
Rated current / Rated cross section		22 A / 2.5 mm²	20 A / 12 AWG
Rated short-time withstand current (1s)		300 A	
Rated voltage		800 V	600 V
Impulse withstand voltage		8000 V	
Protection		IP20	NEMA 1

Mounting instructions

Rail	TH 35-7.5, TH 35-15
Wire stripping length	11 mm 0.433 in
Tool (for flexible conductor without ferrule)	Flat screwdriver Ø 3.5 mm Ø 0.138 in

The connecting capacity data for one Rigid: Solid/Stranded, or one Flexible conductor (when applicable) is a mandatory information required by IEC, UL and CSA standards (Copper conductors). All other data are provided as supplementary information only. For more details, please consult our CB, UL or CSA certificates and technical datasheet available on http://www.TE.com

CE CB RoHS USR CNR CSA EAC BV

Female plugs

Description		Color	Type	Part Number		Pkg qty	Weight (1 pce) g
Female plugs	1 pole	Grey	CDK2.5	1SNK805712R0000		50	2.80
Female plugs without outer nubs - Closed	1 pole		CDK2.5-E	1SNK805713R0000		50	2.88
Female plugs	1 pole	Blue	CDK2.5-BL	1SNK805742R0000		50	2.80
Female plugs without outer nubs - Closed	1 pole		CDK2.5-BL-E	1SNK805743R0000		50	2.88

15 poles max.

Accessories

	Description			Color	Type	Part Number		Pkg qty	Weight (1 pce) g
1	**End stops**	5.2 mm	0.205 in	Dark grey	BAZ1	1SNK900002R0000		50	5.30
2	**End sections**	2.0 mm	0.079 in	Dark grey	EDK2.5-D	1SNK805913R0000		20	3.88
3	**Jumper bars**	2 poles	32 A (IEC)	Orange	JB5-2	1SNK905302R0000		50	1.30
		3 poles	32 A (IEC)		JB5-3	1SNK905303R0000		50	2.00
		4 poles	32 A (IEC)		JB5-4	1SNK905304R0000		50	2.70
		5 poles	32 A (IEC)		JB5-5	1SNK905305R0000		50	3.50
		10 poles	32 A (IEC)		JB5-10	1SNK905310R0000		30	7.10
		50 poles	32 A (IEC)		JB5-50	1SNK905350R0000		10	36.00
4	**Cross spacing jumpers**	3 poles	32 A (IEC)	Orange	JB85-3	1SNK900603R0000		10	2.80
5	**Test adapters**	For test plugs DIA 2 mm 0.079 in		Dark grey	TP2	1SNK900203R0000		20	1.70
		For test plugs DIA 4 mm 0.157 in			TP4	1SNK900205R0000		20	2.40
6	**Test connectors**	5.2 mm 0.205 in spacing		Dark grey	TC5	1SNK900200R0000		10	5.20
		End module, 5.2 mm 0.205 in			TC5-R1	1SNK900201R0000		10	5.20
7	**Coding pegs**			Dark grey	COP-ZD	1SNK900636R0000		10	3.57
8	**Terminal block markers**	Blank card		White	MC512	1SNK140000R0000		22	9.00
					MC512PA	1SNK149999R0000		20	10.00
		Blank marker			MG-CPM 13 41790	1SNB041790R0512		1960	0.236
		Universal wire markers holder		Grey	UMH	1SNK900611R0000		10	0.20

Complete list of accessories is indicated in the terminal block datasheet including end stops.
Some accessories such as jumper bars may modify the terminal block's ratings: Complete information available in the accessories section of the catalog.

Technical data valid for copper conductors only.

1SNK164029S0201

ZDK2.5-D1 PI-Spring pluggable terminal blocks

Double deck feed-through 1 circuit - 5.2 mm 0.205 in spacing

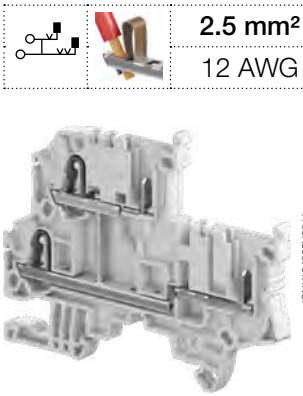

2.5 mm²
12 AWG

1SNK164025V0014

ZDK2.5-D1

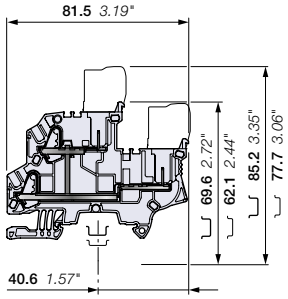

5.2 mm 0.205 in spacing

Description

- Increase your productivity with pluggable terminal blocks: possibility of pre-produced plugs harnesses, time saving plug and play assembly, reduced transportation panels preparation and final installation, easily connect sub-assemblies together,
- Simplify and secure your installation: in site faulty connection errors are eliminated, prior connection testing is eased and reliable, test connectors (TC5) withstanding 10 000 operations are compatible for convenient testing.

Ordering details

Description		Color	Type	Part Number		Pkg qty	Weight (1 pce) g
Feed-through	double deck 4 connections	Grey	ZDK2.5-D1	1SNK805214R0000		50	12.46

Main technical data

Connecting capacity		IEC	UL - CSA
1 conductor per clamp	Rigid: Solid/Stranded	0.2 ... 4 mm²	26 ... 12 AWG
	Flexible without ferrule	0.22 ... 2.5 mm²	
	Flexible with non insulated ferrule	0.22 ... 2.5 mm²	26 ... 14 AWG
	Flexible with insulated ferrule	0.22 ... 2.5 mm²	26 ... 14 AWG
2 conductors per clamp	Flexible with twin ferrule	0.22 ... 0.5 mm²	26 ... 20 AWG
Rated current / Rated cross section		22 A / 2.5 mm²	20 A / 12 AWG
Rated short-time withstand current (1s)		300 A	
Rated voltage		800 V	600 V
Impulse withstand voltage		8000 V	
Protection		IP20	NEMA 1

Mounting instructions

Rail		TH 35-7.5, TH 35-15
Wire stripping length		11 mm 0.433 in
Tool (for flexible conductor without ferrule)		Flat screwdriver Ø 3.5 mm Ø 0.138 in

The connecting capacity data for one Rigid: Solid/Stranded, or one Flexible conductor (when applicable) is a mandatory information required by IEC, UL and CSA standards (Copper conductors). All other data are provided as supplementary information only. For more details, please consult our CB, UL or CSA certificates and technical datasheet available on http://www.TE.com

CE CB RoHS USR CNR CSA EAC BV

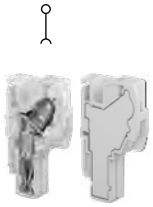

CDK2.5 CDK2.5-E

Female plugs

Description		Color	Type	Part Number		Pkg qty	Weight (1 pce) g
Female plugs	1 pole	Grey	CDK2.5	1SNK805712R0000		50	2.80
Female plugs without outer nubs - Closed	1 pole		CDK2.5-E	1SNK805713R0000		50	2.88

15 poles max.

Accessories

	Description			Color	Type	Part Number		Pkg qty	Weight (1 pce) g
1	**End stops**	5.2 mm	0.205 in	Dark grey	BAZ1	1SNK900002R0000		50	5.30
2	**End sections**	2.0 mm	0.079 in	Dark grey	EDK2.5-D	1SNK805913R0000		20	3.88
3	**Jumper bars**	2 poles	32 A (IEC)	Orange	JB5-2	1SNK905302R0000		50	1.30
		3 poles	32 A (IEC)		JB5-3	1SNK905303R0000		50	2.00
		4 poles	32 A (IEC)		JB5-4	1SNK905304R0000		50	2.70
		5 poles	32 A (IEC)		JB5-5	1SNK905305R0000		50	3.50
		10 poles	32 A (IEC)		JB5-10	1SNK905310R0000		30	7.10
		50 poles	32 A (IEC)		JB5-50	1SNK905350R0000		10	36.00
4	**Cross spacing jumpers**	3 poles	32 A (IEC)	Orange	JB85-3	1SNK900603R0000		10	2.80
5	**Test adapters**	For test plugs DIA 2 mm 0.079 in		Dark grey	TP2	1SNK900203R0000		20	1.70
		For test plugs DIA 4 mm 0.157 in			TP4	1SNK900205R0000		20	2.40
6	**Test connectors**	5.2 mm 0.205 in spacing		Dark grey	TC5	1SNK900200R0000		10	5.20
		End module, 5.2 mm 0.205 in			TC5-R1	1SNK900201R0000		10	5.20
7	**Coding pegs**			Dark grey	COP-ZD	1SNK900636R0000		10	3.57
8	**Terminal block markers**	Blank card		White	MC512	1SNK140000R0000		22	9.00
					MC512PA	1SNK149999R0000		20	10.00
		Blank marker			MG-CPM 13 41790	1SNB041790R0512		1960	0.236
		Universal wire markers holder		Grey	UMH	1SNK900611R0000		10	0.20

Complete list of accessories is indicated in the terminal block datasheet including end stops.
Some accessories such as jumper bars may modify the terminal block's ratings: Complete information available in the accessories section of the catalog.

Technical data valid for copper conductors only.

1SNK164027S0201

ZDK2.5-D2-PE PI-Spring pluggable terminal blocks

Double deck feed-through + ground - 5.2 mm 0.205 in spacing

2.5 mm²

12 AWG

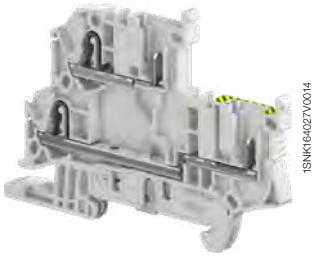

1SNK164027V0014

ZDK2.5-D2-PE

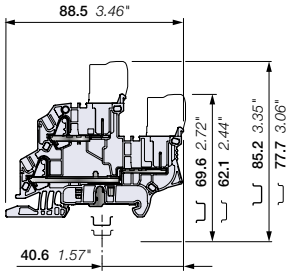

5.2 mm 0.205 in spacing

Description

- Increase your productivity with pluggable terminal blocks: possibility of pre-produced plugs harnesses, time saving plug and play assembly, reduced transportation panels preparation and final installation, easily connect sub-assemblies together,
- Simplify and secure your installation: in site faulty connection errors are eliminated, prior connection testing is eased and reliable, test connectors (TC5) withstanding 10 000 operations are compatible for convenient testing.

Ordering details

Description		Color	Type	Part Number		Pkg qty	Weight (1 pce) g
Feed-through + ground	double deck 4 connections	Grey, Green-yellow	ZDK2.5-D2-PE	1SNK805212R0000		50	16.13

Main technical data

Connecting capacity		IEC	UL - CSA
1 conductor per clamp	Rigid: Solid/Stranded	0.2 ... 4 mm²	26 ... 12 AWG
	Flexible without ferrule	0.22 ... 2.5 mm²	
	Flexible with non insulated ferrule	0.22 ... 2.5 mm²	26 ... 14 AWG
	Flexible with insulated ferrule	0.22 ... 2.5 mm²	26 ... 14 AWG
2 conductors per clamp	Flexible with twin ferrule	0.22 ... 0.5 mm²	26 ... 20 AWG
Rated current / Rated cross section		22 A / 2.5 mm²	20 A / 12 AWG
Rated short-time withstand current (1s)		300 A	396 A
Rated voltage		800 V	600 V
Impulse withstand voltage		8000 V	
Protection		IP20	NEMA 1

Mounting instructions

Rail		TH 35-7.5, TH 35-15
Wire stripping length		11 mm 0.433 in
Tool (for flexible conductor without ferrule)		Flat screwdriver Ø 3.5 mm Ø 0.138 in

The connecting capacity data for one Rigid: Solid/Stranded, or one Flexible conductor (when applicable) is a mandatory information required by IEC, UL and CSA standards (Copper conductors). All other data are provided as supplementary information only. For more details, please consult our CB, UL or CSA certificates and technical datasheet available on http://www.TE.com

CE CB RoHS USR CNR CSA EAC BV

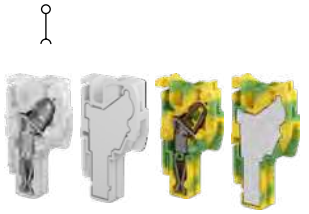

CDK2.5 CDK2.5-E CDK2.5-PE CDK2.5-PE-E

Female plugs

Description		Color	Type	Part Number		Pkg qty	Weight (1 pce) g
Female plugs	1 pole	Grey	CDK2.5	1SNK805712R0000		50	2.80
Female plugs without outer nubs - Closed	1 pole		CDK2.5-E	1SNK805713R0000		50	2.88
Female plugs	1 pole	Green-yellow	CDK2.5-PE	1SNK805750R0000		50	2.80
Female plugs without outer nubs - Closed	1 pole		CDK2.5-PE-E	1SNK805753R0000		50	2.88

15 poles max.

Accessories

	Description			Color	Type	Part Number		Pkg qty	Weight (1 pce) g
1	**End stops**	5.2 mm	0.205 in	Dark grey	BAZ1	1SNK900002R0000		50	5.30
2	**End sections**	2.0 mm	0.079 in	Dark grey	EDK2.5-D	1SNK805913R0000		20	3.88
3	**Jumper bars**	2 poles	32 A (IEC)	Orange	JB5-2	1SNK905302R0000		50	1.30
		3 poles	32 A (IEC)		JB5-3	1SNK905303R0000		50	2.00
		4 poles	32 A (IEC)		JB5-4	1SNK905304R0000		50	2.70
		5 poles	32 A (IEC)		JB5-5	1SNK905305R0000		50	3.50
		10 poles	32 A (IEC)		JB5-10	1SNK905310R0000		30	7.10
		50 poles	32 A (IEC)		JB5-50	1SNK905350R0000		10	36.00
4	**Cross spacing jumpers**	3 poles	32 A (IEC)	Orange	JB85-3	1SNK900603R0000		10	2.80
5	**Test adapters**	For test plugs DIA 2 mm 0.079 in		Dark grey	TP2	1SNK900203R0000		20	1.70
		For test plugs DIA 4 mm 0.157 in			TP4	1SNK900205R0000		20	2.40
6	**Test connectors**	5.2 mm 0.205 in spacing		Dark grey	TC5	1SNK900200R0000		10	5.20
		End module, 5.2 mm 0.205 in			TC5-R1	1SNK900201R0000		10	5.20
7	**Coding pegs**			Dark grey	COP-ZD	1SNK900636R0000		10	3.57
8	**Terminal block markers**	Blank card		White	MC512	1SNK140000R0000		22	9.00
					MC512PA	1SNK149999R0000		20	10.00
		Blank marker			MG-CPM 13 41790	1SNB041790R0512		1960	0.236
		Universal wire markers holder		Grey	UMH	1SNK900611R0000		10	0.20

Complete list of accessories is indicated in the terminal block datasheet including end stops.
Some accessories such as jumper bars may modify the terminal block's ratings: Complete information available in the accessories section of the catalog.

Technical data valid for copper conductors only.

1SNK164030S0201

4

ZDK2.5-D1-PE PI-Spring pluggable terminal blocks

Double deck ground - 5.2 mm 0.205 in spacing

2.5 mm²

12 AWG

1SNK164026V0014

ZDK2.5-D1-PE

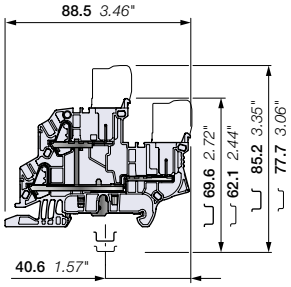

5.2 mm 0.205 in spacing

CDK2.5-PE CDK2.5-PE-E

Description

- Increase your productivity with pluggable terminal blocks: possibility of pre-produced plugs harnesses, time saving plug and play assembly, reduced transportation panels preparation and final installation, easily connect sub-assemblies together,
- Simplify and secure your installation: in site faulty connection errors are eliminated, prior connection testing is eased and reliable, test connectors (TC5) withstanding 10 000 operations are compatible for convenient testing.

Ordering details

Description		Color	Type	Part Number		Pkg qty	Weight (1 pce) g
Ground	double deck 4 connections	Green-yellow	ZDK2.5-D1-PE	1SNK805250R0000		50	16.80

Main technical data

Connecting capacity		IEC	UL - CSA
1 conductor per clamp	Rigid: Solid/Stranded	0.2 ... 4 mm²	26 ... 12 AWG
	Flexible without ferrule	0.22 ... 2.5 mm²	
	Flexible with non insulated ferrule	0.22 ... 2.5 mm²	26 ... 14 AWG
	Flexible with insulated ferrule	0.22 ... 2.5 mm²	26 ... 14 AWG
Rated cross section		2.5 mm²	12 AWG
Rated short-time withstand current (1s)		300 A	396 A
Protection		IP20	NEMA 1

Mounting instructions

Rail		TH 35-7.5, TH 35-15
Wire stripping length		11 mm 0.433 in
Tool (for flexible conductor without ferrule)		Flat screwdriver Ø 3.5 mm Ø 0.138 in

The connecting capacity data for one Rigid: Solid/Stranded, or one Flexible conductor (when applicable) is a mandatory information required by IEC, UL and CSA standards (Copper conductors). All other data are provided as supplementary information only. For more details, please consult our CB, UL or CSA certificates and technical datasheet available on http://www.TE.com

CE CB RoHS USR CNR CSA EAC BV

Female plugs

Description		Color	Type	Part Number		Pkg qty	Weight (1 pce) g
Female plugs	1 pole	Green-yellow	CDK2.5-PE	1SNK805750R0000		50	2.80
Female plugs without outer nubs - Closed	1 pole		CDK2.5-PE-E	1SNK805753R0000		50	2.88

15 poles max.

Accessories

	Description			Color	Type	Part Number		Pkg qty	Weight (1 pce) g
1	**End stops**	5.2 mm	0.205 in	Dark grey	BAZ1	1SNK900002R0000		50	5.30
2	**End sections**	2.0 mm	0.079 in	Dark grey	EDK2.5-D	1SNK805913R0000		20	3.88
3	**Test adapters**	For test plugs DIA 2 mm 0.079 in		Dark grey	TP2	1SNK900203R0000		20	1.70
		For test plugs DIA 4 mm 0.157 in			TP4	1SNK900205R0000		20	2.40
4	**Test connectors**	5.2 mm 0.205 in spacing		Dark grey	TC5	1SNK900200R0000		10	5.20
		End module, 5.2 mm 0.205 in			TC5-R1	1SNK900201R0000		10	5.20
5	**Coding pegs**			Dark grey	COP-ZD	1SNK900636R0000		10	3.57
6	**Terminal block markers**	Blank card		White	MC512	1SNK140000R0000		22	9.00
					MC512PA	1SNK149999R0000		20	10.00
		Universal wire markers holder		Grey	UMH	1SNK900611R0000		10	0.20

Complete list of accessories is indicated in the terminal block datasheet including end stops.
Some accessories such as jumper bars may modify the terminal block's ratings: Complete information available in the accessories section of the catalog.

Technical data valid for copper conductors only.

1SNK164028S0201

CDK2.5 PI-Spring female plugs

Female plug - 5.2 mm 0.205 in spacing

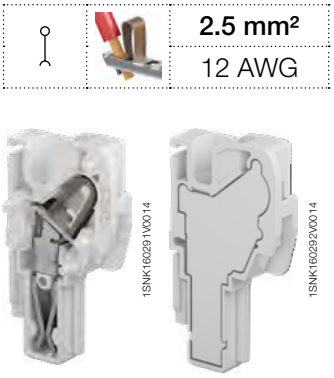

CDK2.5 CDK2.5-E

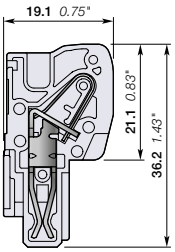

5.2 mm 0.205 in spacing

2.5 mm²	
12 AWG	

Description

- Create your own female plug assemblies without any special tools, easily snap together multiple plugs for optimal ergonomics and quick assembly,
- Increase your flexibility: eliminate stock of pre-configured female plugs, easily add an extra plug in case of needed modification,
- Reduce your stock of unitary plugs up to 30%: only two plug variants are required to compose your own subsets of plugs from 2 to 15 poles.

Ordering details

Description	Color	Type	Part number		Pkg qty	Weight (1 pce) g
Female plugs	Grey	CDK2.5	1SNK805712R0000		50	2.80
	Blue	CDK2.5-BL	1SNK805742R0000		50	2.80
	Green-Yellow	CDK2.5-PE	1SNK805750R0000		50	2.80
Female plugs without outer nubs - Closed	Grey	CDK2.5-E	1SNK805713R0000		50	2.80
	Blue	CDK2.5-BL-E	1SNK805743R0000		50	2.80
	Green-Yellow	CDK2.5-PE-E	1SNK805753R0000		50	2.80

Main technical data

Connecting capacity		IEC	UL - CSA
1 conductor per clamp	Rigid: Solid/Stranded	0.2 ... 4 mm²	26 ... 12 AWG
	Flexible without ferrule	0.22 ... 2.5 mm²	
	Flexible with non insulated ferrule	0.22 ... 2.5 mm²	26 ... 14 AWG
	Flexible with insulated ferrule	0.22 ... 2.5 mm²	26 ... 14 AWG
2 conductors per clamp	Flexible with twin ferrule	0.22 ... 0.5 mm²	26 ... 20 AWG
Rated current / Rated cross section		24 A / 2.5 mm²	22 A / 12 AWG
Rated short-time withstand current (1s)		300 A	
Rated voltage		1000 V	600 V
Impulse withstand voltage		8000 V	
Protection		IP20	NEMA 1

Mounting instructions

Rail		
Wire stripping length		11 mm 0.433 in
Tool (for flexible conductor without ferrule)		Flat screwdriver Ø 3.5 mm Ø 0.138 in

The connecting capacity data for one Rigid: Solid/Stranded, or one Flexible conductor (when applicable) is a mandatory information required by IEC, UL and CSA standards (Copper conductors). All other data are provided as supplementary information only. For more details, please consult our CB, UL or CSA certificates and technical datasheet available on http://www.TE.com

CE CB RoHS USR CNR CSA EAC BV

Mounting instructions

15 poles max.

Accessories

	Description		Color	Type	Part number		Pkg qty	Weight (1 pce) g
1	**Locking devices**	9.4 mm 0.370 in spacing	Black	VR-ZD	1SNK900637R0000		50	0.7
2	**Cable clamp**	9.4 mm 0.370 in spacing	Dark grey	PT-ZD	1SNK900660R0000		50	1.04
3	**Terminal block markers**	Blank marker	White	MG-CPM 13 41790	1SNB041790R0512		1960	0.23
		Blank strip label		MG-CPMFA 43196	1SNB043196R0012		350	2.56
		Blank card		MC512	1SNK140000R0000		22	9.00
				MC512PA	1SNK149999R0000		20	10.00
		Universal wire markers holder	Grey	UMH	1SNK900611R0000		10	0.20

Complete list of accessories is indicated in the terminal block datasheet including end stops.
Some accessories such as jumper bars may modify the terminal block's ratings: Complete information available in the accessories section of the catalog.

1SNK164005S0201

Technical data valid for copper conductors only.

CDK2.5-J PI-Spring female plugs

Female plug - 5.2 mm 0.205 in spacing

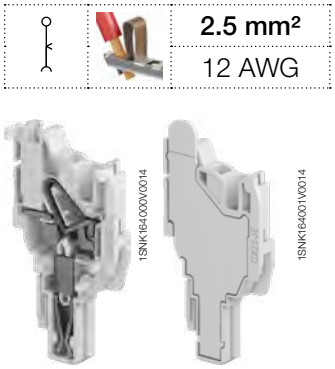

CDK2.5-J CDK2.5-J-E

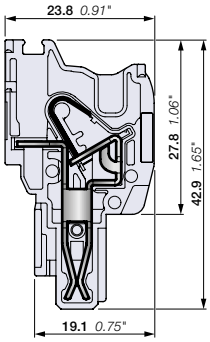

5.2 mm 0.205 in spacing

Description

- Create your own female plug assemblies without any special tools, easily snap together multiple plugs for optimal ergonomics and quick assembly,
- Increase your flexibility: eliminate stock of pre-configured female plugs, easily add an extra plug in case of needed modification,
- Reduce your stock of unitary plugs up to 30%: only two plug variants are required to compose your own subsets of plugs from 2 to 15 poles.

Description	Color	Type	Part Number	Pkg qty	Weight (1 pce) g
Female plugs	Grey	CDK2.5-J	1SNK805738R0000	50	4.08
	Blue	CDK2.5-J-BL	1SNK805744R0000	50	4.08
	Green-yellow	CDK2.5-J-PE	1SNK805748R0000	50	4.08
Female plugs without outer nubs - Closed	Grey	CDK2.5-J-E	1SNK805739R0000	50	4.34
	Blue	CDK2.5-J-BL-E	1SNK805745R0000	50	4.34
	Green-yellow	CDK2.5-J-PE-E	1SNK805749R0000	50	4.34

Main technical data

Connecting capacity		IEC	UL - CSA
1 conductor per clamp	Rigid: Solid/Stranded	0.2 ... 4 mm²	26 ... 12 AWG
	Flexible without ferrule	0.22 ... 2.5 mm²	
	Flexible with non insulated ferrule	0.22 ... 2.5 mm²	26 ... 14 AWG
	Flexible with insulated ferrule	0.22 ... 2.5 mm²	26 ... 14 AWG
2 conductors per clamp	Flexible with twin ferrule	0.22 ... 0.5 mm²	26 ... 20 AWG
Rated current / Rated cross section		24 A / 2.5 mm²	20 A / 12 AWG
Rated short-time withstand current (1s)		300 A	
Rated voltage		800 V	600 V
Impulse withstand voltage		8000 V	
Protection		IP20	NEMA 1

Mounting instructions

Rail		
Wire stripping length		11 mm 0.433 in
Tool (for flexible conductor without ferrule)		Flat screwdriver Ø 3.5 mm Ø 0.138 in

The connecting capacity data for one Rigid: Solid/Stranded, or one Flexible conductor (when applicable) is a mandatory information required by IEC, UL and CSA standards (Copper conductors). All other data are provided as supplementary information only. For more details, please consult our CB, UL or CSA certificates and technical datasheet available on http://www.TE.com

CE CB RoHS USR CNR CSA EAC BV

Mounting instructions

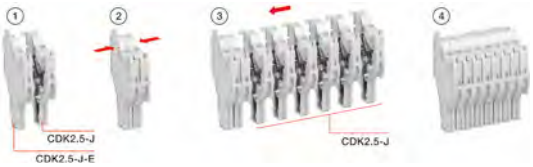

15 poles max.

Accessories

	Description			Color	Type	Part Number	Pkg qty	Weight (1 pce) g
1	**Jumper bars**	2 poles	32 A (IEC)	Orange	JB5-2	1SNK905302R0000	50	1.30
		3 poles	32 A (IEC)		JB5-3	1SNK905303R0000	50	2.00
		4 poles	32 A (IEC)		JB5-4	1SNK905304R0000	50	2.70
		5 poles	32 A (IEC)		JB5-5	1SNK905305R0000	50	3.50
		10 poles	32 A (IEC)		JB5-10	1SNK905310R0000	30	7.10
		50 poles	32 A (IEC)		JB5-50	1SNK905350R0000	10	36.00
2	**Test adapters**	For test plugs DIA 2 mm 0.079 in		Dark grey	TP2	1SNK900203R0000	20	1.70
		For test plugs DIA 4 mm 0.157 in			TP4	1SNK900205R0000	20	2.40
3	**Test connectors**	5.2 mm 0.205 in spacing		Dark grey	TC5	1SNK900200R0000	10	5.20
		End module, 5.2 mm 0.205 in			TC5-R1	1SNK900201R0000	10	5.20
4	**Locking devices**	9.4 mm 0.370 in spacing		Black	VR-ZD	1SNK900637R0000	50	0.7
5	**Strain Relief**			Dark grey	PT-ZD	1SNK900660R0000	50	1.04
6	**Terminal block markers**	Blank card		White	MC512	1SNK140000R0000	22	9.00
					MC512PA	1SNK149999R0000	20	10.00
		Blank strip label			MG-CPMFA 43196	1SNB043196R0012	400	2.562
		Blank marker			MG-CPM 13 41790	1SNB041790R0512	1960	0.236
		Universal wire markers holder		Grey	UMH	1SNK900611R0000	10	0.20

Complete list of accessories is indicated in the terminal block datasheet including end stops.
Some accessories such as jumper bars may modify the terminal block's ratings: Complete information available in the accessories section of the catalog.

Technical data valid for copper conductors only.

1SNK164031S0201

CDK2.5-2P-J PI-Spring female plugs

Female plug - 5.2 mm 0.205 in spacing

2.5 mm²

12 AWG

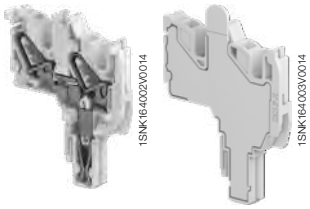

CDK2.5-2P-J **CDK2.5-2P-J-E**

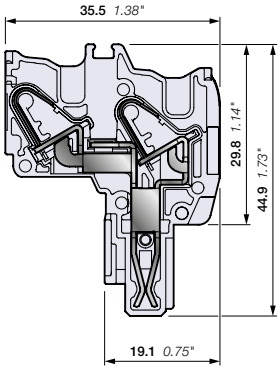

5.2 mm 0.205 in spacing

Description

- Create your own female plug assemblies without any special tools, easily snap together multiple plugs for optimal ergonomics and quick assembly,
- Increase your flexibility: eliminate stock of pre-configured female plugs, easily add an extra plug in case of needed modification,
- Reduce your stock of unitary plugs up to 30%: only two plug variants are required to compose your own subsets of plugs from 2 to 15 poles.

Description	Color	Type	Part Number	Pkg qty	Weight (1 pce) g
Female plugs	Grey	CDK2.5-2P-J	1SNK805740R0000	50	5.37
	Blue	CDK2.5-2P-J-BL	1SNK805746R0000	50	5.37
	Green-yellow	CDK2.5-2P-J-PE	1SNK805751R0000	50	5.37
Female plugs without outer nubs - Closed	Grey	CDK2.5-2P-J-E	1SNK805741R0000	50	5.74
	Blue	CDK2.5-2P-J-BL-E	1SNK805747R0000	50	5.74
	Green-yellow	CDK2.5-2P-J-PE-E	1SNK805752R0000	50	5.74

Main technical data

Connecting capacity		IEC	UL - CSA
1 conductor per clamp	Rigid: Solid/Stranded	0.2 ... 4 mm²	26 ... 12 AWG
	Flexible without ferrule	0.22 ... 2.5 mm²	
	Flexible with non insulated ferrule	0.22 ... 2.5 mm²	26 ... 14 AWG
	Flexible with insulated ferrule	0.22 ... 2.5 mm²	26 ... 14 AWG
2 conductors per clamp	Flexible with twin ferrule	0.22 ... 0.5 mm²	26 ... 20 AWG
Rated current / Rated cross section		24 A / 2.5 mm²	20 A / 12 AWG
Rated short-time withstand current (1s)		300 A	
Rated voltage		500 V	600 V
Impulse withstand voltage		6000 V	
Protection		IP20	NEMA 1

Mounting instructions

Rail		
Wire stripping length		11 mm 0.433 in
Tool (for flexible conductor without ferrule)		Flat screwdriver Ø 3.5 mm Ø 0.138 in

The connecting capacity data for one Rigid: Solid/Stranded, or one Flexible conductor (when applicable) is a mandatory information required by IEC, UL and CSA standards (Copper conductors). All other data are provided as supplementary information only. For more details, please consult our CB, UL or CSA certificates and technical datasheet available on http://www.TE.com

CE CB RoHS USR CNR CSA EAC BV

Mounting instructions

15 poles max.

Accessories

	Description			Color	Type	Part Number	Pkg qty	Weight (1 pce) g
1	**Jumper bars**	2 poles	32 A (IEC)	Orange	JB5-2	1SNK905302R0000	50	1.30
		3 poles	32 A (IEC)		JB5-3	1SNK905303R0000	50	2.00
		4 poles	32 A (IEC)		JB5-4	1SNK905304R0000	50	2.70
		5 poles	32 A (IEC)		JB5-5	1SNK905305R0000	50	3.50
		10 poles	32 A (IEC)		JB5-10	1SNK905310R0000	30	7.10
		50 poles	32 A (IEC)		JB5-50	1SNK905350R0000	10	36.00
2	**Test adapters**	For test plugs DIA 2 mm 0.079 in		Dark grey	TP2	1SNK900203R0000	20	1.70
		For test plugs DIA 4 mm 0.157 in			TP4	1SNK900205R0000	20	2.40
3	**Test connectors**	5.2 mm 0.205 in spacing		Dark grey	TC5	1SNK900200R0000	10	5.20
		End module, 5.2 mm 0.205 in			TC5-R1	1SNK900201R0000	10	5.20
4	**Locking devices**	9.4 mm 0.370 in spacing		Black	VR-ZD	1SNK900637R0000	50	0.7
5	**Strain Relief**			Dark grey	PT-ZD	1SNK900660R0000	50	1.04
6	**Terminal block markers**	Blank card		White	MC512	1SNK140000R0000	22	9.00
					MC512PA	1SNK149999R0000	20	10.00
		Blank strip label			MG-CPMFA 43196	1SNB043196R0012	400	2.562
		Blank marker			MG-CPM 13 41790	1SNB041790R0512	1960	0.236
		Universal wire markers holder		Grey	UMH	1SNK900611R0000	10	0.20

Complete list of accessories is indicated in the terminal block datasheet including end stops.
Some accessories such as jumper bars may modify the terminal block's ratings: Complete information available in the accessories section of the catalog.

Technical data valid for copper conductors only.

1SNK164032S0201

CDK4 PI-Spring female plugs

Female plug - 6 mm 0.236 in spacing

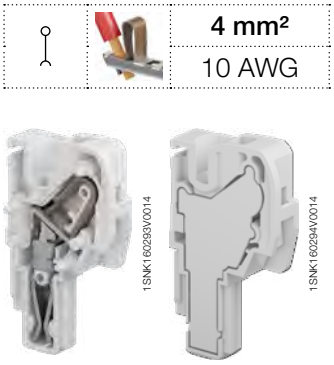

CDK4 CDK4-E

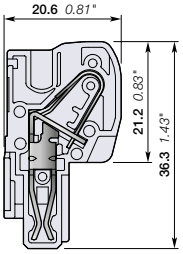

6 mm 0.236 in spacing

	4 mm²
	10 AWG

Description

- Create your own female plug assemblies without any special tools, easily snap together multiple plugs for optimal ergonomics and quick assembly,
- Increase your flexibility: eliminate stock of pre-configured female plugs, easily add an extra plug in case of needed modification,
- Reduce your stock of unitary plugs up to 30%: only two plug variants are required to compose your own subsets of plugs from 2 to 15 poles.

Ordering details

Description	Color	Type	Part Number		Pkg qty	Weight (1 pce) g
Female plugs	Grey	CDK4	1SNK806712R0000		50	3.80
Female plugs without outer nubs - Closed		CDK4-E	1SNK806713R0000		50	4.50

Main technical data

Connecting capacity		IEC	UL - CSA
1 conductor per clamp	Rigid: Solid/Stranded	0.5 ... 6 mm²	26 ... 10 AWG
	Flexible without ferrule	0.5 ... 4 mm²	
	Flexible with non insulated ferrule	0.5 ... 4 mm²	26 ... 12 AWG
	Flexible with insulated ferrule	0.5 ... 4 mm²	26 ... 12 AWG
2 conductors per clamp	Flexible with twin ferrule	0.5 ... 1 mm²	26 ... 18 AWG
Rated current / Rated cross section		30 A / 4 mm²	30 A / 10 AWG
Rated short-time withstand current (1s)		480 A	
Rated voltage		1000 V	600 V
Impulse withstand voltage		8000 V	
Protection		IP20	NEMA 1

Mounting instructions

Rail		
Wire stripping length		12.5 mm 0.492 in
Tool (for flexible conductor without ferrule)		Flat screwdriver Ø 3.5 mm Ø 0.138 in

The connecting capacity data for one Rigid: Solid/Stranded, or one Flexible conductor (when applicable) is a mandatory information required by IEC, UL and CSA standards (Copper conductors). All other data are provided as supplementary information only. For more details, please consult our CB, UL or CSA certificates and technical datasheet available on http://www.TE.com

CE CB RoHS USR CNR CSA EAC BV

Mounting instructions

15 poles max.

Accessories

	Description		Color	Type	Part Number		Pkg qty	Weight (1 pce) g
1	Locking devices	9.4 mm 0.370 in spacing	Black	VR-ZD	1SNK900637R0000		50	0.7
2	Cable Clamp	9.4 mm 0.370 in spacing	Dark grey	PT-ZD	1SNK900660R0000		50	1.04
3	Terminal block markers	Blank marker	White	MG-CPM 13 41791	1SNB041791R0612		1680	0.27
		Blank strip label		MG-CPMFA 43196	1SNB043196R0012		350	2.56
		Blank card		MC612	1SNK150000R0000		22	10.00
				MC612PA	1SNK159999R0000		20	11.00
		Universal wire markers holder	Grey	UMH	1SNK900611R0000		10	0.20

Complete list of accessories is indicated in the terminal block datasheet including end stops.
Some accessories such as jumper bars may modify the terminal block's ratings: Complete information available in the accessories section of the catalog.

1SNK164006S0201

Technical data valid for copper conductors only.

Screw clamp Pluggable

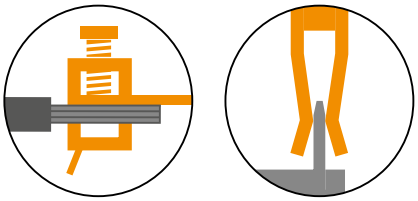

ZDS4-22 Screw clamp pluggable terminal blocks

Feed-through - 5.2 mm 0.205 in spacing

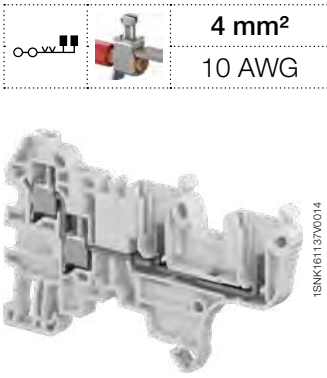

ZDS4-22

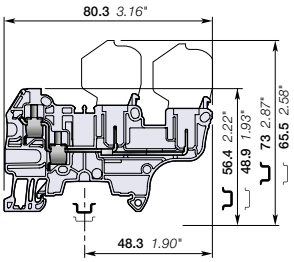

5.2 mm 0.205 in spacing

4 mm²
10 AWG

Description

- Increase your productivity with pluggable terminal blocks: possibility of pre-produced plugs harnesses, time saving plug and play assembly, reduced transportation panels preparation and final installation, easily connect sub-assemblies together,
- Simplify and secure your installation: in site faulty connection errors are eliminated, prior connection testing is eased and reliable, test connectors (TC5) withstanding 10 000 operations are compatible for convenient testing.

Ordering details

Description		Color	Type	Part Number		Pkg qty	Weight (1 pce) g
Feed-through	4 connections	Grey	ZDS4-22	1SNK805013R0000		50	10.80

Main technical data

Connecting capacity		IEC	UL - CSA
1 conductor per clamp	Rigid: Solid/Stranded	0.2 ... 4 mm²	24 ... 10 AWG
	Flexible without ferrule	0.22 ... 4 mm²	
	Flexible with non insulated ferrule	0.22 ... 4 mm²	24 ... 10 AWG
	Flexible with insulated ferrule	0.22 ... 2.5 mm²	24 ... 12 AWG
	Gauge	A3-B3	
2 conductors per clamp	Rigid: Solid/Stranded	0.2 ... 1.5 mm²	24 ... 16 AWG
	Flexible without ferrule	0.22 ... 1.5 mm²	
	Flexible with twin ferrule	0.22 ... 1.5 mm²	24 ... 16 AWG
Rated current / Rated cross section		29 A / 4 mm²	28 A / 10 AWG
Rated short-time withstand current (1s)		480 A	
Rated voltage		800 V	300 V
Impulse withstand voltage		8000 V	
Protection		IP20	NEMA 1

Mounting instructions

Rail	TH 35-7.5, TH 35-15
Wire stripping length	10.5 mm 0.413 in
Tool	Flat screwdriver Ø 3.5 mm Ø 0.138 in
Torque	0.6 Nm ± 0.1 5.31 lb.in ± 0.885

The connecting capacity data for one Rigid: Solid/Stranded, or one Flexible conductor (when applicable) is a mandatory information required by IEC, UL and CSA standards (Copper conductors). All other data are provided as supplementary information only. For more details, please consult our CB, UL or CSA certificates and technical datasheet available on http://www.TE.com

CE, CB, RoHS, USR CNR, CSA, EAC, BV

CDS4 CDS4-E

Female plugs

Description		Color	Type	Part Number		Pkg qty	Weight (1 pce) g
Female plugs	1 pole	Grey	CDS4	1SNK805714R0000		50	3.90
Female plugs without outer nubs - Closed			CDS4-E	1SNK805715R0000		50	4.10

15 poles max.

Accessories

	Description			Color	Type	Part Number		Pkg qty	Weight (1 pce) g
1	**End stops**	10 mm	0.394 in	Dark grey	BAM4	1SNK900001R0000		50	14.00
2	**End sections**	0.8 mm	0.031 in	Dark grey	EDS4-22	1SNK805911R0000		20	1.85
3	**Jumper bars**	2 poles	32 A (IEC)	Orange	JB5-2	1SNK905302R0000		50	1.30
		3 poles	32 A (IEC)		JB5-3	1SNK905303R0000		50	2.00
		4 poles	32 A (IEC)		JB5-4	1SNK905304R0000		50	2.70
		5 poles	32 A (IEC)		JB5-5	1SNK905305R0000		50	3.50
		10 poles	32 A (IEC)		JB5-10	1SNK905310R0000		30	7.10
		50 poles	32 A (IEC)		JB5-50	1SNK905350R0000		10	36.00
4	**Circuit separators**	3 mm	0.118 in	Dark grey	CS-R3	1SNK900107R0000		20	6.40
5	**Test adapters**	For test plugs DIA 2 mm 0.079 in		Dark grey	TP2	1SNK900203R0000		20	1.70
		For test plugs DIA 4 mm 0.157 in			TP4	1SNK900205R0000		20	2.40
6	**Test connectors**	5.2 mm 0.205 in spacing		Dark grey	TC5	1SNK900200R0000		10	5.20
		End module, 5.2 mm 0.205 in			TC5-R1	1SNK900201R0000		10	5.20
7	**Coding pegs**			Dark grey	COP-ZD	1SNK900636R0000		10	3.57
8	**Terminal block markers**	Blank marker		White	MG-CPM 13 41790	1SNB041790R0512		1960	0.23
		Blank card			MC512	1SNK140000R0000		22	9.00
					MC512PA	1SNK149999R0000		20	10.00
		Universal wire markers holder		Grey	UMH	1SNK900611R0000		10	0.20

Complete list of accessories is indicated in the terminal block datasheet including end stops.
Some accessories such as jumper bars may modify the terminal block's ratings: Complete information available in the accessories section of the catalog.

Technical data valid for copper conductors only.

CDS4 Screw clamp female plugs

Female plug - 5.2 mm 0.205 in spacing

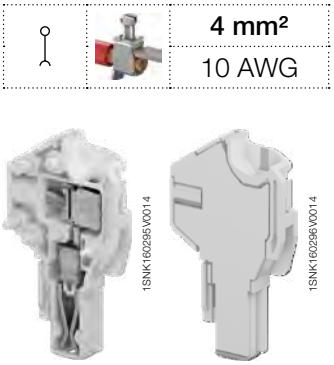

CDS4 CDS4-E

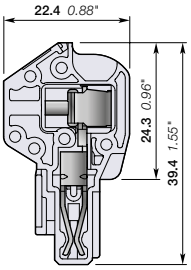

5.2 mm 0.205 in spacing

		4 mm²
		10 AWG

Description

- Create your own female plug assemblies without any special tools, easily snap together multiple plugs for optimal ergonomics and quick assembly,
- Increase your flexibility: eliminate stock of pre-configured female plugs, easily add an extra plug in case of needed modification,
- Reduce your stock of unitary plugs up to 30%: only two plug variants are required to compose your own subsets of plugs from 2 to 15 poles.

Ordering details

Description	Color	Type	Part Number		Pkg qty	Weight (1 pce) g
Female plugs	Grey	CDS4	1SNK805714R0000		50	3.90
Female plugs without outer nubs - Closed		CDS4-E	1SNK805715R0000		50	4.10

Main technical data

Connecting capacity		IEC	UL - CSA
1 conductor per clamp	Rigid: Solid/Stranded	0.2 ... 4 mm²	24 ... 10 AWG
	Flexible without ferrule	0.22 ... 4 mm²	
	Flexible with non insulated ferrule	0.22 ... 4 mm²	24 ... 10 AWG
	Flexible with insulated ferrule	0.22 ... 2.5 mm²	24 ... 12 AWG
	Gauge	A3-B3	
2 conductors per clamp	Rigid: Solid/Stranded	0.2 ... 1.5 mm²	24 ... 16 AWG
	Flexible without ferrule	0.22 ... 1.5 mm²	
	Flexible with twin ferrule	0.22 ... 1.5 mm²	24 ... 16 AWG
Rated current / Rated cross section		29 A / 4 mm²	28 A / 10 AWG
Rated short-time withstand current (1s)		480 A	
Rated voltage		800 V	300 V
Impulse withstand voltage		8000 V	
Protection		IP20	NEMA 1

Mounting instructions

Rail		
Wire stripping length		10.5 mm 0.413 in
Tool		Flat screwdriver Ø 3.5 mm Ø 0.138 in
Torque		0.6 Nm ± 0.1 5.31 lb.in ± 0.885

The connecting capacity data for one Rigid: Solid/Stranded, or one Flexible conductor (when applicable) is a mandatory information required by IEC, UL and CSA standards (Copper conductors). All other data are provided as supplementary information only. For more details, please consult our CB, UL or CSA certificates and technical datasheet available on http://www.TE.com

CE CB RoHS USR CNR CSA EAC BV

Mounting instructions

15 poles max.

Accessories

	Description		Color	Type	Part Number		Pkg qty	Weight (1 pce) g
1	**Locking devices**	9.4 mm 0.370 in spacing	Black	VR-ZD	1SNK900637R0000		50	0.7
2	**Cable Clamp**	9.4 mm 0.370 in spacing	Dark grey	PT-ZD	1SNK900660R0000		50	1.04
3	**Terminal block markers**	Blank marker	White	MG-CPM 13 41790	1SNB041790R0512		1960	0.23
		Blank strip label		MG-CPMFA 43196	1SNB043196R0012		350	2.56
		Blank card		MC512	1SNK140000R0000		22	9.00
				MC512PA	1SNK149999R0000		20	10.00
		Universal wire markers holder	Grey	UMH	1SNK900611R0000		10	0.20

Complete list of accessories is indicated in the terminal block datasheet including end stops.
Some accessories such as jumper bars may modify the terminal block's ratings: Complete information available in the accessories section of the catalog.

1SNK164007S0201

Technical data valid for copper conductors only.

ZDS4-22-R1 Screw clamp pluggable terminal blocks

Feed-through - 6 mm 0.236 in spacing

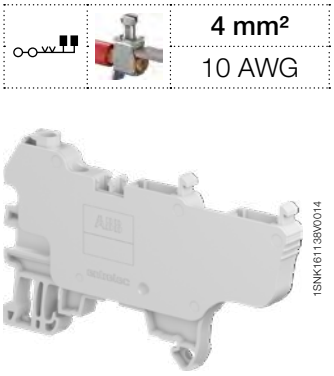

4 mm²
10 AWG

1SNK161138R0014

ZDS4-22-R1

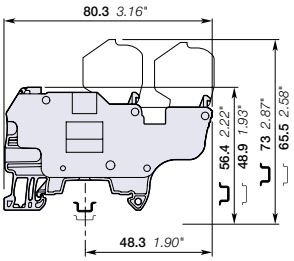

6 mm 0.236 in spacing

Description

- Increase your productivity with pluggable terminal blocks: possibility of pre-produced plugs harnesses, time saving plug and play assembly, reduced transportation panels preparation and final installation, easily connect sub-assemblies together,
- Simplify and secure your installation: in site faulty connection errors are eliminated, prior connection testing is eased and reliable, test connectors (TC5-R1 + ES-TC6) withstanding 10 000 operations are compatible for convenient testing.

Ordering details

Description		Color	Type	Part Number		Pkg qty	Weight (1 pce) g
Feed-through	4 connections	Grey	ZDS4-22-R1	1SNK806013R0000		40	12.60

Main technical data

Connecting capacity		IEC	UL - CSA
1 conductor per clamp	Rigid: Solid/Stranded	0.2 ... 4 mm²	24 ... 10 AWG
	Flexible without ferrule	0.22 ... 4 mm²	
	Flexible with non insulated ferrule	0.22 ... 4 mm²	24 ... 10 AWG
	Flexible with insulated ferrule	0.22 ... 4 mm²	24 ... 10 AWG
	Gauge	A3-B3	
2 conductors per clamp	Rigid: Solid/Stranded	0.2 ... 1.5 mm²	24 ... 16 AWG
	Flexible without ferrule	0.22 ... 1.5 mm²	
	Flexible with twin ferrule	0.22 ... 1.5 mm²	24 ... 16 AWG
Rated current / Rated cross section		29 A / 4 mm²	28 A / 10 AWG
Rated short-time withstand current (1s)		480 A	
Rated voltage		800 V	300 V
Impulse withstand voltage		8000 V	
Protection		IP20	NEMA 1

Mounting instructions

Rail	TH 35-7.5, TH 35-15
Wire stripping length	10.5 mm 0.413 in
Tool	Flat screwdriver Ø 3.5 mm Ø 0.138 in
Torque	0.6 Nm ± 0.1 5.31 lb.in ± 0.885

The connecting capacity data for one Rigid: Solid/Stranded, or one Flexible conductor (when applicable) is a mandatory information required by IEC, UL and CSA standards (Copper conductors). All other data are provided as supplementary information only. For more details, please consult our CB, UL or CSA certificates and technical datasheet available on http://www.TE.com

CE | CB | RoHS | USR CNR | CSA | EAC | BV

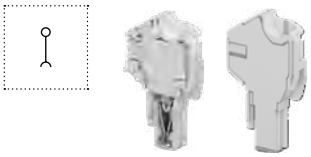

CDS4-R1 CDS4-E

Female plugs

Description		Color	Type	Part Number		Pkg qty	Weight (1 pce) g
Female plugs	1 pole	Grey	CDS4-R1	1SNK806714R0000		50	4.10
Female plugs without outer nubs - Closed			CDS4-E	1SNK805715R0000		50	4.10

15 poles max.

Accessories

	Description			Color	Type	Part Number		Pkg qty	Weight (1 pce) g
1	**End stops**	10 mm	0.394 in	Dark grey	BAM4	1SNK900001R0000		50	14.00
2	**Jumper bars**	2 poles	41 A (IEC)	Orange	JB6-2	1SNK906302R0000		50	1.30
		3 poles	41 A (IEC)		JB6-3	1SNK906303R0000		50	2.10
		4 poles	41 A (IEC)		JB6-4	1SNK906304R0000		50	2.90
		5 poles	41 A (IEC)		JB6-5	1SNK906305R0000		50	3.60
		10 poles	41 A (IEC)		JB6-10	1SNK906310R0000		20	7.40
		50 poles	41 A (IEC)		JB6-50	1SNK906350R0000		10	38.10
3	**Circuit separators**	3 mm	0.118 in	Dark grey	CS-R3	1SNK900107R0000		20	6.40
4	**Test adapters**	For test plugs DIA 2 mm 0.079 in		Dark grey	TP2	1SNK900203R0000		20	1.70
		For test plugs DIA 4 mm 0.157 in			TP4	1SNK900205R0000		20	2.40
5	**Test connectors**	End module, 5.2 mm 0.205 in		Dark grey	TC5-R1	1SNK900201R0000		10	5.20
6	**Spacers**	0.8 mm	0.031 in	Dark grey	ES-TC6	1SNK900105R0000		10	0.80
7	**Coding pegs**			Dark grey	COP-ZD	1SNK900636R0000		10	3.57
8	**Terminal block markers**	Blank marker		White	MG-CPM 13 41791	1SNB041791R0612		1680	0.27
		Blank card			MC612	1SNK150000R0000		22	10.00
					MC612PA	1SNK159999R0000		20	11.00
		Universal wire markers holder		Grey	UMH	1SNK900611R0000		10	0.20

Complete list of accessories is indicated in the terminal block datasheet including end stops.
Some accessories such as jumper bars may modify the terminal block's ratings: Complete information available in the accessories section of the catalog.

1SNK164004S0201

Technical data valid for copper conductors only.

CDS4-R1 Screw clamp female plugs

Female plug - 6 mm 0.236 in spacing

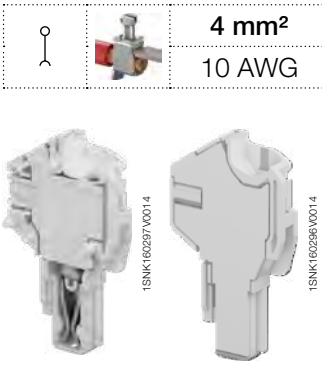

CDS4-R1 CDS4-E

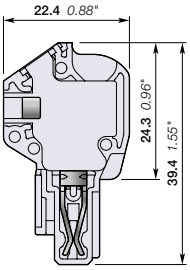

6 mm 0.236 in spacing

		4 mm²
		10 AWG

Description

- Create your own female plug assemblies without any special tools, easily snap together multiple plugs for optimal ergonomics and quick assembly,
- Increase your flexibility: eliminate stock of pre-configured female plugs, easily add an extra plug in case of needed modification,
- Reduce your stock of unitary plugs up to 30%: only two plug variants are required to compose your own subsets of plugs from 2 to 15 poles.

Ordering details

Description	Color	Type	Part Number		Pkg qty	Weight (1 pce) g
Female plugs	Grey	CDS4-R1	1SNK806714R0000		50	4.10
Female plugs without outer nubs - Closed		CDS4-E	1SNK805715R0000		50	4.10

Main technical data

Connecting capacity		IEC	UL - CSA
1 conductor per clamp	Rigid: Solid/Stranded	0.2 ... 4 mm²	24 ... 10 AWG
	Flexible without ferrule	0.22 ... 4 mm²	
	Flexible with non insulated ferrule	0.22 ... 4 mm²	24 ... 10 AWG
	Flexible with insulated ferrule	0.22 ... 4 mm²	24 ... 10 AWG
	Gauge	A3-B3	
2 conductors per clamp	Rigid: Solid/Stranded	0.2 ... 1.5 mm²	24 ... 16 AWG
	Flexible without ferrule	0.22 ... 1.5 mm²	
	Flexible with twin ferrule	0.22 ... 1.5 mm²	24 ... 16 AWG
Rated current / Rated cross section		29 A / 4 mm²	28 A / 10 AWG
Rated short-time withstand current (1s)		480 A	
Rated voltage		800 V	300 V
Impulse withstand voltage		8000 V	
Protection		IP20	NEMA 1

Mounting instructions

Rail		
Wire stripping length		10.5 mm 0.413 in
Tool		Flat screwdriver Ø 3.5 mm Ø 0.138 in
Torque		0.6 Nm ± 0.1 5.31 lb.in ± 0.885

The connecting capacity data for one Rigid: Solid/Stranded, or one Flexible conductor (when applicable) is a mandatory information required by IEC, UL and CSA standards (Copper conductors). All other data are provided as supplementary information only. For more details, please consult our CB, UL or CSA certificates and technical datasheet available on http://www.TE.com

CE CB RoHS USR CNR CSA EAC BV

Mounting instructions

15 poles max.

Accessories

	Description		Color	Type	Part Number		Pkg qty	Weight (1 pce) g
1	**Locking devices**	9.4 mm 0.370 in spacing	Black	VR-ZD	1SNK900637R0000		50	0.7
2	**Cable Clamp**	9.4 mm 0.370 in spacing	Dark grey	PT-ZD	1SNK900660R0000		50	1.04
3	**Terminal block markers**	Blank marker	White	MG-CPM 13 41791	1SNB041791R0612		1680	0.27
		Blank strip label		MG-CPMFA 43196	1SNB043196R0012		350	2.56
		Blank card		MC612	1SNK150000R0000		22	10.00
				MC612PA	1SNK159999R0000		20	11.00
		Universal wire markers holder	Grey	UMH	1SNK900611R0000		10	0.20

Complete list of accessories is indicated in the terminal block datasheet including end stops.
Some accessories such as jumper bars may modify the terminal block's ratings: Complete information available in the accessories section of the catalog.

Technical data valid for copper conductors only.

1SNK164008S0201

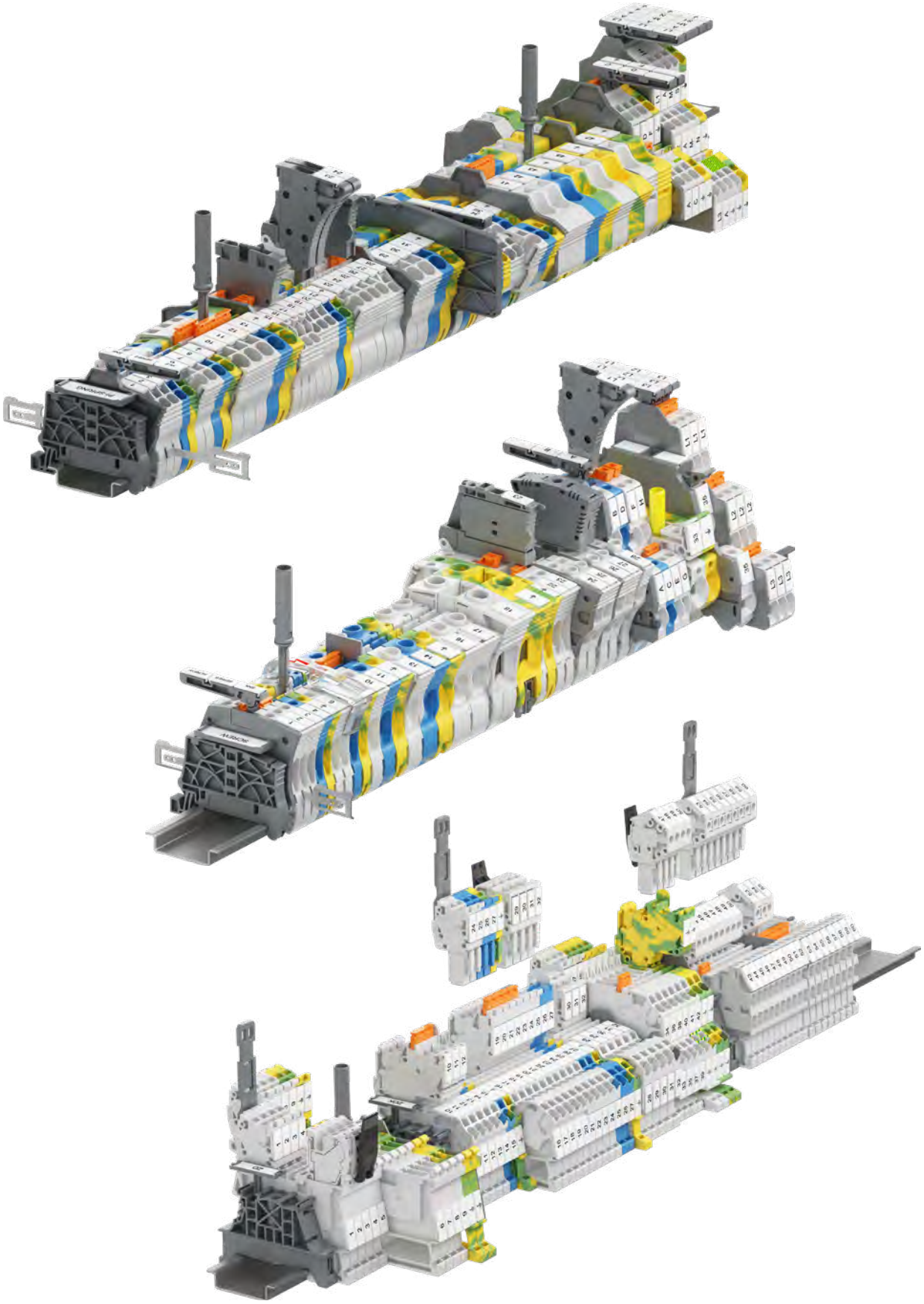

SNK series, terminal block accessories

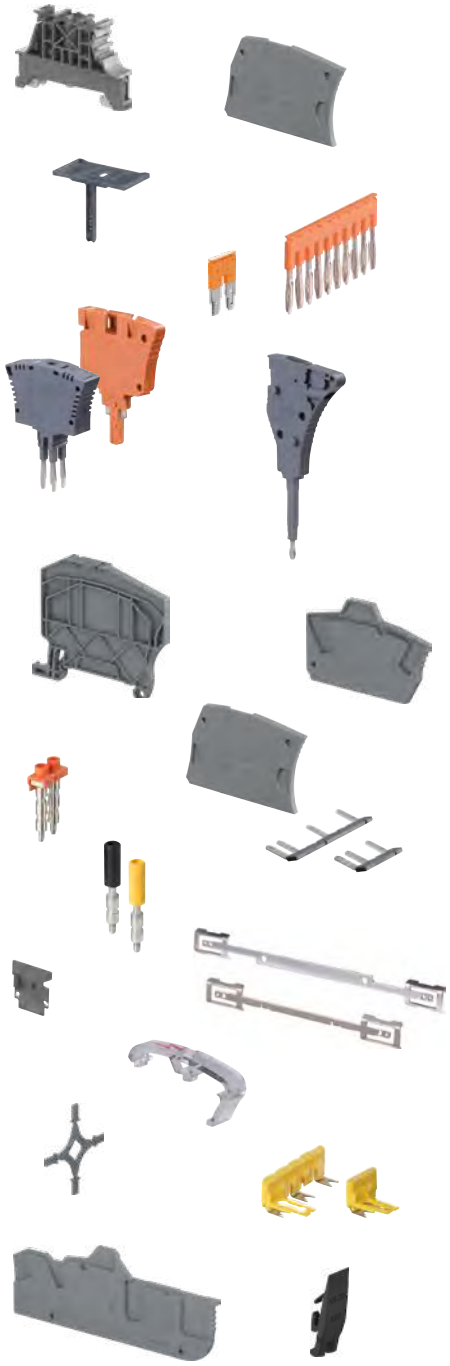

Common terminal block accessories

Mounting rail	**PR**	196-198
Screw end stops	**BAM4, BAZH1**	199
Screwless end stops	**BAZ1**	200
Label holders	**LH, LH-R1**	201
	LH-J	202
Screwless jumper bars	**JB5**	203
	JB6	204
	JB8	205
	JB10	206
	JB12	207
Cross spacing jumpers	**JB85-3**	208
Test adapters	**TP2, TP4**	209
Test connectors	**TC5**	210
Component plugs	**PG5-R2**	211
	PG5, PG5-R1	212
Screwdrivers	**TO**	213
Crimping tools	**PS**	213

PI-Spring terminal block accessories

End sections	**EK**	214-216
Circuit separators	**CS-R2, CS-R3**	217-218
Shield connectors	**SHBP, SHB**	219

Screw clamp terminal block accessories

End sections	**ES**	220-221
Screw jumper bars	**JB8**	222
	JB16, JB22	223
	JB26	224
	BJMI31, BJMI36	225
Lateral jumper bars	**PC8, PC81**	226
Circuit separator	**CS, CS-R1**	227
Shield connectors	**SHBS, SHB**	228
Protecting covers	**PL**	229
	CO, KCO	230
Short circuit bridges	**SC-JB8**	231
Test sockets	**AJS9**	232

Pluggable terminal block accessories

End sections	**EDK, EDS**	233-234
Coding pegs	**COP**	235
Locking devices	**VR**	235

1SNK500072F0000

PR30

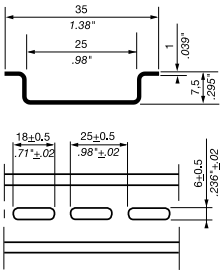

2000 mm 78.74 in spacing

Description

- Pre-punched symmetrical mounting rail,
- The slotted holes ease the mounting and allow to use existing and/or numerous fixings,
- Particularly well designed for fixing onto back-plates and for terminal assemblies of small dimensions.

Ordering details

Description	Color	Type	Part Number		Pkg meter	Weight (1 pce) g
Prepunched rail		PR30	1SNA173220R0500		2	328.00

Please note that for all rails: 1 part number equal 1 meter (39 in). Packing of 2 meters (78 in) minimum.
Check that your order quantity is a multiple of 2.

Main technical data

Material	Zinc plating and passivation steel	
Rail	TH 35-7.5	
	IEC	UL - CSA
Equivalent E-Cu cross section		

All the main technical data provided are "manufacturer" values.

RoHS
RoHS

Mounting instructions

- In order to guarantee the performances and security of your installation, please ensure the rail and its fixings can withstand the static and dynamic loads of the components mounted on it;
- To prevent the rail from flexing (1 mm 0.039 in rail thickness only), fixing is recommended every 250 mm 9.84 in;
- To prevent any issues during mounting, screw heads used for rail fixing should not protrude from the rail (7,5 mm 0.295 in rail height only).

1SNK500073F0000

PR3.Z2

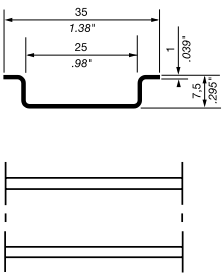

2000 mm 78.74 in spacing

Description

- Symmetrical mounting rail complying with IEC60715,
- Particularly well designed for fixing onto back-plates and for terminal assemblies of small dimensions.

Ordering details

Description	Color	Type	Part Number		Pkg meter	Weight (1 pce) g
		PR3.Z2	1SNA174300R1700		2	718.00

Please note that for all rails: 1 part number equal 1 meter (39 in). Packing of 2 meters (78 in) minimum.
Check that your order quantity is a multiple of 2.

Main technical data

Material	Zinc plating and passivation steel	
Rail	TH 35-7.5	
	IEC	UL - CSA
Equivalent E-Cu cross section	16 mm²	

All the main technical data provided are "manufacturer" values.

RoHS
RoHS

Mounting instructions

- In order to guarantee the performances and security of your installation, please ensure the rail and its fixings can withstand the static and dynamic loads of the components mounted on it;
- To prevent the rail from flexing (1 mm 0.039 in rail thickness only), fixing is recommended every 250 mm 9.84 in;
- To prevent any issues during mounting, screw heads used for rail fixing should not protrude from the rail (7,5 mm 0.295 in rail height only).

1SNK160017S0201

Technical data valid for copper conductors only.

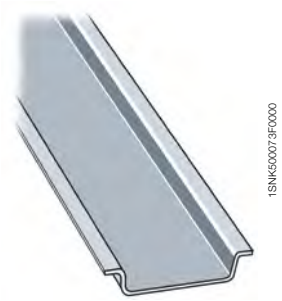

PR3.G2

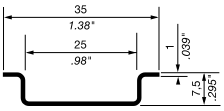

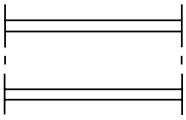

2000 mm 78.74 in spacing

Description

- Symmetrical mounting rail made of galvanised steel, complying with IEC60715,
- Particularly well designed for fixing onto back-plates and for terminal assemblies of small dimensions.

Ordering details

Description	Color	Type	Part Number		Pkg meter	Weight (1 pce) g
		PR3.G2	1SNA164800R0300		2	718.00

Please note that for all rails: 1 part number equal 1 meter (39 in). Packing of 2 meters (78 in) minimum.
Check that your order quantity is a multiple of 2.

Main technical data

Material	Galvanised steel	
Rail	TH 35-7.5	
	IEC	UL - CSA
Equivalent E-Cu cross section	16 mm²	

All the main technical data provided are "manufacturer" values.

RoHS
RoHS

Mounting instructions

- In order to guarantee the performances and security of your installation, please ensure the rail and its fixings can withstand the static and dynamic loads of the components mounted on it;
- To prevent the rail from flexing (1 mm 0.039 in rail thickness only), fixing is recommended every 250 mm 9.84 in;
- To prevent any issues during mounting, screw heads used for rail fixing should not protrude from the rail (7,5 mm 0.295 in rail height only).

PR50

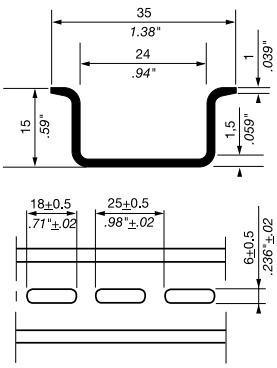

2000 mm 78.74 in spacing

Description

- Pre-punched symmetrical mounting rail,
- The slotted holes ease the mounting and allow to use existing and/or numerous fixings.

Ordering details

Description	Color	Type	Part Number		Pkg meter	Weight (1 pce) g
Preprunched rail		PR50	1SNA178529R0400		2	1288.00

Please note that for all rails: 1 part number equal 1 meter (39 in). Packing of 2 meters (78 in) minimum.
Check that your order quantity is a multiple of 2.

Main technical data

Material	Zinc plating and passivation steel	
Rail	TH 35-15	
	IEC	UL - CSA
Equivalent E-Cu cross section		

All the main technical data provided are "manufacturer" values.

RoHS
RoHS

Mounting instructions

- In order to guarantee the performances and security of your installation, please ensure the rail and its fixings can withstand the static and dynamic loads of the components mounted on it;
- To prevent the rail from flexing, fixing is recommended every 700 mm 27.6 in;
- In order to increase the accessibility of your terminal assembly, we recommend the use of our rail offset brackets EM45 (order code 1SNA008521R2600) for a 45° orientation of the rail.

1SNK160040S0201

Technical data valid for copper conductors only.

PR mounting rail
Common terminal block accessories

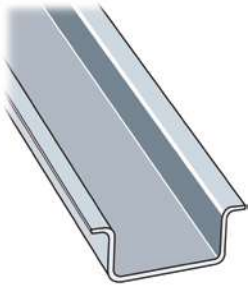

1SNK500075F0000

PR5

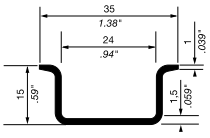

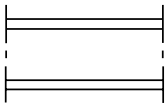

2000 mm 78.74 in spacing

Description

– Symmetrical mounting rail.

Ordering details

Description	Color	Type	Part Number		Pkg meter	Weight (1 pce) g
		PR5	1SNA168700R2200		2	1200.00

Please note that for all rails: 1 part number equal 1 meter (39 in). Packing of 2 meters (78 in) minimum.
Check that your order quantity is a multiple of 2.

Main technical data

Material	Zinc plating and passivation steel	
Rail	TH 35-15	
	IEC	UL - CSA
Equivalent E-Cu cross section		

All the main technical data provided are "manufacturer" values.

RoHS
RoHS

Mounting instructions

– In order to guarantee the performances and security of your installation, please ensure the rail and its fixings can withstand the static and dynamic loads of the components mounted on it;
– To prevent the rail from flexing, fixing is recommended every 700 mm 27.6 in;
– In order to increase the accessibility of your terminal assembly, we recommend the use of our rail offset brackets EM45 (order code 1SNA008521R2600) for a 45° orientation of the rail.

5

1SNK500076F0000

PR4

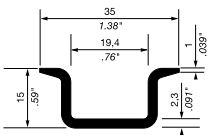

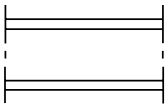

2000 mm 78.74 in spacing

Description

– Symmetrical mounting rail complying with IEC60715,
– The rigidity of the rail is maximised by the 2.3 mm 0.090 in thickness of the rail, and by its solid, non slotted construction,
– PR4 TH 35-15 is the most rigid mounting rail solution and it can suppo

Ordering details

Description	Color	Type	Part Number		Pkg meter	Weight (1 pce) g
Recommended for SNK ground terminal blocks up to 35 mm² 2 AWG		PR4	1SNA168500R1200		2	915.00

Please note that for all rails: 1 part number equal 1 meter (39 in). Packing of 2 meters (78 in) minimum.
Check that your order quantity is a multiple of 2.

Main technical data

Material	Zinc plating and passivation steel	
Rail	TH 35-15	
	IEC	UL - CSA
Equivalent E-Cu cross section	50 mm²	2 AWG

All the main technical data provided are "manufacturer" values.

RoHS
RoHS

Mounting instructions

– In order to guarantee the performances and security of your installation, please ensure the rail and its fixings can withstand the static and dynamic loads of the components mounted on it;
– To prevent the rail from flexing, fixing is recommended every 700 mm 27.6 in;
– In order to increase the accessibility of your terminal assembly, we recommend the use of our rail offset brackets EM45 (order code 1SNA008521R2600) for a 45° orientation of the rail.

1SNK160041S0201

Technical data valid for copper conductors only.

BAM4

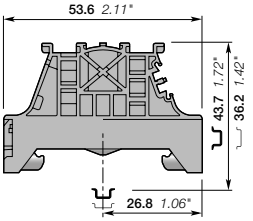

10 mm 0.394 in spacing

Mounting instructions

BAM4 screw end stops

Description

- Give efficient support to the SNK terminal blocks assemblies thanks to the BAM4 double gripping rail contact,
- Ease the assemblies identification with the BAM4 marking location compatible with all SNK markers and labels.

Ordering details

Description	Color	Type	Part Number		Pkg qty	Weight (1 pce) g
10 mm 0.394 in spacing	Dark grey	BAM4	1SNK900001R0000		50	14.00

Main technical data

Material specifications	Insulating material	Polyamide	
	Flammability	V0	
	NF F 16 101	I2F2	
Ambient temperature min/max	Service IEC 60068-2-1	-55 ... +110 °C	-67 ... +230 °F
	Storage	-55 ... +110 °C	-67 ... +230 °F
	Installing	-5 ... +40 °C	+23 ... +104 °F

Mounting instructions

Rail	TH 35-7.5, TH 35-15
Tool	Flat screwdriver Ø 5.5 mm Ø 0.217 in
Torque	0.9 Nm ± 0.1 7.08 lb.in ± 0.88

All the main technical data provided are "manufacturer" values

RoHS

Accessories

Description		Color	Type	Part Number		Pkg qty	Weight (1 pce) g
Terminal block markers	compatible with MG3	White	MG-CPM 13 41791	1SNB041791R0612		1680	0.27
Blank card	In polycarbonate		MC812	1SNK160000R0000		22	10.00
	In polyamide		MC812PA	1SNK169999R0000		20	14.00
Label holder	10 mm 0.394 in width	Dark grey	LH	1SNK900605R0000		50	0.60
	19.5 mm 0.768 in width		LH-R1	1SNK900607R0000		50	1.10
Universal wire markers holder	5.2 mm 0.205 in spacing	Grey	UMH	1SNK900611R0000		10	0.20

BAZH1

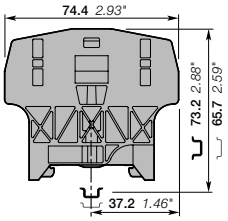

10 mm 0.394 in spacing

BAZH1 screw end stops

Description

- Give efficient support to the SNK double deck or power terminal blocks assemblies thanks to the BAZH1 double gripping rail contact,
- Ease the assemblies identification with label holders.

Ordering details

Description	Color	Type	Part Number		Pkg qty	Weight (1 pce) g
10 mm 0.394 in spacing	Dark grey	BAZH1	1SNK900102R0000		20	24.00

Main technical data

Material specifications	Insulating material	Polyamide	
	Flammability	V0	
	NF F 16 101	I2F2	
Ambient temperature min/max	Service IEC 60068-2-1	-55 ... +110 °C	-67 ... +230 °F
	Storage	-55 ... +110 °C	-67 ... +230 °F
	Installing	-5 ... +40 °C	+23 ... +104 °F

Mounting instructions

Rail	TH 35-7.5
Tool	Flat screwdriver Ø 5.5 mm Ø 0.217 in
Torque	1.3 Nm ± 0.1 11.4 lb.in ± 0.88

All the main technical data provided are "manufacturer" values

RoHS

Accessories

Description		Color	Type	Part Number		Pkg qty	Weight (1 pce) g
Terminal block markers	compatible with MG3	White	MG-CPM 13 41791	1SNB041791R0612		1680	0.27
Blank card	In polycarbonate		MC812	1SNK160000R0000		22	10.00
	In polyamide		MC812PA	1SNK169999R0000		20	14.00
Label holder	10 mm 0.394 in width	Dark grey	LH	1SNK900605R0000		50	0.60
	19.5 mm 0.768 in width		LH-R1	1SNK900607R0000		50	1.10
Universal wire markers holder	5.2 mm 0.205 in spacing	Grey	UMH	1SNK900611R0000		10	0.20

Technical data valid for copper conductors only.

1SNK160026S0201

BAZ1

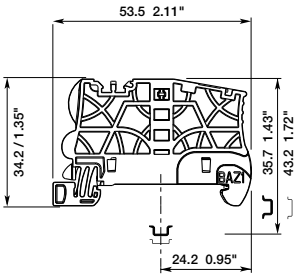

5.2 mm 0.205 in spacing

BAZ1 screwless end stops

Description

- Reduce the size of your terminal block assemblies with the screwless reduced spacing BAZ1 end stop,
- Ease the assemblies identification with various markers and label holders.

Ordering details

Description	Color	Type	Part Number		Pkg qty	Weight (1 pce) g
5.2 mm 0.205 in spacing	Dark grey	BAZ1	1SNK900002R0000		50	5.30

Main technical data

Material specifications	Insulating material	Polyamide	
	Flammability	V0	
	NF F 16 101	I2F2	
Ambient temperature min/max	Service IEC 60068-2-1	-55 ... +110 °C	-67 ... +230 °F
	Storage	-55 ... +110 °C	-67 ... +230 °F
	Installing	-5 ... +40 °C	+23 ... +104 °F

All the main technical data provided are "manufacturer" values

RoHS
RoHS

Mounting instructions

Rail		TH 35-7.5

Accessories

Description		Color	Type	Part Number		Pkg qty	Weight (1 pce) g
Terminal block markers	compatible with MG3	White	MG-CPM 13 41790	1SNB041790R0512		1960	0.23
Blank card	compatible with HTP500		MC512	1SNK140000R0000		22	9.00
	compatible with AMS600		MC512PA	1SNK149999R0000		20	10.00
Label holder	10 mm 0.394 in width	Dark grey	LH	1SNK900605R0000		50	0.60
	19.5 mm 0.768 in width		LH-R1	1SNK900607R0000		50	1.10
Universal wire markers holder	5.2 mm 0.205 in spacing	Grey	UMH	1SNK900611R0000		10	0.20

Technical data valid for copper conductors only.

1SNK160334V0014

LH

10 mm 0.394 in spacing

LH label holder

Description

- Easily identify your terminal blocks assembly with white or yellow labels,
- Adjustable in height for best visibility,
- Compatible with all SNK end stops.

Ordering details

Description	Color	Type	Part Number	Pkg qty	Weight (1 pce) g
10 mm 0.394 in width	Dark grey	LH	1SNK900605R0000	50	0.60

Main technical data

Material specifications	Insulating material	Polyamide	
	Flammability	V0	
	NF F 16 101	I2F2	
Ambient temperature min/max	Service IEC 60068-2-1	-55 ... +110 °C	-67 ... +230 °F
	Storage	-55 ... +110 °C	-67 ... +230 °F
	Installing	-5 ... +40 °C	+23 ... +104 °F

All the main technical data provided are "manufacturer" values

RoHS
RoHS

Accessories

Description		Color	Type	Part Number	Pkg qty	Weight (1 pce) g
Self-adhesive precut blank label	compatible with HTP500	White	MCLH	1SNK900630R0000	25	10.00
Self-adhesive precut blank label	compatible with HTP500	White	RCPEAD-TT	1SNA235158R0100	25	9.80
		Yellow	RCPEAD-TT-YL	1SNA235159R0200	25	12.10
Pre-printed cover marker	Protection for RCPEAD markers	Transparent	EPR2	1SNA399726R0700	10	4.00
Precut blank label	compatible with MG3	White	MG-TAR 45490	1SNB045490R8530	1650	0.371
Self-adhesive precut blank label	compatible with MG3	Yellow	MG-TAA 49448	1SNB049448R8530	825	0.55
		White	MG-TAA 49498	1SNB049498R8530	825	0.55
Self-adhesive precut blank label	compatible with HTP500	Yellow	MCLH-YL	1SNK900633R0000	25	10.00

5

1SNK160335V0014

LH

19.5 mm 0.768 in spacing

Mounting instructions

LH-R1 label holder

Description

- Easily identify your terminal blocks assembly with white or yellow labels,
- Adjustable in height for best visibility,
- Compatible with all SNK end stops.

Ordering details

Description	Color	Type	Part Number	Pkg qty	Weight (1 pce) g
19.5 mm 0.768 in width	Dark grey	LH-R1	1SNK900607R0000	50	1.10

Main technical data

Material specifications	Insulating material	Polyamide	
	Flammability	V0	
	NF F 16 101	I2F2	
Ambient temperature min/max	Service IEC 60068-2-1	-55 ... +110 °C	-67 ... +230 °F
	Storage	-55 ... +110 °C	-67 ... +230 °F
	Installing	-5 ... +40 °C	+23 ... +104 °F

All the main technical data provided are "manufacturer" values

RoHS
RoHS

Accessories

Description		Color	Type	Part Number	Pkg qty	Weight (1 pce) g
Self-adhesive precut blank label	compatible with HTP500	White	MCLH-R1	1SNK900631R0000	25	10.00
Precut blank label	compatible with AMS600	White	RCPEB	1SNA178430R0500	1	
	Protection for RCPEB markers	Transparent	EPR1	1SNA178431R2200	1	0.05
Self-adhesive precut blank label	compatible with HTP500	White	PIB2-TT	1SNA235155R2600	25	9.70
		Yellow	PIB2-TT-YL	1SNA235157R2000	25	9.40
Precut blank label	compatible with MG3	White	MG-TAR 45194	1SNB045194R1735	900	0.62
Self-adhesive precut blank label		Yellow	MG-TAA 49148	1SNB049148R1735	450	0.91
		White	MG-TAA 49198	1SNB049198R1735	450	0.91
Self-adhesive precut blank label	compatible with HTP500	Yellow	MCLH-R1-YL	1SNK900634R0000	25	10.00

1SNK160023S0201

Technical data valid for copper conductors only.

LH

4.8 mm 0.189 in spacing

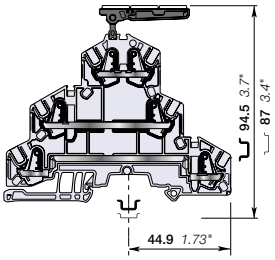

LH-J label holder

Description

Easily identify your block with three standard 5.2 mm 0.205 in spacing SNK markers. It fits in the jumper channel of the SNK terminal blocks.

Ordering details

Description	Color	Type	Part Number		Pkg qty	Weight (1 pce) g
Rotating label holder with three SNK markers housings - 4.8 mm 0.189 in spacing	Dark grey	LH-J	1SNK900606R0000		100	0.73

Main technical data

Material specifications	Insulating material	Polyamide	
	Flammability	V0	
	NF F 16 101	I2F2	
Ambient temperature min/max	Service IEC 60068-2-1	-55 ... +110 °C	-67 ... +230 °F
	Storage	-55 ... +110 °C	-67 ... +230 °F
	Installing	-5 ... +40 °C	+23 ... +104 °F

All the main technical data provided are "manufacturer" values

RoHS
RoHS

Accessories

Description		Color	Type	Part Number		Pkg qty	Weight (1 pce) g
Blank marker	compatible with MG3	White	MG-CPM 13 41790	1SNB041790R0512		1960	0.23
Blank card	compatible with HTP500	White	MC512	1SNK140000R0000		22	9.00
	compatible with AMS600	White	MC512PA	1SNK149999R0000		20	10.00
Universal wire markers holder	5.2 mm 0.205 in spacing	Grey	UMH	1SNK900611R0000		10	0.20

Technical data valid for copper conductors only.

1SNK160143F0014

JB5

5.2 mm 0.205 in spacing

Description

Facilitate & secure your jumper bar assembly process:
- Screwless mounting,
- Pre-cut poles for alternated jumpering between terminal blocks,
- Insulated,
- Positive locking,
- Perfectly adapted to low level electrical contact (20mA, 50mV).

Ordering details

Description		Color	Type	Part Number		Pkg qty	Weight (1 pce) g
5.2 mm 0.205 in spacing	2 poles	Orange	JB5-2	1SNK905302R0000		50	1.30
	3 poles		JB5-3	1SNK905303R0000		50	2.00
	4 poles		JB5-4	1SNK905304R0000		50	2.70
	5 poles		JB5-5	1SNK905305R0000		50	3.50
	10 poles		JB5-10	1SNK905310R0000		30	7.10
	50 poles		JB5-50	1SNK905350R0000		10	36.00

Main technical data

Material specifications	Insulating material	Polyamide				
	Flammability	V0				
	NF F 16 101	I2F3				
Ambient temperature min/max	Service IEC 60068-2-1	-55 ... +110 °C	-67 ... +230 °F			
	Storage	-55 ... +110 °C	-67 ... +230 °F			
	Installing	-5 ... +40 °C	+23 ... +104 °F			

		IEC	UL - CSA	Ex e
Rated current		32 A	30 A	
Rated voltage	1 - Standard use	1000 V	600 V	Please
	2 - Cut extremities	800 V	300 V	consult
	3 - Cut poles	630 V	300 V	us
	4 - Alternated poles	400 V	150 V	
	5 - Alternated poles with cut extremities	400 V	150 V	
Impulse withstand voltage		8000 V		
Protection		IP20	NEMA 1	

All the main technical data are indicative "manufacturer" values.

RoHS
RoHS

Mounting instructions

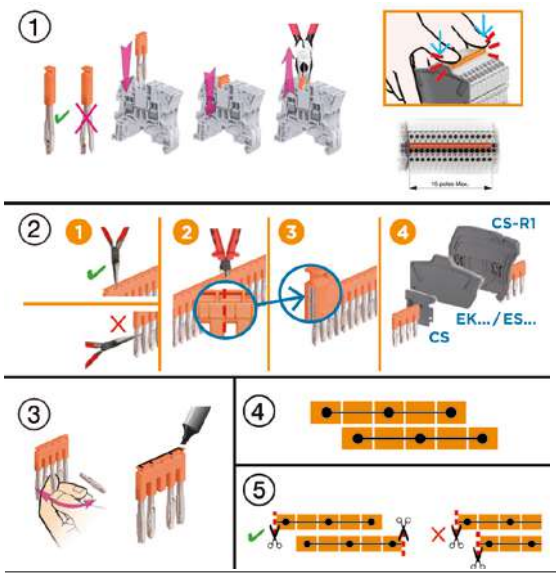

1 - Standard use

2 - Cut extremities

For voltage rating > 50 V and Uimp > 2.5 KV, the below accessories must be installed on the cut side of the jumper to guarantee IP20 and voltage rating:

ZS...	Feed-through	CS circuit separator
	Double deck / triple deck	ES... end section
ZK...	All functions	EK... end section

Ensure a good straight cut by positioning the cutting tool on the vertical snicks of the insulated part of the jumper.

15 poles max. recommended for convenient mounting.

3 - Cut poles

4 - Alternated poles

5 - Alternated poles with cut extremities

When using cut jumpers, cut extremities should be placed oppositely to allow end sections / circuit separators placement at each cut extremities.

For all other applications, please consult us.

1SNK160027S0201

Technical data valid for copper conductors only.

JB6 screwless jumper bars
Common terminal block accessories

JB6

6 mm 0.236 in spacing

Description

Facilitate & secure your jumper bar assembly process:
- Screwless mounting,
- Pre-cut poles for alternated jumpering between terminal blocks,
- Insulated,
- Positive locking,
- Perfectly adapted to low level electrical contact (20mA, 50mV).

Ordering details

Description		Color	Type	Part Number		Pkg qty	Weight (1 pce) g
6 mm 0.236 in spacing	2 poles	Orange	JB6-2	1SNK906302R0000		50	1.30
	3 poles		JB6-3	1SNK906303R0000		50	2.10
	4 poles		JB6-4	1SNK906304R0000		50	2.90
	5 poles		JB6-5	1SNK906305R0000		50	3.60
	10 poles		JB6-10	1SNK906310R0000		20	7.40
	50 poles		JB6-50	1SNK906350R0000		10	38.10

Main technical data

Material specifications	Insulating material	Polyamide	
	Flammability	V0	
	NF F 16 101	I2F3	
Ambient temperature min/max	Service IEC 60068-2-1	-55 ... +110 °C	-67 ... +230 °F
	Storage	-55 ... +110 °C	-67 ... +230 °F
	Installing	-5 ... +40 °C	+23 ... +104 °F

		IEC	UL - CSA	Ex e
Rated current		41 A	30 A	
Rated voltage	1 - Standard use	1000 V	600 V	Please consult
	2 - Cut extremities	800 V	300 V	our dedicated
	3 - Cut poles	630 V	300 V	certificates
	4 - Alternated poles	400 V	150 V	
	5 - Alternated poles with cut extremities	400 V	150 V	
Impulse withstand voltage		8000 V		
Protection		IP20	NEMA 1	

All the main technical data are indicative "manufacturer" values.

RoHS
RoHS

Mounting instructions

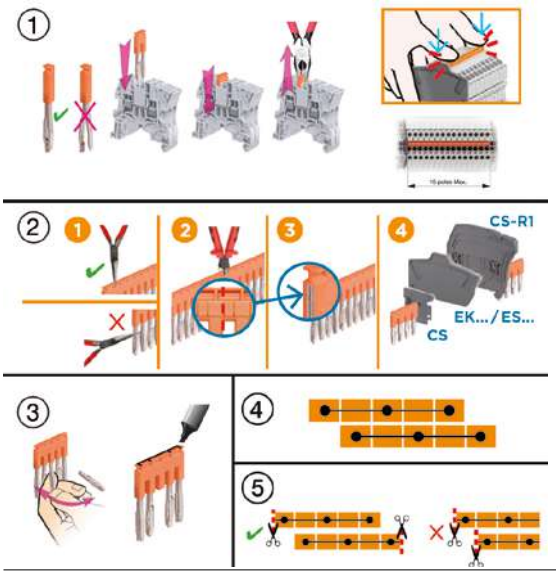

1 - Standard use

2 - Cut extremities

For voltage rating > 50 V and Uimp > 2.5 KV, the below accessories must be installed on the cut side of the jumper to guarantee IP20 and voltage rating:

ZS...	Feed-through	CS circuit separator
	Double deck / triple deck	ES... end section
ZK...	All functions	EK... end section

Ensure a good straight cut by positioning the cutting tool on the vertical snicks of the insulated part of the jumper.

15 poles max. recommended for convenient mounting.

3 - Cut poles

4 - Alternated poles

5 - Alternated poles with cut extremities

When using cut jumpers, cut extremities should be placed oppositely to allow end sections / circuit separators placement at each cut extremities.

For all other applications, please consult us.

1SNK160029S0201

Technical data valid for copper conductors only.

JB8 screwless jumper bars
Common terminal block accessories

JB8

8 mm 0.315 in spacing

Description

Facilitate & secure your jumper bar assembly process:
- Screwless mounting,
- Pre-cut poles for alternated jumpering between terminal blocks,
- Insulated,
- Positive locking,
- Perfectly adapted to low level electrical contact (20mA, 50mV).

Ordering details

Description		Color	Type	Part Number	Pkg qty	Weight (1 pce) g
8 mm 0.315 in spacing	2 poles	Orange	JB8-2	1SNK908302R0000	50	2.70
	3 poles		JB8-3	1SNK908303R0000	50	4.10
	4 poles		JB8-4	1SNK908304R0000	50	5.60
	5 poles		JB8-5	1SNK908305R0000	40	7.00
	10 poles		JB8-10	1SNK908310R0000	20	14.20

Main technical data

Material specifications	Insulating material	Polyamide	
	Flammability	V0	
	NF F 16 101	I2F3	
Ambient temperature min/max	Service IEC 60068-2-1	-55 ... +110 °C	-67 ... +230 °F
	Storage	-55 ... +110 °C	-67 ... +230 °F
	Installing	-5 ... +40 °C	+23 ... +104 °F

		IEC	UL - CSA	Ex e
Rated current		57 A	42 A	
Rated voltage	1 - Standard use	1000 V	600 V	693 V
	2 - Cut extremities	800 V	300 V	440 V
	3 - Cut poles	630 V	300 V	440 V
	4 - Alternated poles	630 V	150 V	352 V
	5 - Alternated poles with cut extremities	630 V	150 V	352 V
Impulse withstand voltage		6000 V		
Protection		IP20	NEMA 1	

All the main technical data are indicative "manufacturer" values.

RoHS
RoHS

Mounting instructions

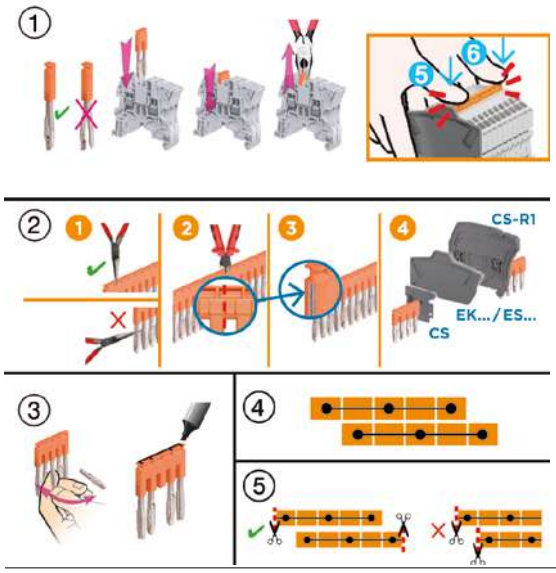

1 - Standard use

2 - Cut extremities

For voltage rating > 50 V and Uimp > 2.5 KV, the below accessories must be installed on the cut side of the jumper to guarantee IP20 and voltage rating:

ZS...	Feed-through	CS circuit separator
	Double deck / triple deck	ES... end section
ZK...	All functions	EK... end section

Ensure a good straight cut by positioning the cutting tool on the vertical snicks of the insulated part of the jumper.

3 - Cut poles

4 - Alternated poles

5 - Alternated poles with cut extremities

When using cut jumpers, cut extremities should be placed oppositely to allow end sections / circuit separators placement at each cut extremities.

For all other applications, please consult us.

1SNK160030S0201

Technical data valid for copper conductors only.

JB10 screwless jumper bars
Common terminal block accessories

JB10

10 mm 0.394 in spacing

Description

Facilitate & secure your jumper bar assembly process:
- Screwless mounting,
- Pre-cut poles for alternated jumpering between terminal blocks,
- Insulated,
- Positive locking,
- Perfectly adapted to low level electrical contact (20mA, 50mV).

Ordering details

Description		Color	Type	Part Number	Pkg qty	Weight (1 pce) g
10 mm 0.394 in spacing	2 poles	Orange	JB10-2	1SNK910302R0000	50	4.60
	3 poles		JB10-3	1SNK910303R0000	50	7.10
	4 poles		JB10-4	1SNK910304R0000	40	9.40
	5 poles		JB10-5	1SNK910305R0000	30	12.00
	10 poles		JB10-10	1SNK910310R0000	20	24.00

Main technical data

Material specifications	Insulating material	Polyamide	
	Flammability	V0	
	NF F 16 101	I2F3	
Ambient temperature min/max	Service IEC 60068-2-1	-55 ... +110 °C	-67 ... +230 °F
	Storage	-55 ... +110 °C	-67 ... +230 °F
	Installing	-5 ... +40 °C	+23 ... +104 °F

		IEC	UL - CSA	Ex e
Rated current		76 A	67 A	
Rated voltage	1 - Standard use	1000 V	600 V	693 V
	2 - Cut extremities	800 V	300 V	440 V
	3 - Cut poles	630 V	300 V	440 V
	4 - Alternated poles	400 V	150 V	275 V
	5 - Alternated poles with cut extremities	250 V	150 V	176 V
Impulse withstand voltage		6000 V		
Protection		IP20	NEMA 1	

All the main technical data are indicative "manufacturer" values.

RoHS
RoHS

Mounting instructions

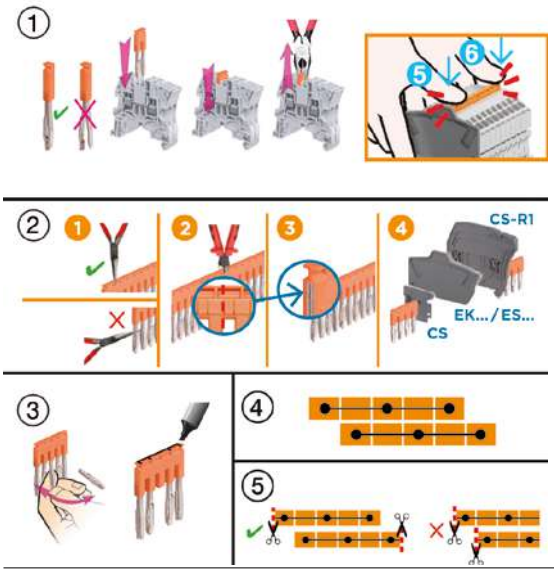

1 - Standard use

2 - Cut extremities

For voltage rating > 50 V and Uimp > 2.5 KV, the below accessories must be installed on the cut side of the jumper to guarantee IP20 and voltage rating:

ZS...	Feed-through	CS circuit separator
	Double deck / triple deck	ES... end section
ZK...	All functions	EK... end section

Ensure a good straight cut by positioning the cutting tool on the vertical snicks of the insulated part of the jumper.

3 - Cut poles

4 - Alternated poles

5 - Alternated poles with cut extremities

When using cut jumpers, cut extremities should be placed oppositely to allow end sections / circuit separators placement at each cut extremities.

For all other applications, please consult us.

1SNK160031S0201

Technical data valid for copper conductors only.

JB12 screwless jumper bars
Common terminal block accessories

JB12

12 mm 0.472 in spacing

Description

Facilitate & secure your jumper bar assembly process:
- Screwless mounting,
- Pre-cut poles for alternated jumpering between terminal blocks,
- Insulated,
- Positive locking,
- Perfectly adapted to low level electrical contact (20mA, 50mV).

Ordering details

Description		Color	Type	Part Number	Pkg qty	Weight (1 pce) g
12 mm 0.472 in spacing	2 poles	Orange	JB12-2	1SNK912302R0000	50	4.90
	3 poles		JB12-3	1SNK912303R0000	50	7.60
	5 poles		JB12-5	1SNK912305R0000	20	12.90

Main technical data

Material specifications	Insulating material	Polyamide	
	Flammability	V0	
	NF F 16 101	I2F2	
Ambient temperature min/max	Service IEC 60068-2-1	-55 ... +110 °C	-67 ... +230 °F
	Storage	-55 ... +110 °C	-67 ... +230 °F
	Installing	-5 ... +40 °C	+23 ... +104 °F

		IEC	UL - CSA	Ex e
Rated current		76 A	67 A	
Rated voltage	1 - Standard use	1000 V	600 V	693 V
	2 - Cut extremities	800 V	300 V	440 V
	3 - Cut poles	630 V	300 V	440 V
	4 - Alternated poles	320 V	150 V	220 V
	5 - Alternated poles with cut extremities	250 V	150 V	176 V
Impulse withstand voltage		6000 V		
Protection		IP20	NEMA 1	

All the main technical data are indicative "manufacturer" values.

RoHS
RoHS

Mounting instructions

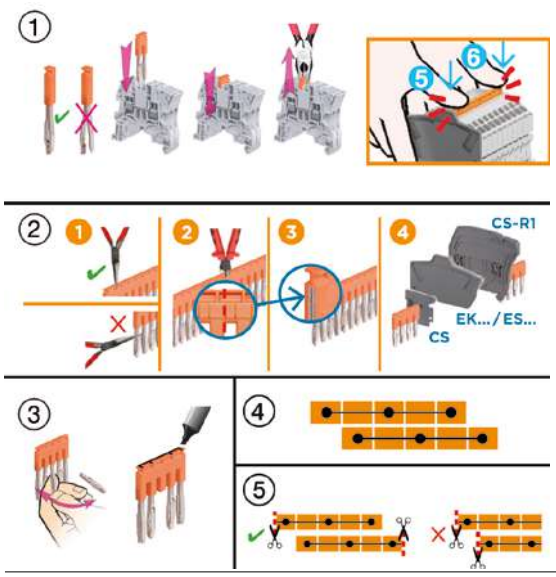

1 - Standard use

2 - Cut extremities

For voltage rating > 50 V and Uimp > 2.5 KV, the below accessories must be installed on the cut side of the jumper to guarantee IP20 and voltage rating:

ZS...	Feed-through	CS circuit separator
	Double deck / triple deck	ES... end section
ZK...	All functions	EK... end section

Ensure a good straight cut by positioning the cutting tool on the vertical snicks of the insulated part of the jumper.

3 - Cut poles

4 - Alternated poles

5 - Alternated poles with cut extremities

When using cut jumpers, cut extremities should be placed oppositely to allow end sections / circuit separators placement at each cut extremities.

For all other applications, please consult us.

1SNK160071S0201

Technical data valid for copper conductors only.

JB85-3 cross spacing jumpers
Common terminal block accessories

JB85

8 mm 0.315 in spacing

Description

- Allows power distribution between terminal blocks with different spacing,
- JB5-3, JB6-3 and JB8-3 can be used as cross spacing jumpers (see selection table on mounting instructions below).

Ordering details

Description		Color	Type	Part Number		Pkg qty	Weight (1 pce) g
Cross spacing jumpers	3 poles	Orange	JB85-3	1SNK900603R0000		10	2.80

Main technical data

Material specifications	Insulating material	Polyamide	
	Flammability	V0	
	NF F 16 101	I2F3	
Ambient temperature min/max	Service IEC 60068-2-1	-55 ... +110 °C	-67 ... +230 °F
	Storage	-55 ... +110 °C	-67 ... +230 °F
	Installing	-5 ... +40 °C	+23 ... +104 °F

		IEC	UL - CSA	Ex e
Rated current		32 A	30 A	
Rated voltage	Standard use	1000 V	600 V	Please consult
	Cut extremities	800 V	300 V	our dedicated
	Cut poles	630 V	300 V	certificates
Impulse withstand voltage		8000 V		
Protection		IP20	NEMA 1	

All the main technical data provided are "manufacturer" values

RoHS
RoHS

Mounting instructions

Cross spacing jumper selection between A and B terminal blocks with different spacing.

A \ B	5.2 mm	6 mm	8 mm
6 mm	JB5.3	-	-
8 mm	JB85.3	JB85.3	-
10 mm	JB85.3	JB85.3	JB8.3
12 mm	JB85.3	JB6.3	-

Yellow cell: for ZS and ZK terminal blocks

Blue cell: for ZS terminal blocks only

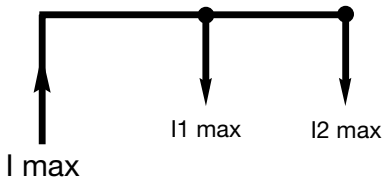

I1 max + I2 max ≤ I max

I max
I1 max ≤ I rated terminal block
I2 max

1SNK160054S0201

Technical data valid for copper conductors only.

TP

7.6 mm 0.299 in spacing

Mounting instructions

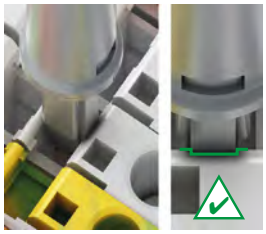

TP2 test adapters

Description

- Insulated test adapter that enables individual voltage control,
- Direct plug-in solution into the jumpers channels,
- Compatible with standard isolated or non isolated test plugs DIA 2 mm 0.079 in and 2.3 mm 0.090 in,
- Withstand more than 10000 operations according to TE Connectivity test standards.

Ordering details

Description	Color	Type	Part Number	Pkg qty	Weight (1 pce) g
For test plugs DIA 2 mm 0.079 in	Dark grey	TP2	1SNK900203R0000	20	1.70

Main technical data

Material specifications	Insulating material	Polyamide		
	Flammability	V0		
	NF F 16 101	I2F2		
Ambient temperature min/max	Service IEC 60068-2-1	-55 ... +110 °C	-67 ... +230 °F	
	Storage	-55 ... +110 °C	-67 ... +230 °F	
	Installing	-5 ... +40 °C	+23 ... +104 °F	
		IEC	**UL - CSA**	**Ex e**
Rated current		10 A		
Rated voltage	Standard use	1000 V	600 V	Not authorized
Impulse withstand voltage		8000 V		
Protection		IP20	NEMA 1	

All the main technical data provided are "manufacturer" values

RoHS
RoHS

TP

7.6 mm 0.299 in spacing

Mounting instructions

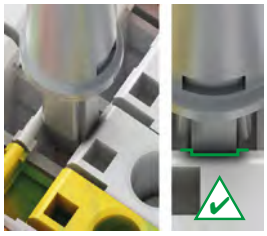

TP4 test adapters

Description

- Isolated test adapter that enables individual voltage control,
- Direct plug-in solution into the jumpers channels,
- Compatible with standard insulated or non isolated test plugs DIA 4 mm 0.157 in,
- Withstand more than 10000 operations according to TE Connectivity test standards.

Ordering details

Description	Color	Type	Part Number	Pkg qty	Weight (1 pce) g
For test plugs DIA 4 mm 0.157 in	Dark grey	TP4	1SNK900205R0000	20	2.40

Main technical data

Material specifications	Insulating material	Polyamide		
	Flammability	V0		
	NF F 16 101	I2F2		
Ambient temperature min/max	Service IEC 60068-2-1	-55 ... +110 °C	-67 ... +230 °F	
	Storage	-55 ... +110 °C	-67 ... +230 °F	
	Installing	-5 ... +40 °C	+23 ... +104 °F	
		IEC	**UL - CSA**	**Ex e**
Rated current		16 A		
Rated voltage	Standard use	1000 V	600 V	Not authorized
Impulse withstand voltage		8000 V		
Protection		IP20	NEMA 1	

All the main technical data provided are "manufacturer" values

RoHS
RoHS

1SNK160036S0201

Technical data valid for copper conductors only.

TC5 test connectors
Common terminal block accessories

5.2 mm 0.205 in spacing

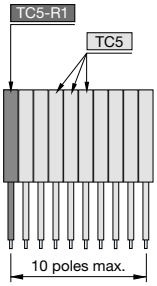

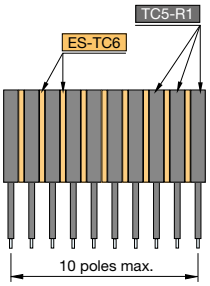

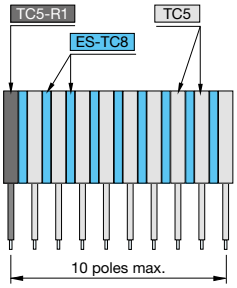

PT-3

Description

Ease the testing of terminal block assemblies:

- Make your own test connector assembly with our modular solution mixing various spacings,
- Direct plug-in solution into the jumpers channels,
- Withstand more than 10000 operations according to TE Connectivity test standards.

Main technical data

Connecting capacity		IEC	UL - CSA
1 conductor per clamp	Rigid: Solid/Stranded	0.2 ... 1.5 mm²	
	Flexible without ferrule	0.22 ... 1.5 mm²	
	Flexible with non insulated ferrule		
	Flexible with insulated ferrule	0.22 ... 1.5 mm²	
	Gauge	A1-B1	
2 conductors per clamp	Rigid: Solid/Stranded	0.2 ... 0.75 mm²	
	Flexible without ferrule	0.22 ... 0.75 mm²	
	Flexible with twin ferrule	0.22 ... 0.75 mm²	
Rated current / Rated cross section		16 A / 1.5 mm²	
Rated short-time withstand current (1s)		180 A	
Rated voltage		1000 V	
Impulse withstand voltage		8000 V	
Protection		IP20	NEMA 1

Mounting instructions

Rail		
Wire stripping length		8 mm 0.314 in
Tool		Flat screwdriver Ø 2.5 mm Ø 0.098 in
Torque		0.5 Nm ± 0.1 3.43 lb.in ± 0.885

The connecting capacity data for one Rigid: Solid/Stranded, or one Flexible conductor (when applicable) is a mandatory information required by IEC, UL and CSA standards (Copper conductors). All other data are provided as supplementary information only. For more details, please consult our CB, UL or CSA certificates and technical datasheet available on http://www.TE.com

Material specifications	Insulating material	Polyamide	
	Flammability	V0	
	NF F 16 101	I2F2	
Ambient temperature min/max	Service IEC 60068-2-1	-55 ... +110 °C	-67 ... +230 °F
	Storage	-55 ... +110 °C	-67 ... +230 °F
	Installing	-5 ... +40 °C	+23 ... +104 °F

All the main technical data provided are "manufacturer" values

RoHS
RoHS

Ordering details

Test connectors for 5.2 mm 0.205 in spacing terminal blocks

Description		Color	Type	Part Number		Pkg qty	Weight (1 pce) g
Test connectors	5.2 mm 0.205 in spacing	Dark grey	TC5	1SNK900200R0000		10	5.20
	End module, 5.2 mm 0.205 in		TC5-R1	1SNK900201R0000		10	5.20

Ordering details

Test connectors for 6 mm 0.236 in spacing terminal blocks

Description		Color	Type	Part Number		Pkg qty	Weight (1 pce) g
Test connectors	End module, 5.2 mm 0.205 in	Dark grey	TC5-R1	1SNK900201R0000		10	5.20
Spacers	0.8 mm 0.031 in spacing		ES-TC6	1SNK900105R0000		10	0.80

Ordering details

Test connectors for 8 mm 0.315 in spacing terminal blocks

Description		Color	Type	Part Number		Pkg qty	Weight (1 pce) g
Test connectors	5.2 mm 0.205 in spacing	Dark grey	TC5	1SNK900200R0000		10	5.20
	End module, 5.2 mm 0.205 in		TC5-R1	1SNK900201R0000		10	5.20
Spacers	2.8 mm 0.110 in spacing		ES-TC8	1SNK900104R0000		10	1.40

Accessories

Description		Color	Type	Part Number		Pkg qty	Weight (1 pce) g
Cable clamps	Fit on two C2.5-ZDP plugs and on TC5 test connectors	Dark grey	PT-3	1SNK900625R0000		20	1.00
Terminal block markers	Blank marker	White	MG-CPM 13 41790	1SNB041790R0512		1960	0.23
	Blank card		MC512	1SNK140000R0000		22	9.00
			MC512PA	1SNK149999R0000		20	10.00
	Universal wire markers holder	Grey	UMH	1SNK900611R0000		10	0.20

Technical data valid for copper conductors only.

1SNK160042S0201

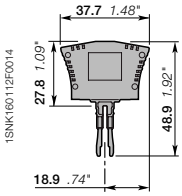

PG5

9.95 mm 0.392 in spacing

Mounting instructions

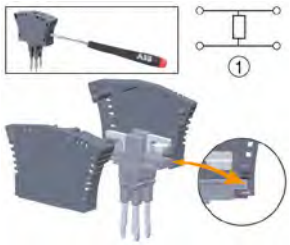

- Open the PG5-R2 with a flat screw-driver DIA . 3.5 mm 0.138 in,
- Use a soldering iron to fix your component,
- Close the PG5-R2,
- Plug-in in the terminal blocks jumper channels.

PG5-R2 component plugs

Description

- Component holder compatible with 5.2 mm 0.205 in spacing ZS4 feed-through terminal blocks,
- Fit components 16 x 16 x 8.5 mm 0.630 x 0.630 x 0.335 in (not supplied with plug) such as resistors, diodes, varistance,
- Direct plug-in into the terminal blocks jumper channels,
- Maximum dissipatived power: 2 W.

Ordering details

Description	Color	Type	Part Number	Pkg qty	Weight (1 pce) g
Components insertion between 2 blocks	Dark grey	PG5-R2	1SNK900403R0000	20	8.00

Main technical data

Material specifications	Insulating material	Polyamide	
	Flammability	V0	
	NF F 16 101	I2F2	
Ambient temperature min/max	Service IEC 60068-2-1	-55 ... +110 °C	-67 ... +230 °F
	Storage	-55 ... +110 °C	-67 ... +230 °F
	Installing	-5 ... +40 °C	+23 ... +104 °F

	IEC	UL - CSA
Rated current		
Rated voltage	250 V	
Impulse withstand voltage	4000 V	
Protection	IP20	NEMA 1

All the main technical data provided are "manufacturer" values

RoHS
RoHS

Accessories

Description		Color	Type	Part Number	Pkg qty	Weight (1 pce) g
Terminal block markers		White	MG-CPM 13 41790	1SNB041790R0512	1960	0.23
Blank card	In polycarbonate		MC512	1SNK140000R0000	22	9.00
	Blank card		MC512PA	1SNK149999R0000	20	10.00
Universal wire markers holder	5.2 mm 0.205 in spacing	Grey	UMH	1SNK900611R0000	10	0.20

Technical data valid for copper conductors only.

1SNK160039S0201

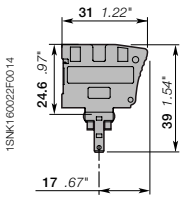

PG5

5.2 mm 0.205 in spacing

Mounting instructions

– Direct plug-in in disconnect with plug terminal block

PG5 component plugs

Description

– Ease the components installation (components not supplied with plug) with our quick plug-in mounting system which avoids soldering process,
– Accept 8.8 x 3.2 mm 0.346 x 0.125 in components such as resistors, diodes or subminiature fuses (fully encapsulated),
– Maximum dissipated power: 1 W.

Ordering details

Description	Color	Type	Part Number	Pkg qty	Weight (1 pce) g
Components in series with circuit	Dark grey	PG5	1SNK900401R0000	20	3.50

Main technical data

Material specifications	Insulating material	Polyamide	
	Flammability	V0	
	NF F 16 101	I2F2	
Ambient temperature min/max	Service IEC 60068-2-1	-55 ... +110 °C	-67 ... +230 °F
	Storage	-55 ... +110 °C	-67 ... +230 °F
	Installing	-5 ... +40 °C	+23 ... +104 °F

	IEC	UL - CSA
Rated current		
Rated voltage	400 V	150 V
Impulse withstand voltage	6000 V	
Protection	IP20	NEMA 1

All the main technical data provided are "manufacturer" values

RoHS
RoHS

Accessories

Description		Color	Type	Part Number	Pkg qty	Weight (1 pce) g
Terminal block markers		White	MG-CPM 13 41790	1SNB041790R0512	1960	0.23
Blank card	In polycarbonate		MC512	1SNK140000R0000	22	9.00
	Blank card		MC512PA	1SNK149999R0000	20	10.00
Universal wire markers holder	5.2 mm 0.205 in spacing	Grey	UMH	1SNK900611R0000	10	0.20

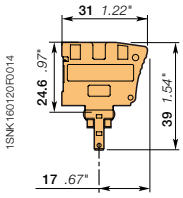

PG5

5.2 mm 0.205 in spacing

Mounting instructions

– PG5-R1 totally inserted: closed circuit,
– PG5-R1 inserted in central position: open circuit, plug secured in isolated central position

PG5-R1 disconnect plugs

Description

Allow disconnect function when associated with the disconnect with plug terminal blocks.

Ordering details

Description	Color	Type	Part Number	Pkg qty	Weight (1 pce) g
Equipped with linking bar	Orange	PG5-R1	1SNK900402R0000	20	3.50

Main technical data

Material specifications	Insulating material	Polyamide	
	Flammability	V0	
	NF F 16 101	I2F3	
Ambient temperature min/max	Service IEC 60068-2-1	-55 ... +110 °C	-67 ... +230 °F
	Storage	-55 ... +110 °C	-67 ... +230 °F
	Installing	-5 ... +40 °C	+23 ... +104 °F

	IEC	UL - CSA
Rated current	18 A	20 A
Rated voltage	400 V	150 V
Impulse withstand voltage	6000 V	
Protection	IP20	NEMA 1

All the main technical data provided are "manufacturer" values

RoHS
RoHS

Accessories

Description		Color	Type	Part Number	Pkg qty	Weight (1 pce) g
Terminal block markers		White	MG-CPM 13 41790	1SNB041790R0512	1960	0.23
Blank card	In polycarbonate		MC512	1SNK140000R0000	22	9.00
	Blank card		MC512PA	1SNK149999R0000	20	10.00
Universal wire markers holder	5.2 mm 0.205 in spacing	Grey	UMH	1SNK900611R0000	10	0.20

Technical data valid for copper conductors only.

1SNK160037S0201

1SNK160242F0014

TO

TO screwdrivers

Description

Flat head screwdriver

Ordering details

Description	Color	Type	Part Number		Pkg qty	Weight (1 pce) g
Insulated screwdriver 1000V IEC dimensions 3.5 x 100 mm 0.138 x 3.94 in		TO3.5-100-INS	1SNK900644R0000		1	37.00
screwdriver 3.5 x 50 mm 0.138 x 1.97 in		TO3.5-50	1SNK900640R0000		12	22.00
screwdriver 3.5 x 50 mm 0.138 x 1.97 in Angled 60°		TO3.5-50-A	1SNK900659R0000		12	21.6
screwdriver 4 x 100 mm 0.157 x 3.94 in		TO4-100	1SNK900641R0000		1	42.00
screwdriver 5.5 x 125 mm 0.216 x 4.92 in		TO5.5-125	1SNK900642R0000		1	75.50
screwdriver 6.5 x 150 mm 0.256 x 5.90 in		TO6.5-150	1SNK900643R0000		1	121.00

1SNK160127F0014

PS

PS crimping tools

Description

- Crimp flexible conductors equipped with ferrules from 0.08 to 10 mm² 28 AWG to 7 AWG,
- Semi-automatic crimping tool.

Ordering details

Description	Color	Type	Part Number		Pkg qty	Weight (1 pce) g
180 mm 7.09 in length		PS-3	1SNK900650R0000		1	380.00

1SNK160028S0201

Technical data valid for copper conductors only.

1SNK160233V0014

EK2.5

EK2.5 end sections

Description

- Unique dark grey color that fits all terminal blocks colours and ease the identification of circuits within your terminal block assemblies,
- Compatible with ZK2.5, ZK2.5-PE, ZK4, ZK4-PE, ZK6 and ZK6-PE PI-Spring screwless terminal blocks.

Ordering details

Description	Color	Type	Part Number		Pkg qty	Weight (1 pce) g
2 mm 0.079 in spacing	Dark grey	EK2.5	1SNK705910R0000		20	1.80

1SNK160234V0014

EK2.5-3P

EK2.5-3P end sections

Description

- Unique dark grey color that fits all terminal blocks colours and ease the identification of circuits within your terminal block assemblies,
- Compatible with ZK2.5-3P, ZK2.5-PE-3P, ZK4-3P, ZK4-PE-3P, ZK2.5-S..., ZK2.5-SP and ZK2.5-SF... PI-Spring screwless terminal blocks.

Ordering details

Description	Color	Type	Part Number		Pkg qty	Weight (1 pce) g
2 mm 0.079 in spacing	Dark grey	EK2.5-3P	1SNK705911R0000		20	2.40

1SNK160235V0014

EK2.5-4P

EK2.5-4P end sections

Description

- Unique dark grey color that fits all terminal blocks colours and ease the identification of circuits within your terminal block assemblies,
- Compatible with ZK2.5-4P, ZK2.5-PE-4P, ZK4-4P and ZK4-PE-4P PI-Spring screwless terminal blocks.

Ordering details

Description	Color	Type	Part Number		Pkg qty	Weight (1 pce) g
2 mm 0.079 in spacing	Dark grey	EK2.5-4P	1SNK705912R0000		20	2.70

Main technical data

Material specifications	Insulating material	Polyamide	
	Flammability	V0	
	NF F 16 101	I2F2	
Ambient temperature min/max	Service IEC 60068-2-1	-55 ... +110 °C	-67 ... +230 °F
	Storage	-55 ... +110 °C	-67 ... +230 °F
	Installing	-5 ... +40 °C	+23 ... +104 °F

All the main technical data provided are "manufacturer" values.

RoHS
RoHS

1SNK160064S0201

Technical data valid for copper conductors only.

1SNK160339V0014

EK2.5-S-4P

EK2.5-S-4P end sections

Description

- Unique dark grey color that fits all terminal blocks colours and ease the identification of circuits within your terminal block assemblies,
- Compatible with ZK2.5-S-4P, ZK2.5-SP-4P, ZK2.5-CH-4P... PI-Spring screwless terminal blocks.

Ordering details

Description	Color	Type	Part Number		Pkg qty	Weight (1 pce) g
2 mm 0.079 in spacing	Dark grey	EK2.5-S-4P	1SNK705913R0000		20	2.94

1SNK160237V0014

EK2.5-D2

EK2.5-D2 end sections

Description

- Compatible with ZK2.5-D2, ZK2.5-D2-PE, ZK2.5-D1 and ZK2.5-D1-PE PI-Spring screwless terminal blocks.

Ordering details

Description	Color	Type	Part Number		Pkg qty	Weight (1 pce) g
2 mm 0.079 in spacing	Dark grey	EK2.5-D2	1SNK705960R0000		20	3.40

1SNK160346V0014

EK2.5-T3

EK2.5-T3 end sections

Description

- Compatible with ZK2.5-T3, ZK2.5-T1, ZK2.5-T1-PE, ZK2.5-L-L-PE and ZK2.5-L-N-PE PI-Spring screwless terminal blocks.

Ordering details

Description	Color	Type	Part Number		Pkg qty	Weight (1 pce) g
0.8 mm 0.031 in spacing	Dark grey	EK2.5-T3	1SNK705961R0000		20	4.76

Main technical data

Material specifications	Insulating material	Polyamide	
	Flammability	V0	
	NF F 16 101	I2F2	
Ambient temperature min/max	Service IEC 60068-2-1	-55 ... +110 °C	-67 ... +230 °F
	Storage	-55 ... +110 °C	-67 ... +230 °F
	Installing	-5 ... +40 °C	+23 ... +104 °F

All the main technical data provided are "manufacturer" values.

RoHS
RoHS

Technical data valid for copper conductors only.

1SNK160065S0201

5

1SNK160236V0014

EK6-3P

EK6-3P end sections

Description

– Compatible with ZK6-3P and ZK6-PE-3P PI-Spring screwless terminal blocks.

Ordering details

Description	Color	Type	Part Number		Pkg qty	Weight (1 pce) g
2 mm 0.079 in spacing	Dark grey	EK6-3P	1SNK708911R0000		20	2.80

1SNK160238V0014

EK10

EK10 end sections

Description

– Compatible with ZK10, ZK10-PE, ZK16 and ZK16-PE PI-Spring screwless terminal blocks.

Ordering details

Description	Color	Type	Part Number		Pkg qty	Weight (1 pce) g
2 mm 0.079 in spacing	Dark grey	EK10	1SNK710910R0000		20	3.30

1SNK160318V0014

EK10-3P

EK10-3P end sections

Description

– Unique dark grey color that fits all terminal blocks colours and ease the identification of circuits within your terminal block assemblies,
– Compatible with ZK10-3P, ZK10-PE-3P, ZK16-3P, ZK16-PE-3P... PI-Spring screwless terminal blocks.

Ordering details

Description	Color	Type	Part Number		Pkg qty	Weight (1 pce) g
2 mm 0.079 in spacing	Dark grey	EK10-3P	1SNK710911R0000		20	4.5

Main technical data

Material specifications	Insulating material	Polyamide	
	Flammability	V0	
	NF F 16 101	I2F2	
Ambient temperature min/max	Service IEC 60068-2-1	-55 ... +110 °C	-67 ... +230 °F
	Storage	-55 ... +110 °C	-67 ... +230 °F
	Installing	-5 ... +40 °C	+23 ... +104 °F

All the main technical data provided are "manufacturer" values.

RoHS
RoHS

Technical data valid for copper conductors only.

1SNK160095S0201

CS-R2

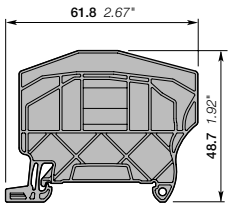

3 mm 0.118 in spacing

CS-R2 circuit separators

Description

- Compact circuits separator solution (only 3mm spacing) which provides a convenient visual identification of the several circuits within terminal assemblies,
- Unique top marking possibility that can replace the conventional solution of "end stop with label holder" for demanding applications with high space constraints, - Compatible with all PI-spring feed-through and ground terminal blocks up to 8 mm spacing,
- Mounting on DIN3-TH35 rail.

Ordering details

Description	Color	Type	Part Number	Pkg qty	Weight (1 pce) g
3 mm 0.118 in spacing	Dark grey	CS-R2	1SNK900106R0000	20	3.80

Main technical data

Material specifications	Insulating material	Polyamide	
	Flammability	V0	
	NF F 16 101	I2F2	
Ambient temperature min/max	Service IEC 60068-2-1	-55 ... +110 °C	-67 ... +230 °F
	Storage	-55 ... +110 °C	-67 ... +230 °F
	Installing	-5 ... +40 °C	+23 ... +104 °F

All the main technical data provided are "manufacturer" values

RoHS
RoHS

Accessories

Description		Color	Type	Part Number	Pkg qty	Weight (1 pce) g
Terminal block markers		White	MG-CPM 13 41791	1SNB041791R0612	1680	0.27
Labels		Yellow	MG-VYT 46415	1SNB046415R0615	5250	0.04
		White	MG-VYT 46915	1SNB046915R0615	5250	0.05
Blank card	In polycarbonate	White	MC612	1SNK150000R0000	22	10.00
	Blank card		MC612PA	1SNK159999R0000	20	11.00
Universal wire markers holder	5.2 mm 0.205 in spacing	Grey	UMH	1SNK900611R0000	10	0.20

5

1SNK160072S0201

Technical data valid for copper conductors only.

CS-R3

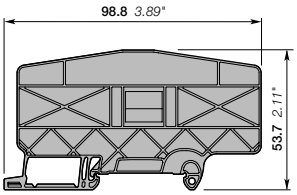

3 mm 0.118 in spacing

CS-R3 circuit separators

Description

- Compact circuits separator solution (only 3mm spacing) which provides a convenient visual identification of the several circuits within terminal assemblies,
- Unique top marking possibility that can replace the conventional solution of "end stop with label holder" for demanding applications with high space constraints,
- Compatible with all single deck PI-spring terminal blocks and ZS10-ST...terminal blocks ,
- Mounting on DIN3-TH35 rail.

Ordering details

Description	Color	Type	Part Number	Pkg qty	Weight (1 pce) g
3 mm 0.118 in spacing	Dark grey	CS-R3	1SNK900107R0000	20	6.40

Main technical data

Material specifications	Insulating material	Polyamide	
	Flammability	V0	
	NF F 16 101	I2F2	
Ambient temperature min/max	Service IEC 60068-2-1	-55 ... +110 °C	-67 ... +230 °F
	Storage	-55 ... +110 °C	-67 ... +230 °F
	Installing	-5 ... +40 °C	+23 ... +104 °F

All the main technical data provided are "manufacturer" values

RoHS
RoHS

Accessories

Description		Color	Type	Part Number	Pkg qty	Weight (1 pce) g
Terminal block markers		White	MG-CPM 13 41790	1SNB041790R0512	1960	0.23
			MG-CPM 13 41791	1SNB041791R0612	1680	0.27
Labels		Yellow	MG-VYT 46415	1SNB046415R0615	5250	0.04
		White	MG-VYT 46915	1SNB046915R0615	5250	0.05
Blank card	In polycarbonate	White	MC512	1SNK140000R0000	22	9.00
	Blank card		MC512PA	1SNK149999R0000	20	10.00
	In polycarbonate		MC612	1SNK150000R0000	22	10.00
	Blank card		MC612PA	1SNK159999R0000	20	11.00
Universal wire markers holder	5.2 mm 0.205 in spacing	Grey	UMH	1SNK900611R0000	10	0.20

Technical data valid for copper conductors only.

SHBP/SHB

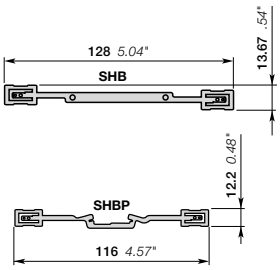

SHBP/SHB shield connectors for PI-Spring terminal blocks

Description

- Ensure the continuity of your shield connection,
- Various connection solutions available: RILS cable ties, soldering, quick-connect.

Ordering details

Description	Color	Type	Part Number		Pkg qty	Weight (1 pce) g
Compatible with ZK2.5 and ZK2.5-S terminal blocks		SHBP	1SNK900601R0000		20	4.10
Compatible with ZS and ZK double deck terminal blocks		SHB	1SNK900602R0000		20	4.90

Main technical data

Material specifications	Insulating material					
	Flammability					
	NF F 16 101					
Ambient temperature min/max	Service IEC 60068-2-1	-55 ... +110 °C	-67 ... +230 °F			
	Storage	-55 ... +110 °C	-67 ... +230 °F			
	Installing	-5 ... +40 °C	+23 ... +104 °F			

SHBP	IEC	UL - CSA	Ex e
Rated voltage	100 V		50 V

All the main technical data provided are "manufacturer" values

RoHS
RoHS

Accessories for screw clamp and PI-Spring terminal blocks

Description		Color	Type	Part Number		Pkg qty	Weight (1 pce) g
Cable ties	For SNK shield connector		RILS	1SNK900627R0000		10	0.30

Mounting instructions

- SHBS is directly fixed on the terminal block,
- SHB is fixed on the ES4-D2 end section,
- SHBP is directly fixed on the terminal block,
- Connect the cable shielding on the shielding connector with:
- RILS cable ties,
- quick-connect (the shield connector needs to be prepared),
- soldering iron.

1SNK160044S0201

Technical data valid for copper conductors only.

1SNK161013F0014

ES4

ES4 end sections

Description

- Unique dark grey color that fits all terminal blocks colours and ease the identification of circuits within your terminal block assemblies,
- Compatible with feed-through, ground and disconnect screw clamp terminal blocks.

Ordering details

Description	Color	Type	Part Number		Pkg qty	Weight (1 pce) g
2.2 mm 0.087 in spacing	Dark grey	ES4	1SNK505910R0000		20	2.20

1SNK160229V0014

ES6-3S

ES6-3S end sections

Description

- Compatible with ZS6-3S and ZS6-3S-PE terminal blocks.

Ordering details

Description	Color	Type	Part Number		Pkg qty	Weight (1 pce) g
2.2 mm 0.087 in spacing	Dark grey	ES6-3S	1SNK505912R0000		20	2.50

1SNK160230V0014

ES6-4S

ES6-4S end sections

Description

- Compatible with ZS6-4S, ZS6-4S-PE, ZS6-S-4S-T2 and ZS4-PE-R2 terminal blocks.

Ordering details

Description	Color	Type	Part Number		Pkg qty	Weight (1 pce) g
2.2 mm 0.087 in spacing	Dark grey	ES6-4S	1SNK505911R0000		20	3.10

1SNK161012F0014

ES4-D2

ES4-D2 end sections

Description

- Unique dark grey color that fits all terminal blocks colours and ease the identification of circuits within your terminal block assemblies,
- Compatible with double deck screw clamp terminal blocks

Ordering details

Description	Color	Type	Part Number		Pkg qty	Weight (1 pce) g
2.55 mm 0.100 in spacing	Dark grey	ES4-D2	1SNK505960R0000		20	4.10

Main technical data

Material specifications	Insulating material	Polyamide	
	Flammability	V0	
	NF F 16 101	I2F2	
Ambient temperature min/max	Service IEC 60068-2-1	-55 ... +110 °C	-67 ... +230 °F
	Storage	-55 ... +110 °C	-67 ... +230 °F
	Installing	-5 ... +40 °C	+23 ... +104 °F

All the main technical data provided are "manufacturer" values.

RoHS
RoHS

Technical data valid for copper conductors only.

1SNK160061S0201

ES4-T3

ES4-T3 end sections

Description

– Compatible with ZS4-T3 terminal block.

Ordering details

Description	Color	Type	Part Number		Pkg qty	Weight (1 pce) g
0.8 mm 0.031 in spacing	Dark grey	ES4-T3	1SNK505961R0000		20	4.20

ES4-SF

ES4-SF end sections

Description

– Compatible with fuse ZS4-SF1... and disconnect screw clamp terminal blocks ZS4-S-R3.

Ordering details

Description	Color	Type	Part Number		Pkg qty	Weight (1 pce) g
1.5 mm 0.059 in spacing	Dark grey	ES4-SF	1SNK508960R0000		20	1.80

ES4-D2-SF1

ES4-D2-SF1 end sections

Description

– Compatible with ZS4-D2-SF1 ... terminal blocks.

Ordering details

Description	Color	Type	Part Number		Pkg qty	Weight (1 pce) g
2.5 mm 0.098 in spacing	Dark grey	ES4-D2-SF1	1SNK508911R0000		20	5.00

ES10-ST

ES10-ST end sections

Description

– Unique dark grey color that fits all test disconnect terminal blocks ZS10-ST... and ease the identification of circuits within your terminal block assemblies,
– Also compatible with ZS10-R1 and ZS10-PE-R1.

Ordering details

Description	Color	Type	Part Number		Pkg qty	Weight (1 pce) g
2 mm 0.079 in spacing	Dark grey	ES10-ST	1SNK508910R0000		20	3.5

Accessories

Description		Color	Type	Part Number		Pkg qty	Weight (1 pce) g
Circuit separators	0 mm 0 in spacing	Dark grey	CS	1SNK900101R0000		20	0.20

Main technical data

Material specifications	Insulating material	Polyamide	
	Flammability	V0	
	NF F 16 101	I2F2	
Ambient temperature min/max	Service IEC 60068-2-1	-55 ... +110 °C	-67 ... +230 °F
	Storage	-55 ... +110 °C	-67 ... +230 °F
	Installing	-5 ... +40 °C	+23 ... +104 °F

All the main technical data provided are "manufacturer" values.

RoHS
RoHS

Technical data valid for copper conductors only.

1SNK160062S0201

5

JB8

8 mm 0.315 in spacing

Mounting instructions

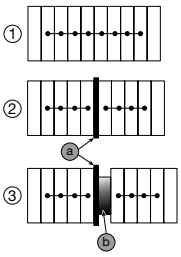

1 - Rated voltage: 160 V (IEC) / Not authorized (UL)
2 - Rated voltage: 320 V (IEC) / Not authorized (UL)
3 - Rated voltage: 1000 V (IEC) / 300 V (UL)
a - End section ES10-ST
b - End stop BAZ1

JB8 jumper bars

Description

Insulated jumper bar with screw mounting.

Ordering details

Description		Color	Type	Part Number		Pkg qty	Weight (1 pce) g
8 mm 0.315 in spacing	2 poles	Orange	JB8-2-R1	1SNK908902R0000		10	7.6
	3 poles		JB8-3-R1	1SNK908903R0000		10	11.6
	4 poles		JB8-4-R1	1SNK908904R0000		10	15.5
	5 poles		JB8-5-R1	1SNK908905R0000		10	19.4
	10 poles		JB8-10-R1	1SNK908910R0000		10	39.00

Main technical data

Material specifications	Insulating material	Polyamide		Rail		
	Flammability	V0				
	NF F 16 101	I2F3		Tool		Flat screwdriver Ø 3.5 mm Ø 0.138 in
Ambient temperature min/max	Service IEC 60068-2-1	-55 ... +110 °C	-67 ... +230 °F			
	Storage	-55 ... +110 °C	-67 ... +230 °F			
	Installing	-5 ... +40 °C	+23 ... +104 °F	Torque		0.7 Nm ± 0.1 6.2 lb.in ± 0.88

		IEC	UL - CSA	Ex e
Rated current		50 A	51 A	
Rated voltage	Standard use	160 V		
	Alternated poles			Not authorized
Impulse withstand voltage				
Protection		IP20	NEMA 1	

All the main technical data provided are "manufacturer" values

RoHS
RoHS

Technical data valid for copper conductors only.

1SNK161061S0201

JB16

16 mm 0.630 in spacing

Mounting instructions

- With flat pliers, cut out the partitions on the terminal block insulating body. Be careful to not cut out the jumpered terminal blocks partitions at both ends of the assembly in order to maintain the IP20, Nema1 protection and insulation,
- Install the jumper bar with the recommended tool and torque.

JB16 jumper bars

Description

Insulated jumper bar with screw mounting.

Ordering details

Description		Color	Type	Part Number		Pkg qty	Weight (1 pce) g
16 mm 0.630 in spacing	2 poles	Orange	JB16-2	1SNK916302R0000		10	10.00
	3 poles		JB16-3	1SNK916303R0000		10	16.00
	4 poles		JB16-4	1SNK916304R0000		10	22.00
	5 poles		JB16-5	1SNK916305R0000		10	28.00
	10 poles		JB16-10	1SNK916310R0000		10	56.60

Main technical data

Material specifications	Insulating material	Polyamide		Rail		
	Flammability	V0				
	NF F 16 101	I2F3		Tool		Flat screwdriver Ø 5.5 mm Ø 0.217 in
Ambient temperature min/max	Service IEC 60068-2-1	-55 ... +110 °C	-67 ... +230 °F			
	Storage	-55 ... +110 °C	-67 ... +230 °F			
	Installing	-5 ... +40 °C	+23 ... +104 °F	Torque		1.2 Nm ± 0.1 10.6 lb.in ± 0.885

		IEC	UL - CSA	Ex e
Rated current		125 A	150 A	
Rated voltage	Standard use	1000 V	600 V	
	Alternated poles			Not authorized
Impulse withstand voltage		8000 V		
Protection		IP20	NEMA 1	

All the main technical data provided are "manufacturer" values

RoHS
RoHS

JB22

22 mm 0.866 in spacing

Mounting instructions

- With flat pliers, cut out the partitions on the terminal block insulating body. Be careful to not cut out the jumpered terminal blocks partitions at both ends of the assembly in order to maintain the IP20, Nema1 protection and insulation,
- Install the jumper bar with the recommended tool and torque.

JB22 jumper bars

Description

Screw jumper bars

Ordering details

Description		Color	Type	Part Number		Pkg qty	Weight (1 pce) g
22 mm 0.866 in spacing	2 poles		JB22-2	1SNK922302R0000		5	27.00
	3 poles		JB22-3	1SNK922303R0000		5	43.30
	5 poles		JB22-5	1SNK922305R0000		5	76.10
	10 poles		JB22-10	1SNK922310R0000		5	157.40

Main technical data

Material specifications	Insulating material	Polyamide		Rail		
	Flammability					
	NF F 16 101			Tool		Allen key Ø 4 mm Ø 0.157 in
Ambient temperature min/max	Service IEC 60068-2-1	-55 ... +110 °C	-67 ... +230 °F			
	Storage	-55 ... +110 °C	-67 ... +230 °F			
	Installing	-5 ... +40 °C	+23 ... +104 °F	Torque		2 Nm ± 0.4 17.7 lb.in ± 3.54

		IEC	UL - CSA	Ex e
Rated current		192 A	175 A	
Rated voltage	Standard use	1000 V	600 V	630 V
	Alternated poles			Not authorized
Impulse withstand voltage		8000 V		
Protection		IP20		

All the main technical data provided are "manufacturer" values

RoHS
RoHS

Technical data valid for copper conductors only.

1SNK160032S0201

1SNK160100F0014

JB26

26 mm 1.024 in spacing

Mounting instructions

- With flat pliers, cut out the partitions on the terminal block insulating body. Be careful to not cut out the jumpered terminal blocks partitions at both ends of the assembly in order to maintain the IP20, Nema1 protection and insulation,
- Install the jumper bar with the recommended tool and torque.

JB26 jumper bars

Description

Screw jumper bars

Ordering details

Description		Color	Type	Part Number		Pkg qty	Weight (1 pce) g
26 mm 1.02 in spacing	2 poles		JB26-2	1SNK926302R0000		5	41.20
	3 poles		JB26-3	1SNK926303R0000		5	65.70
	5 poles		JB26-5	1SNK926305R0000		5	115.70
	10 poles		JB26-10	1SNK926310R0000		5	241.50

Main technical data

Material specifications	Insulating material			Rail		
	Flammability					
	NF F 16 101			Tool		Allen key Ø 4 mm Ø 0.157 in
Ambient temperature min/max	Service IEC 60068-2-1	-55 ... +110 °C	-67 ... +230 °F			
	Storage	-55 ... +110 °C	-67 ... +230 °F			
	Installing	-5 ... +40 °C	+23 ... +104 °F	Torque		2 Nm ± 0.4 17.7 lb.in ± 3.54

		IEC	UL - CSA	Ex e
Rated current		232 A	230 A	
Rated voltage	Standard use	1000 V	600 V	630 V
	Alternated poles			Not authorized
Impulse withstand voltage		8000 V		
Protection		IP20		

All the main technical data provided are "manufacturer" values

RoHS
RoHS

Technical data valid for copper conductors only.

1SNK160034S0201

1SNK160100F0014

BJMI31

31 mm 1.22 in spacing

Mounting instructions

- With flat pliers, cut out the partitions on the terminal block insulating body. Be careful to not cut out the jumpered terminal blocks partitions at both ends of the assembly in order to maintain the IP20, Nema1 protection and insulation,
- Install the jumper bar with the recommended tool and torque.

BJMI31 jumper bars

Description

Screw jumper bars

Ordering details

Description		Color	Type	Part Number		Pkg qty	Weight (1 pce) g
31mm 1.220 in spacing	2 poles		BJMI31.2	1SNA206053R0700		1	120.00
	3 poles		BJMI31.3	1SNA206054R0000		1	190.00

Main technical data

Material specifications	Insulating material			Rail		
	Flammability					
	NF F 16 101			Tool		Allen key Ø 5 mm Ø 0.196 in
Ambient temperature min/max	Service IEC 60068-2-1	-55 ... +110 °C	-67 ... +230 °F			
	Storage	-55 ... +110 °C	-67 ... +230 °F			
	Installing	-5 ... +40 °C	+23 ... +104 °F	Torque		3 Nm ± 0.4 26.55 lb.in ± 3.54

		IEC	UL - CSA	Ex e
Rated current		309 A	445 A	
Rated voltage	Standard use	1000 V	600 V	
	Alternated poles			Not authorized
Impulse withstand voltage		8000 V		
Protection		IP20		

All the main technical data provided are "manufacturer" values

RoHS
RoHS

1SNK160100F0014

BJMI36

36 mm 1.42 in spacing

Mounting instructions

- With flat pliers, cut out the partitions on the terminal block insulating body. Be careful to not cut out the jumpered terminal blocks partitions at both ends of the assembly in order to maintain the IP20, Nema1 protection and insulation,
- Install the jumper bar with the recommended tool and torque.

BJMI36 jumper bars

Description

Screw jumper bars

Ordering details

Description		Color	Type	Part Number		Pkg qty	Weight (1 pce) g
36mm 1.41i7 n spacing	2 poles		BJMI36.2	1SNA206126R2500		1	170.00
	3 poles		BJMI36.3	1SNA206223R0600		1	260.00

Main technical data

Material specifications	Insulating material			Rail		
	Flammability					
	NF F 16 101			Tool		Allen key Ø 5 mm Ø 0.196 in
Ambient temperature min/max	Service IEC 60068-2-1	-55 ... +110 °C	-67 ... +230 °F			
	Storage	-55 ... +110 °C	-67 ... +230 °F			
	Installing	-5 ... +40 °C	+23 ... +104 °F	Torque		3 Nm ± 0.4 26.55 lb.in ± 3.54

		IEC	UL - CSA	Ex e
Rated current		415 A	620 A	
Rated voltage	Standard use	1000 V	600 V	
	Alternated poles			Not authorized
Impulse withstand voltage		8000 V		
Protection		IP20		

All the main technical data provided are "manufacturer" values

RoHS
RoHS

1SNK160097S0201

Technical data valid for copper conductors only.

1SNC160112F0014

PC8

8 mm 0.315 in spacing

Mounting instructions for ZS10-ST...

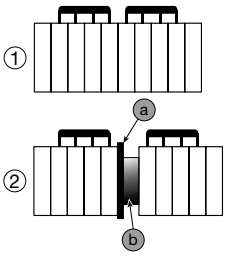

1 - Rated voltage: 630 V (IEC) / 150 V (UL)
2 - Rated voltage: 630 V (IEC) / 300 V (UL)
a - End section ES10-ST
b - End stop BAZ1

PC8 lateral jumper bars

Description

IP20 Comb jumper bars,

- direct insertion in the screw clamp before tightening the screws, above the eventual conductor (if conductor used with ferrule, we recommend the use of long ferrule for optimized mounting ergonomy with test disconnect terminal blocks),
- Multiple versions available in pre-cut poles for test disconnect terminal blocks applications.

Ordering details

Description		Color	Type	Part Number		Pkg qty	Weight (1 pce) g
Lateral jumper bars							
8 mm 0.315 in spacing	2 poles	Black ■	PC8-2	1SNA116538R1700		10	3.00
	3 poles		PC8-3	1SNA116539R1000		10	4.00
	4 poles		PC8-4	1SNA116540R2500		10	6.00
	10 poles		PC8-10	1SNA163313R2400		10	14.00
Lateral jumper bars pre-cut poles							
8 mm 0.315 in spacing	4/6 poles	Black ■	PC8-R1	1SNA400711R0600		10	6.60
	4/8 poles		PC8-R2	1SNA400712R0700		10	7.80
	4/10 poles		PC8-R3	1SNA400713R0000		10	9.00
	3/4 poles		PC8-R4	1SNA400724R0300		10	4.50
	4/7 poles		PC8-R5	1SNA400842R0000		10	6.60
	2/3 poles		PC8-R6	1SNA400843R0000		10	6.60
	4/6 poles		PC8-R7	1SNA400849R0000		10	6.60
	4/8 poles		PC8-R8	1SNA400850R0000		10	7.80

Main technical data

Material specifications	Insulating material	Polyamide	
	Flammability	V0	
	NF F 16 101	I2F3	
Ambient temperature min/max	Service IEC 60068-2-1	-55 ... +110 °C	-67 ... +230 °F
	Storage	-55 ... +110 °C	-67 ... +230 °F
	Installing	-5 ... +40 °C	+23 ... +104 °F

All the main technical data provided are "manufacturer" values

RoHS
RoHS

1SNC160537F0014

PC81

8 mm 0.315 in spacing

PC81 lateral jumper bars

Description

Comb-type jumper bar, allows the connection of consecutive blocks or not by one compression clamp connection.

Ordering details

Description		Color	Type	Part Number		Pkg qty	Weight (1 pce) g
8 mm 0.315 in spacing	10 poles	Grey □	PC81-10	1SNA173523R1100		10	5.00

Main technical data

Material specifications	Insulating material	Brass/polyamide	
	Flammability	V0	
	NF F 16 101	I2F3	
Ambient temperature min/max	Service IEC 60068-2-1	-55 ... +110 °C	-67 ... +230 °F
	Storage	-55 ... +110 °C	-67 ... +230 °F
	Installing	-5 ... +40 °C	-23 ... +104 °F

All the main technical data provided are "manufacturer" values

RoHS
RoHS

1SNK161060S0201

Technical data valid for copper conductors only.

CS

0 mm 0 in spacing

Mounting instructions

CS circuit separators

Description

- The CS circuit separator avoids the derating of terminal blocks when cut jumper bars JB are used,
- Compatible with feed-through terminal blocks up to 16 mm² 4 AWG,
- Without spacing loss.

Ordering details

Description	Color	Type	Part Number	Pkg qty	Weight (1 pce) g
0 mm 0 in spacing	Dark grey	CS	1SNK900101R0000	20	0.20

Main technical data

Material specifications	Insulating material	Polyamide	
	Flammability	V0	
	NF F 16 101	I2F2	
Ambient temperature min/max	Service IEC 60068-2-1	-55 ... +110 °C	-67 ... +230 °F
	Storage	-55 ... +110 °C	-67 ... +230 °F
	Installing	-5 ... +40 °C	+23 ... +104 °F

All the main technical data provided are "manufacturer" values

RoHS
RoHS

CS-R1

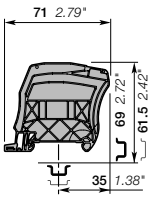

3 mm 0.118 in spacing

Mounting instructions

CS-R1 circuit separators

Description

- Ease the visual identification of the several circuits within your terminal block assemblies,
- Compatible with feed-through terminal blocks up to 35 mm² 0 AWG,
- Intermediate cover holder for CO protective cover,
- Mounting on DIN3-TH35 rail.

Ordering details

Description	Color	Type	Part Number	Pkg qty	Weight (1 pce) g
3 mm 0.118 in spacing	Dark grey	CS-R1	1SNK900103R0000	20	5.20

Main technical data

Material specifications	Insulating material	Polyamide	
	Flammability	V0	
	NF F 16 101	I2F2	
Ambient temperature min/max	Service IEC 60068-2-1	-55 ... +110 °C	-67 ... +230 °F
	Storage	-55 ... +110 °C	-67 ... +230 °F
	Installing	-5 ... +40 °C	+23 ... +104 °F

All the main technical data provided are "manufacturer" values

RoHS
RoHS

Accessories

Description		Color	Type	Part Number	Pkg qty	Weight (1 pce) g
Terminal block markers		White	MG-CPM 13 41790	1SNB041790R0512	1960	0.23
Blank card	In polycarbonate		MC512	1SNK140000R0000	22	9.00
	Blank card		MC512PA	1SNK149999R0000	20	10.00
Universal wire markers holder	5.2 mm 0.205 in spacing	Grey	UMH	1SNK900611R0000	10	0.20

Technical data valid for copper conductors only.

1SNK160018S0201

SHBS/SHB

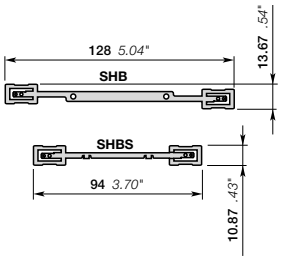

SHBS/SHB shield connectors

Description

- Ensure the continuity of your shield connection,
- Various connection solutions available: RILS cable ties, soldering, quick-connect.

Ordering details

Description		Color	Type	Part Number		Pkg qty	Weight (1 pce) g
Compatible with ZS feed-through terminal blocks			SHBS	1SNK900600R0000		20	3.50
Compatible with ZS and ZK double deck terminal blocks			SHB	1SNK900602R0000		20	4.90

Main technical data

Material specifications	Insulating material					
	Flammability					
	NF F 16 101					
Ambient temperature min/max	Service IEC 60068-2-1	-55 ... +110 °C	-67 ... +230 °F			
	Storage	-55 ... +110 °C	-67 ... +230 °F			
	Installing	-5 ... +40 °C	+23 ... +104 °F			

SHBS	IEC	UL - CSA	Ex e
Rated voltage	320 V		125 V

All the main technical data provided are "manufacturer" values

RoHS
RoHS

Accessories for screw clamp and PI-Spring terminal blocks

Description		Color	Type	Part Number		Pkg qty	Weight (1 pce) g
Cable ties	For SNK shield connector		RILS	1SNK900627R0000		10	0.30

Mounting instructions

- SHBS is directly fixed on the terminal block,
- SHB is fixed on the ES4-D2 end section,
- SHBP is directly fixed on the terminal block,
- Connect the cable shielding on the shielding connector with:
- RILS cable ties,
- quick-connect (the shield connector needs to be prepared),
- soldering iron.

1SNK160079S0201

Technical data valid for copper conductors only.

PL protecting covers
Screw clamp terminal block accessories

PL

Mounting instructions

- The mounting of the PL does not require a screwdriver,
- The dismounting of the PL requires a screwdriver DIA .4 mm 0.160 in, the screwdriver must be positionned in the cover centered hole.

Description

- Prohibit access to the screw clamps,
- Indicate live circuits.

Ordering details

Description	Color	Type	Part Number		Pkg qty	Weight (1 pce) g
5.2 mm 0.205 in spacing	Transparent	PL5	1SNK900618R0000		10	1.50
6 mm 0.236 in spacing		PL6	1SNK900619R0000		10	1.80
8 mm 0.315 in spacing		PL8	1SNK900620R0000		10	2.60
10 mm 0.394 in spacing		PL10	1SNK900621R0000		10	3.10
16 mm 0.630 in spacing		PL16	1SNK900622R0000		10	4.60

Main technical data

Material specifications	Insulating material	Polycarbonate	
	Flammability	V2	
	NF F 16 101		
Ambient temperature min/max	Service IEC 60068-2-1	-55 ... +110 °C	-67 ... +230 °F
	Storage	-55 ... +110 °C	-67 ... +230 °F
	Installing	-5 ... +40 °C	+23 ... +104 °F

Mounting instructions

Tool		Flat screwdriver Ø 4 mm Ø 0.157 in

All the main technical data provided are "manufacturer" values

RoHS
RoHS

Technical data valid for copper conductors only.

1SNK160021S0201

1SNK160110F0014

CO

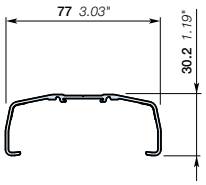

CO protecting covers

Description

- Restrict access to your assembly with the protecting cover CO installed with KCO mounting kit (2 end stops, 2 sealing accessories),
- Compatible with SNK feed-through terminal blocks up to 35 mm² 0 AWG.

Ordering details

Description	Color	Type	Part Number		Pkg qty	Weight (1 pce) g
1 m 39.4 in length	Transparent	CO	1SNK900604R0000		1	300.00

Main technical data

Material specifications	Insulating material	PVC				
	Flammability	V0				
	NF F 16 101					
Ambient temperature min/max	Service IEC 60068-2-1	-55 ... +80 °C	-67 ... +176 °F			
	Storage	-55 ... +80 °C	-67 ... +176 °F			
	Installing	-5 ... +40 °C	+23 ... +104 °F			

All the main technical data provided are "manufacturer" values

RoHS
RoHS

Accessories

Description		Color	Type	Part Number		Pkg qty	Weight (1 pce) g
Protecting cover kits	Mounting kit for cover CO	Dark grey	KCO	1SNK900624R0000		1	47.80
Label		White	PAM43020	1SNA235106R2600		20	27.00

Mounting instructions

Restrict access to the circuit by sealing the cover:
- Drill on the CO center line at 5 mm 0.197 in from the extremity with 5 mm 0.197 in diameter drill,
- Pass the sealing collar through the CO and KCO holes.

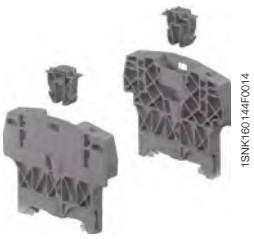

1SNK160144F0014

KCO

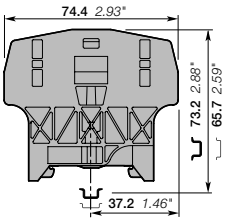

KCO protecting cover kits

Description

Mount your protecting cover with the KCO versatile mounting kit (2 end stops, 2 sealing accessories):
- Maintain the cover,
- Reliably seal the access to the terminal assembly if needed,
- Use it as well as an end stop.

Ordering details

Description	Color	Type	Part Number		Pkg qty	Weight (1 pce) g
Mounting kit for cover CO	Dark grey	KCO	1SNK900624R0000		1	47.80

Main technical data

Material specifications	Insulating material	Polyamide		Rail		G32, TH 35-7.5, TH 35-15, TH 15-5.5
	Flammability	V0				
	NF F 16 101			Tool		Flat screwdriver Ø 4 mm Ø 0.157 in
Ambient temperature min/max	Service IEC 60068-2-1	-55 ... +110 °C	-67 ... +230 °F			
	Storage	-55 ... +110 °C	-67 ... +230 °F			
	Installing	-5 ... +40 °C	+23 ... +104 °F			

All the main technical data provided are "manufacturer" values

RoHS
RoHS

Technical data valid for copper conductors only.

1SNK160045S0201

1SNK160221F0014

SC-JB8

8 mm 0.315 in spacing

SC-JB8 short circuit bridges

Description

- Allow safe short-circuiting of current Tranformers circuits,
- Insulated,
- Fully operated by screwdriver,
- Short circuited fixed position secured thanks to AJS9 tightening,
- Adapted hook shape maintains the bridge on the terminal block in the non short-circuited position,
- The orange version can be used as fixed jumpers.

Ordering details

Description		Color	Type	Part Number	Pkg qty	Weight (1 pce) g
8 mm 0.315 in spacing	2 poles	Yellow	SC-JB8-2	1SNK900652R0000	25	2.00
	3 poles		SC-JB8-3	1SNK900653R0000	25	3.4
	4 poles		SC-JB8-4	1SNK900654R0000	25	4.7
	3/5 poles		SC-JB8-5	1SNK900655R0000	25	4.7
	3 poles	Orange	SC-JB8-3-OR	1SNK900657R0000	25	
	4 poles		SC-JB8-4-OR	1SNK900658R0000	25	

Main technical data

Material specifications	Insulating material	Polyamide	
	Flammability	V0	
	NF F 16 101	I2F3	
Ambient temperature min/max	Service IEC 60068-2-1	-55 ... +110 °C	-67 ... +230 °F
	Storage	-55 ... +110 °C	-67 ... +230 °F
	Installing	-5 ... +40 °C	+23 ... +104 °F

All the main technical data provided are "manufacturer" values

RoHS
RoHS

5

1SNK161063S0201

Technical data valid for copper conductors only.

1SNC160482F0014

AJS

4 mm 0.157 in spacing

AJS test sockets

Description

– Insulated test sockets,
  - Many colors available for circuit identification,
  - Compatible with standard DIA 4 mm 0.157 in test plugs:
  - insulated (according to IEC 60101-031) - not insulated (with mobile protection),
  - Compatible with ZS10-ST…SNK series terminal blocks, M6/8.ST...SNA series terminal blocks, D6/8. ST.RS..Solution series terminal blocks

Ordering details

Description	Color	Type	Part Number		Pkg qty	Weight (1 pce) g
Test sockets DIA 4 mm 0.157 in	Grey	AJS9-GR	1SNA206682R0300		25	3.60
	Blue	AJS9-BL	1SNA206683R0400		25	3.60
	Yellow	AJS9	1SNA179726R0200		25	3.60
	Green	AJS9-GN	1SNA206681R0200		25	3.60
	Red	AJS9-RD	1SNA206720R1400		25	3.60
	Purple	AJS9-PR	1SNA206772R0000		25	3.60
	Brown	AJS9-BR	1SNA206782R0000		25	3.60
	White	AJS9-WH	1SNA206765R0000		25	3.60
	Black	AJS9-BK	1SNA206680R1500		25	3.60

Main technical data

Material specifications	Insulating material	Polyamide	
	Flammability	V0	
	NF F 16 101	I2F3	
Ambient temperature min/max	Service IEC 60068-2-1	-55 ... +110 °C	-67 ... +230 °F
	Storage	-55 ... +110 °C	-67 ... +230 °F
	Installing	-5 ... +40 °C	+23 ... +104 °F

Mounting instructions

Tool		Flat screwdriver Ø 3.5 mm Ø 0.138 in
Torque		0.5 Nm ± 0.1 4.42 lb.in ± 0.88

All the main technical data provided are "manufacturer" values

RoHS
RoHS

Technical data valid for copper conductors only.

1SNK161064S0201

EDK2.5-22

EDK2.5-22 end sections

Description

– Compatible with ZDK2.5-22 and ZDK4-22 pluggable terminal blocks.

Description	Color	Type	Part Number	Pkg qty	Weight 1 pce g
2.2 mm 0.087 in spacing	Dark grey	EDK2.5-22	1SNK805910R0000	20	3.08

EDK2.5-21

EDK2.5-21 end sections

Description

– Compatible with ZDK2.5-11, ZDK2.5-11-BL and ZDK2.5-11-PE pluggable terminal blocks.

Description	Color	Type	Part Number	Pkg qty	Weight 1 pce g
1.5 mm 0.059 in spacing	Dark grey	EDK2.5-21	1SNK805914R0000	20	1.90

EDK2.5-11

EDK2.5-11 end sections

Description

– Compatible with ZD2.5-11 pluggable terminal blocks.

Description	Color	Type	Part Number	Pkg qty	Weight 1 pce g
1.5 mm 0.059 in spacing	Dark grey	EDK2.5-11	1SNK805915R0000	20	1.49

EDK2.5-D

EDK2.5-D end sections

Description

– Compatible with ZDK2.5-D2, ZDK2.5-D2-BL, ZDK2.5-D1, ZDK2.5-D1-PE and ZDK2.5-D2-PE pluggable terminal blocks.

Description	Color	Type	Part Number	Pkg qty	Weight 1 pce g
2 mm 0.079 in spacing	Dark grey	EDK2.5-D	1SNK805913R0000	20	3.88

Main technical data

Material specifications	Insulating material	Polyamide	
	Flammability	V0	
	NF F 16 101	I2F2	
Ambient temperature min/max	Service IEC 60068-2-1	-55 ... +110 °C	-67 ... +230 °C
	Storage	-55 ... +110 °C	-67 ... +230 °C
	Installing	-5 ... +40 °C	+23 ... +104 °C

All the main technical data provided are "manufacturer" values.

RoHS
RoHS

Technical data valid for copper conductors only.

1SNK164033S0201

5

1SNK164028V0014

ED2.5-22

ED2.5-22 end sections

Description

– Compatible with ZD2.5-22 and ZD2.5-22-PE pluggable terminal blocks.

Ordering details

Description	Color	Type	Part Number		Pkg qty	Weight (1 pce) g
2 mm 0.079 in spacing	Dark grey	ED2.5-22	1SNK805917R0000		20	3.64

1SNK160302V0014

EDS4-22

EDS4-22 end sections

Description

– Compatible with ZDS4-22 pluggable terminal block.

Ordering details

Description	Color	Type	Part Number		Pkg qty	Weight (1 pce) g
0.8 mm 0.031 in spacing	Dark grey	EDS4-22	1SNK805911R0000		20	1.85

Main technical data

Material specifications	Insulating material	Polyamide	
	Flammability	V0	
	NF F 16 101	I2F2	
Ambient temperature min/max	Service IEC 60068-2-1	-55 ... +110 °C	-67 ... +230 °C
	Storage	-55 ... +110 °C	-67 ... +230 °C
	Installing	-5 ... +40 °C	+23 ... +104 °C

All the main technical data provided are "manufacturer" values.

RoHS
RoHS

Technical data valid for copper conductors only.

1SNK164034S0201

COP

COP coding pegs

Description

– The coding pegs prevent plugs to be inserted into the wrong circuit.

Ordering details

Description	Color	Type	Part Number		Pkg qty	Weight (1 pce) g
	Dark grey	COP-ZD	1SNK900636R0000		10	3.57

Main technical data

Material specifications	Insulating material	Polyamide	
	Flammability	V0	
	NF F 16 101	I2F2	
Ambient temperature min/max	Service IEC 60068-2-1	-55 ... +110 °C	-67 ... +230 °F
	Storage	-55 ... +110 °C	-67 ... +230 °F
	Installing	-5 ... +40 °C	+23 ... +104 °F

All the main technical data provided are "manufacturer" values.

RoHS
RoHS

Mounting instructions

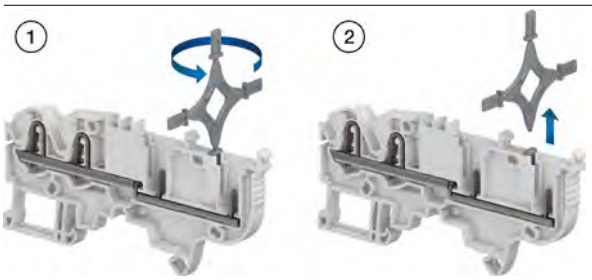

VR

9.4 mm 0.370 in spacing

VR locking devices

Description

– Automatic locking providing excellent plug withstand in case of accidental pulling,
– Lock safely one or two CDK or CDS plugs on ZDK and ZDS pluggable terminal blocks,
– Install one VR... up to 8 poles plugs assembly and two VR... up to 15 poles assembly.

Ordering details

Description	Color	Type	Part Number		Pkg qty	Weight (1 pce) g
9.4 mm 0.370 in spacing	Black	VR-ZD	1SNK900637R0000		50	6.5

Main technical data

Material specifications	Insulating material	Polyacetal	
	Flammability	HB	
	NF F 16 101		
Ambient temperature min/max	Service IEC 60068-2-1	-55 ... +110 °C	-67 ... +230 °F
	Storage	-55 ... +110 °C	-67 ... +230 °F
	Installing	-5 ... +40 °C	+23 ... +104 °F

All the main technical data provided are "manufacturer" values.

RoHS
RoHS

Mounting instructions

1SNK164009S0201

Technical data valid for copper conductors only.

SNK series, marking solutions

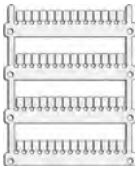

Selection guide		238-239
MG3 thermal transfer printer		240-241
AMS 600 and AMS 250 plotter		242-243

Terminal block markers

5.2 mm 0.205 in spacing

MC512, MG-CPM-13	Blank card in polycarbonate	244
MC512PA	Blank card in polyamide	245
	Pre-printed marker card for horizontal terminal block assembly	246-247
	Pre-printed marker card for vertical terminal block assembly	248-249

6 mm 0.236 in spacing

MC612, MG-CPM-13	Blank card in polycarbonate	250
MC612PA	Blank card in polyamide	251
	Pre-printed marker card for horizontal terminal block assembly	252-253
	Pre-printed marker card for vertical terminal block assembly	254

8 mm 0.315 in spacing

MC812, MC812PA	Blank card	256
MC812PA	Pre-printed marker card for horizontal terminal block assembly	257-258
	Pre-printed marker card for vertical terminal block assembly	259-260

Markers

UMH	Universal wire markers holder	261
MG2-TDMO	Clip-on blank wire marker	261
MG-TAR, MG-TAA	Markers for components	262
MG-TAPW	Markers for components	263
MCLH	Label	264

Marking systems

HTP500	Consumable	265
MG3	Thermal transfer printer	266
AMS	Plotter	267-268

For versatile applications

Marking systems	MG3
Technology	Thermal transfer
Printing mode	Manual
Printing speed	Medium
Printing quality	300 x 600 dpi
1 ribbon or ink cartridge printing capacity	~ 160 000, MG-CPM (5 x 10 mm markers)
Printing color available (monochrome)	Black / Red / Blue / Green / White
Terminal block markers material	Polycarbonate
Terminal block markers	
SNK series terminal blocks blank markers polyamide	–
SNK series terminal blocks blank markers polycarbonate	MG-CPM
SNK series terminal blocks blank markers PVC	MG-CPMF
End stop markers	2 marker types
Other terminal blocks manufacturers blank markers	15 manufacturers
Wires and cables markers	4 marker types
Components and equipment markers	9 marker types

For basic marking applications

	AMS 600 - AMS 250
	Plotter
	Manual
	Low
	300 x 300 dpi
	~ 230 000 markers (with 3 characters per markers)
	Black
	Polyamide
	MC…PA
	–
	–
	4 marker types
	5 manufacturers
	1 marker type
	9 marker types

1SNC160226S0201

The versatile, compact and robust marking system

MARKINGenius® MG3 is a high resolution printer based on thermal transfer technology for producing high quality identification and labelling for terminal blocks, cables and all equipment mounted in electrical panels.

Compact, ergonomic, clean and quiet, MARKINGenius® MG3 may be conveniently located in an office or workshop or easily transported in the field.

Thermal transfer technology uses heat to transfer characters or symbols onto a plastic marker through an ink ribbon. Besides the excellent printing quality, there is no drying time and the markers are instantly usable.
With the MG3 thermal transfer printer, forget about drying times and clogged print head problems.

Combined simplicity, performance and make savings

Facilitate your printing process
Compact design (382 x 230 x 230 mm) facilitates use in workshops or in the field.
Easy to install and use: comprehensive quick-start kit. Intuitive software with easy data import and entry.
Versatile: many different media available: plastic markers, stickers, labels etc.

Save time and consumables
Gain time with a short printing process: 12 seconds cycle. Carriage loading and unloading operation is fast and simple.
Economic: up to 300 000 markers with one ribbon. Partially printed marker card may be reused to avoid wastage.
No drying time: printed markers are immediately ready to use.

Experience quality
High Quality printing: 300 x 600 dpi for image or graphic printing.
Robust: all moving parts are in metal.

High quality printing

Short printing cycle of 12 seconds

Economic: up to 300 000 markers with one ribbon

Many media types available for printing

1SNC160211S0201

The MG3 printer is delivered with a comprehensive set of accessories for getting started quickly

Kit (Part number: 1SNB419001R0000) including:

- 1 Thermal transfer printer
- 1 Software CD
- 1 Power supply cable
- 1 USB cable
- 1 Installation, operating, maintenance and user documentation
- 1 Protective cover
- 1 Ribbon take up spool
- 1 MG2-QTB support plate for terminal block markers (MG-CPM-01, 02, 03, 04, 07)
- 1 MG2-PWC support plate for wire and cable markers (MG-TPM)
- 1 MG2-PLT support plate for wire and cable markers (MG-TPMF) and various labels and signs
- 1 MG2-ETB Support plate for SNK series terminal block markers (MG-CPM-13)
- 1 MG2-ETR Black printing ribbon.

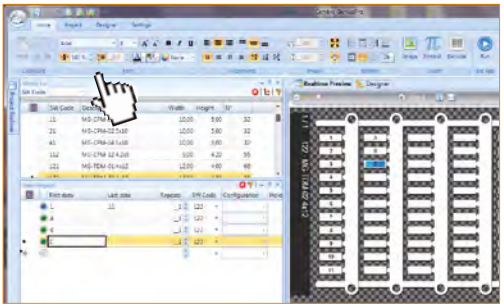

Genius Pro software

The Genius Pro software application benefits from long experience in the field and requires the operator to have only basic skills in order to use it. It is application-oriented and provides fast and easy data entry including a dynamic full-size media preview giving an accurate representation of the current job.

Features / characteristics:

- More than ten types of counter such as *.txt, *.cad, *.dbf, *.xls can be imported
- AutoCAD, Elcad, Spac and Excel import
- MATRIX, ACS and Simplo conversion
- Optimised printing of media for cables, terminal blocks, control gear, connectors, push buttons, components, panels and self-adhesive labels
- Specially developed proprietary Genius font and also Windows fonts
- Designs customised media
- Vector, drawing and clip art printing
- Free upgrades for each new release
- Microsoft® Windows® XP, Windows Vista®, Windows 2000 SP4®, Windows 7®.

1SNC160211S0201

AMS 600

Universal printing plotter

Compatible with all original manufacturer terminal block markers (polyamide), it can also print other identification supports such as: wire and cable markers, push buttons, panels…
This plotter offers a large working area, hosting up to 4 different support plates for one plot job.

Error detection mode

The A3 panel automatically recognises the support plate and avoids the need to select marking elements, it also warns the user when the support is wrongly installed.

Dry out protection system

Pens are prevented from drying out thanks to AMS 600 integrated pen station.

AMS 250

Compact

This A4 plotter is smaller than AMS 600 and is more suited to a cluttered environment.

1SNC160215S0201

Automatic installation

The installation program starts automatically. The computer just needs to be rebooted after it has finished and printing can start.

What you see is what you get !

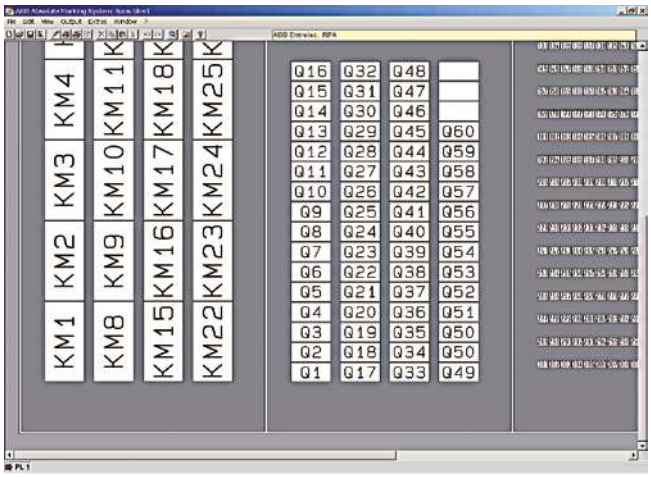

User friendly
Microsoft® Windows® software

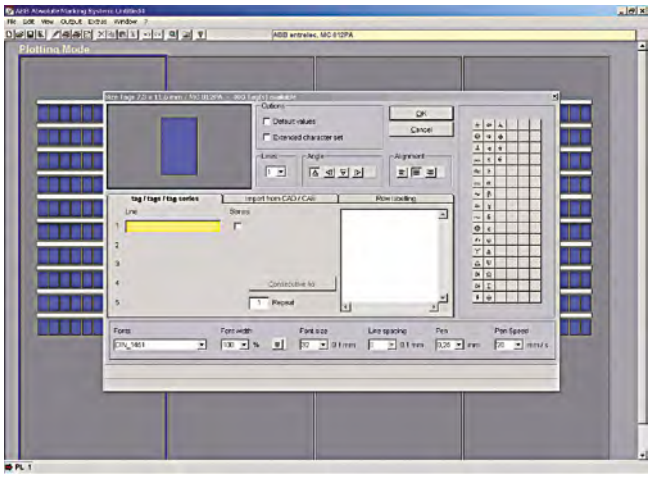

Time saving: data import function
from CAD, TXT and Excel® files

Microsoft, Windows, Excel are trademarks of Microsoft Corporation.

New special ink disposable plotter pens ED-R

- Disposable pens ED-R almost never clog, they are ideal for use in particularly dry environments.
- These pens are filled with the permanent ink ED, most suitable for marking various plastic surfaces.
- The ED ink should only be used on plastic material. Do not clean or touch with aggressive fluids.
- For applications outside of the control panel the ink P 2.0 is more suitable and durable.

1SNC160215S0201

MC512

HTP500-V2

MC512 terminal block markers

Description

- MC512 marker card in polycarbonate for high marking quality, durability and speed when marked with the HTP500 printer,
- Excellent marking durability in the most severe environments,
- Improved marking visibility thanks to the increased marking surface +20% (12 mm 0.472 in).

Main technical data

Material	Flammability	Maximum printed digits				Dimensions	
						mm	inches
Polycarbonate	V0	Horizontal	3	Vertical	8	4.8 x 12	0.189 x 0.472

Ordering details

Description	Number of markers per card	Color	Type	Part Number		Pkg card	Weight (1 pce) g
Blank card	45	White	MC512	1SNK140000R0000		22	9.00
		Yellow	MC512-YL	1SNK140004R0000		22	9.00

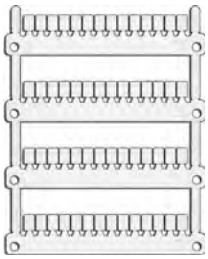

MG-CPM-13

MG3 KIT

MG-CPM-13 terminal block markers

Description

- MG-CPM-13 41790 and 41740 markers are used for marking 5.2 mm 0.205 in spacing SNK terminal blocks,
- Provide an elevate mechanical robustness, high dimensional stability and are halogen free,
- Single application on terminal block,
- 35 cards per packing

Main technical data

Material	Flammability	Maximum printed digits				Dimensions	
						mm	inches
Polycarbonate	V2	Horizontal	3	Vertical	8	4.8 x 12	0.196 x 0.472

Ordering details

Description	Number of markers per card	Color	Type	Part Number		Pkg marker	Weight (1 pce) g
Blank card	56	White	MG-CPM 13 41790	1SNB041790R0512		1960	0.232
		Yellow	MG-CPM 13 41740	1SNB041740R0512		1960	0.232

Marking systems

Description	Type	Part Number		Pkg qty	Weight (1 pce) g
Thermal transfer printer	MG3 KIT	1SNB419001R0000		1	12600.00

Marking systems accessories

Description	Type	Part Number		Pkg qty	Weight (1 pce) g
Support plate for MG-CPM-13	MG2-ETB 991016	1SNB991016R0000		1	100.00

MC512PA

AMS 600

MC512PA terminal block markers

Description

- MC512PA marker card in polyamide to be marked on AMS 600 marking table for medium scale volumes and standard industrial applications,
- Terminal blocks are directly independent after strip mounting,
- Improved marking visibility thanks to the increased marking surface +20% (12 mm 0.472 in).

Main technical data

Material	Flammability	Maximum printed digits				Dimensions	
						mm	inches
Polyamide	V2	Horizontal	3	Vertical	8	4.8 x 12	0.189 x 0.472

Ordering details

Description	Number of markers per card	Color	Type	Part Number		Pkg card	Weight (1 pce) g
Blank card	100	White ☐	MC512PA	1SNK149999R0000		20	10.00

Marking systems

Description	Type	Part Number		Pkg qty	Weight (1 pce) g
AMS plotter	AMS 600 KIT	1SNA360000R2400		1	12600.00

Marking systems accessories

Description	Type	Part Number		Pkg qty	Weight (1 pce) g
Marking support plate for MC PA marker cards (3 MC PA marker cards per plate)	SPRC 30-3	1SNA360039R1700		1	300.00

1SNK160076S0201

MC512PA terminal block markers

Pre-printed marker card for horizontal terminal block assembly

MC512PA

5.2 mm 0.205 in spacing

Description

Save printing time with our large pre-printed cards offer with pre-printed numbers, letters or symbols.

Main technical data

Material	Flammability	Dimensions mm	Dimensions inches
Polyamide	V2	4.8 x 12	0.189 x 0.472

Ordering details

Description	Number of markers per card	Color	Type	Part Number		Pkg card	Weight (1 pce) g
0->9 (x10)	100	White ☐	MC512PA	1SNK140091R0000		1	10.00
1->10 (x10)	100	White ☐	MC512PA	1SNK140011R0000		1	10.00
11->20 (x10)	100	White ☐	MC512PA	1SNK140021R0000		1	10.00
21->30 (x10)	100	White ☐	MC512PA	1SNK140031R0000		1	10.00
31->40 (x10)	100	White ☐	MC512PA	1SNK140041R0000		1	10.00
41->50 (x10)	100	White ☐	MC512PA	1SNK140051R0000		1	10.00
51->60 (x10)	100	White ☐	MC512PA	1SNK140061R0000		1	10.00
61->70 (x10)	100	White ☐	MC512PA	1SNK140071R0000		1	10.00
71->80 (x10)	100	White ☐	MC512PA	1SNK140081R0000		1	10.00
81->90 (x10)	100	White ☐	MC512PA	1SNK140083R0000		1	10.00
91->100 (x10)	100	White ☐	MC512PA	1SNK140101R0000		1	10.00
101->110 (x10)	100	White ☐	MC512PA	1SNK140111R0000		1	10.00
111->120 (x10)	100	White ☐	MC512PA	1SNK140121R0000		1	10.00
121->130 (x10)	100	White ☐	MC512PA	1SNK140131R0000		1	10.00
131->140 (x10)	100	White ☐	MC512PA	1SNK140141R0000		1	10.00
141->150 (x10)	100	White ☐	MC512PA	1SNK140151R0000		1	10.00
151->160 (x10)	100	White ☐	MC512PA	1SNK140161R0000		1	10.00
161->170 (x10)	100	White ☐	MC512PA	1SNK140171R0000		1	10.00
171->180 (x10)	100	White ☐	MC512PA	1SNK140181R0000		1	10.00
181->190 (x10)	100	White ☐	MC512PA	1SNK140191R0000		1	10.00
191->200 (x10)	100	White ☐	MC512PA	1SNK140201R0000		1	10.00
1->100	100	White ☐	MC512PA	1SNK145011R0000		1	10.00
101->200	100	White ☐	MC512PA	1SNK145021R0000		1	10.00
201->300	100	White ☐	MC512PA	1SNK145031R0000		1	10.00
301->400	100	White ☐	MC512PA	1SNK145041R0000		1	10.00
401->500	100	White ☐	MC512PA	1SNK145051R0000		1	10.00
501->600	100	White ☐	MC512PA	1SNK145061R0000		1	10.00
601->700	100	White ☐	MC512PA	1SNK145071R0000		1	10.00
701->800	100	White ☐	MC512PA	1SNK145081R0000		1	10.00
801->900	100	White ☐	MC512PA	1SNK145091R0000		1	10.00
A (x100)	100	White ☐	MC512PA	1SNK146011R0000		1	10.00
B (x100)	100	White ☐	MC512PA	1SNK146021R0000		1	10.00
C (x100)	100	White ☐	MC512PA	1SNK146031R0000		1	10.00
D (x100)	100	White ☐	MC512PA	1SNK146041R0000		1	10.00
E (x100)	100	White ☐	MC512PA	1SNK146051R0000		1	10.00
F (x100)	100	White ☐	MC512PA	1SNK146061R0000		1	10.00
G (x100)	100	White ☐	MC512PA	1SNK146071R0000		1	10.00
H (x100)	100	White ☐	MC512PA	1SNK146081R0000		1	10.00
I (x100)	100	White ☐	MC512PA	1SNK146091R0000		1	10.00
J (x100)	100	White ☐	MC512PA	1SNK146101R0000		1	10.00
K (x100)	100	White ☐	MC512PA	1SNK146111R0000		1	10.00
L (x100)	100	White ☐	MC512PA	1SNK146121R0000		1	10.00
M (x100)	100	White ☐	MC512PA	1SNK146131R0000		1	10.00
N (x100)	100	White ☐	MC512PA	1SNK146141R0000		1	10.00
O (x100)	100	White ☐	MC512PA	1SNK146151R0000		1	10.00
P (x100)	100	White ☐	MC512PA	1SNK146161R0000		1	10.00
Q (x100)	100	White ☐	MC512PA	1SNK146171R0000		1	10.00
R (x100)	100	White ☐	MC512PA	1SNK146181R0000		1	10.00
S (x100)	100	White ☐	MC512PA	1SNK146191R0000		1	10.00
T (x100)	100	White ☐	MC512PA	1SNK146201R0000		1	10.00
U (x100)	100	White ☐	MC512PA	1SNK146211R0000		1	10.00
V (x100)	100	White ☐	MC512PA	1SNK146221R0000		1	10.00
W (x100)	100	White ☐	MC512PA	1SNK146231R0000		1	10.00
X (x100)	100	White ☐	MC512PA	1SNK146241R0000		1	10.00
Y (x100)	100	White ☐	MC512PA	1SNK146251R0000		1	10.00

Continue on next page →

MC512PA terminal block markers

Pre-printed marker card for horizontal terminal block assembly

MC512PA

5.2 mm 0.205 in spacing

Ordering details

Description	Number of markers per card	Color	Type	Part Number		Pkg card	Weight (1 pce) g
← Continuation of previous page							
Z (x100)	100	White	MC512PA	1SNK146261R0000		1	10.00
0 (x100)	100	White	MC512PA	1SNK147001R0000		1	10.00
1 (x100)	100	White	MC512PA	1SNK147011R0000		1	10.00
2 (x100)	100	White	MC512PA	1SNK147021R0000		1	10.00
3 (x100)	100	White	MC512PA	1SNK147031R0000		1	10.00
4 (x100)	100	White	MC512PA	1SNK147041R0000		1	10.00
5 (x100)	100	White	MC512PA	1SNK147051R0000		1	10.00
6 (x100)	100	White	MC512PA	1SNK147061R0000		1	10.00
7 (x100)	100	White	MC512PA	1SNK147071R0000		1	10.00
8 (x100)	100	White	MC512PA	1SNK147081R0000		1	10.00
9 (x100)	100	White	MC512PA	1SNK147091R0000		1	10.00
+ (x100)	100	White	MC512PA	1SNK148001R0000		1	10.00
- (x100)	100	White	MC512PA	1SNK148011R0000		1	10.00
~ (x100)	100	White	MC512PA	1SNK148021R0000		1	10.00
= (x100)	100	White	MC512PA	1SNK148031R0000		1	10.00
⏚ (x100)	100	White	MC512PA	1SNK148041R0000		1	10.00
L1 (x100)	100	White	MC512PA	1SNK148051R0000		1	10.00
L2 (x100)	100	White	MC512PA	1SNK148061R0000		1	10.00
L3 (x100)	100	White	MC512PA	1SNK148071R0000		1	10.00
PE (x100)	100	White	MC512PA	1SNK148091R0000		1	10.00
U1 (x100)	100	White	MC512PA	1SNK148101R0000		1	10.00
U2 (x100)	100	White	MC512PA	1SNK148111R0000		1	10.00
U3 (x100)	100	White	MC512PA	1SNK148121R0000		1	10.00
V1 (x100)	100	White	MC512PA	1SNK148131R0000		1	10.00
V2 (x100)	100	White	MC512PA	1SNK148141R0000		1	10.00
V3 (x100)	100	White	MC512PA	1SNK148151R0000		1	10.00
W1 (x100)	100	White	MC512PA	1SNK148161R0000		1	10.00
W2 (x100)	100	White	MC512PA	1SNK148171R0000		1	10.00
W3 (x100)	100	White	MC512PA	1SNK148181R0000		1	10.00
L1-L2-L3-N-PE (x20)	100	White	MC512PA	1SNK149001R0000		1	10.00
U1-U2-U3-V1-V2-V3-W1-W2-W3 (x10) + U1 (x10)	100	White	MC512PA	1SNK149011R0000		1	10.00

1SNK160004S0201 - Rev. A

MC512PA terminal block markers

Pre-printed marker card for vertical terminal block assembly

MC512PA

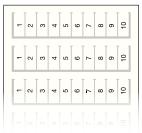

5.2 mm 0.205 in spacing

Description

Save printing time with our large pre-printed cards offer with pre-printed numbers, letters or symbols.

Main technical data

Material	Flammability	Dimensions mm	Dimensions inches
Polyamide	V2	4.8 x 12	0.189 x 0.472

Ordering details

Description	Number of markers per card	Color	Type	Part Number		Pkg card	Weight (1 pce) g
0->9 (x10)	100	White ☐	MC512PA	1SNK140092R0000		1	10.00
1->10 (x10)	100	White ☐	MC512PA	1SNK140012R0000		1	10.00
11->20 (x10)	100	White ☐	MC512PA	1SNK140022R0000		1	10.00
21->30 (x10)	100	White ☐	MC512PA	1SNK140032R0000		1	10.00
31->40 (x10)	100	White ☐	MC512PA	1SNK140042R0000		1	10.00
41->50 (x10)	100	White ☐	MC512PA	1SNK140052R0000		1	10.00
51->60 (x10)	100	White ☐	MC512PA	1SNK140062R0000		1	10.00
61->70 (x10)	100	White ☐	MC512PA	1SNK140072R0000		1	10.00
71->80 (x10)	100	White ☐	MC512PA	1SNK140082R0000		1	10.00
81->90 (x10)	100	White ☐	MC512PA	1SNK140084R0000		1	10.00
91->100 (x10)	100	White ☐	MC512PA	1SNK140102R0000		1	10.00
101->110 (x10)	100	White ☐	MC512PA	1SNK140112R0000		1	10.00
111->120 (x10)	100	White ☐	MC512PA	1SNK140122R0000		1	10.00
121->130 (x10)	100	White ☐	MC512PA	1SNK140132R0000		1	10.00
131->140 (x10)	100	White ☐	MC512PA	1SNK140142R0000		1	10.00
141->150 (x10)	100	White ☐	MC512PA	1SNK140152R0000		1	10.00
151->160 (x10)	100	White ☐	MC512PA	1SNK140162R0000		1	10.00
161->170 (x10)	100	White ☐	MC512PA	1SNK140172R0000		1	10.00
171->180 (x10)	100	White ☐	MC512PA	1SNK140182R0000		1	10.00
181->190 (x10)	100	White ☐	MC512PA	1SNK140192R0000		1	10.00
191->200 (x10)	100	White ☐	MC512PA	1SNK140202R0000		1	10.00
1->100	100	White ☐	MC512PA	1SNK145012R0000		1	10.00
101->200	100	White ☐	MC512PA	1SNK145022R0000		1	10.00
201->300	100	White ☐	MC512PA	1SNK145032R0000		1	10.00
301->400	100	White ☐	MC512PA	1SNK145042R0000		1	10.00
401->500	100	White ☐	MC512PA	1SNK145052R0000		1	10.00
501->600	100	White ☐	MC512PA	1SNK145062R0000		1	10.00
601->700	100	White ☐	MC512PA	1SNK145072R0000		1	10.00
701->800	100	White ☐	MC512PA	1SNK145082R0000		1	10.00
801->900	100	White ☐	MC512PA	1SNK145092R0000		1	10.00
901->1000	100	White ☐	MC512PA	1SNK145102R0000		1	10.00
A (x100)	100	White ☐	MC512PA	1SNK146012R0000		1	10.00
B (x100)	100	White ☐	MC512PA	1SNK146022R0000		1	10.00
C (x100)	100	White ☐	MC512PA	1SNK146032R0000		1	10.00
D (x100)	100	White ☐	MC512PA	1SNK146042R0000		1	10.00
E (x100)	100	White ☐	MC512PA	1SNK146052R0000		1	10.00
F (x100)	100	White ☐	MC512PA	1SNK146062R0000		1	10.00
G (x100)	100	White ☐	MC512PA	1SNK146072R0000		1	10.00
H (x100)	100	White ☐	MC512PA	1SNK146082R0000		1	10.00
I (x100)	100	White ☐	MC512PA	1SNK146092R0000		1	10.00
J (x100)	100	White ☐	MC512PA	1SNK146102R0000		1	10.00
K (x100)	100	White ☐	MC512PA	1SNK146112R0000		1	10.00
L (x100)	100	White ☐	MC512PA	1SNK146122R0000		1	10.00
M (x100)	100	White ☐	MC512PA	1SNK146132R0000		1	10.00
N (x100)	100	White ☐	MC512PA	1SNK146142R0000		1	10.00
O (x100)	100	White ☐	MC512PA	1SNK146152R0000		1	10.00
P (x100)	100	White ☐	MC512PA	1SNK146162R0000		1	10.00
Q (x100)	100	White ☐	MC512PA	1SNK146172R0000		1	10.00
R (x100)	100	White ☐	MC512PA	1SNK146182R0000		1	10.00
S (x100)	100	White ☐	MC512PA	1SNK146192R0000		1	10.00
T (x100)	100	White ☐	MC512PA	1SNK146202R0000		1	10.00
U (x100)	100	White ☐	MC512PA	1SNK146212R0000		1	10.00
V (x100)	100	White ☐	MC512PA	1SNK146222R0000		1	10.00

Continue on next page →

MC512PA terminal block markers

Pre-printed marker card for vertical terminal block assembly

MC512PA

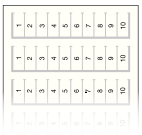

5.2 mm 0.205 in spacing

Ordering details

Description	Number of markers per card	Color	Type	Part Number		Pkg card	Weight (1 pce) g
← Continuation of previous page							
W (x100)	100	White	MC512PA	1SNK146232R0000		1	10.00
X (x100)	100	White	MC512PA	1SNK146242R0000		1	10.00
Y (x100)	100	White	MC512PA	1SNK146252R0000		1	10.00
Z (x100)	100	White	MC512PA	1SNK146262R0000		1	10.00
0 (x100)	100	White	MC512PA	1SNK147002R0000		1	10.00
1 (x100)	100	White	MC512PA	1SNK147012R0000		1	10.00
2 (x100)	100	White	MC512PA	1SNK147022R0000		1	10.00
3 (x100)	100	White	MC512PA	1SNK147032R0000		1	10.00
4 (x100)	100	White	MC512PA	1SNK147042R0000		1	10.00
5 (x100)	100	White	MC512PA	1SNK147052R0000		1	10.00
6 (x100)	100	White	MC512PA	1SNK147062R0000		1	10.00
7 (x100)	100	White	MC512PA	1SNK147072R0000		1	10.00
8 (x100)	100	White	MC512PA	1SNK147082R0000		1	10.00
9 (x100)	100	White	MC512PA	1SNK147092R0000		1	10.00
+ (x100)	100	White	MC512PA	1SNK148002R0000		1	10.00
- (x100)	100	White	MC512PA	1SNK148012R0000		1	10.00
~ (x100)	100	White	MC512PA	1SNK148022R0000		1	10.00
= (x100)	100	White	MC512PA	1SNK148032R0000		1	10.00
⏚ (x100)	100	White	MC512PA	1SNK148042R0000		1	10.00
L1 (x100)	100	White	MC512PA	1SNK148052R0000		1	10.00
L2 (x100)	100	White	MC512PA	1SNK148062R0000		1	10.00
L3 (x100)	100	White	MC512PA	1SNK148072R0000		1	10.00
PE (x100)	100	White	MC512PA	1SNK148092R0000		1	10.00
U1 (x100)	100	White	MC512PA	1SNK148102R0000		1	10.00
U2 (x100)	100	White	MC512PA	1SNK148112R0000		1	10.00
U3 (x100)	100	White	MC512PA	1SNK148122R0000		1	10.00
V1 (x100)	100	White	MC512PA	1SNK148132R0000		1	10.00
V2 (x100)	100	White	MC512PA	1SNK148142R0000		1	10.00
V3 (x100)	100	White	MC512PA	1SNK148152R0000		1	10.00
W1 (x100)	100	White	MC512PA	1SNK148162R0000		1	10.00
W2 (x100)	100	White	MC512PA	1SNK148172R0000		1	10.00
W3 (x100)	100	White	MC512PA	1SNK148182R0000		1	10.00
+24V (x100)	100	White	MC512PA	1SNK148192R0000		1	10.00
+48V (x100)	100	White	MC512PA	1SNK148202R0000		1	10.00
-24V (x100)	100	White	MC512PA	1SNK148212R0000		1	10.00
-48V (x100)	100	White	MC512PA	1SNK148222R0000		1	10.00
L1-L2-L3-N-PE (x20)	100	White	MC512PA	1SNK149002R0000		1	10.00
U1-U2-U3-V1-V2-V3-W1-W2-W3 (x10) + U1 (x10)	100	White	MC512PA	1SNK149012R0000		1	10.00

1SNK160005S0201 - Rev. A

MC612

HTP500-V2

MC612 terminal block markers

Description

- MC612 marker card in polycarbonate for high marking quality, durability and speed when marked with the HTP500 printer,
- Excellent marking durability in the most severe environments,
- Improved marking visibility thanks to the increased marking surface +20% (12 mm 0.472 in).

Main technical data

Material	Flammability	Maximum printed digits				Dimensions mm	Dimensions inches
Polycarbonate	V0	Horizontal	3	Vertical	8	5.6 x 12	0.220 x 0.472

Ordering details

Description	Number of markers per card	Color	Type	Part number		Pkg card	Weight (1 pce) g
Blank card	39	White	MC612	1SNK150000R0000		22	10.00
		Yellow	MC612-YL	1SNK150004R0000		22	10.00

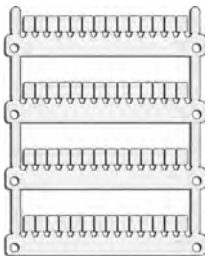

MG-CPM-13

MG3 KIT

MG-CPM-13 terminal block markers

Description

- MG-CPM-13 41791 and 41741 markers are used for marking 6 mm 0.236 in spacing SNK terminal blocks,
- Provide an elevate mechanical robustness, high dimensional stability and are halogen free,
- Single application on terminal block,
- 35 cards per packing.

Main technical data

Material	Flammability	Maximum printed digits				Dimensions mm	Dimensions inches
Polycarbonate	V0	Horizontal	3	Vertical	8	5.6 x 12	0.236 x 0.472

Ordering details

Description	Number of markers per card	Color	Type	Part number		Pkg marker	Weight (1 pce) g
Blank card	48	White	MG-CPM 13 41791	1SNB041791R0612		1680	0.273
		Yellow	MG-CPM 13 41741	1SNB041741R0612		1680	0.273

Marking systems

Description	Type	Part number		Pkg qty	Weight (1 pce) g
Thermal transfer printer	MG3 KIT	1SNB419001R0000		1	12600.00

Marking systems accessories

Description	Type	Part number		Pkg qty	Weight (1 pce) g
Support plate for MG-CPM-13	MG2-ETB 991016	1SNB991016R0000		1	100.00

MC612

AMS 600

MC612PA terminal block markers

Description

- MC612PA marker card in polyamide to be marked on AMS 600 marking table for medium scale volumes and standard industrial applications,
- Terminal blocks are directly independent after strip mounting,
- Improved marking visibility thanks to the increased marking surface +20% (12 mm 0.472 in).

Main technical data

Material	Flammability	Maximum printed digits				Dimensions	
						mm	inches
Polyamide	V2	Horizontal	3	Vertical	8	5.6 x 12	0.220 x 0.472

Ordering details

Description	Number of markers per card	Color	Type	Part Number		Pkg card	Weight (1 pce) g
Blank card	100	White ☐	MC612PA	1SNK159999R0000		20	11.00

Marking systems

Description	Type	Part Number		Pkg qty	Weight (1 pce) g
AMS plotter	AMS 600 KIT	1SNA360000R2400		1	12600.00

Marking systems accessories

Description	Type	Part Number		Pkg qty	Weight (1 pce) g
Marking support plate for MC PA marker cards (3 MC PA marker cards per plate)	SPRC 30-3	1SNA360039R1700		1	300.00

1SNK160077S0201

MC612PA terminal block markers

Pre-printed marker card for horizontal terminal block assembly

MC612PA

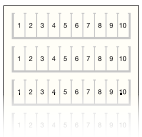

6 mm 0.236 in spacing

Description

Save printing time with our large pre-printed cards offer with pre-printed numbers, letters or symbols.

Main technical data

Material	Flammability	Dimensions mm	Dimensions inches
Polyamide	V2	5.6 x 12	0.220 x 0.472

Ordering details

Description	Number of markers per card	Color	Type	Part Number		Pkg card	Weight (1 pce) g
0->9 (x10)	100	White ☐	MC612PA	1SNK150091R0000		1	11.00
1->10 (x10)	100	White ☐	MC612PA	1SNK150011R0000		1	11.00
11->20 (x10)	100	White ☐	MC612PA	1SNK150021R0000		1	11.00
21->30 (x10)	100	White ☐	MC612PA	1SNK150031R0000		1	11.00
31->40 (x10)	100	White ☐	MC612PA	1SNK150041R0000		1	11.00
41->50 (x10)	100	White ☐	MC612PA	1SNK150051R0000		1	11.00
51->60 (x10)	100	White ☐	MC612PA	1SNK150061R0000		1	11.00
61->70 (x10)	100	White ☐	MC612PA	1SNK150071R0000		1	11.00
71->80 (x10)	100	White ☐	MC612PA	1SNK150081R0000		1	11.00
81->90 (x10)	100	White ☐	MC612PA	1SNK150083R0000		1	11.00
91->100 (x10)	100	White ☐	MC612PA	1SNK150101R0000		1	11.00
101->110 (x10)	100	White ☐	MC612PA	1SNK150111R0000		1	11.00
111->120 (x10)	100	White ☐	MC612PA	1SNK150121R0000		1	11.00
121->130 (x10)	100	White ☐	MC612PA	1SNK150131R0000		1	11.00
131->140 (x10)	100	White ☐	MC612PA	1SNK150141R0000		1	11.00
141->150 (x10)	100	White ☐	MC612PA	1SNK150151R0000		1	11.00
151->160 (x10)	100	White ☐	MC612PA	1SNK150161R0000		1	11.00
161->170 (x10)	100	White ☐	MC612PA	1SNK150171R0000		1	11.00
171->180 (x10)	100	White ☐	MC612PA	1SNK150181R0000		1	11.00
181->190 (x10)	100	White ☐	MC612PA	1SNK150191R0000		1	11.00
191->200 (x10)	100	White ☐	MC612PA	1SNK150201R0000		1	11.00
1->100	100	White ☐	MC612PA	1SNK155011R0000		1	11.00
101->200	100	White ☐	MC612PA	1SNK155021R0000		1	11.00
201->300	100	White ☐	MC612PA	1SNK155031R0000		1	11.00
301->400	100	White ☐	MC612PA	1SNK155041R0000		1	11.00
401->500	100	White ☐	MC612PA	1SNK155051R0000		1	11.00
501->600	100	White ☐	MC612PA	1SNK155061R0000		1	11.00
601->700	100	White ☐	MC612PA	1SNK155071R0000		1	11.00
701->800	100	White ☐	MC612PA	1SNK155081R0000		1	11.00
801->900	100	White ☐	MC612PA	1SNK155091R0000		1	11.00
A (x100)	100	White ☐	MC612PA	1SNK156011R0000		1	11.00
B (x100)	100	White ☐	MC612PA	1SNK156021R0000		1	11.00
C (x100)	100	White ☐	MC612PA	1SNK156031R0000		1	11.00
D (x100)	100	White ☐	MC612PA	1SNK156041R0000		1	11.00
E (x100)	100	White ☐	MC612PA	1SNK156051R0000		1	11.00
F (x100)	100	White ☐	MC612PA	1SNK156061R0000		1	11.00
G (x100)	100	White ☐	MC612PA	1SNK156071R0000		1	11.00
H (x100)	100	White ☐	MC612PA	1SNK156081R0000		1	11.00
I (x100)	100	White ☐	MC612PA	1SNK156091R0000		1	11.00
J (x100)	100	White ☐	MC612PA	1SNK156101R0000		1	11.00
K (x100)	100	White ☐	MC612PA	1SNK156111R0000		1	11.00
L (x100)	100	White ☐	MC612PA	1SNK156121R0000		1	11.00
M (x100)	100	White ☐	MC612PA	1SNK156131R0000		1	11.00
N (x100)	100	White ☐	MC612PA	1SNK156141R0000		1	11.00
O (x100)	100	White ☐	MC612PA	1SNK156151R0000		1	11.00
P (x100)	100	White ☐	MC612PA	1SNK156161R0000		1	11.00
Q (x100)	100	White ☐	MC612PA	1SNK156171R0000		1	11.00
R (x100)	100	White ☐	MC612PA	1SNK156181R0000		1	11.00
S (x100)	100	White ☐	MC612PA	1SNK156191R0000		1	11.00
T (x100)	100	White ☐	MC612PA	1SNK156201R0000		1	11.00
U (x100)	100	White ☐	MC612PA	1SNK156211R0000		1	11.00
V (x100)	100	White ☐	MC612PA	1SNK156221R0000		1	11.00
W (x100)	100	White ☐	MC612PA	1SNK156231R0000		1	11.00

Continue on next page →

MC612PA terminal block markers

Pre-printed marker card for horizontal terminal block assembly

MC612PA

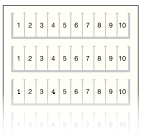

6 mm 0.236 in spacing

Ordering details

Description	Number of markers per card	Color	Type	Part Number		Pkg card	Weight (1 pce) g
← Continuation of previous page							
X (x100)	100	White ☐	MC612PA	1SNK156241R0000		1	11.00
Y (x100)	100	White ☐	MC612PA	1SNK156251R0000		1	11.00
Z (x100)	100	White ☐	MC612PA	1SNK156261R0000		1	11.00
0 (x100)	100	White ☐	MC612PA	1SNK157001R0000		1	11.00
1 (x100)	100	White ☐	MC612PA	1SNK157011R0000		1	11.00
2 (x100)	100	White ☐	MC612PA	1SNK157021R0000		1	11.00
3 (x100)	100	White ☐	MC612PA	1SNK157031R0000		1	11.00
4 (x100)	100	White ☐	MC612PA	1SNK157041R0000		1	11.00
5 (x100)	100	White ☐	MC612PA	1SNK157051R0000		1	11.00
6 (x100)	100	White ☐	MC612PA	1SNK157061R0000		1	11.00
7 (x100)	100	White ☐	MC612PA	1SNK157071R0000		1	11.00
8 (x100)	100	White ☐	MC612PA	1SNK157081R0000		1	11.00
9 (x100)	100	White ☐	MC612PA	1SNK157091R0000		1	11.00
+ (x100)	100	White ☐	MC612PA	1SNK158001R0000		1	11.00
- (x100)	100	White ☐	MC612PA	1SNK158011R0000		1	11.00
~ (x100)	100	White ☐	MC612PA	1SNK158021R0000		1	11.00
= (x100)	100	White ☐	MC612PA	1SNK158031R0000		1	11.00
Ground (x100)	100	White ☐	MC612PA	1SNK158041R0000		1	11.00
L1 (x100)	100	White ☐	MC612PA	1SNK158051R0000		1	11.00
L2 (x100)	100	White ☐	MC612PA	1SNK158061R0000		1	11.00
L3 (x100)	100	White ☐	MC612PA	1SNK158071R0000		1	11.00
PE (x100)	100	White ☐	MC612PA	1SNK158091R0000		1	11.00
U1 (x100)	100	White ☐	MC612PA	1SNK158101R0000		1	11.00
U2 (x100)	100	White ☐	MC612PA	1SNK158111R0000		1	11.00
U3 (x100)	100	White ☐	MC612PA	1SNK158121R0000		1	11.00
V1 (x100)	100	White ☐	MC612PA	1SNK158131R0000		1	11.00
V2 (x100)	100	White ☐	MC612PA	1SNK158141R0000		1	11.00
V3 (x100)	100	White ☐	MC612PA	1SNK158151R0000		1	11.00
W1 (x100)	100	White ☐	MC612PA	1SNK158161R0000		1	11.00
W2 (x100)	100	White ☐	MC612PA	1SNK158171R0000		1	11.00
W3 (x100)	100	White ☐	MC612PA	1SNK158181R0000		1	11.00
L1-L2-L3-N-PE (x20)	100	White ☐	MC612PA	1SNK159001R0000		1	11.00
U1-U2-U3-V1-V2-V3-W1-W2-W3 (x10) + U1 (x10)	100	White ☐	MC612PA	1SNK159011R0000		1	11.00

1SNK160007S0201 - Rev. A

MC612PA terminal block markers

Pre-printed marker card for vertical terminal block assembly

MC612PA

6 mm 0.236 in spacing

Description

Save printing time with our large pre-printed cards offer with pre-printed numbers, letters or symbols.

Main technical data

Material	Flammability	Dimensions mm	Dimensions inches
Polyamide	V2	5.6 x 12	0.220 x 0.472

Ordering details

Description	Number of markers per card	Color	Type	Part Number	Pkg card	Weight (1 pce) g
0->9 (x10)	100	White	MC612PA	1SNK150092R0000	1	11.00
1->10 (x10)	100	White	MC612PA	1SNK150012R0000	1	11.00
11->20 (x10)	100	White	MC612PA	1SNK150022R0000	1	11.00
21->30 (x10)	100	White	MC612PA	1SNK150032R0000	1	11.00
31->40 (x10)	100	White	MC612PA	1SNK150042R0000	1	11.00
41->50 (x10)	100	White	MC612PA	1SNK150052R0000	1	11.00
51->60 (x10)	100	White	MC612PA	1SNK150062R0000	1	11.00
61->70 (x10)	100	White	MC612PA	1SNK150072R0000	1	11.00
71->80 (x10)	100	White	MC612PA	1SNK150082R0000	1	11.00
81->90 (x10)	100	White	MC612PA	1SNK150084R0000	1	11.00
91->100 (x10)	100	White	MC612PA	1SNK150102R0000	1	11.00
101->110 (x10)	100	White	MC612PA	1SNK150112R0000	1	11.00
111->120 (x10)	100	White	MC612PA	1SNK150122R0000	1	11.00
121->130 (x10)	100	White	MC612PA	1SNK150132R0000	1	11.00
131->140 (x10)	100	White	MC612PA	1SNK150142R0000	1	11.00
141->150 (x10)	100	White	MC612PA	1SNK150152R0000	1	11.00
151->160 (x10)	100	White	MC612PA	1SNK150162R0000	1	11.00
161->170 (x10)	100	White	MC612PA	1SNK150172R0000	1	11.00
171->180 (x10)	100	White	MC612PA	1SNK150182R0000	1	11.00
181->190 (x10)	100	White	MC612PA	1SNK150192R0000	1	11.00
191->200 (x10)	100	White	MC612PA	1SNK150202R0000	1	11.00
1->100	100	White	MC612PA	1SNK155012R0000	1	11.00
101->200	100	White	MC612PA	1SNK155022R0000	1	11.00
201->300	100	White	MC612PA	1SNK155032R0000	1	11.00
301->400	100	White	MC612PA	1SNK155042R0000	1	11.00
401->500	100	White	MC612PA	1SNK155052R0000	1	11.00
501->600	100	White	MC612PA	1SNK155062R0000	1	11.00
601->700	100	White	MC612PA	1SNK155072R0000	1	11.00
701->800	100	White	MC612PA	1SNK155082R0000	1	11.00
801->900	100	White	MC612PA	1SNK155092R0000	1	11.00
901->1000	100	White	MC612PA	1SNK155102R0000	1	11.00
A (x100)	100	White	MC612PA	1SNK156012R0000	1	11.00
B (x100)	100	White	MC612PA	1SNK156022R0000	1	11.00
C (x100)	100	White	MC612PA	1SNK156032R0000	1	11.00
D (x100)	100	White	MC612PA	1SNK156042R0000	1	11.00
E (x100)	100	White	MC612PA	1SNK156052R0000	1	11.00
F (x100)	100	White	MC612PA	1SNK156062R0000	1	11.00
G (x100)	100	White	MC612PA	1SNK156072R0000	1	11.00
H (x100)	100	White	MC612PA	1SNK156082R0000	1	11.00
I (x100)	100	White	MC612PA	1SNK156092R0000	1	11.00
J (x100)	100	White	MC612PA	1SNK156102R0000	1	11.00
K (x100)	100	White	MC612PA	1SNK156112R0000	1	11.00
L (x100)	100	White	MC612PA	1SNK156122R0000	1	11.00
M (x100)	100	White	MC612PA	1SNK156132R0000	1	11.00
N (x100)	100	White	MC612PA	1SNK156142R0000	1	11.00
O (x100)	100	White	MC612PA	1SNK156152R0000	1	11.00
P (x100)	100	White	MC612PA	1SNK156162R0000	1	11.00
Q (x100)	100	White	MC612PA	1SNK156172R0000	1	11.00
R (x100)	100	White	MC612PA	1SNK156182R0000	1	11.00
S (x100)	100	White	MC612PA	1SNK156192R0000	1	11.00
T (x100)	100	White	MC612PA	1SNK156202R0000	1	11.00
U (x100)	100	White	MC612PA	1SNK156212R0000	1	11.00
V (x100)	100	White	MC612PA	1SNK156222R0000	1	11.00
W (x100)	100	White	MC612PA	1SNK156232R0000	1	11.00
X (x100)	100	White	MC612PA	1SNK156242R0000	1	11.00

Continue on next page →

MC612PA terminal block markers

Pre-printed marker card for vertical terminal block assembly

MC612PA

6 mm 0.236 in spacing

Ordering details

Description	Number of markers per card	Color	Type	Part Number		Pkg card	Weight (1 pce) g
← Continuation of previous page							
Y (x100)	100	White	MC612PA	1SNK156252R0000		1	11.00
Z (x100)	100	White	MC612PA	1SNK156262R0000		1	11.00
0 (x100)	100	White	MC612PA	1SNK157002R0000		1	11.00
1 (x100)	100	White	MC612PA	1SNK157012R0000		1	11.00
2 (x100)	100	White	MC612PA	1SNK157022R0000		1	11.00
3 (x100)	100	White	MC612PA	1SNK157032R0000		1	11.00
4 (x100)	100	White	MC612PA	1SNK157042R0000		1	11.00
5 (x100)	100	White	MC612PA	1SNK157052R0000		1	11.00
6 (x100)	100	White	MC612PA	1SNK157062R0000		1	11.00
7 (x100)	100	White	MC612PA	1SNK157072R0000		1	11.00
8 (x100)	100	White	MC612PA	1SNK157082R0000		1	11.00
9 (x100)	100	White	MC612PA	1SNK157092R0000		1	11.00
+ (x100)	100	White	MC612PA	1SNK158002R0000		1	11.00
- (x100)	100	White	MC612PA	1SNK158012R0000		1	11.00
~ (x100)	100	White	MC612PA	1SNK158022R0000		1	11.00
= (x100)	100	White	MC612PA	1SNK158032R0000		1	11.00
⏚ (x100)	100	White	MC612PA	1SNK158042R0000		1	11.00
L1 (x100)	100	White	MC612PA	1SNK158052R0000		1	11.00
L2 (x100)	100	White	MC612PA	1SNK158062R0000		1	11.00
L3 (x100)	100	White	MC612PA	1SNK158072R0000		1	11.00
PE (x100)	100	White	MC612PA	1SNK158092R0000		1	11.00
U1 (x100)	100	White	MC612PA	1SNK158102R0000		1	11.00
U2 (x100)	100	White	MC612PA	1SNK158112R0000		1	11.00
U3 (x100)	100	White	MC612PA	1SNK158122R0000		1	11.00
V1 (x100)	100	White	MC612PA	1SNK158132R0000		1	11.00
V2 (x100)	100	White	MC612PA	1SNK158142R0000		1	11.00
V3 (x100)	100	White	MC612PA	1SNK158152R0000		1	11.00
W1 (x100)	100	White	MC612PA	1SNK158162R0000		1	11.00
W2 (x100)	100	White	MC612PA	1SNK158172R0000		1	11.00
W3 (x100)	100	White	MC612PA	1SNK158182R0000		1	11.00
+24V (x100)	100	White	MC612PA	1SNK158192R0000		1	11.00
+48V (x100)	100	White	MC612PA	1SNK158202R0000		1	11.00
- 24V (x100)	100	White	MC612PA	1SNK158212R0000		1	11.00
-48V (x100)	100	White	MC612PA	1SNK158222R0000		1	11.00
L1-L2-L3-N-PE (x20)	100	White	MC612PA	1SNK159002R0000		1	11.00
U1-U2-U3-V1-V2-V3-W1-W2-W3 (x10) + U1 (x10)	100	White	MC612PA	1SNK159012R0000		1	11.00

1SNK160008S0201 - Rev. A

MC812

HTP500-V2

MC812 terminal block markers

Description

- MC812 marker card in polycarbonate for high marking quality, durability and speed when marked with the HTP500 printer,
- Excellent marking durability in the most severe environments,
- Improved marking visibility thanks to the increased marking surface +20% (12 mm 0.472 in)

Main technical data

Material	Flammability	Maximum printed digits				Dimensions	
						mm	inches
Polycarbonate	V0	Horizontal	4	Vertical	8	7.6 x 12	0.299 x 0.472

Ordering details

Description	Number of markers per card	Color	Type	Part number		Pkg card	Weight (1 pce) g
Blank card	30	White	MC812	1SNK160000R0000		22	10.00
		Yellow	MC812-YL	1SNK160004R0000		22	10.00

MC812PA

AMS 600

MC812PA terminal block markers

Description

- MC812PA marker card in polyamide to be marked on AMS 600 marking table for medium scale volumes and standard industrial applications,
- Terminal blocks are directly independent after strip mounting,
- Improved marking visibility thanks to the increased marking surface +20% (12 mm 0.472 in)

Main technical data

Material	Flammability	Maximum printed digits				Dimensions	
						mm	inches
Polyamide	V2	Horizontal	3	Vertical	8	7.6 x 12	0.299 x 0.472

Ordering details

Description	Number of markers per card	Color	Type	Part number		Pkg card	Weight (1 pce) g
Blank card	100	White	MC812PA	1SNK169999R0000		20	14.00

Marking systems

Description	Type	Part number		Pkg qty	Weight (1 pce) g
AMS plotter	AMS 600 KIT	1SNA360000R2400		1	12600.00

Marking systems accessories

Description	Type	Part number		Pkg qty	Weight (1 pce) g
Marking support plate for MC PA marker cards (3 MC PA marker cards per plate)	SPRC 30-3	1SNA360039R1700		1	300.00

MC812PA terminal block markers

Pre-printed marker card for horizontal terminal block assembly

MC812PA

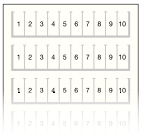

8 mm 0.315 in spacing

Description

Save printing time with our large pre-printed cards offer with pre-printed numbers, letters or symbols.

Main technical data

Material	Flammability	Dimensions mm	Dimensions inches
Polyamide	V2	7.6 x 12	0.299 x 0.472

Ordering details

Description	Number of markers per card	Color	Type	Part Number		Pkg card	Weight (1 pce) g
0->9 (x10)	100	White	MC812PA	1SNK160091R0000		1	14.00
1->10 (x10)	100	White	MC812PA	1SNK160011R0000		1	14.00
11->20 (x10)	100	White	MC812PA	1SNK160021R0000		1	14.00
21->30 (x10)	100	White	MC812PA	1SNK160031R0000		1	14.00
31->40 (x10)	100	White	MC812PA	1SNK160041R0000		1	14.00
41->50 (x10)	100	White	MC812PA	1SNK160051R0000		1	14.00
51->60 (x10)	100	White	MC812PA	1SNK160061R0000		1	14.00
61->70 (x10)	100	White	MC812PA	1SNK160071R0000		1	14.00
71->80 (x10)	100	White	MC812PA	1SNK160081R0000		1	14.00
81->90 (x10)	100	White	MC812PA	1SNK160083R0000		1	14.00
91->100 (x10)	100	White	MC812PA	1SNK160101R0000		1	14.00
101->110 (x10)	100	White	MC812PA	1SNK160111R0000		1	14.00
111->120 (x10)	100	White	MC812PA	1SNK160121R0000		1	14.00
121->130 (x10)	100	White	MC812PA	1SNK160131R0000		1	14.00
131->140 (x10)	100	White	MC812PA	1SNK160141R0000		1	14.00
141->150 (x10)	100	White	MC812PA	1SNK160151R0000		1	14.00
151->160 (x10)	100	White	MC812PA	1SNK160161R0000		1	14.00
161->170 (x10)	100	White	MC812PA	1SNK160171R0000		1	14.00
171->180 (x10)	100	White	MC812PA	1SNK160181R0000		1	14.00
181->190 (x10)	100	White	MC812PA	1SNK160191R0000		1	14.00
191->200 (x10)	100	White	MC812PA	1SNK160201R0000		1	14.00
1->100	100	White	MC812PA	1SNK165011R0000		1	14.00
101->200	100	White	MC812PA	1SNK165021R0000		1	14.00
201->300	100	White	MC812PA	1SNK165031R0000		1	14.00
301->400	100	White	MC812PA	1SNK165041R0000		1	14.00
401->500	100	White	MC812PA	1SNK165051R0000		1	14.00
501->600	100	White	MC812PA	1SNK165061R0000		1	14.00
601->700	100	White	MC812PA	1SNK165071R0000		1	14.00
701->800	100	White	MC812PA	1SNK165081R0000		1	14.00
801->900	100	White	MC812PA	1SNK165091R0000		1	14.00
A (x100)	100	White	MC812PA	1SNK166011R0000		1	14.00
B (x100)	100	White	MC812PA	1SNK166021R0000		1	14.00
C (x100)	100	White	MC812PA	1SNK166031R0000		1	14.00
D (x100)	100	White	MC812PA	1SNK166041R0000		1	14.00
E (x100)	100	White	MC812PA	1SNK166051R0000		1	14.00
F (x100)	100	White	MC812PA	1SNK166061R0000		1	14.00
G (x100)	100	White	MC812PA	1SNK166071R0000		1	14.00
H (x100)	100	White	MC812PA	1SNK166081R0000		1	14.00
I (x100)	100	White	MC812PA	1SNK166091R0000		1	14.00
J (x100)	100	White	MC812PA	1SNK166101R0000		1	14.00
K (x100)	100	White	MC812PA	1SNK166111R0000		1	14.00
L (x100)	100	White	MC812PA	1SNK166121R0000		1	14.00
M (x100)	100	White	MC812PA	1SNK166131R0000		1	14.00
N (x100)	100	White	MC812PA	1SNK166141R0000		1	14.00
O (x100)	100	White	MC812PA	1SNK166151R0000		1	14.00
P (x100)	100	White	MC812PA	1SNK166161R0000		1	14.00
Q (x100)	100	White	MC812PA	1SNK166171R0000		1	14.00
R (x100)	100	White	MC812PA	1SNK166181R0000		1	14.00
S (x100)	100	White	MC812PA	1SNK166191R0000		1	14.00
T (x100)	100	White	MC812PA	1SNK166201R0000		1	14.00
U (x100)	100	White	MC812PA	1SNK166211R0000		1	14.00
V (x100)	100	White	MC812PA	1SNK166221R0000		1	14.00

Continue on next page →

MC812PA terminal block markers

Pre-printed marker card for horizontal terminal block assembly

MC812PA

8 mm 0.315 in spacing

Ordering details

Description	Number of markers per card	Color	Type	Part Number		Pkg card	Weight (1 pce) g
← Continuation of previous page							
W (x100)	100	White ☐	MC812PA	1SNK166231R0000		1	14.00
X (x100)	100	White ☐	MC812PA	1SNK166241R0000		1	14.00
Y (x100)	100	White ☐	MC812PA	1SNK166251R0000		1	14.00
Z (x100)	100	White ☐	MC812PA	1SNK166261R0000		1	14.00
0 (x100)	100	White ☐	MC812PA	1SNK167001R0000		1	14.00
1 (x100)	100	White ☐	MC812PA	1SNK167011R0000		1	14.00
2 (x100)	100	White ☐	MC812PA	1SNK167021R0000		1	14.00
3 (x100)	100	White ☐	MC812PA	1SNK167031R0000		1	14.00
4 (x100)	100	White ☐	MC812PA	1SNK167041R0000		1	14.00
5 (x100)	100	White ☐	MC812PA	1SNK167051R0000		1	14.00
6 (x100)	100	White ☐	MC812PA	1SNK167061R0000		1	14.00
7 (x100)	100	White ☐	MC812PA	1SNK167071R0000		1	14.00
8 (x100)	100	White ☐	MC812PA	1SNK167081R0000		1	14.00
9 (x100)	100	White ☐	MC812PA	1SNK167091R0000		1	14.00
+ (x100)	100	White ☐	MC812PA	1SNK168001R0000		1	14.00
- (x100)	100	White ☐	MC812PA	1SNK168011R0000		1	14.00
~ (x100)	100	White ☐	MC812PA	1SNK168021R0000		1	14.00
= (x100)	100	White ☐	MC812PA	1SNK168031R0000		1	14.00
⏚ (x100)	100	White ☐	MC812PA	1SNK168041R0000		1	14.00
L1 (x100)	100	White ☐	MC812PA	1SNK168051R0000		1	14.00
L2 (x100)	100	White ☐	MC812PA	1SNK168061R0000		1	14.00
L3 (x100)	100	White ☐	MC812PA	1SNK168071R0000		1	14.00
PE (x100)	100	White ☐	MC812PA	1SNK168091R0000		1	14.00
U1 (x100)	100	White ☐	MC812PA	1SNK168101R0000		1	14.00
U2 (x100)	100	White ☐	MC812PA	1SNK168111R0000		1	14.00
U3 (x100)	100	White ☐	MC812PA	1SNK168121R0000		1	14.00
V1 (x100)	100	White ☐	MC812PA	1SNK168131R0000		1	14.00
V2 (x100)	100	White ☐	MC812PA	1SNK168141R0000		1	14.00
V3 (x100)	100	White ☐	MC812PA	1SNK168151R0000		1	14.00
W1 (x100)	100	White ☐	MC812PA	1SNK168161R0000		1	14.00
W2 (x100)	100	White ☐	MC812PA	1SNK168171R0000		1	14.00
W3 (x100)	100	White ☐	MC812PA	1SNK168181R0000		1	14.00
L1-L2-L3-N-PE (x20)	100	White ☐	MC812PA	1SNK169001R0000		1	14.00
U1-U2-U3-V1-V2-V3-W1-W2-W3 (x10) + U1 (x10)	100	White ☐	MC812PA	1SNK169011R0000		1	14.00

MC812PA terminal block markers

Pre-printed marker card for vertical terminal block assembly

MC812PA

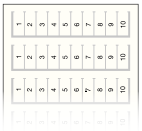

8 mm 0.315 in spacing

Description

Save printing time with our large pre-printed cards offer with pre-printed numbers, letters or symbols.

Main technical data

Material	Flammability	Dimensions mm	Dimensions inches
Polyamide	V2	7.6 x 12	0.299 x 0.472

Ordering details

Description	Number of markers per card	Color	Type	Part Number	Pkg card	Weight (1 pce) g
0->9 (x10)	100	White	MC812PA	1SNK160092R0000	1	14.00
1->10 (x10)	100	White	MC812PA	1SNK160012R0000	1	14.00
11->20 (x10)	100	White	MC812PA	1SNK160022R0000	1	14.00
21->30 (x10)	100	White	MC812PA	1SNK160032R0000	1	14.00
31->40 (x10)	100	White	MC812PA	1SNK160042R0000	1	14.00
41->50 (x10)	100	White	MC812PA	1SNK160052R0000	1	14.00
51->60 (x10)	100	White	MC812PA	1SNK160062R0000	1	14.00
61->70 (x10)	100	White	MC812PA	1SNK160072R0000	1	14.00
71->80 (x10)	100	White	MC812PA	1SNK160082R0000	1	14.00
81->90 (x10)	100	White	MC812PA	1SNK160084R0000	1	14.00
91->100 (x10)	100	White	MC812PA	1SNK160102R0000	1	14.00
101->110 (x10)	100	White	MC812PA	1SNK160112R0000	1	14.00
111->120 (x10)	100	White	MC812PA	1SNK160122R0000	1	14.00
121->130 (x10)	100	White	MC812PA	1SNK160132R0000	1	14.00
131->140 (x10)	100	White	MC812PA	1SNK160142R0000	1	14.00
141->150 (x10)	100	White	MC812PA	1SNK160152R0000	1	14.00
151->160 (x10)	100	White	MC812PA	1SNK160162R0000	1	14.00
161->170 (x10)	100	White	MC812PA	1SNK160172R0000	1	14.00
171->180 (x10)	100	White	MC812PA	1SNK160182R0000	1	14.00
181->190 (x10)	100	White	MC812PA	1SNK160192R0000	1	14.00
191->200 (x10)	100	White	MC812PA	1SNK160202R0000	1	14.00
1->100	100	White	MC812PA	1SNK165012R0000	1	14.00
101->200	100	White	MC812PA	1SNK165022R0000	1	14.00
201->300	100	White	MC812PA	1SNK165032R0000	1	14.00
301->400	100	White	MC812PA	1SNK165042R0000	1	14.00
401->500	100	White	MC812PA	1SNK165052R0000	1	14.00
501->600	100	White	MC812PA	1SNK165062R0000	1	14.00
601->700	100	White	MC812PA	1SNK165072R0000	1	14.00
701->800	100	White	MC812PA	1SNK165082R0000	1	14.00
801->900	100	White	MC812PA	1SNK165092R0000	1	14.00
901->1000	100	White	MC812PA	1SNK165102R0000	1	14.00
A (x100)	100	White	MC812PA	1SNK166012R0000	1	14.00
B (x100)	100	White	MC812PA	1SNK166022R0000	1	14.00
C (x100)	100	White	MC812PA	1SNK166032R0000	1	14.00
D (x100)	100	White	MC812PA	1SNK166042R0000	1	14.00
E (x100)	100	White	MC812PA	1SNK166052R0000	1	14.00
F (x100)	100	White	MC812PA	1SNK166062R0000	1	14.00
G (x100)	100	White	MC812PA	1SNK166072R0000	1	14.00
H (x100)	100	White	MC812PA	1SNK166082R0000	1	14.00
I (x100)	100	White	MC812PA	1SNK166092R0000	1	14.00
J (x100)	100	White	MC812PA	1SNK166102R0000	1	14.00
K (x100)	100	White	MC812PA	1SNK166112R0000	1	14.00
L (x100)	100	White	MC812PA	1SNK166122R0000	1	14.00
M (x100)	100	White	MC812PA	1SNK166132R0000	1	14.00
N (x100)	100	White	MC812PA	1SNK166142R0000	1	14.00
O (x100)	100	White	MC812PA	1SNK166152R0000	1	14.00
P (x100)	100	White	MC812PA	1SNK166162R0000	1	14.00
Q (x100)	100	White	MC812PA	1SNK166172R0000	1	14.00
R (x100)	100	White	MC812PA	1SNK166182R0000	1	14.00
S (x100)	100	White	MC812PA	1SNK166192R0000	1	14.00
T (x100)	100	White	MC812PA	1SNK166202R0000	1	14.00
U (x100)	100	White	MC812PA	1SNK166212R0000	1	14.00
V (x100)	100	White	MC812PA	1SNK166222R0000	1	14.00

Continue on next page →

MC812PA terminal block markers

Pre-printed marker card for vertical terminal block assembly

MC812PA

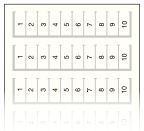

8 mm 0.315 in spacing

Ordering details

Description	Number of markers per card	Color	Type	Part Number		Pkg card	Weight (1 pce) g
← Continuation of previous page							
W (x100)	100	White ☐	MC812PA	1SNK166232R0000		1	14.00
X (x100)	100	White ☐	MC812PA	1SNK166242R0000		1	14.00
Y (x100)	100	White ☐	MC812PA	1SNK166252R0000		1	14.00
Z (x100)	100	White ☐	MC812PA	1SNK166262R0000		1	14.00
0 (x100)	100	White ☐	MC812PA	1SNK167002R0000		1	14.00
1 (x100)	100	White ☐	MC812PA	1SNK167012R0000		1	14.00
2 (x100)	100	White ☐	MC812PA	1SNK167022R0000		1	14.00
3 (x100)	100	White ☐	MC812PA	1SNK167032R0000		1	14.00
4 (x100)	100	White ☐	MC812PA	1SNK167042R0000		1	14.00
5 (x100)	100	White ☐	MC812PA	1SNK167052R0000		1	14.00
6 (x100)	100	White ☐	MC812PA	1SNK167062R0000		1	14.00
7 (x100)	100	White ☐	MC812PA	1SNK167072R0000		1	14.00
8 (x100)	100	White ☐	MC812PA	1SNK167082R0000		1	14.00
9 (x100)	100	White ☐	MC812PA	1SNK167092R0000		1	14.00
+ (x100)	100	White ☐	MC812PA	1SNK168002R0000		1	14.00
- (x100)	100	White ☐	MC812PA	1SNK168012R0000		1	14.00
~ (x100)	100	White ☐	MC812PA	1SNK168022R0000		1	14.00
= (x100)	100	White ☐	MC812PA	1SNK168032R0000		1	14.00
⏚ (x100)	100	White ☐	MC812PA	1SNK168042R0000		1	14.00
L1 (x100)	100	White ☐	MC812PA	1SNK168052R0000		1	14.00
L2 (x100)	100	White ☐	MC812PA	1SNK168062R0000		1	14.00
L3 (x100)	100	White ☐	MC812PA	1SNK168072R0000		1	14.00
PE (x100)	100	White ☐	MC812PA	1SNK168092R0000		1	14.00
U1 (x100)	100	White ☐	MC812PA	1SNK168102R0000		1	14.00
U2 (x100)	100	White ☐	MC812PA	1SNK168112R0000		1	14.00
U3 (x100)	100	White ☐	MC812PA	1SNK168122R0000		1	14.00
V1 (x100)	100	White ☐	MC812PA	1SNK168132R0000		1	14.00
V2 (x100)	100	White ☐	MC812PA	1SNK168142R0000		1	14.00
V3 (x100)	100	White ☐	MC812PA	1SNK168152R0000		1	14.00
W1 (x100)	100	White ☐	MC812PA	1SNK168162R0000		1	14.00
W2 (x100)	100	White ☐	MC812PA	1SNK168172R0000		1	14.00
W3 (x100)	100	White ☐	MC812PA	1SNK168182R0000		1	14.00
+24V (x100)	100	White ☐	MC812PA	1SNK168192R0000		1	14.00
+48V (x100)	100	White ☐	MC812PA	1SNK168202R0000		1	14.00
-24V (x100)	100	White ☐	MC812PA	1SNK168212R0000		1	14.00
-48V (x100)	100	White ☐	MC812PA	1SNK168222R0000		1	14.00
L1-L2-L3-N-PE (x20)	100	White ☐	MC812PA	1SNK169002R0000		1	14.00
U1-U2-U3-V1-V2-V3-W1-W2-W3 (x10) + U1 (x10)	100	White ☐	MC812PA	1SNK169012R0000		1	14.00

5.2 mm 0.205 in spacing

Mounting instructions

Install the UMH on the terminal blocks (strip mounting) and slide on the wire markers.

UMH universal wire markers holder

Description

- Compatible with MG2 - TDMO wire markers and most of the wire markers available on the market (wire markers not supplied with UMH);
- Quickly put it on any SNK terminal blocks and accessories: strip mounting of 10 parts for 5.2 mm 0.205 in spacing, unitary mounting for other spacings.

Ordering details

Description	Color	Type	Part Number		Pkg qty	Weight (1 pce) g
5.2 mm 0.205 in spacing	Grey	UMH	1SNK900611R0000		10	0.20

Main technical data

Material specifications	Insulating material	Polyamide	
	Flammability	V0	
	NF F 16 101	I2F2	
Ambient temperature min/max	Service IEC 60068-2-1	-55 ... +110 °C	-67 ... +230 °F
	Storage	-55 ... +110 °C	-67 ... +230 °F
	Installing	-5 ... +40 °C	-23 ... +104 °F

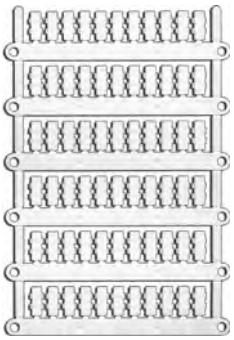

1SNC160118F0014

MG2-TDMO

MG2-TDMO clip-on blank wire marker

Description

- Rigid Polycarbonate marker to be directly printed and snaped on the wire or the UMH wire marker holder,
- Print with support plate MG2-PTM.

Main technical data

Material	Flammability	Temperature range
PC	V0	-40°C ... +140°C, - 22°F ... +176°F

Ordering details

Dimensions mm	Dimensions in	Number of markers per card	Color	Type	Part Number	SW code		Pkg qty	Weight (1 pce) g
MG2-TDMO-01									
4 x 12	0.157 x 0.472	40	White	MG2-TDMO-01 40390	1SNB040390R0412	125		880	0.30
4 x 16	0.157 x 0.630	40	White	MG2-TDMO-01 40391	1SNB040391R0416	128		880	0.30
4 x 12	0.157 x 0.472	40	Yellow	MG2-TDMO-01 40340	1SNB040340R0412	125		800	0.30
4 x 16	0.157 x 0.630	40	Yellow	MG2-TDMO-01 40341	1SNB040341R0416	128		800	0.30
MG2-TDMO-02									
4 x 12	0.157 x 0.472	40	White	MG2-TDMO-02 40490	1SNB040490R0412	126		640	0.40
4 x 16	0.157 x 0.630	40	White	MG2-TDMO-02 40491	1SNB040491R0416	129		640	0.40
4 x 12	0.157 x 0.472	40	Yellow	MG2-TDMO-02 40440	1SNB040440R0412	126		640	0.40
4 x 16	0.157 x 0.630	40	Yellow	MG2-TDMO-02 40441	1SNB040441R0416	129		640	0.40
MG2-TDMO-03									
4 x 12	0.157 x 0.472	40	White	MG2-TDMO-03 40590	1SNB040590R0412	127		560	0.40
4 x 16	0.157 x 0.630	40	White	MG2-TDMO-03 40591	1SNB040591R0416	130		560	0.40
4 x 12	0.157 x 0.472	40	Yellow	MG2-TDMO-03 40540	1SNB040540R0412	127		560	0.40
4 x 16	0.157 x 0.630	40	Yellow	MG2-TDMO-03 40541	1SNB040541R0416	130		560	0.40

Marking system

MG3 KIT	●	AMS 250		AMS 600		HTP500	

Description	Support status	Type	Part Number			Pkg qty	Weight (1 pce) g
Support plate							
Support plate for cable tags MG2-TDMO & MG-TDM 4x16mm	Purchased separately	MG2-PTM 991010	1SNB991010R0000			1	116.00

MG3 KIT

MG-TAR

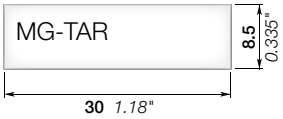

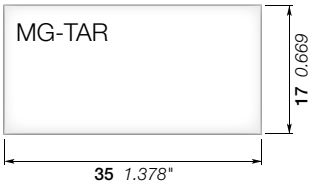

MG-TAR markers for components

Description

Identify your terminal blocks assembly with the precut blank label adapted to the LH label holders.

Ordering details

Description	Nb. of markers per card	Nb. of card by package	Color	Type	Part Number	SW code		Pkg marker	Weight 1 marker g
For LH label holder	33	50	White	MG-TAR 45490	1SNB045490R8530	720		1650	0.371
For LH-R1 label holder	18	50		MG-TAR 45194	1SNB045194R1735	711		900	0.628

Main technical data

Material specifications	Insulating material	Rigid PVC	
	Flammability	V0	
	NF F 16 101		
Ambient temperature min/max	Service IEC 60068-2-1	-30 ... +80 °C	-22 ... +176 °F
	Storage	-30 ... +80 °C	-22 ... +176 °F
	Installing	+10 ... +40 °C	+50 ... +104 °F

MG-TAA

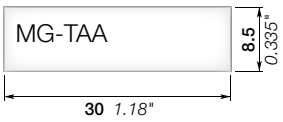

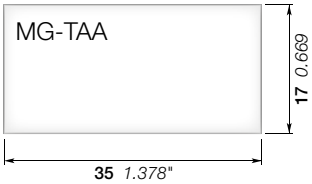

MG-TAA markers for components

Description

Identify your terminal blocks assembly with the self adhesive label adapted to the LH label holders.

Ordering details

Description	Nb. of markers per card	Nb. of card by package	Color	Type	Part Number	SW code		Pkg marker	Weight 1 marker g
For LH label holder	33	25	White	MG-TAA 49498	1SNB049498R8530	33		825	0.55
	33	25	Yellow	MG-TAA 49448	1SNB049448R8530	33		825	0.55
For LH-R1 label holder	18	25	White	MG-TAA 49198	1SNB049198R1735	711		450	0.91
	18	25	Yellow	MG-TAA 49148	1SNB049148R1735	711		450	0.91

Main technical data

Material specifications	Insulating material	Rigid PVC	
	Flammability	V0	
	NF F 16 101		
Ambient temperature min/max	Service IEC 60068-2-1	-30 ... +80 °C	-22 ... +176 °F
	Storage	-30 ... +80 °C	-22 ... +176 °F
	Installing	+10 ... +40 °C	+50 ... +104 °F

Marking system & accessories

Description	Color	Type	Part Number		Pkg qty	Weight (1 pce) g
Thermal transfer printer	Grey	MG3 KIT	1SNB419001R0000		1	12600

1SNK160099S0201

MG-TAPW

MG-TAPW markers for components

Description

Identify your terminal blocks assembly with the precut blank label adapted to the LH label holders.

Ordering details

Description	Nb. of markers per card	Nb. of card by package	Color	Type	Part Number	SW code		Pkg marker	Weight 1 marker g
For LH label holder	30	50	White	MG-TAPW 49096	1SNB049096R0929	363		1500	0.30
	30	50	Yellow	MG-TAPW 49046	1SNB049046R0929	363		1500	0.30

Main technical data

Material specifications	Insulating material	Rigid PVC	
	Flammability	V0	
	NF F 16 101		
Ambient temperature min/max	Service IEC 60068-2-1	-30 ... +80 °C	-22 ... +176 °F
	Storage	-30 ... +80 °C	-22 ... +176 °F
	Installing	+10 ... +40 °C	+50 ... +104 °F

Marking system & accessories

Description	Color	Type	Part Number		Pkg qty	Weight (1 pce) g
Thermal transfer printer	Grey	MG3 KIT	1SNB419001R0000		1	12600

1SNK160100S0201

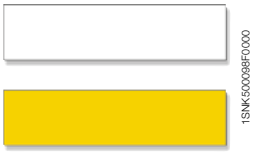

MCLH

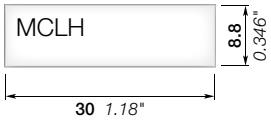

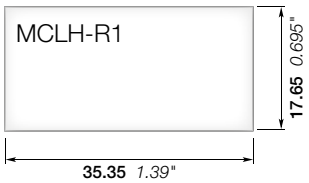

MCLH label

Description

Identify your terminal blocks assembly with the self adhesive label adapted to the LH label holders.

Ordering details

Description	Nb. of markers per card	Nb. of card by package	Color	Type	Part Number	SW code		Pkg card	Weight 1 card g
For LH label holder	36	25	White	MCLH	1SNK900630R0000			25	10.00
			Yellow	MCLH-YL	1SNK900633R0000			25	10.00
For LH-R1 label holder	15	25	White	MCLH-R1	1SNK900631R0000			25	10.00
			Yellow	MCLH-R1-YL	1SNK900634R0000			25	10.00

Main technical data

Material specifications	Insulating material	PVC + adhesive acrylic	
	Flammability	V0	
	NF F 16 101		
Ambient temperature min/max	Service IEC 60068-2-1	-55 ... +110 °C	-67 ... +230 °F
	Storage	-55 ... +110 °C	-67 ... +230 °F
	Installing	-5 ... +40 °C	+23 ... +104 °F

1

2

Marking system & accessories

Description	Color	Type	Part Number		Pkg qty	Weight (1 pce) g
1 Plotter		AMS 600 KIT	1SNA360000R2400		1	12600.00
2 Support plate for AMS		SPRC 21	1SNA360031R0600		1	851.00

Complete list of accessories is indicated in the terminal block datasheet including end stops.
Some accessories such as jumper bars may modify the terminal block's ratings: Complete information available in the accessories section of the catalog.

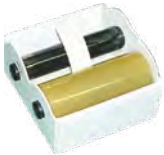

HTP500-CLEAN

HTP500-FEED

HTP500-PL2

RIB-B

Feeders and support plates

Description	Color	Type	Part Number		Pkg qty	Weight (1 pce) g
Universal feeder for marker cards		HTP500-FEED	1SNA235703R0400		1	
Support plate for TE Connectivity terminal block markers		HTP500-PL2	1SNA235705R0600		1	
Universal support plate for wire markers		HTP500-PL	1SNA235704R0500		1	

Accessories

Description	Color	Type	Part Number		Pkg qty	Weight (1 pce) g
Black ribbon cassette		RIB-B	1SNA235710R0600		3	
Red ribbon cassette for identification plates and adhesive labels		RIB-R	1SNA235711R2300		3	
Red ribbon cassette for terminal blocks and wire markers		RIB-RS	1SNA235718R0200		3	
Cleaning cassette		HTP500-CLEAN	1SNA235714R2600		1	
Standard cleaning roll ø18		HTP500-ROLL	1SNA235715R2700		1	
Printing head		HTP500-PRINT	1SNA235716R2000		1	
Dust cover for HTP500 and AMS 600 systems		DUST COVER	1SNA360161R1500		1	
Wooden box for HTP500-V2 KIT		HTP500-WB	1SNA235717R2100		1	
Software CD		HTS500	1SNA235702R0300		1	
Support table		HTP500-BAS	1SNA235706R0700		1	
Power supply cable		HTP500-PW	1SNA235709R1200		1	

1SNK160015S0201 - Rev. A

MG3 thermal transfer printer
Kit and accessories

MG3 KIT

Description

- Versatile,
- Compact and robust,
- Easy to install and use.

Ordering details

Description	Color	Type	Part Number		Pkg pce	Weight (1 pce) g
MG3 Thermal transfer printer KIT		MG3 KIT	1SNB419001R0000		1	12600.00
List of items included in the KIT:						
1 MG3 Thermal transfer printer		MG3				
1 Software CD		MG3 SOFTWARE				
1 Power supply cable		MG3 POWER				
1 USB cable		MG3 USB				
1 Protective cover		MG2 COVE 991680				
1 Ribbon take up spool		MG2-CRB 991654				
1 Black monochrome ribbon		MG2-ETR 991600				
1 Support plate for cable tags MG-TPM		MG2-PWC 991000				
1 Support plate for labels, cables, plates and various markers		MG2-PLT 991002				
1 Support plate for terminal block markers MG-CPM-01(5x10 and 5x15),02,03,04,07		MG2-QTB 991011				
1 Support plate for SNK series terminal block markers (MG-CPM-13)		MG2-ETB 991016				

Support plate MG2-...

Support plates

Description	Color	Type	Part Number		Pkg pce	Weight (1 pce) g
Support template for:						
Cable tags MG-TPM		MG2-PWC 991000	1SNB991000R0000		1	148.00
Labels, cable tags, plates and various markers		MG2-PLT 991002	1SNB991002R0000		1	148.00
Terminal block markers MG-CPM-05,12		MG2-WTB 991004	1SNB991004R0000		1	151.00
Terminal block markers MG-CPM-06		MG2-STB 991005	1SNB991005R0000		1	158.00
Terminal block markers MG-CPM-10		MG2-CTB 991006	1SNB991006R0000		1	156.00
Cable tags MG-TDM (4x12 mm)		MG2-PTD 991007	1SNB991007R0000		1	126.00
Terminal block markers MG-CPM-01 (5x7 mm)		MG2-MTB 991008	1SNB991008R0000		1	149.00
Cable tags MG2-TDMO and MG-TDM (4x16 mm)		MG2-PTM 991010	1SNB991010R0000		1	116.00
Terminal block markers MG-CPM-01 (5x10 and 5x15 mm),02,03,04,07		MG2-QTB 991011	1SNB991011R0000		1	120.00
Terminal block markers TE Connectivity RC and MC series		MG2-ABM 991012	1SNB991012R0000		1	146.00
Terminal block markers MG-CPM-09		MG2-LTB 991013	1SNB991013R0000		1	128.00
Terminal block markers SNK series MG-CPM-13		MG2-ETB 991016	1SNB991016R0000		1	100.00

PET blank cover for support plate

Description	Color	Type	Part Number		Pkg pce	Weight (1 pce) g
PET blank for support plate MG2-PWC		MG2-TWC 991502	1SNB991502R0000		3	16.70
PET blank for support plate MG2-PLT		MG2-TLT 991522	1SNB991522R0000		3	14.70
PET blank for support plate MG2-PTD		MG2-TTD 991563	1SNB991563R0000		3	11.70
PET blank for support plate MG2-MTB		MG2-TMT 991513	1SNB991513R0000		3	12.00
PET blank for support plate MG2-WTB		MG2-TWT 991542	1SNB991542R0000		3	12.00
PET blank for support plate MG2-STB		MG2-TST 991552	1SNB991552R0000		3	21.50
PET blank for support plate MG2-CTB		MG2-TCT 991562	1SNB991562R0000		3	12.00
PET blank for support plate MG2-QTB		MG2-TGT 991532	1SNB991532R0000		3	11.70
PET blank for support plate MG2-ETB		MG2-TTB 991512	1SNB991512R0000		3	10.70

Ribbons MG2-ETR...

Accessories

Description	Color	Type	Part Number		Pkg pce	Weight (1 pce) g
Print head cleaning kit		MG2-CKP 991670	1SNB991670R0000		1	336.00
Black monochrome ribbon	Black	MG2-ETR 991600	1SNB991600R0000		1	227.00
Blue monochrome ribbon	Blue	MG2-ETR 991601	1SNB991601R0000		1	229.00
Red monochrome ribbon	Red	MG2-ETR 991602	1SNB991602R0000		1	255.00
Green monochrome ribbon	Green	MG2-ETR 991603	1SNB991603R0000		1	247.00
White monochrome ribbon	White	MG2-ETR 991606	1SNB991606R0000		1	333.00

1SNC160112S0201 - Rev. A

AMS 600

AMS 600

Description

- For basic marking applications,
- Economic,
- Full-size format,
- Print original manufacturers' markers.

Ordering details

Description	Color	Type	Part Number		Pkg pce	Weight (1 pce) g
AMS 600 Plotter KIT		AMS 600 KIT	1SNA360000R2400		1	12600
List of items included in the KIT:						
1 AMS 600 plotter pen printer		AMS 600				
1 Software CD		AMS SOFTWARE				
1 Power supply cable		AMS POWER				
1 USB cable		AMS USB				
1 Support plate for RC / MC / RCTT / WMTT / BA4 / RCT		SPRC1				
1 Support plate for MC...PA		SPRC 30-3				
1 Plotter pen Ø 0.25 mm .01 in		AMS PEN 0.25				
1 Plotter pen Ø 0.35 mm .014 in		AMS PEN 0.35				
5 Ink cartridges		AMS INK CARTRIDGES				
1 Cleaner fluid		AMS CLEANER FLUID				
1 Cleaner kit		AMS CLEANER KIT				

AMS 250

AMS 250

Description

- Basic needs,
- Economic,
- Half-size format
- Compatible with most of AMS 600 accessories.

Ordering details

Description	Color	Type	Part Number		Pkg pce	Weight (1 pce) g
AMS 250 Plotter KIT		AMS 250 BASIC KIT	1SNA360000R2500		1	8800
List of items included in the KIT:						
1 AMS 250 plotter pen printer		AMS 250 BASIC				
1 Software CD		AMS SOFTWARE				
1 Power supply cable		AMS POWER				
1 USB cable		AMS USB				
1 Support plate for BA4 / MC / RC / RCAL / RCT / RCTT		SPRC2				
1 Disposable plotter pen Ø 0.25 mm .01 in EDR ink		DISPOSABLE AMS PEN ED-R 0.25				
1 Disposable plotter pen Ø 0.35 mm .014 in EDR ink		DISPOSABLE AMS PEN ED-R 0.35				

1SNC160110S0201

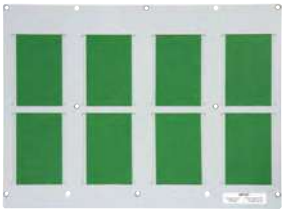

SPRC1

SPRC2

SPRC30-3

AMS PEN

AMS CLEANER KIT

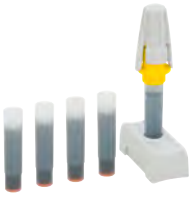

AMS INK CARTRIDGES

Support plates for TE Connectivity markers

Description	Compatibility AMS 500 AMS 600	Compatibility AMS 250	Type	Part Number		Pkg pce	Weight (1 pce) g
Support plates for:							
RC/MC/RCTT/WMTT/BA4/RCT full format	●		SPRC 1	1SNA360010R1500		1	1500.00
RC/MC/RCTT/WMTT/BA4/RCT		●	SPRC 2	1SNA360011R1500		1	600.00
RB strips	●	●	SPRC 4	1SNA360014R0500		1	300.00
RTM7-9	●		SPRC 5	1SNA360015R0600		1	1700.00
PIB	●	●	SPRC 13	1SNA360023R0600		1	260.00
BA5-50	●	●	SPRC 14	1SNA360024R0700		1	300.00
RC-X10A	●	●	SPRC 15	1SNA360025R0000		1	300.00
2 RC cards	●	●	SPRC 16	1SNA360026R0100		1	300.00
WM markers	●	●	SPRC 26	1SNA360036R0300		1	300.00
PAM strip	●		SPRC 27	1SNA360037R0400		1	300.00
RPCV markers	●	●	SPRC 28	1SNA360040R2300		1	300.00
RCL, P, W510	●	●	SPRC 29	1SNA360038R1500		1	300.00
MC... PA	●	●	SPRC 30-3	1SNA360039R1700		1	500.00
A4 universal support plate	●	●	SPRC 21	1SNA360031R0600		1	500.00

Support plates for other manufacturers

Description	Compatibility AMS 500 AMS 600	Compatibility AMS 250	Type	Part Number		Pkg pce	Weight (1 pce) g
Support plates for markers:							
Wieland	●	●	SPRC 6	1SNA360016R0700		1	350.00
Weidmüller	●	●	SPRC 7	1SNA360017R0000		1	400.00
Phoenix ZBM 5/6	●	●	SPRC 8	1SNA360018R1100		1	300.00
Phoenix ZB	●	●	SPRC 9	1SNA360019R1200		1	300.00
Allen Bradley WRZ	●	●	SPRC 10	1SNA360020R1700		1	330.00
Wago mini WSB5	●	●	SPRC 11	1SNA360021R0400		1	300.00

Accessories

Description		Diameter Color	Type	Part Number		Pkg pce	Weight (1 pce) g
Plotter pen P 2.0 black ink	Ø 0.18 mm 0.007 in	Red	AMS PEN 0.18	1SNA360103R1400		1	15.00
	Ø 0.25 mm 0.01 in	White	AMS PEN 0.25	1SNA360100R2500		1	15.00
	Ø 0.35 mm 0.014 in	Yellow	AMS PEN 0.35	1SNA360101R1200		1	15.00
	Ø 0.50 mm 0.02 in	Brown	AMS PEN 0.50	1SNA360104R1500		1	26.00
	Ø 0.70 mm 0.028 in	Blue	AMS PEN 0.70	1SNA360105R1600		1	26.00
	Ø 1.00 mm 0.039 in	Orange	AMS PEN 1.00	1SNA360106R1700		1	26.00
Disposable plotter pen P 2.0 black ink	Ø 0.25 mm 0.01 in	White	DISPOSABLE AMS PEN 0.25	1SNA360120R1000		1	24.00
	Ø 0.35 mm 0.014 in	Yellow	DISPOSABLE AMS PEN 0.35	1SNA360121R0500		1	24.00
Disposable plotter pen ED-R black ink	Ø 0.18 mm 0.007 in	Red	DISPOSABLE AMS PEN ED-R 0.18	1SNA360124R1000		1	24.00
	Ø 0.25 mm 0.01 in	White	DISPOSABLE AMS PEN ED-R 0.25	1SNA360122R1000		1	24.00
	Ø 0.35 mm 0.014 in	Yellow	DISPOSABLE AMS PEN ED-R 0.35	1SNA360123R0500		1	24.00
5 ink cartridges 1 ml			AMS INK CARTRIDGES	1SNA360150R2600		1	18.00
2 cleaner fluid bottles, 2x10 ml			AMS CLEANER FLUID	1SNA360155R1700		1	40.00
Cleaner kit including: 1 rinse bottle and 1 blotting paper			AMS CLEANER KIT	1SNA360156R1000		1	34.00
Dust cover			DUST COVER	1SNA360161R1500		1	200.00
Service kit for pen maintenance			SERVICE KIT FOR AMS 600	1SNA360162R1600		1	12.00
Self-adhesive support for support plate SPRC 1			SPDST1	1SNA360163R1700		1	70.00
Plotter head for AMS 600 including 1 printing module, 1 pen holder and 1 dust cover			PEN HOLDER	1SNA360098R1200		1	85.00

Index
Part Number classification

Part Number	Type	Page
1SNA113542R1000	PC5-2	105
1SNA113544R1200	PC5-10	105
1SNA116538R1700	PC8-2	226
1SNA116539R1000	PC8-3	226
1SNA116540R2500	PC8-4	226
1SNA163313R2400	PC8-10	155
1SNA164800R0300	PR3.G2	197
1SNA168500R1200	PR4	198
1SNA168672R1100	TGA8	120
1SNA168673R1200	TGA8	120
1SNA168674R1300	TGA8	120
1SNA168675R1400	ANT	120
1SNA168700R2200	PR5	198
1SNA173220R0500	PR30	196
1SNA173523R1100	PC81-10	120
1SNA174300R1700	PR3.Z2	196
1SNA178430R0500	RCPEB	201
1SNA178431R2200	EPR1	201
1SNA178529R0400	PR50	197
1SNA179371R1600	CN5	120
1SNA179726R0200	AJS9	152
1SNA206053R0700	BJMI31.2	91
1SNA206054R0000	BJMI31.3	91
1SNA206126R2500	BJMI36.2	92
1SNA206223R0600	BJMI36.3	92
1SNA206680R1500	AJS9-BK	154
1SNA206681R0200	AJS9-GN	154
1SNA206682R0300	AJS9-GR	154
1SNA206683R0400	AJS9-BL	154
1SNA206720R1400	AJS9-RD	154
1SNA206721R0100	AL4-M3	152
1SNA206765R0000	AJS9-WH	154
1SNA206772R0000	AJS9-PR	154
1SNA206782R0000	AJS9-BR	154
1SNA235106R2600	PAM43020	230
1SNA235155R2600	PIB2-TT	201
1SNA235157R2000	PIB2-TT-YL	201
1SNA235158R0100	RCPEAD-TT	201
1SNA235159R0200	RCPEAD-TT-YL	201
1SNA235702R0300	HTS500	265
1SNA235703R0400	HTP500-FEED	265
1SNA235704R0500	HTP500-PL	265
1SNA235705R0600	HTP500-PL2	265
1SNA235706R0700	HTP500-BAS	265
1SNA235709R1200	HTP500-PW	265
1SNA235710R0600	RIB-B	265
1SNA235711R2300	RIB-R	265
1SNA235714R2600	HTP500-CLEAN	265
1SNA235715R2700	HTP500-ROLL	265
1SNA235716R2000	HTP500-PRINT	265
1SNA235717R2100	HTP500-WB	265
1SNA235718R0200	RIB-RS	265
1SNA238000R1600	RC1010	91
1SNA360000R2400	AMS 600 KIT	245
1SNA360000R2500	AMS 250 BASIC KIT	267
1SNA360010R1500	SPRC 1	268
1SNA360011R1500	SPRC 2	268
1SNA360014R0500	SPRC 4	268
1SNA360015R0600	SPRC 5	268
1SNA360016R0700	SPRC 6	268
1SNA360017R0000	SPRC 7	268
1SNA360018R1100	SPRC 8	268
1SNA360019R1200	SPRC 9	268
1SNA360020R1700	SPRC 10	268
1SNA360021R0400	SPRC 11	268
1SNA360023R0600	SPRC 13	268
1SNA360024R0700	SPRC 14	268
1SNA360025R0000	SPRC 15	268
1SNA360026R0100	SPRC 16	268
1SNA360031R0600	SPRC 21	264
1SNA360036R0300	SPRC 26	268
1SNA360037R0400	SPRC 27	268
1SNA360038R1500	SPRC 29	268
1SNA360039R1700	SPRC 30-3	245
1SNA360040R2300	SPRC 28	268
1SNA360098R1200	PEN HOLDER	268
1SNA360100R2500	AMS PEN 0.25	268
1SNA360101R1200	AMS PEN 0.35	268
1SNA360103R1400	AMS PEN 0.18	268
1SNA360104R1500	AMS PEN 0.50	268
1SNA360105R1600	AMS PEN 0.70	268
1SNA360106R1700	AMS PEN 1.00	268
1SNA360120R1000	DISPOSABLE AMS PEN 0.25	268
1SNA360121R0500	DISPOSABLE AMS PEN 0.35	268
1SNA360122R1000	DISPOSABLE AMS PEN ED-R 0.25	268
1SNA360123R0500	DISPOSABLE AMS PEN ED-R 0.35	268
1SNA360124R1000	DISPOSABLE AMS PEN ED-R 0.18	268
1SNA360150R2600	AMS INK CARTRIDGES	268
1SNA360155R1700	AMS CLEANER FLUID	268
1SNA360156R1000	AMS CLEANER KIT	268
1SNA360161R1500	DUST COVER	265
1SNA360162R1600	SERVICE KIT FOR AMS 500	268
1SNA360163R1700	SPDST1	268
1SNA399726R0700	EPR2	201
1SNA399787R0500	CPBP2	92
1SNA399788R1600	CPBP1	91
1SNA400711R0600	PC8-R1	153
1SNA400712R0700	PC8-R2	155
1SNA400713R0000	PC8-R3	155
1SNA400724R0300	PC8-R4	155
1SNA400842R0000	PC8-R5	155
1SNA400843R0000	PC8-R6	155
1SNA400849R0000	PC8-R7	155
1SNA400850R0000	PC8-R8	155
1SNB040340R0412	MG2-TDMO-01 40340	261
1SNB040341R0416	MG2-TDMO-01 40341	261
1SNB040390R0412	MG2-TDMO-01 40390	261
1SNB040391R0416	MG2-TDMO-01 40391	261
1SNB040440R0412	MG2-TDMO-02 40440	261
1SNB040441R0416	MG2-TDMO-02 40441	261
1SNB040490R0412	MG2-TDMO-02 40490	261
1SNB040491R0416	MG2-TDMO-02 40491	261
1SNB040540R0412	MG2-TDMO-03 40540	261
1SNB040541R0416	MG2-TDMO-03 40541	261
1SNB040590R0412	MG2-TDMO-03 40590	261
1SNB040591R0416	MG2-TDMO-03 40591	261
1SNB041740R0512	MG-CPM 13 41740	244
1SNB041741R0612	MG-CPM 13 41741	250
1SNB041790R0512	MG-CPM 13 41790	21
1SNB041791R0612	MG-CPM 13 41791	30
1SNB043196R0012	MG-CPMFA 43196	185
1SNB045194R1735	MG-TAR 45194	201
1SNB045490R8530	MG-TAR 45490	201
1SNB046415R0615	MG-VYT 46415	217
1SNB046915R0615	MG-VYT 46915	217
1SNB049046R0929	MG-TAPW 49046	263
1SNB049096R0929	MG-TAPW 49096	263
1SNB049148R1735	MG-TAA 49148	201
1SNB049198R1735	MG-TAA 49198	201
1SNB049448R8530	MG-TAA 49448	201
1SNB049498R8530	MG-TAA 49498	201
1SNB419001R0000	MG3 KIT	244
1SNB991000R0000	MG2-PWC 991000	266
1SNB991002R0000	MG2-PLT 991002	266
1SNB991004R0000	MG2-WTB 991004	266
1SNB991005R0000	MG2-STB 991005	266
1SNB991006R0000	MG2-CTB 991006	266
1SNB991007R0000	MG2-PTD 991007	266
1SNB991008R0000	MG2-MTB 991008	266
1SNB991010R0000	MG2-PTM 991010	261
1SNB991011R0000	MG2-QTB 991011	266
1SNB991012R0000	MG2-ABM 991012	266
1SNB991013R0000	MG2-LTB 991013	266
1SNB991016R0000	MG2-ETB 991016	244
1SNB991502R0000	MG2-TWC 991502	266
1SNB991512R0000	MG2-TTB 991512	266
1SNB991513R0000	MG2-TMT 991513	266
1SNB991522R0000	MG2-TLT 991522	266
1SNB991532R0000	MG2-TGT 991532	266
1SNB991542R0000	MG2-TWT 991542	266
1SNB991552R0000	MG2-TST 991552	266
1SNB991562R0000	MG2-TCT 991562	266
1SNB991563R0000	MG2-TTD 991563	266
1SNB991600R0000	MG2-ETR 991600	266
1SNB991601R0000	MG2-ETR 991601	266
1SNB991602R0000	MG2-ETR 991602	266
1SNB991603R0000	MG2-ETR 991603	266
1SNB991606R0000	MG2-ETR 991606	266
1SNB991670R0000	MG2-CKP 991670	266
1SNK140000R0000	MC512	21
1SNK140004R0000	MC512-YL	244
1SNK140011R0000	MC512PA	246
1SNK140012R0000	MC512PA	248
1SNK140021R0000	MC512PA	246
1SNK140022R0000	MC512PA	248
1SNK140031R0000	MC512PA	246
1SNK140032R0000	MC512PA	248
1SNK140041R0000	MC512PA	246
1SNK140042R0000	MC512PA	248
1SNK140051R0000	MC512PA	246
1SNK140052R0000	MC512PA	248
1SNK140061R0000	MC512PA	246
1SNK140062R0000	MC512PA	248
1SNK140071R0000	MC512PA	246
1SNK140072R0000	MC512PA	248
1SNK140081R0000	MC512PA	246
1SNK140082R0000	MC512PA	248
1SNK140083R0000	MC512PA	246
1SNK140084R0000	MC512PA	248
1SNK140091R0000	MC512PA	246
1SNK140092R0000	MC512PA	248
1SNK140101R0000	MC512PA	246
1SNK140102R0000	MC512PA	248
1SNK140111R0000	MC512PA	246
1SNK140112R0000	MC512PA	248
1SNK140121R0000	MC512PA	246
1SNK140122R0000	MC512PA	248
1SNK140131R0000	MC512PA	246
1SNK140132R0000	MC512PA	248
1SNK140141R0000	MC512PA	246
1SNK140142R0000	MC512PA	248
1SNK140151R0000	MC512PA	246
1SNK140152R0000	MC512PA	248
1SNK140161R0000	MC512PA	246
1SNK140162R0000	MC512PA	248
1SNK140171R0000	MC512PA	246
1SNK140172R0000	MC512PA	248
1SNK140181R0000	MC512PA	246
1SNK140182R0000	MC512PA	248
1SNK140191R0000	MC512PA	246
1SNK140192R0000	MC512PA	248
1SNK140201R0000	MC512PA	246
1SNK140202R0000	MC512PA	248
1SNK145011R0000	MC512PA	246
1SNK145012R0000	MC512PA	248
1SNK145021R0000	MC512PA	246
1SNK145022R0000	MC512PA	248
1SNK145031R0000	MC512PA	246
1SNK145032R0000	MC512PA	248
1SNK145041R0000	MC512PA	246
1SNK145042R0000	MC512PA	248
1SNK145051R0000	MC512PA	246
1SNK145052R0000	MC512PA	248
1SNK145061R0000	MC512PA	246
1SNK145062R0000	MC512PA	248
1SNK145071R0000	MC512PA	246
1SNK145072R0000	MC512PA	248
1SNK145081R0000	MC512PA	246
1SNK145082R0000	MC512PA	248
1SNK145091R0000	MC512PA	246
1SNK145092R0000	MC512PA	248
1SNK145102R0000	MC512PA	248
1SNK146011R0000	MC512PA	246
1SNK146012R0000	MC512PA	248
1SNK146021R0000	MC512PA	246
1SNK146022R0000	MC512PA	248
1SNK146031R0000	MC512PA	246
1SNK146032R0000	MC512PA	248
1SNK146041R0000	MC512PA	246
1SNK146042R0000	MC512PA	248
1SNK146051R0000	MC512PA	246
1SNK146052R0000	MC512PA	248
1SNK146061R0000	MC512PA	246
1SNK146062R0000	MC512PA	248
1SNK146071R0000	MC512PA	246
1SNK146072R0000	MC512PA	248
1SNK146081R0000	MC512PA	246
1SNK146082R0000	MC512PA	248
1SNK146091R0000	MC512PA	246
1SNK146092R0000	MC512PA	248
1SNK146101R0000	MC512PA	246
1SNK146102R0000	MC512PA	248
1SNK146111R0000	MC512PA	246
1SNK146112R0000	MC512PA	248
1SNK146121R0000	MC512PA	246
1SNK146122R0000	MC512PA	248
1SNK146131R0000	MC512PA	246
1SNK146132R0000	MC512PA	248
1SNK146141R0000	MC512PA	246
1SNK146142R0000	MC512PA	248
1SNK146151R0000	MC512PA	246
1SNK146152R0000	MC512PA	248
1SNK146161R0000	MC512PA	246
1SNK146162R0000	MC512PA	248
1SNK146171R0000	MC512PA	246
1SNK146172R0000	MC512PA	248
1SNK146181R0000	MC512PA	246
1SNK146182R0000	MC512PA	248
1SNK146191R0000	MC512PA	246
1SNK146192R0000	MC512PA	248
1SNK146201R0000	MC512PA	246
1SNK146202R0000	MC512PA	248
1SNK146211R0000	MC512PA	246
1SNK146212R0000	MC512PA	248
1SNK146221R0000	MC512PA	246
1SNK146222R0000	MC512PA	248
1SNK146231R0000	MC512PA	246

Index

Part Number classification

Part Number	Type	Page
1SNK146232R0000	MC512PA	249
1SNK146241R0000	MC512PA	246
1SNK146242R0000	MC512PA	249
1SNK146251R0000	MC512PA	246
1SNK146252R0000	MC512PA	249
1SNK146261R0000	MC512PA	247
1SNK146262R0000	MC512PA	249
1SNK147001R0000	MC512PA	247
1SNK147002R0000	MC512PA	249
1SNK147011R0000	MC512PA	247
1SNK147012R0000	MC512PA	249
1SNK147021R0000	MC512PA	247
1SNK147022R0000	MC512PA	249
1SNK147031R0000	MC512PA	247
1SNK147032R0000	MC512PA	249
1SNK147041R0000	MC512PA	247
1SNK147042R0000	MC512PA	249
1SNK147051R0000	MC512PA	247
1SNK147052R0000	MC512PA	249
1SNK147061R0000	MC512PA	247
1SNK147062R0000	MC512PA	249
1SNK147071R0000	MC512PA	247
1SNK147072R0000	MC512PA	249
1SNK147081R0000	MC512PA	247
1SNK147082R0000	MC512PA	249
1SNK147091R0000	MC512PA	247
1SNK147092R0000	MC512PA	249
1SNK148001R0000	MC512PA	247
1SNK148002R0000	MC512PA	249
1SNK148011R0000	MC512PA	247
1SNK148012R0000	MC512PA	249
1SNK148021R0000	MC512PA	247
1SNK148022R0000	MC512PA	249
1SNK148031R0000	MC512PA	247
1SNK148032R0000	MC512PA	249
1SNK148041R0000	MC512PA	247
1SNK148042R0000	MC512PA	249
1SNK148051R0000	MC512PA	247
1SNK148052R0000	MC512PA	249
1SNK148061R0000	MC512PA	247
1SNK148062R0000	MC512PA	249
1SNK148071R0000	MC512PA	247
1SNK148072R0000	MC512PA	249
1SNK148091R0000	MC512PA	247
1SNK148092R0000	MC512PA	249
1SNK148101R0000	MC512PA	247
1SNK148102R0000	MC512PA	249
1SNK148111R0000	MC512PA	247
1SNK148112R0000	MC512PA	249
1SNK148121R0000	MC512PA	247
1SNK148122R0000	MC512PA	249
1SNK148131R0000	MC512PA	247
1SNK148132R0000	MC512PA	249
1SNK148141R0000	MC512PA	247
1SNK148142R0000	MC512PA	249
1SNK148151R0000	MC512PA	247
1SNK148152R0000	MC512PA	249
1SNK148161R0000	MC512PA	247
1SNK148162R0000	MC512PA	249
1SNK148171R0000	MC512PA	247
1SNK148172R0000	MC512PA	249
1SNK148181R0000	MC512PA	247
1SNK148182R0000	MC512PA	249
1SNK148192R0000	MC512PA	249
1SNK148202R0000	MC512PA	249
1SNK148212R0000	MC512PA	249
1SNK148222R0000	MC512PA	249
1SNK149001R0000	MC512PA	247
1SNK149002R0000	MC512PA	249
1SNK149011R0000	MC512PA	247
1SNK149012R0000	MC512PA	249
1SNK149999R0000	MC512PA	21
1SNK150000R0000	MC612	24
1SNK150004R0000	MC612-YL	250
1SNK150011R0000	MC612PA	252
1SNK150012R0000	MC612PA	254
1SNK150021R0000	MC612PA	252
1SNK150022R0000	MC612PA	254
1SNK150031R0000	MC612PA	252
1SNK150032R0000	MC612PA	254
1SNK150041R0000	MC612PA	252
1SNK150042R0000	MC612PA	254
1SNK150051R0000	MC612PA	252
1SNK150052R0000	MC612PA	254
1SNK150061R0000	MC612PA	252
1SNK150062R0000	MC612PA	254
1SNK150071R0000	MC612PA	252
1SNK150072R0000	MC612PA	254
1SNK150081R0000	MC612PA	252
1SNK150082R0000	MC612PA	254
1SNK150083R0000	MC612PA	252
1SNK150084R0000	MC612PA	254
1SNK150091R0000	MC612PA	252
1SNK150092R0000	MC612PA	254
1SNK150101R0000	MC612PA	252
1SNK150102R0000	MC612PA	254
1SNK150111R0000	MC612PA	252
1SNK150112R0000	MC612PA	254
1SNK150121R0000	MC612PA	252
1SNK150122R0000	MC612PA	254
1SNK150131R0000	MC612PA	252
1SNK150132R0000	MC612PA	254
1SNK150141R0000	MC612PA	252
1SNK150142R0000	MC612PA	254
1SNK150151R0000	MC612PA	252
1SNK150152R0000	MC612PA	254
1SNK150161R0000	MC612PA	252
1SNK150162R0000	MC612PA	254
1SNK150171R0000	MC612PA	252
1SNK150172R0000	MC612PA	254
1SNK150181R0000	MC612PA	252
1SNK150182R0000	MC612PA	254
1SNK150191R0000	MC612PA	252
1SNK150192R0000	MC612PA	254
1SNK150201R0000	MC612PA	252
1SNK150202R0000	MC612PA	254
1SNK155011R0000	MC612PA	252
1SNK155012R0000	MC612PA	254
1SNK155021R0000	MC612PA	252
1SNK155022R0000	MC612PA	254
1SNK155031R0000	MC612PA	252
1SNK155032R0000	MC612PA	254
1SNK155041R0000	MC612PA	252
1SNK155042R0000	MC612PA	254
1SNK155051R0000	MC612PA	252
1SNK155052R0000	MC612PA	254
1SNK155061R0000	MC612PA	252
1SNK155062R0000	MC612PA	254
1SNK155071R0000	MC612PA	252
1SNK155072R0000	MC612PA	254
1SNK155081R0000	MC612PA	252
1SNK155082R0000	MC612PA	254
1SNK155091R0000	MC612PA	252
1SNK155092R0000	MC612PA	254
1SNK155102R0000	MC612PA	254
1SNK156011R0000	MC612PA	252
1SNK156012R0000	MC612PA	254
1SNK156021R0000	MC612PA	252
1SNK156022R0000	MC612PA	254
1SNK156031R0000	MC612PA	252
1SNK156032R0000	MC612PA	254
1SNK156041R0000	MC612PA	252
1SNK156042R0000	MC612PA	254
1SNK156051R0000	MC612PA	252
1SNK156052R0000	MC612PA	254
1SNK156061R0000	MC612PA	252
1SNK156062R0000	MC612PA	254
1SNK156071R0000	MC612PA	252
1SNK156072R0000	MC612PA	254
1SNK156081R0000	MC612PA	252
1SNK156082R0000	MC612PA	254
1SNK156091R0000	MC612PA	252
1SNK156092R0000	MC612PA	254
1SNK156101R0000	MC612PA	252
1SNK156102R0000	MC612PA	254
1SNK156111R0000	MC612PA	252
1SNK156112R0000	MC612PA	254
1SNK156121R0000	MC612PA	252
1SNK156122R0000	MC612PA	254
1SNK156131R0000	MC612PA	252
1SNK156132R0000	MC612PA	254
1SNK156141R0000	MC612PA	252
1SNK156142R0000	MC612PA	254
1SNK156151R0000	MC612PA	252
1SNK156152R0000	MC612PA	254
1SNK156161R0000	MC612PA	252
1SNK156162R0000	MC612PA	254
1SNK156171R0000	MC612PA	252
1SNK156172R0000	MC612PA	254
1SNK156181R0000	MC612PA	252
1SNK156182R0000	MC612PA	254
1SNK156191R0000	MC612PA	252
1SNK156192R0000	MC612PA	254
1SNK156201R0000	MC612PA	252
1SNK156202R0000	MC612PA	254
1SNK156211R0000	MC612PA	252
1SNK156212R0000	MC612PA	254
1SNK156221R0000	MC612PA	252
1SNK156222R0000	MC612PA	254
1SNK156231R0000	MC612PA	252
1SNK156232R0000	MC612PA	254
1SNK156241R0000	MC612PA	253
1SNK156242R0000	MC612PA	254
1SNK156251R0000	MC612PA	253
1SNK156252R0000	MC612PA	255
1SNK156261R0000	MC612PA	253
1SNK156262R0000	MC612PA	255
1SNK157001R0000	MC612PA	253
1SNK157002R0000	MC612PA	255
1SNK157011R0000	MC612PA	253
1SNK157012R0000	MC612PA	255
1SNK157021R0000	MC612PA	253
1SNK157022R0000	MC612PA	255
1SNK157031R0000	MC612PA	253
1SNK157032R0000	MC612PA	255
1SNK157041R0000	MC612PA	253
1SNK157042R0000	MC612PA	255
1SNK157051R0000	MC612PA	253
1SNK157052R0000	MC612PA	255
1SNK157061R0000	MC612PA	253
1SNK157062R0000	MC612PA	255
1SNK157071R0000	MC612PA	253
1SNK157072R0000	MC612PA	255
1SNK157081R0000	MC612PA	253
1SNK157082R0000	MC612PA	255
1SNK157091R0000	MC612PA	253
1SNK157092R0000	MC612PA	255
1SNK158001R0000	MC612PA	253
1SNK158002R0000	MC612PA	255
1SNK158011R0000	MC612PA	253
1SNK158012R0000	MC612PA	255
1SNK158021R0000	MC612PA	253
1SNK158022R0000	MC612PA	255
1SNK158031R0000	MC612PA	253
1SNK158032R0000	MC612PA	255
1SNK158041R0000	MC612PA	253
1SNK158042R0000	MC612PA	255
1SNK158051R0000	MC612PA	253
1SNK158052R0000	MC612PA	255
1SNK158061R0000	MC612PA	253
1SNK158062R0000	MC612PA	255
1SNK158071R0000	MC612PA	253
1SNK158072R0000	MC612PA	255
1SNK158091R0000	MC612PA	253
1SNK158092R0000	MC612PA	255
1SNK158101R0000	MC612PA	253
1SNK158102R0000	MC612PA	255
1SNK158111R0000	MC612PA	253
1SNK158112R0000	MC612PA	255
1SNK158121R0000	MC612PA	253
1SNK158122R0000	MC612PA	255
1SNK158131R0000	MC612PA	253
1SNK158132R0000	MC612PA	255
1SNK158141R0000	MC612PA	253
1SNK158142R0000	MC612PA	255
1SNK158151R0000	MC612PA	253
1SNK158152R0000	MC612PA	255
1SNK158161R0000	MC612PA	253
1SNK158162R0000	MC612PA	255
1SNK158171R0000	MC612PA	253
1SNK158172R0000	MC612PA	255
1SNK158181R0000	MC612PA	253
1SNK158182R0000	MC612PA	255
1SNK158192R0000	MC612PA	255
1SNK158202R0000	MC612PA	255
1SNK158212R0000	MC612PA	255
1SNK158222R0000	MC612PA	255
1SNK159001R0000	MC612PA	253
1SNK159002R0000	MC612PA	255
1SNK159011R0000	MC612PA	253
1SNK159012R0000	MC612PA	255
1SNK159999R0000	MC612PA	24
1SNK160000R0000	MC812	30
1SNK160004R0000	MC812-YL	256
1SNK160011R0000	MC812PA	257
1SNK160012R0000	MC812PA	259
1SNK160021R0000	MC812PA	257
1SNK160022R0000	MC812PA	259
1SNK160031R0000	MC812PA	257
1SNK160032R0000	MC812PA	259
1SNK160041R0000	MC812PA	257
1SNK160042R0000	MC812PA	259
1SNK160051R0000	MC812PA	257
1SNK160052R0000	MC812PA	259
1SNK160061R0000	MC812PA	257
1SNK160062R0000	MC812PA	259
1SNK160071R0000	MC812PA	257

Index
Part Number classification

Part Number	Type	Page
1SNK160072R0000	MC812PA	259
1SNK160081R0000	MC812PA	257
1SNK160082R0000	MC812PA	259
1SNK160083R0000	MC812PA	257
1SNK160084R0000	MC812PA	259
1SNK160091R0000	MC812PA	257
1SNK160092R0000	MC812PA	259
1SNK160101R0000	MC812PA	257
1SNK160102R0000	MC812PA	259
1SNK160111R0000	MC812PA	257
1SNK160112R0000	MC812PA	259
1SNK160121R0000	MC812PA	257
1SNK160122R0000	MC812PA	259
1SNK160131R0000	MC812PA	257
1SNK160132R0000	MC812PA	259
1SNK160141R0000	MC812PA	257
1SNK160142R0000	MC812PA	259
1SNK160151R0000	MC812PA	257
1SNK160152R0000	MC812PA	259
1SNK160161R0000	MC812PA	257
1SNK160162R0000	MC812PA	259
1SNK160171R0000	MC812PA	257
1SNK160172R0000	MC812PA	259
1SNK160181R0000	MC812PA	257
1SNK160182R0000	MC812PA	259
1SNK160191R0000	MC812PA	257
1SNK160192R0000	MC812PA	259
1SNK160201R0000	MC812PA	257
1SNK160202R0000	MC812PA	259
1SNK165011R0000	MC812PA	257
1SNK165012R0000	MC812PA	259
1SNK165021R0000	MC812PA	257
1SNK165022R0000	MC812PA	259
1SNK165031R0000	MC812PA	257
1SNK165032R0000	MC812PA	259
1SNK165041R0000	MC812PA	257
1SNK165042R0000	MC812PA	259
1SNK165051R0000	MC812PA	257
1SNK165052R0000	MC812PA	259
1SNK165061R0000	MC812PA	257
1SNK165062R0000	MC812PA	259
1SNK165071R0000	MC812PA	257
1SNK165072R0000	MC812PA	259
1SNK165081R0000	MC812PA	257
1SNK165082R0000	MC812PA	259
1SNK165091R0000	MC812PA	257
1SNK165092R0000	MC812PA	259
1SNK165102R0000	MC812PA	259
1SNK166011R0000	MC812PA	257
1SNK166012R0000	MC812PA	259
1SNK166021R0000	MC812PA	257
1SNK166022R0000	MC812PA	259
1SNK166031R0000	MC812PA	257
1SNK166032R0000	MC812PA	259
1SNK166041R0000	MC812PA	257
1SNK166042R0000	MC812PA	259
1SNK166051R0000	MC812PA	257
1SNK166052R0000	MC812PA	259
1SNK166061R0000	MC812PA	257
1SNK166062R0000	MC812PA	259
1SNK166071R0000	MC812PA	257
1SNK166072R0000	MC812PA	259
1SNK166081R0000	MC812PA	257
1SNK166082R0000	MC812PA	259
1SNK166091R0000	MC812PA	257
1SNK166092R0000	MC812PA	259
1SNK166101R0000	MC812PA	257
1SNK166102R0000	MC812PA	259
1SNK166111R0000	MC812PA	257
1SNK166112R0000	MC812PA	259
1SNK166121R0000	MC812PA	257
1SNK166122R0000	MC812PA	259
1SNK166131R0000	MC812PA	257
1SNK166132R0000	MC812PA	259
1SNK166141R0000	MC812PA	257
1SNK166142R0000	MC812PA	259
1SNK166151R0000	MC812PA	257
1SNK166152R0000	MC812PA	259
1SNK166161R0000	MC812PA	257
1SNK166162R0000	MC812PA	259
1SNK166171R0000	MC812PA	257
1SNK166172R0000	MC812PA	259
1SNK166181R0000	MC812PA	257
1SNK166182R0000	MC812PA	259
1SNK166191R0000	MC812PA	257
1SNK166192R0000	MC812PA	259
1SNK166201R0000	MC812PA	257
1SNK166202R0000	MC812PA	259
1SNK166211R0000	MC812PA	257
1SNK166212R0000	MC812PA	259
1SNK166221R0000	MC812PA	257
1SNK166222R0000	MC812PA	259
1SNK166231R0000	MC812PA	258
1SNK166232R0000	MC812PA	260
1SNK166241R0000	MC812PA	258
1SNK166242R0000	MC812PA	260
1SNK166251R0000	MC812PA	258
1SNK166252R0000	MC812PA	260
1SNK166261R0000	MC812PA	258
1SNK166262R0000	MC812PA	260
1SNK167001R0000	MC812PA	258
1SNK167002R0000	MC812PA	260
1SNK167011R0000	MC812PA	258
1SNK167012R0000	MC812PA	260
1SNK167021R0000	MC812PA	258
1SNK167022R0000	MC812PA	260
1SNK167031R0000	MC812PA	258
1SNK167032R0000	MC812PA	260
1SNK167041R0000	MC812PA	258
1SNK167042R0000	MC812PA	260
1SNK167051R0000	MC812PA	258
1SNK167052R0000	MC812PA	260
1SNK167061R0000	MC812PA	258
1SNK167062R0000	MC812PA	260
1SNK167071R0000	MC812PA	258
1SNK167072R0000	MC812PA	260
1SNK167081R0000	MC812PA	258
1SNK167082R0000	MC812PA	260
1SNK167091R0000	MC812PA	258
1SNK167092R0000	MC812PA	260
1SNK168001R0000	MC812PA	258
1SNK168002R0000	MC812PA	260
1SNK168011R0000	MC812PA	258
1SNK168012R0000	MC812PA	260
1SNK168021R0000	MC812PA	258
1SNK168022R0000	MC812PA	260
1SNK168031R0000	MC812PA	258
1SNK168032R0000	MC812PA	260
1SNK168041R0000	MC812PA	258
1SNK168042R0000	MC812PA	260
1SNK168051R0000	MC812PA	258
1SNK168052R0000	MC812PA	260
1SNK168061R0000	MC812PA	258
1SNK168062R0000	MC812PA	260
1SNK168071R0000	MC812PA	258
1SNK168072R0000	MC812PA	260
1SNK168091R0000	MC812PA	258
1SNK168092R0000	MC812PA	260
1SNK168101R0000	MC812PA	258
1SNK168102R0000	MC812PA	260
1SNK168111R0000	MC812PA	258
1SNK168112R0000	MC812PA	260
1SNK168121R0000	MC812PA	258
1SNK168122R0000	MC812PA	260
1SNK168131R0000	MC812PA	258
1SNK168132R0000	MC812PA	260
1SNK168141R0000	MC812PA	258
1SNK168142R0000	MC812PA	260
1SNK168151R0000	MC812PA	258
1SNK168152R0000	MC812PA	260
1SNK168161R0000	MC812PA	258
1SNK168162R0000	MC812PA	260
1SNK168171R0000	MC812PA	258
1SNK168172R0000	MC812PA	260
1SNK168181R0000	MC812PA	258
1SNK168182R0000	MC812PA	260
1SNK168192R0000	MC812PA	260
1SNK168202R0000	MC812PA	260
1SNK168212R0000	MC812PA	260
1SNK168222R0000	MC812PA	260
1SNK169001R0000	MC812PA	258
1SNK169002R0000	MC812PA	260
1SNK169011R0000	MC812PA	258
1SNK169012R0000	MC812PA	260
1SNK169999R0000	MC812PA	30
1SNK505010R0000	ZS4	80
1SNK505020R0000	ZS4-BL	80
1SNK505030R0000	ZS4-OR	80
1SNK505060R0000	ZS4-YL	80
1SNK505061R0000	ZS4-GN	80
1SNK505062R0000	ZS4-RD	80
1SNK505063R0000	ZS4-PR	80
1SNK505064R0000	ZS4-BR	80
1SNK505065R0000	ZS4-WH	80
1SNK505066R0000	ZS4-BK	80
1SNK505150R0000	ZS4-PE	80
1SNK505210R0000	ZS4-D2	136
1SNK505211R0000	ZS4-D1	137
1SNK505212R0000	ZS4-T3	146
1SNK505214R0000	ZS4-D-CH-UD	148
1SNK505215R0000	ZS4-D-CH-DU	149
1SNK505220R0000	ZS4-D2-BL	136
1SNK505230R0000	ZS4-D2-OR	136
1SNK505310R0000	ZS4-S	105
1SNK505311R0000	ZS4-S-T2	106
1SNK505312R0000	ZS4-S-T2.3	106
1SNK505313R0000	ZS4-SP	112
1SNK505314R0000	ZS4-SP-T2	113
1SNK505315R0000	ZS4-D2-S	142
1SNK505316R0000	ZS4-D2-S-T2	143
1SNK505320R0000	ZS4-S-BL	105
1SNK505321R0000	ZS4-S-T2-BL	106
1SNK505330R0000	ZS4-S-OR	105
1SNK505331R0000	ZS4-S-T2-OR	106
1SNK505910R0000	ES4	80
1SNK505911R0000	ES6-4S	83
1SNK505912R0000	ES6-3S	82
1SNK505960R0000	ES4-D2	136
1SNK505961R0000	ES4-T3	146
1SNK506010R0000	ZS6	81
1SNK506011R0000	ZS6-3S	82
1SNK506012R0000	ZS6-4S	83
1SNK506013R0000	ZS4-R2	130
1SNK506020R0000	ZS6-BL	81
1SNK506021R0000	ZS6-3S-BL	82
1SNK506022R0000	ZS6-4S-BL	83
1SNK506030R0000	ZS6-OR	81
1SNK506060R0000	ZS6-YL	81
1SNK506061R0000	ZS6-GN	81
1SNK506062R0000	ZS6-RD	81
1SNK506063R0000	ZS6-PR	81
1SNK506064R0000	ZS6-BR	81
1SNK506065R0000	ZS6-WH	81
1SNK506066R0000	ZS6-BK	81
1SNK506067R0000	ZS6-3S-YL	82
1SNK506068R0000	ZS6-4S-YL	83
1SNK506150R0000	ZS6-PE	81
1SNK506151R0000	ZS6-3S-PE	82
1SNK506152R0000	ZS6-4S-PE	83
1SNK506153R0000	ZS4-PE-R2	131
1SNK506210R0000	ZS6-D2	138
1SNK506211R0000	ZS6-D1	139
1SNK506212R0000	ZS6-D2-PE	140
1SNK506213R0000	ZS4-T3-R1	147
1SNK506214R0000	ZS6-D1-RD	139
1SNK506220R0000	ZS6-D2-BL	138
1SNK506230R0000	ZS6-D2-OR	138
1SNK506250R0000	ZS6-D1-PE	138
1SNK506260R0000	ZS6-D2-YL	138
1SNK506262R0000	ZS6-D2-RD	138
1SNK506265R0000	ZS6-D2-WH	138
1SNK506266R0000	ZS6-D2-BK	138
1SNK506310R0000	ZS4-S-R1	107
1SNK506311R0000	ZS4-S-T2-R1	108
1SNK506312R0000	ZS4-S-T2.3-R1	108
1SNK506313R0000	ZS4-SP-R1	114
1SNK506314R0000	ZS4-SP-T2-R1	115
1SNK506315R0000	ZS6-S	109
1SNK506316R0000	ZS6-S-4S-T2	110
1SNK506320R0000	ZS4-S-R1-BL	107
1SNK506321R0000	ZS4-S-T2-R1-BL	108
1SNK506322R0000	ZS6-S-BL	109
1SNK506330R0000	ZS4-S-R1-OR	107
1SNK506331R0000	ZS4-S-T2-R1-OR	108
1SNK506410R0000	ZS4-SF	126
1SNK506411R0000	ZS4-SF-T2	127
1SNK506412R0000	ZS4-SF-R1	128
1SNK506413R0000	ZS4-SF-R2	129
1SNK506414R0000	ZS4-S-R2	132
1SNK506415R0000	ZS4-SF-R3	128
1SNK506416R0000	ZS4-SF-R4	129
1SNK508010R0000	ZS10	84
1SNK508011R0000	ZS10-R1	152
1SNK508013R0000	ZS4-R1	124
1SNK508020R0000	ZS10-BL	84
1SNK508030R0000	ZS10-OR	84
1SNK508060R0000	ZS10-YL	84
1SNK508061R0000	ZS10-GN	84
1SNK508062R0000	ZS10-RD	84
1SNK508063R0000	ZS10-PR	84
1SNK508064R0000	ZS10-BR	84
1SNK508065R0000	ZS10-WH	84
1SNK508066R0000	ZS10-BK	84
1SNK508150R0000	ZS10-PE	84
1SNK508151R0000	ZS10-PE-R1	153
1SNK508310R0000	ZS10-ST	154
1SNK508311R0000	ZS10-ST-T4	152

Index

Part Number classification

Part Number	Type	Page
1SNK508312R0000	ZS10-ST-1	152
1SNK508315R0000	ZS10-S	111
1SNK508316R0000	ZS10-SP	116
1SNK508320R0000	ZS10-S-BL	111
1SNK508410R0000	ZS4-SF1	120
1SNK508411R0000	ZS4-SF1-T2	121
1SNK508412R0000	ZS4-SF1-R1	122
1SNK508413R0000	ZS4-SF1-R2	123
1SNK508414R0000	ZS4-SF1-R3	122
1SNK508415R0000	ZS4-SF1-R4	123
1SNK508416R0000	ZS4-S-R3	125
1SNK508417R0000	ZS10-S-R2	135
1SNK508418R0000	ZS10-SF	133
1SNK508419R0000	ZS4-S-R3-T2	125
1SNK508421R0000	ZS10-SF-R1	134
1SNK508422R0000	ZS10-SF-R3	134
1SNK508423R0000	ZS4-D2-SF1-R1	145
1SNK508424R0000	ZS4-D2-SF1-R3	145
1SNK508425R0000	ZS4-D2-SF1	144
1SNK508430R0000	ZS4-SF1-OR	120
1SNK508910R0000	ES10-ST	152
1SNK508911R0000	ES4-D2-SF1	144
1SNK508960R0000	ES4-SF	120
1SNK510010R0000	ZS16	85
1SNK510020R0000	ZS16-BL	85
1SNK510030R0000	ZS16-OR	85
1SNK510150R0000	ZS16-PE	85
1SNK512010R0000	ZS25	86
1SNK512020R0000	ZS25-BL	86
1SNK512060R0000	ZS25-YL	86
1SNK512150R0000	ZS25-PE	86
1SNK516010R0000	ZS35	87
1SNK516011R0000	ZS50	88
1SNK516020R0000	ZS35-BL	87
1SNK516021R0000	ZS50-BL	88
1SNK516030R0000	ZS35-OR	87
1SNK516060R0000	ZS50-YL	88
1SNK516063R0000	ZS50-RD	88
1SNK516064R0000	ZS50-BK	88
1SNK516150R0000	ZS35-PE	87
1SNK516151R0000	ZS50-PE	88
1SNK516170R0000	ZS35-PEN	101
1SNK522010R0000	ZS70	89
1SNK522020R0000	ZS70-BL	89
1SNK522060R0000	ZS70-YL	89
1SNK522150R0000	ZS70-PE	89
1SNK526010R0000	ZS95	90
1SNK526020R0000	ZS95-BL	90
1SNK526060R0000	ZS95-YL	90
1SNK526150R0000	ZS95-PE	90
1SNK531010R0000	ZS150	91
1SNK531020R0000	ZS150-BL	91
1SNK531060R0000	ZS150-YL	91
1SNK536010R0000	ZS240	92
1SNK536020R0000	ZS240-BL	92
1SNK536060R0000	ZS240-YL	92
1SNK705010R0000	ZK2.5	21
1SNK705011R0000	ZK2.5-3P	22
1SNK705012R0000	ZK2.5-4P	23
1SNK705020R0000	ZK2.5-BL	21
1SNK705021R0000	ZK2.5-3P-BL	22
1SNK705022R0000	ZK2.5-4P-BL	23
1SNK705030R0000	ZK2.5-OR	21
1SNK705031R0000	ZK2.5-3P-OR	22
1SNK705032R0000	ZK2.5-4P-OR	23
1SNK705060R0000	ZK2.5-YL	21
1SNK705061R0000	ZK2.5-GN	21
1SNK705062R0000	ZK2.5-RD	21
1SNK705065R0000	ZK2.5-WH	21
1SNK705066R0000	ZK2.5-BK	21
1SNK705067R0000	ZK2.5-3P-YL	22
1SNK705068R0000	ZK2.5-3P-GN	22
1SNK705069R0000	ZK2.5-3P-RD	22
1SNK705072R0000	ZK2.5-3P-WH	22
1SNK705073R0000	ZK2.5-3P-BK	22
1SNK705074R0000	ZK2.5-4P-YL	23
1SNK705075R0000	ZK2.5-4P-GN	23
1SNK705076R0000	ZK2.5-4P-RD	23
1SNK705079R0000	ZK2.5-4P-WH	23
1SNK705080R0000	ZK2.5-4P-BK	23
1SNK705150R0000	ZK2.5-PE	21
1SNK705151R0000	ZK2.5-PE-3P	22
1SNK705152R0000	ZK2.5-PE-4P	23
1SNK705210R0000	ZK2.5-D2	56
1SNK705211R0000	ZK2.5-D1	57
1SNK705212R0000	ZK2.5-D2-PE	58
1SNK705213R0000	ZK2.5-D-CH-UD	67
1SNK705214R0000	ZK2.5-D-CH-DU	68
1SNK705219R0000	ZK2.5-D-CH2-DU-RL	69
1SNK705220R0000	ZK2.5-D2-BL	56
1SNK705250R0000	ZK2.5-D1-PE	56
1SNK705310R0000	ZK2.5-S	49
1SNK705311R0000	ZK2.5-SP	52
1SNK705312R0000	ZK2.5-S-4P	50
1SNK705313R0000	ZK2.5-SP-4P	53
1SNK705320R0000	ZK2.5-S-BL	49
1SNK705321R0000	ZK2.5-S-4P-BL	50
1SNK705330R0000	ZK2.5-S-OR	49
1SNK705331R0000	ZK2.5-S-4P-OR	50
1SNK705510R0000	ZK2.5-T3	60
1SNK705511R0000	ZK2.5-T1	61
1SNK705512R0000	ZK2.5-L-L-PE	62
1SNK705513R0000	ZK2.5-L-N-PE	63
1SNK705550R0000	ZK2.5-T1-PE	60
1SNK705710R0000	ZK2.5-CH-4P-LR	65
1SNK705711R0000	ZK2.5-CH-4P-RL	66
1SNK705910R0000	EK2.5	21
1SNK705911R0000	EK2.5-3P	22
1SNK705912R0000	EK2.5-4P	23
1SNK705913R0000	EK2.5-S-4P	50
1SNK705960R0000	EK2.5-D2	56
1SNK705961R0000	EK2.5-T3	60
1SNK706010R0000	ZK4	24
1SNK706011R0000	ZK4-3P	25
1SNK706012R0000	ZK4-4P	26
1SNK706020R0000	ZK4-BL	24
1SNK706021R0000	ZK4-3P-BL	25
1SNK706022R0000	ZK4-4P-BL	26
1SNK706030R0000	ZK4-OR	24
1SNK706031R0000	ZK4-3P-OR	25
1SNK706032R0000	ZK4-4P-OR	26
1SNK706060R0000	ZK4-YL	24
1SNK706062R0000	ZK4-RD	24
1SNK706066R0000	ZK4-BK	24
1SNK706150R0000	ZK4-PE	24
1SNK706151R0000	ZK4-PE-3P	25
1SNK706152R0000	ZK4-PE-4P	26
1SNK706310R0000	ZK2.5-S-R1	51
1SNK706410R0000	ZK2.5-SF	51
1SNK706411R0000	ZK2.5-SF-R1	55
1SNK706412R0000	ZK2.5-SF-R3	55
1SNK708010R0000	ZK6	27
1SNK708011R0000	ZK6-3P	28
1SNK708020R0000	ZK6-BL	27
1SNK708021R0000	ZK6-3P-BL	28
1SNK708030R0000	ZK6-OR	27
1SNK708031R0000	ZK6-3P-OR	28
1SNK708060R0000	ZK6-YL	27
1SNK708062R0000	ZK6-RD	27
1SNK708066R0000	ZK6-BK	27
1SNK708150R0000	ZK6-PE	27
1SNK708151R0000	ZK6-PE-3P	28
1SNK708911R0000	EK6-3P	28
1SNK710010R0000	ZK10	29
1SNK710011R0000	ZK10-3P	31
1SNK710020R0000	ZK10-BL	29
1SNK710021R0000	ZK10-3P-BL	31
1SNK710030R0000	ZK10-OR	29
1SNK710063R0000	ZK10-PV	30
1SNK710064R0000	ZK10-3P-PV	32
1SNK710065R0000	ZK10-PV-BL	30
1SNK710067R0000	ZK10-3P-PV-BL	32
1SNK710150R0000	ZK10-PE	30
1SNK710151R0000	ZK10-PE-3P	32
1SNK710910R0000	EK10	29
1SNK710911R0000	EK10-3P	31
1SNK712010R0000	ZK16	33
1SNK712011R0000	ZK16-3P	35
1SNK712020R0000	ZK16-BL	33
1SNK712021R0000	ZK16-3P-BL	35
1SNK712063R0000	ZK16-PV	34
1SNK712064R0000	ZK16-3P-PV	36
1SNK712065R0000	ZK16-PV-BL	34
1SNK712067R0000	ZK16-3P-PV-BL	36
1SNK712150R0000	ZK16-PE	34
1SNK712151R0000	ZK16-PE-3P	36
1SNK805010R0000	ZDK2.5-22	177
1SNK805013R0000	ZDS4-22	190
1SNK805014R0000	ZDK2.5-21	176
1SNK805015R0000	ZDK2.5-11	175
1SNK805016R0000	ZD2.5-11	172
1SNK805017R0000	ZD2.5-22	173
1SNK805020R0000	ZDK2.5-22-BL	177
1SNK805025R0000	ZDK2.5-11-BL	175
1SNK805150R0000	ZDK2.5-11-PE	179
1SNK805152R0000	ZDK2.5-22-PE	180
1SNK805156R0000	ZD2.5-22-PE	174
1SNK805212R0000	ZDK2.5-D2-PE	183
1SNK805213R0000	ZDK2.5-D2	181
1SNK805214R0000	ZDK2.5-D1	182
1SNK805223R0000	ZDK2.5-D2-BL	181
1SNK805250R0000	ZDK2.5-D1-PE	184
1SNK805712R0000	CDK2.5	172
1SNK805713R0000	CDK2.5-E	172
1SNK805714R0000	CDS4	190
1SNK805715R0000	CDS4-E	190
1SNK805738R0000	CDK2.5-J	186
1SNK805739R0000	CDK2.5-J-E	186
1SNK805740R0000	CDK2.5-2P-J	187
1SNK805741R0000	CDK2.5-2P-J-E	187
1SNK805742R0000	CDK2.5-BL	175
1SNK805743R0000	CDK2.5-BL-E	175
1SNK805744R0000	CDK2.5-J-BL	186
1SNK805745R0000	CDK2.5-J-BL-E	186
1SNK805746R0000	CDK2.5-2P-J-BL	187
1SNK805747R0000	CDK2.5-2P-J-BL-E	187
1SNK805748R0000	CDK2.5-J-PE	186
1SNK805749R0000	CDK2.5-J-PE-E	186
1SNK805750R0000	CDK2.5-PE	174
1SNK805751R0000	CDK2.5-2P-J-PE	187
1SNK805752R0000	CDK2.5-2P-J-PE-E	187
1SNK805753R0000	CDK2.5-PE-E	174
1SNK805910R0000	EDK2.5-22	177
1SNK805911R0000	EDS4-22	190
1SNK805913R0000	EDK2.5-D	181
1SNK805914R0000	EDK2.5-21	176
1SNK805915R0000	EDK2.5-11	172
1SNK805917R0000	ED2.5-22	173
1SNK806010R0000	ZDK4-22	178
1SNK806013R0000	ZDS4-22-R1	192
1SNK806712R0000	CDK4	178
1SNK806713R0000	CDK4-E	178
1SNK806714R0000	CDS4-R1	192
1SNK900001R0000	BAM4	80
1SNK900002R0000	BAZ1	30
1SNK900101R0000	CS	80
1SNK900102R0000	BAZH1	56
1SNK900103R0000	CS-R1	80
1SNK900104R0000	ES-TC8	27
1SNK900105R0000	ES-TC6	24
1SNK900106R0000	CS-R2	21
1SNK900107R0000	CS-R3	30
1SNK900200R0000	TC5	21
1SNK900201R0000	TC5-R1	21
1SNK900203R0000	TP2	30
1SNK900205R0000	TP4	30
1SNK900401R0000	PG5	52
1SNK900402R0000	PG5-R1	52
1SNK900403R0000	PG5-R2	211
1SNK900600R0000	SHBS	80
1SNK900601R0000	SHBP	21
1SNK900602R0000	SHB	56
1SNK900603R0000	JB85-3	21
1SNK900604R0000	CO	155
1SNK900605R0000	LH	199
1SNK900606R0000	LH-J	56
1SNK900607R0000	LH-R1	199
1SNK900611R0000	UMH	30
1SNK900618R0000	PL5	80
1SNK900619R0000	PL6	81
1SNK900620R0000	PL8	84
1SNK900621R0000	PL10	85
1SNK900622R0000	PL16	87
1SNK900624R0000	KCO	155
1SNK900625R0000	PT-3	210
1SNK900627R0000	RILS	219
1SNK900630R0000	MCLH	201
1SNK900631R0000	MCLH-R1	201
1SNK900633R0000	MCLH-YL	201
1SNK900634R0000	MCLH-R1-YL	201
1SNK900636R0000	COP-ZD	172
1SNK900637R0000	VR-ZD	185
1SNK900640R0000	TO3.5-50	213
1SNK900641R0000	TO4-100	213
1SNK900642R0000	TO5.5-125	213
1SNK900643R0000	TO6.5-150	213
1SNK900644R0000	TO3.5-100-INS	213
1SNK900650R0000	PS-3	213
1SNK900652R0000	SC-JB8-2	152
1SNK900653R0000	SC-JB8-3	156
1SNK900654R0000	SC-JB8-4	156
1SNK900655R0000	SC-JB8-5	231
1SNK900657R0000	SC-JB8-3-OR	231
1SNK900658R0000	SC-JB8-4-OR	231
1SNK900659R0000	TO3.5-50-A	213
1SNK900660R0000	PT-ZD	185
1SNK905302R0000	JB5-2	21

Index
Part Number classification

Part Number	Type	Page
1SNK905303R0000	JB5-3	21
1SNK905304R0000	JB5-4	21
1SNK905305R0000	JB5-5	21
1SNK905310R0000	JB5-10	21
1SNK905350R0000	JB5-50	21
1SNK906302R0000	JB6-2	24
1SNK906303R0000	JB6-3	24
1SNK906304R0000	JB6-4	24
1SNK906305R0000	JB6-5	24
1SNK906310R0000	JB6-10	24
1SNK906350R0000	JB6-50	24
1SNK908302R0000	JB8-2	27
1SNK908303R0000	JB8-3	27
1SNK908304R0000	JB8-4	27
1SNK908305R0000	JB8-5	27
1SNK908310R0000	JB8-10	27
1SNK908902R0000	JB8-2-R1	154
1SNK908903R0000	JB8-3-R1	154
1SNK908904R0000	JB8-4-R1	154
1SNK908905R0000	JB8-5-R1	154
1SNK908910R0000	JB8-10-R1	154
1SNK910302R0000	JB10-2	29
1SNK910303R0000	JB10-3	29
1SNK910304R0000	JB10-4	29
1SNK910305R0000	JB10-5	29
1SNK910310R0000	JB10-10	29
1SNK912302R0000	JB12-2	30
1SNK912303R0000	JB12-3	30
1SNK912305R0000	JB12-5	30
1SNK916302R0000	JB16-2	87
1SNK916303R0000	JB16-3	87
1SNK916304R0000	JB16-4	87
1SNK916305R0000	JB16-5	87
1SNK916310R0000	JB16-10	87
1SNK922302R0000	JB22-2	89
1SNK922303R0000	JB22-3	89
1SNK922305R0000	JB22-5	89
1SNK922310R0000	JB22-10	89
1SNK926302R0000	JB26-2	90
1SNK926303R0000	JB26-3	90
1SNK926305R0000	JB26-5	90
1SNK926310R0000	JB26-10	90

Part Number	Type	Page

Part Number	Type	Page

Index
Type classification

Type	Part Number	Page
AJS9	1SNA179726R0200	152
AJS9-BK	1SNA206680R1500	154
AJS9-BL	1SNA206683R0400	154
AJS9-BR	1SNA206782R0000	154
AJS9-GN	1SNA206681R0200	154
AJS9-GR	1SNA206682R0300	154
AJS9-PR	1SNA206772R0000	154
AJS9-RD	1SNA206720R1400	154
AJS9-WH	1SNA206765R0000	154
AL4-M3	1SNA206721R0100	152
AMS 250 BASIC KIT	1SNA360000R2500	267
AMS 600 KIT	1SNA360000R2400	245
AMS CLEANER FLUID	1SNA360155R1700	268
AMS CLEANER KIT	1SNA360156R1000	268
AMS INK CARTRIDGES	1SNA360150R2600	268
AMS PEN 0.18	1SNA360103R1400	268
AMS PEN 0.25	1SNA360100R2500	268
AMS PEN 0.35	1SNA360101R1200	268
AMS PEN 0.50	1SNA360104R1500	268
AMS PEN 0.70	1SNA360105R1600	268
AMS PEN 1.00	1SNA360106R1700	268
ANT	1SNA168675R1400	120
BAM4	1SNK900001R0000	80
BAZ1	1SNK900002R0000	30
BAZH1	1SNK900102R0000	56
BJMI31.2	1SNA206053R0700	91
BJMI31.3	1SNA206054R0000	91
BJMI36.2	1SNA206126R2500	92
BJMI36.3	1SNA206223R0600	92
CDK2.5	1SNK805712R0000	172
CDK2.5-2P-J	1SNK805740R0000	187
CDK2.5-2P-J-BL	1SNK805746R0000	187
CDK2.5-2P-J-BL-E	1SNK805747R0000	187
CDK2.5-2P-J-E	1SNK805741R0000	187
CDK2.5-2P-J-PE	1SNK805751R0000	187
CDK2.5-2P-J-PE-E	1SNK805752R0000	187
CDK2.5-BL	1SNK805742R0000	175
CDK2.5-BL-E	1SNK805743R0000	175
CDK2.5-E	1SNK805713R0000	172
CDK2.5-J	1SNK805738R0000	186
CDK2.5-J-BL	1SNK805744R0000	186
CDK2.5-J-BL-E	1SNK805745R0000	186
CDK2.5-J-E	1SNK805739R0000	186
CDK2.5-J-PE	1SNK805748R0000	186
CDK2.5-J-PE-E	1SNK805749R0000	186
CDK2.5-PE	1SNK805750R0000	174
CDK2.5-PE-E	1SNK805753R0000	174
CDK4	1SNK806712R0000	178
CDK4-E	1SNK806713R0000	178
CDS4	1SNK805714R0000	190
CDS4-E	1SNK805715R0000	190
CDS4-R1	1SNK806714R0000	192
CN5	1SNA179371R1600	120
CO	1SNK900604R0000	155
COP-ZD	1SNK900636R0000	172
CPBP1	1SNA399788R1600	91
CPBP2	1SNA399787R0500	92
CS	1SNK900101R0000	80
CS-R1	1SNK900103R0000	80
CS-R2	1SNK900106R0000	21
CS-R3	1SNK900107R0000	30
DISPOSABLE AMS PEN 0.25	1SNAt360120R1000	268
DISPOSABLE AMS PEN 0.35	1SNA360121R0500	268
DISPOSABLE AMS PEN ED-R 0.18	1SNA360124R1000	268
DISPOSABLE AMS PEN ED-R 0.25	1SNA360122R1000	268
DISPOSABLE AMS PEN ED-R 0.35	1SNA360123R0500	268
DUST COVER	1SNA360161R1500	265
ED2.5-22	1SNK805917R0000	173
EDK2.5-11	1SNK805915R0000	172
EDK2.5-21	1SNK805914R0000	176
EDK2.5-22	1SNK805910R0000	177
EDK2.5-D	1SNK805913R0000	181
EDS4-22	1SNK805911R0000	190
EK10	1SNK710910R0000	29
EK10-3P	1SNK710911R0000	31
EK2.5	1SNK705910R0000	21
EK2.5-3P	1SNK705911R0000	22
EK2.5-4P	1SNK705912R0000	23
EK2.5-D2	1SNK705960R0000	56
EK2.5-S-4P	1SNK705913R0000	50
EK2.5-T3	1SNK705961R0000	60
EK6-3P	1SNK708911R0000	28
EPR1	1SNA178431R2200	201
EPR2	1SNA399726R0700	201
ES10-ST	1SNK508910R0000	152
ES4	1SNK505910R0000	80
ES4-D2	1SNK505960R0000	136
ES4-D2-SF1	1SNK508911R0000	144
ES4-SF	1SNK508960R0000	120
ES4-T3	1SNK505961R0000	146
ES6-3S	1SNK505912R0000	82
ES6-4S	1SNK505911R0000	83
ES-TC6	1SNK900105R0000	24
ES-TC8	1SNK900104R0000	27
HTP500-BAS	1SNA235706R0700	265
HTP500-CLEAN	1SNA235714R2600	265
HTP500-FEED	1SNA235703R0400	265
HTP500-PL	1SNA235704R0500	265
HTP500-PL2	1SNA235705R0600	265
HTP500-PRINT	1SNA235716R2000	265
HTP500-PW	1SNA235709R1200	265
HTP500-ROLL	1SNA235715R2700	265
HTP500-WB	1SNA235717R2100	265
HTS500	1SNA235702R0300	265
JB10-10	1SNK910310R0000	29
JB10-2	1SNK910302R0000	29
JB10-3	1SNK910303R0000	29
JB10-4	1SNK910304R0000	29
JB10-5	1SNK910305R0000	29
JB12-2	1SNK912302R0000	30
JB12-3	1SNK912303R0000	30
JB12-5	1SNK912305R0000	30
JB16-10	1SNK916310R0000	87
JB16-2	1SNK916302R0000	87
JB16-3	1SNK916303R0000	87
JB16-4	1SNK916304R0000	87
JB16-5	1SNK916305R0000	87
JB22-10	1SNK922310R0000	89
JB22-2	1SNK922302R0000	89
JB22-3	1SNK922303R0000	89
JB22-5	1SNK922305R0000	89
JB26-10	1SNK926310R0000	90
JB26-2	1SNK926302R0000	90
JB26-3	1SNK926303R0000	90
JB26-5	1SNK926305R0000	90
JB5-10	1SNK905310R0000	21
JB5-2	1SNK905302R0000	21
JB5-3	1SNK905303R0000	21
JB5-4	1SNK905304R0000	21
JB5-5	1SNK905305R0000	21
JB5-50	1SNK905350R0000	21
JB6-10	1SNK906310R0000	24
JB6-2	1SNK906302R0000	24
JB6-3	1SNK906303R0000	24
JB6-4	1SNK906304R0000	24
JB6-5	1SNK906305R0000	24
JB6-50	1SNK906350R0000	24
JB8-10	1SNK908310R0000	27
JB8-10-R1	1SNK908910R0000	154
JB8-2	1SNK908302R0000	27
JB8-2-R1	1SNK908902R0000	154
JB8-3	1SNK908303R0000	27
JB8-3-R1	1SNK908903R0000	154
JB8-4	1SNK908304R0000	27
JB8-4-R1	1SNK908904R0000	154
JB8-5	1SNK908305R0000	27
JB85-3	1SNK900603R0000	21
JB8-5-R1	1SNK908905R0000	154
KCO	1SNK900624R0000	155
LH	1SNK900605R0000	199
LH-J	1SNK900606R0000	56
LH-R1	1SNK900607R0000	199
MC512	1SNK140000R0000	21
MC512PA	1SNK140011R0000	246
	1SNK140012R0000	248
	1SNK140021R0000	246
	1SNK140022R0000	248
	1SNK140031R0000	246
	1SNK140032R0000	248
	1SNK140041R0000	246
	1SNK140042R0000	248
	1SNK140051R0000	246
	1SNK140052R0000	248
	1SNK140061R0000	246
	1SNK140062R0000	248
	1SNK140071R0000	246
	1SNK140072R0000	248
	1SNK140081R0000	246
	1SNK140082R0000	248
	1SNK140083R0000	246
	1SNK140084R0000	248
	1SNK140091R0000	246
	1SNK140092R0000	248
	1SNK140101R0000	246
	1SNK140102R0000	248
	1SNK140111R0000	246
	1SNK140112R0000	248
	1SNK140121R0000	246
	1SNK140122R0000	248
	1SNK140131R0000	246
	1SNK140132R0000	248
	1SNK140141R0000	246
	1SNK140142R0000	248
	1SNK140151R0000	246
	1SNK140152R0000	248
	1SNK140161R0000	246
	1SNK140162R0000	248
	1SNK140171R0000	246
	1SNK140172R0000	248
	1SNK140181R0000	246
	1SNK140182R0000	248
	1SNK140191R0000	246
	1SNK140192R0000	248
	1SNK140201R0000	246
	1SNK140202R0000	248
	1SNK145011R0000	246
	1SNK145012R0000	248
	1SNK145021R0000	246
	1SNK145022R0000	248
	1SNK145031R0000	246
	1SNK145032R0000	248
	1SNK145041R0000	246
	1SNK145042R0000	248
	1SNK145051R0000	246
	1SNK145052R0000	248
	1SNK145061R0000	246
	1SNK145062R0000	248
	1SNK145071R0000	246
	1SNK145072R0000	248
	1SNK145081R0000	246
	1SNK145082R0000	248
	1SNK145091R0000	246
	1SNK145092R0000	248
	1SNK145102R0000	248
	1SNK146011R0000	246
	1SNK146012R0000	248
	1SNK146021R0000	246
	1SNK146022R0000	248
	1SNK146031R0000	246
	1SNK146032R0000	248
	1SNK146041R0000	246
	1SNK146042R0000	248
	1SNK146051R0000	246
	1SNK146052R0000	248
	1SNK146061R0000	246
	1SNK146062R0000	248
	1SNK146071R0000	246
	1SNK146072R0000	248
	1SNK146081R0000	246
	1SNK146082R0000	248
	1SNK146091R0000	246
	1SNK146092R0000	248
	1SNK146101R0000	246
	1SNK146102R0000	248
	1SNK146111R0000	246
	1SNK146112R0000	248
	1SNK146121R0000	246
	1SNK146122R0000	248
	1SNK146131R0000	246
	1SNK146132R0000	248
	1SNK146141R0000	246
	1SNK146142R0000	248
	1SNK146151R0000	246
	1SNK146152R0000	248
	1SNK146161R0000	246
	1SNK146162R0000	248
	1SNK146171R0000	246
	1SNK146172R0000	248
	1SNK146181R0000	246
	1SNK146182R0000	248
	1SNK146191R0000	246
	1SNK146192R0000	248
	1SNK146201R0000	246
	1SNK146202R0000	248
	1SNK146211R0000	246
	1SNK146212R0000	248
	1SNK146221R0000	246
	1SNK146222R0000	248
	1SNK146231R0000	246
	1SNK146232R0000	249
	1SNK146241R0000	246
	1SNK146242R0000	249
	1SNK146251R0000	246
	1SNK146252R0000	249
	1SNK146261R0000	247
	1SNK146262R0000	249
	1SNK147001R0000	247

Index
Type classification

Type	Part Number	Page
	1SNK147002R0000	249
	1SNK147011R0000	247
	1SNK147012R0000	249
	1SNK147021R0000	247
	1SNK147022R0000	249
	1SNK147031R0000	247
	1SNK147032R0000	249
	1SNK147041R0000	247
	1SNK147042R0000	249
	1SNK147051R0000	247
	1SNK147052R0000	249
	1SNK147061R0000	247
	1SNK147062R0000	249
	1SNK147071R0000	247
	1SNK147072R0000	249
	1SNK147081R0000	247
	1SNK147082R0000	249
	1SNK147091R0000	247
	1SNK147092R0000	249
	1SNK148001R0000	247
	1SNK148002R0000	249
	1SNK148011R0000	247
	1SNK148012R0000	249
	1SNK148021R0000	247
	1SNK148022R0000	249
	1SNK148031R0000	247
	1SNK148032R0000	249
	1SNK148041R0000	247
	1SNK148042R0000	249
	1SNK148051R0000	247
	1SNK148052R0000	249
	1SNK148061R0000	247
	1SNK148062R0000	249
	1SNK148071R0000	247
	1SNK148072R0000	249
	1SNK148091R0000	247
	1SNK148092R0000	249
	1SNK148101R0000	247
	1SNK148102R0000	249
	1SNK148111R0000	247
	1SNK148112R0000	249
	1SNK148121R0000	247
	1SNK148122R0000	249
	1SNK148131R0000	247
	1SNK148132R0000	249
	1SNK148141R0000	247
	1SNK148142R0000	249
	1SNK148151R0000	247
	1SNK148152R0000	249
	1SNK148161R0000	247
	1SNK148162R0000	249
	1SNK148171R0000	247
	1SNK148172R0000	249
	1SNK148181R0000	247
	1SNK148182R0000	249
	1SNK148192R0000	249
	1SNK148202R0000	249
	1SNK148212R0000	249
	1SNK148222R0000	249
	1SNK149001R0000	247
	1SNK149002R0000	249
	1SNK149011R0000	247
	1SNK149012R0000	249
	1SNK149999R0000	21
MC512-YL	1SNK140004R0000	244
MC612	1SNK150000R0000	24
MC612PA	1SNK150011R0000	252
	1SNK150012R0000	254
	1SNK150021R0000	252
	1SNK150022R0000	254
	1SNK150031R0000	252
	1SNK150032R0000	254
	1SNK150041R0000	252
	1SNK150042R0000	254
	1SNK150051R0000	252
	1SNK150052R0000	254
	1SNK150061R0000	252
	1SNK150062R0000	254
	1SNK150071R0000	252
	1SNK150072R0000	254
	1SNK150081R0000	252
	1SNK150082R0000	254
	1SNK150083R0000	252
	1SNK150084R0000	254
	1SNK150091R0000	252
	1SNK150092R0000	254
	1SNK150101R0000	252
	1SNK150102R0000	254
	1SNK150111R0000	252

Type	Part Number	Page
	1SNK150112R0000	254
	1SNK150121R0000	252
	1SNK150122R0000	254
	1SNK150131R0000	252
	1SNK150132R0000	254
	1SNK150141R0000	252
	1SNK150142R0000	254
	1SNK150151R0000	252
	1SNK150152R0000	254
	1SNK150161R0000	252
	1SNK150162R0000	254
	1SNK150171R0000	252
	1SNK150172R0000	254
	1SNK150181R0000	252
	1SNK150182R0000	254
	1SNK150191R0000	252
	1SNK150192R0000	254
	1SNK150201R0000	252
	1SNK150202R0000	254
	1SNK155011R0000	252
	1SNK155012R0000	254
	1SNK155021R0000	252
	1SNK155022R0000	254
	1SNK155031R0000	252
	1SNK155032R0000	254
	1SNK155041R0000	252
	1SNK155042R0000	254
	1SNK155051R0000	252
	1SNK155052R0000	254
	1SNK155061R0000	252
	1SNK155062R0000	254
	1SNK155071R0000	252
	1SNK155072R0000	254
	1SNK155081R0000	252
	1SNK155082R0000	254
	1SNK155091R0000	252
	1SNK155092R0000	254
	1SNK155102R0000	254
	1SNK156011R0000	252
	1SNK156012R0000	254
	1SNK156021R0000	252
	1SNK156022R0000	254
	1SNK156031R0000	252
	1SNK156032R0000	254
	1SNK156041R0000	252
	1SNK156042R0000	254
	1SNK156051R0000	252
	1SNK156052R0000	254
	1SNK156061R0000	252
	1SNK156062R0000	254
	1SNK156071R0000	252
	1SNK156072R0000	254
	1SNK156081R0000	252
	1SNK156082R0000	254
	1SNK156091R0000	252
	1SNK156092R0000	254
	1SNK156101R0000	252
	1SNK156102R0000	254
	1SNK156111R0000	252
	1SNK156112R0000	254
	1SNK156121R0000	252
	1SNK156122R0000	254
	1SNK156131R0000	252
	1SNK156132R0000	254
	1SNK156141R0000	252
	1SNK156142R0000	254
	1SNK156151R0000	252
	1SNK156152R0000	254
	1SNK156161R0000	252
	1SNK156162R0000	254
	1SNK156171R0000	252
	1SNK156172R0000	254
	1SNK156181R0000	252
	1SNK156182R0000	254
	1SNK156191R0000	252
	1SNK156192R0000	254
	1SNK156201R0000	252
	1SNK156202R0000	254
	1SNK156211R0000	252
	1SNK156212R0000	254
	1SNK156221R0000	252
	1SNK156222R0000	254
	1SNK156231R0000	252
	1SNK156232R0000	254
	1SNK156241R0000	253
	1SNK156242R0000	254
	1SNK156251R0000	253
	1SNK156252R0000	255
	1SNK156261R0000	253

Type	Part Number	Page
	1SNK156262R0000	255
	1SNK157001R0000	253
	1SNK157002R0000	255
	1SNK157011R0000	253
	1SNK157012R0000	255
	1SNK157021R0000	253
	1SNK157022R0000	255
	1SNK157031R0000	253
	1SNK157032R0000	255
	1SNK157041R0000	253
	1SNK157042R0000	255
	1SNK157051R0000	253
	1SNK157052R0000	255
	1SNK157061R0000	253
	1SNK157062R0000	255
	1SNK157071R0000	253
	1SNK157072R0000	255
	1SNK157081R0000	253
	1SNK157082R0000	255
	1SNK157091R0000	253
	1SNK157092R0000	255
	1SNK158001R0000	253
	1SNK158002R0000	255
	1SNK158011R0000	253
	1SNK158012R0000	255
	1SNK158021R0000	253
	1SNK158022R0000	255
	1SNK158031R0000	253
	1SNK158032R0000	255
	1SNK158041R0000	253
	1SNK158042R0000	255
	1SNK158051R0000	253
	1SNK158052R0000	255
	1SNK158061R0000	253
	1SNK158062R0000	255
	1SNK158071R0000	253
	1SNK158072R0000	255
	1SNK158091R0000	253
	1SNK158092R0000	255
	1SNK158101R0000	253
	1SNK158102R0000	255
	1SNK158111R0000	253
	1SNK158112R0000	255
	1SNK158121R0000	253
	1SNK158122R0000	255
	1SNK158131R0000	253
	1SNK158132R0000	255
	1SNK158141R0000	253
	1SNK158142R0000	255
	1SNK158151R0000	253
	1SNK158152R0000	255
	1SNK158161R0000	253
	1SNK158162R0000	255
	1SNK158171R0000	253
	1SNK158172R0000	255
	1SNK158181R0000	253
	1SNK158182R0000	255
	1SNK158192R0000	255
	1SNK158202R0000	255
	1SNK158212R0000	255
	1SNK158222R0000	255
	1SNK159001R0000	253
	1SNK159002R0000	255
	1SNK159011R0000	253
	1SNK159012R0000	255
	1SNK159999R0000	24
MC612-YL	1SNK150004R0000	250
MC812	1SNK160000R0000	30
MC812PA	1SNK160011R0000	257
	1SNK160012R0000	259
	1SNK160021R0000	257
	1SNK160022R0000	259
	1SNK160031R0000	257
	1SNK160032R0000	259
	1SNK160041R0000	257
	1SNK160042R0000	259
	1SNK160051R0000	257
	1SNK160052R0000	259
	1SNK160061R0000	257
	1SNK160062R0000	259
	1SNK160071R0000	257
	1SNK160072R0000	259
	1SNK160081R0000	257
	1SNK160082R0000	259
	1SNK160083R0000	257
	1SNK160084R0000	259
	1SNK160091R0000	257
	1SNK160092R0000	259
	1SNK160101R0000	257

Index_1SNK160027C0206

Index
Type classification

Type	Part Number	Page
	1SNK160102R0000	259
	1SNK160111R0000	257
	1SNK160112R0000	259
	1SNK160121R0000	257
	1SNK160122R0000	259
	1SNK160131R0000	257
	1SNK160132R0000	259
	1SNK160141R0000	257
	1SNK160142R0000	259
	1SNK160151R0000	257
	1SNK160152R0000	259
	1SNK160161R0000	257
	1SNK160162R0000	259
	1SNK160171R0000	257
	1SNK160172R0000	259
	1SNK160181R0000	257
	1SNK160182R0000	259
	1SNK160191R0000	257
	1SNK160192R0000	259
	1SNK160201R0000	257
	1SNK160202R0000	259
	1SNK165011R0000	257
	1SNK165012R0000	259
	1SNK165021R0000	257
	1SNK165022R0000	259
	1SNK165031R0000	257
	1SNK165032R0000	259
	1SNK165041R0000	257
	1SNK165042R0000	259
	1SNK165051R0000	257
	1SNK165052R0000	259
	1SNK165061R0000	257
	1SNK165062R0000	259
	1SNK165071R0000	257
	1SNK165072R0000	259
	1SNK165081R0000	257
	1SNK165082R0000	259
	1SNK165091R0000	257
	1SNK165092R0000	259
	1SNK165102R0000	259
	1SNK166011R0000	257
	1SNK166012R0000	259
	1SNK166021R0000	257
	1SNK166022R0000	259
	1SNK166031R0000	257
	1SNK166032R0000	259
	1SNK166041R0000	257
	1SNK166042R0000	259
	1SNK166051R0000	257
	1SNK166052R0000	259
	1SNK166061R0000	257
	1SNK166062R0000	259
	1SNK166071R0000	257
	1SNK166072R0000	259
	1SNK166081R0000	257
	1SNK166082R0000	259
	1SNK166091R0000	257
	1SNK166092R0000	259
	1SNK166101R0000	257
	1SNK166102R0000	259
	1SNK166111R0000	257
	1SNK166112R0000	259
	1SNK166121R0000	257
	1SNK166122R0000	259
	1SNK166131R0000	257
	1SNK166132R0000	259
	1SNK166141R0000	257
	1SNK166142R0000	259
	1SNK166151R0000	257
	1SNK166152R0000	259
	1SNK166161R0000	257
	1SNK166162R0000	259
	1SNK166171R0000	257
	1SNK166172R0000	259
	1SNK166181R0000	257
	1SNK166182R0000	259
	1SNK166191R0000	257
	1SNK166192R0000	259
	1SNK166201R0000	257
	1SNK166202R0000	259
	1SNK166211R0000	257
	1SNK166212R0000	259
	1SNK166221R0000	257
	1SNK166222R0000	259
	1SNK166231R0000	258
	1SNK166232R0000	260
	1SNK166241R0000	258
	1SNK166242R0000	260
	1SNK166251R0000	258

Type	Part Number	Page
	1SNK166252R0000	260
	1SNK166261R0000	258
	1SNK166262R0000	260
	1SNK167001R0000	258
	1SNK167002R0000	260
	1SNK167011R0000	258
	1SNK167012R0000	260
	1SNK167021R0000	258
	1SNK167022R0000	260
	1SNK167031R0000	258
	1SNK167032R0000	260
	1SNK167041R0000	258
	1SNK167042R0000	260
	1SNK167051R0000	258
	1SNK167052R0000	260
	1SNK167061R0000	258
	1SNK167062R0000	260
	1SNK167071R0000	258
	1SNK167072R0000	260
	1SNK167081R0000	258
	1SNK167082R0000	260
	1SNK167091R0000	258
	1SNK167092R0000	260
	1SNK168001R0000	258
	1SNK168002R0000	260
	1SNK168011R0000	258
	1SNK168012R0000	260
	1SNK168021R0000	258
	1SNK168022R0000	260
	1SNK168031R0000	258
	1SNK168032R0000	260
	1SNK168041R0000	258
	1SNK168042R0000	260
	1SNK168051R0000	258
	1SNK168052R0000	260
	1SNK168061R0000	258
	1SNK168062R0000	260
	1SNK168071R0000	258
	1SNK168072R0000	260
	1SNK168091R0000	258
	1SNK168092R0000	260
	1SNK168101R0000	258
	1SNK168102R0000	260
	1SNK168111R0000	258
	1SNK168112R0000	260
	1SNK168121R0000	258
	1SNK168122R0000	260
	1SNK168131R0000	258
	1SNK168132R0000	260
	1SNK168141R0000	258
	1SNK168142R0000	260
	1SNK168151R0000	258
	1SNK168152R0000	260
	1SNK168161R0000	258
	1SNK168162R0000	260
	1SNK168171R0000	258
	1SNK168172R0000	260
	1SNK168181R0000	258
	1SNK168182R0000	260
	1SNK168192R0000	260
	1SNK168202R0000	260
	1SNK168212R0000	260
	1SNK168222R0000	260
	1SNK169001R0000	258
	1SNK169002R0000	260
	1SNK169011R0000	258
	1SNK169012R0000	260
	1SNK169999R0000	30
MC812-YL	1SNK160004R0000	256
MCLH	1SNK900630R0000	201
MCLH-R1	1SNK900631R0000	201
MCLH-R1-YL	1SNK900634R0000	201
MCLH-YL	1SNK900633R0000	201
MG2-ABM 991012	1SNB991012R0000	266
MG2-CKP 991670	1SNB991670R0000	266
MG2-CTB 991006	1SNB991006R0000	266
MG2-ETB 991016	1SNB991016R0000	244
MG2-ETR 991600	1SNB991600R0000	266
MG2-ETR 991601	1SNB991601R0000	266
MG2-ETR 991602	1SNB991602R0000	266
MG2-ETR 991603	1SNB991603R0000	266
MG2-ETR 991606	1SNB991606R0000	266
MG2-LTB 991013	1SNB991013R0000	266
MG2-MTB 991008	1SNB991008R0000	266
MG2-PLT 991002	1SNB991002R0000	266
MG2-PTD 991007	1SNB991007R0000	266
MG2-PTM 991010	1SNB991010R0000	261
MG2-PWC 991000	1SNB991000R0000	266
MG2-QTB 991011	1SNB991011R0000	266

Type	Part Number	Page
MG2-STB 991005	1SNB991005R0000	266
MG2-TCT 991562	1SNB991562R0000	266
MG2-TDMO-01 40340	1SNB040340R0412	261
MG2-TDMO-01 40341	1SNB040341R0416	261
MG2-TDMO-01 40390	1SNB040390R0412	261
MG2-TDMO-01 40391	1SNB040391R0416	261
MG2-TDMO-02 40440	1SNB040440R0412	261
MG2-TDMO-02 40441	1SNB040441R0416	261
MG2-TDMO-02 40490	1SNB040490R0412	261
MG2-TDMO-02 40491	1SNB040491R0416	261
MG2-TDMO-03 40540	1SNB040540R0412	261
MG2-TDMO-03 40541	1SNB040541R0416	261
MG2-TDMO-03 40590	1SNB040590R0412	261
MG2-TDMO-03 40591	1SNB040591R0416	261
MG2-TGT 991532	1SNB991532R0000	266
MG2-TLT 991522	1SNB991522R0000	266
MG2-TMT 991513	1SNB991513R0000	266
MG2-TST 991552	1SNB991552R0000	266
MG2-TTB 991512	1SNB991512R0000	266
MG2-TTD 991563	1SNB991563R0000	266
MG2-TWC 991502	1SNB991502R0000	266
MG2-TWT 991542	1SNB991542R0000	266
MG2-WTB 991004	1SNB991004R0000	266
MG3 KIT	1SNB419001R0000	244
MG-CPM 13 41740	1SNB041740R0512	244
MG-CPM 13 41741	1SNB041741R0612	250
MG-CPM 13 41790	1SNB041790R0512	21
MG-CPM 13 41791	1SNB041791R0612	30
MG-CPMFA 43196	1SNB043196R0012	185
MG-TAA 49148	1SNB049148R1735	201
MG-TAA 49198	1SNB049198R1735	201
MG-TAA 49448	1SNB049448R8530	201
MG-TAA 49498	1SNB049498R8530	201
MG-TAPW 49046	1SNB049046R0929	263
MG-TAPW 49096	1SNB049096R0929	263
MG-TAR 45194	1SNB045194R1735	201
MG-TAR 45490	1SNB045490R8530	201
MG-VYT 46415	1SNB046415R0615	217
MG-VYT 46915	1SNB046915R0615	217
PAM43020	1SNA235106R2600	230
PC5-10	1SNA113544R1200	105
PC5-2	1SNA113542R1000	105
PC8-10	1SNA163313R2400	155
PC81-10	1SNA173523R1100	120
PC8-2	1SNA116538R1700	226
PC8-3	1SNA116539R1000	226
PC8-4	1SNA116540R2500	226
PC8-R1	1SNA400711R0600	153
PC8-R2	1SNA400712R0700	155
PC8-R3	1SNA400713R0000	155
PC8-R4	1SNA400724R0300	155
PC8-R5	1SNA400842R0000	155
PC8-R6	1SNA400843R0000	155
PC8-R7	1SNA400849R0000	155
PC8-R8	1SNA400850R0000	155
PEN HOLDER	1SNA360098R1200	268
PG5	1SNK900401R0000	52
PG5-R1	1SNK900402R0000	52
PG5-R2	1SNK900403R0000	211
PIB2-TT	1SNA235155R2600	201
PIB2-TT-YL	1SNA235157R2000	201
PL10	1SNK900621R0000	85
PL16	1SNK900622R0000	87
PL5	1SNK900618R0000	80
PL6	1SNK900619R0000	81
PL8	1SNK900620R0000	84
PR3.G2	1SNA164800R0300	197
PR3.Z2	1SNA174300R1700	196
PR30	1SNA173220R0500	196
PR4	1SNA168500R1200	198
PR5	1SNA168700R2200	198
PR50	1SNA178529R0400	197
PS-3	1SNK900650R0000	213
PT-3	1SNK900625R0000	210
PT-ZD	1SNK900660R0000	185
RC1010	1SNA238000R1600	91
RCPEAD-TT	1SNA235158R0100	201
RCPEAD-TT-YL	1SNA235159R0200	201
RCPEB	1SNA178430R0500	201
RIB-B	1SNA235710R0600	265
RIB-R	1SNA235711R2300	265
RIB-RS	1SNA235718R0200	265
RILS	1SNK900627R0000	219
SC-JB8-2	1SNK900652R0000	152
SC-JB8-3	1SNK900653R0000	156
SC-JB8-3-OR	1SNK900657R0000	231
SC-JB8-4	1SNK900654R0000	156
SC-JB8-4-OR	1SNK900658R0000	231
SC-JB8-5	1SNK900655R0000	231

Index
Type classification

Type	Part Number	Page
SERVICE KIT FOR AMS 500	1SNA360162R1600	268
SHB	1SNK900602R0000	56
SHBP	1SNK900601R0000	21
SHBS	1SNK900600R0000	80
SPDST1	1SNA360163R1700	268
SPRC 1	1SNA360010R1500	268
SPRC 10	1SNA360020R1700	268
SPRC 11	1SNA360021R0400	268
SPRC 13	1SNA360023R0600	268
SPRC 14	1SNA360024R0700	268
SPRC 15	1SNA360025R0000	268
SPRC 16	1SNA360026R0100	268
SPRC 2	1SNA360011R1500	268
SPRC 21	1SNA360031R0600	264
SPRC 26	1SNA360036R0300	268
SPRC 27	1SNA360037R0400	268
SPRC 28	1SNA360040R2300	268
SPRC 29	1SNA360038R1500	268
SPRC 30-3	1SNA360039R1700	245
SPRC 4	1SNA360014R0500	268
SPRC 5	1SNA360015R0600	268
SPRC 6	1SNA360016R0700	268
SPRC 7	1SNA360017R0000	268
SPRC 8	1SNA360018R1100	268
SPRC 9	1SNA360019R1200	268
TC5	1SNK900200R0000	21
TC5-R1	1SNK900201R0000	21
TGA8	1SNA168672R1100	120
	1SNA168673R1200	120
	1SNA168674R1300	120
TO3.5-100-INS	1SNK900644R0000	213
TO3.5-50	1SNK900640R0000	213
TO3.5-50-A	1SNK900659R0000	213
TO4-100	1SNK900641R0000	213
TO5.5-125	1SNK900642R0000	213
TO6.5-150	1SNK900643R0000	213
TP2	1SNK900203R0000	30
TP4	1SNK900205R0000	30
UMH	1SNK900611R0000	30
VR-ZD	1SNK900637R0000	185
ZD2.5-11	1SNK805016R0000	172
ZD2.5-22	1SNK805017R0000	173
ZD2.5-22-PE	1SNK805156R0000	174
ZDK2.5-11	1SNK805015R0000	175
ZDK2.5-11-BL	1SNK805025R0000	175
ZDK2.5-11-PE	1SNK805150R0000	179
ZDK2.5-21	1SNK805014R0000	176
ZDK2.5-22	1SNK805010R0000	177
ZDK2.5-22-BL	1SNK805020R0000	177
ZDK2.5-22-PE	1SNK805152R0000	180
ZDK2.5-D1	1SNK805214R0000	182
ZDK2.5-D1-PE	1SNK805250R0000	184
ZDK2.5-D2	1SNK805213R0000	181
ZDK2.5-D2-BL	1SNK805223R0000	181
ZDK2.5-D2-PE	1SNK805212R0000	183
ZDK4-22	1SNK806010R0000	178
ZDS4-22	1SNK805013R0000	190
ZDS4-22-R1	1SNK806013R0000	192
ZK10	1SNK710010R0000	29
ZK10-3P	1SNK710011R0000	31
ZK10-3P-BL	1SNK710021R0000	31
ZK10-3P-PV	1SNK710064R0000	32
ZK10-3P-PV-BL	1SNK710067R0000	32
ZK10-BL	1SNK710020R0000	29
ZK10-OR	1SNK710030R0000	29
ZK10-PE	1SNK710150R0000	30
ZK10-PE-3P	1SNK710151R0000	32
ZK10-PV	1SNK710063R0000	30
ZK10-PV-BL	1SNK710065R0000	30
ZK16	1SNK712010R0000	33
ZK16-3P	1SNK712011R0000	35
ZK16-3P-BL	1SNK712021R0000	35
ZK16-3P-PV	1SNK712064R0000	36
ZK16-3P-PV-BL	1SNK712067R0000	36
ZK16-BL	1SNK712020R0000	33
ZK16-PE	1SNK712150R0000	34
ZK16-PE-3P	1SNK712151R0000	36
ZK16-PV	1SNK712063R0000	34
ZK16-PV-BL	1SNK712065R0000	34
ZK2.5	1SNK705010R0000	21
ZK2.5-3P	1SNK705011R0000	22
ZK2.5-3P-BK	1SNK705073R0000	22
ZK2.5-3P-BL	1SNK705021R0000	22
ZK2.5-3P-GN	1SNK705068R0000	22
ZK2.5-3P-OR	1SNK705031R0000	22
ZK2.5-3P-RD	1SNK705069R0000	22
ZK2.5-3P-WH	1SNK705072R0000	22
ZK2.5-3P-YL	1SNK705067R0000	22
ZK2.5-4P	1SNK705012R0000	23
ZK2.5-4P-BK	1SNK705080R0000	23
ZK2.5-4P-BL	1SNK705022R0000	23
ZK2.5-4P-GN	1SNK705075R0000	23
ZK2.5-4P-OR	1SNK705032R0000	23
ZK2.5-4P-RD	1SNK705076R0000	23
ZK2.5-4P-WH	1SNK705079R0000	23
ZK2.5-4P-YL	1SNK705074R0000	23
ZK2.5-BK	1SNK705066R0000	21
ZK2.5-BL	1SNK705020R0000	21
ZK2.5-CH-4P-LR	1SNK705710R0000	65
ZK2.5-CH-4P-RL	1SNK705711R0000	66
ZK2.5-D1	1SNK705211R0000	57
ZK2.5-D1-PE	1SNK705250R0000	56
ZK2.5-D2	1SNK705210R0000	56
ZK2.5-D2-BL	1SNK705220R0000	56
ZK2.5-D2-PE	1SNK705212R0000	58
ZK2.5-D-CH2-DU-RL	1SNK705219R0000	69
ZK2.5-D-CH-DU	1SNK705214R0000	68
ZK2.5-D-CH-UD	1SNK705213R0000	67
ZK2.5-GN	1SNK705061R0000	21
ZK2.5-L-L-PE	1SNK705512R0000	62
ZK2.5-L-N-PE	1SNK705513R0000	63
ZK2.5-OR	1SNK705030R0000	21
ZK2.5-PE	1SNK705150R0000	21
ZK2.5-PE-3P	1SNK705151R0000	22
ZK2.5-PE-4P	1SNK705152R0000	23
ZK2.5-RD	1SNK705062R0000	21
ZK2.5-S	1SNK705310R0000	49
ZK2.5-S-4P	1SNK705312R0000	50
ZK2.5-S-4P-BL	1SNK705321R0000	50
ZK2.5-S-4P-OR	1SNK705331R0000	50
ZK2.5-S-BL	1SNK705320R0000	49
ZK2.5-SF	1SNK706410R0000	51
ZK2.5-SF-R1	1SNK706411R0000	55
ZK2.5-SF-R3	1SNK706412R0000	55
ZK2.5-S-OR	1SNK705330R0000	49
ZK2.5-SP	1SNK705311R0000	52
ZK2.5-SP-4P	1SNK705313R0000	53
ZK2.5-S-R1	1SNK706310R0000	51
ZK2.5-T1	1SNK705511R0000	61
ZK2.5-T1-PE	1SNK705550R0000	60
ZK2.5-T3	1SNK705510R0000	60
ZK2.5-WH	1SNK705065R0000	21
ZK2.5-YL	1SNK705060R0000	21
ZK4	1SNK706010R0000	24
ZK4-3P	1SNK706011R0000	25
ZK4-3P-BL	1SNK706021R0000	25
ZK4-3P-OR	1SNK706031R0000	25
ZK4-4P	1SNK706012R0000	26
ZK4-4P-BL	1SNK706022R0000	26
ZK4-4P-OR	1SNK706032R0000	26
ZK4-BK	1SNK706066R0000	24
ZK4-BL	1SNK706020R0000	24
ZK4-OR	1SNK706030R0000	24
ZK4-PE	1SNK706150R0000	24
ZK4-PE-3P	1SNK706151R0000	25
ZK4-PE-4P	1SNK706152R0000	26
ZK4-RD	1SNK706062R0000	24
ZK4-YL	1SNK706060R0000	24
ZK6	1SNK708010R0000	27
ZK6-3P	1SNK708011R0000	28
ZK6-3P-BL	1SNK708021R0000	28
ZK6-3P-OR	1SNK708031R0000	28
ZK6-BK	1SNK708066R0000	27
ZK6-BL	1SNK708020R0000	27
ZK6-OR	1SNK708030R0000	27
ZK6-PE	1SNK708150R0000	27
ZK6-PE-3P	1SNK708151R0000	28
ZK6-RD	1SNK708062R0000	27
ZK6-YL	1SNK708060R0000	27
ZS10	1SNK508010R0000	84
ZS10-BK	1SNK508066R0000	84
ZS10-BL	1SNK508020R0000	84
ZS10-BR	1SNK508064R0000	84
ZS10-GN	1SNK508061R0000	84
ZS10-OR	1SNK508030R0000	84
ZS10-PE	1SNK508150R0000	84
ZS10-PE-R1	1SNK508151R0000	153
ZS10-PR	1SNK508063R0000	84
ZS10-R1	1SNK508011R0000	152
ZS10-RD	1SNK508062R0000	84
ZS10-S	1SNK508315R0000	111
ZS10-S-BL	1SNK508320R0000	111
ZS10-SF	1SNK508418R0000	133
ZS10-SF-R1	1SNK508421R0000	134
ZS10-SF-R3	1SNK508422R0000	134
ZS10-SP	1SNK508316R0000	116
ZS10-S-R2	1SNK508417R0000	135
ZS10-ST	1SNK508310R0000	154
ZS10-ST-1	1SNK508312R0000	152
ZS10-ST-T4	1SNK508311R0000	152
ZS10-WH	1SNK508065R0000	84
ZS10-YL	1SNK508060R0000	84
ZS150	1SNK531010R0000	91
ZS150-BL	1SNK531020R0000	91
ZS150-YL	1SNK531060R0000	91
ZS16	1SNK510010R0000	85
ZS16-BL	1SNK510020R0000	85
ZS16-OR	1SNK510030R0000	85
ZS16-PE	1SNK510150R0000	85
ZS240	1SNK536010R0000	92
ZS240-BL	1SNK536020R0000	92
ZS240-YL	1SNK536060R0000	92
ZS25	1SNK512010R0000	86
ZS25-BL	1SNK512020R0000	86
ZS25-PE	1SNK512150R0000	86
ZS25-YL	1SNK512060R0000	86
ZS35	1SNK516010R0000	87
ZS35-BL	1SNK516020R0000	87
ZS35-OR	1SNK516030R0000	87
ZS35-PE	1SNK516150R0000	87
ZS35-PEN	1SNK516170R0000	101
ZS4	1SNK505010R0000	80
ZS4-BK	1SNK505066R0000	80
ZS4-BL	1SNK505020R0000	80
ZS4-BR	1SNK505064R0000	80
ZS4-D1	1SNK505211R0000	137
ZS4-D2	1SNK505210R0000	136
ZS4-D2-BL	1SNK505220R0000	136
ZS4-D2-OR	1SNK505230R0000	136
ZS4-D2-S	1SNK505315R0000	142
ZS4-D2-SF1	1SNK508425R0000	144
ZS4-D2-SF1-R1	1SNK508423R0000	145
ZS4-D2-SF1-R3	1SNK508424R0000	145
ZS4-D2-S-T2	1SNK505316R0000	143
ZS4-D-CH-DU	1SNK505215R0000	149
ZS4-D-CH-UD	1SNK505214R0000	148
ZS4-GN	1SNK505061R0000	80
ZS4-OR	1SNK505030R0000	80
ZS4-PE	1SNK505150R0000	80
ZS4-PE-R2	1SNK506153R0000	131
ZS4-PR	1SNK505063R0000	80
ZS4-R1	1SNK508013R0000	124
ZS4-R2	1SNK506013R0000	130
ZS4-RD	1SNK505062R0000	80
ZS4-S	1SNK505310R0000	105
ZS4-S-BL	1SNK505320R0000	105
ZS4-SF	1SNK506410R0000	126
ZS4-SF1	1SNK508410R0000	120
ZS4-SF1-OR	1SNK508430R0000	120
ZS4-SF1-R1	1SNK508412R0000	122
ZS4-SF1-R2	1SNK508413R0000	123
ZS4-SF1-R3	1SNK508414R0000	122
ZS4-SF1-R4	1SNK508415R0000	123
ZS4-SF1-T2	1SNK508411R0000	121
ZS4-SF-R1	1SNK506412R0000	128
ZS4-SF-R2	1SNK506413R0000	129
ZS4-SF-R3	1SNK506415R0000	128
ZS4-SF-R4	1SNK506416R0000	129
ZS4-SF-T2	1SNK506411R0000	127
ZS4-S-OR	1SNK505330R0000	105
ZS4-SP	1SNK505313R0000	112
ZS4-SP-R1	1SNK506313R0000	114
ZS4-SP-T2	1SNK505314R0000	113
ZS4-SP-T2-R1	1SNK506314R0000	115
ZS4-S-R1	1SNK506310R0000	107
ZS4-S-R1-BL	1SNK506320R0000	107
ZS4-S-R1-OR	1SNK506330R0000	107
ZS4-S-R2	1SNK506414R0000	132
ZS4-S-R3	1SNK508416R0000	125
ZS4-S-R3-T2	1SNK508419R0000	125
ZS4-S-T2	1SNK505311R0000	106
ZS4-S-T2.3	1SNK505312R0000	106
ZS4-S-T2.3-R1	1SNK506312R0000	108
ZS4-S-T2-BL	1SNK505321R0000	106
ZS4-S-T2-OR	1SNK505331R0000	106
ZS4-S-T2-R1	1SNK506311R0000	108
ZS4-S-T2-R1-BL	1SNK506321R0000	108
ZS4-S-T2-R1-OR	1SNK506331R0000	108
ZS4-T3	1SNK505212R0000	146
ZS4-T3-R1	1SNK506213R0000	147
ZS4-WH	1SNK505065R0000	80
ZS4-YL	1SNK505060R0000	80
ZS50	1SNK516011R0000	88
ZS50-BK	1SNK516064R0000	88
ZS50-BL	1SNK516021R0000	88
ZS50-PE	1SNK516151R0000	88
ZS50-RD	1SNK516063R0000	88

Index
Type classification

Type	Part Number	Page
ZS50-YL	1SNK516060R0000	88
ZS6	1SNK506010R0000	81
ZS6-3S	1SNK506011R0000	82
ZS6-3S-BL	1SNK506021R0000	82
ZS6-3S-PE	1SNK506151R0000	82
ZS6-3S-YL	1SNK506067R0000	82
ZS6-4S	1SNK506012R0000	83
ZS6-4S-BL	1SNK506022R0000	83
ZS6-4S-PE	1SNK506152R0000	83
ZS6-4S-YL	1SNK506068R0000	83
ZS6-BK	1SNK506066R0000	81
ZS6-BL	1SNK506020R0000	81
ZS6-BR	1SNK506064R0000	81
ZS6-D1	1SNK506211R0000	139
ZS6-D1-PE	1SNK506250R0000	138
ZS6-D1-RD	1SNK506214R0000	139
ZS6-D2	1SNK506210R0000	138
ZS6-D2-BK	1SNK506266R0000	138
ZS6-D2-BL	1SNK506220R0000	138
ZS6-D2-OR	1SNK506230R0000	138
ZS6-D2-PE	1SNK506212R0000	140
ZS6-D2-RD	1SNK506262R0000	138
ZS6-D2-WH	1SNK506265R0000	138
ZS6-D2-YL	1SNK506260R0000	138
ZS6-GN	1SNK506061R0000	81
ZS6-OR	1SNK506030R0000	81
ZS6-PE	1SNK506150R0000	81
ZS6-PR	1SNK506063R0000	81
ZS6-RD	1SNK506062R0000	81
ZS6-S	1SNK506315R0000	109
ZS6-S-4S-T2	1SNK506316R0000	110
ZS6-S-BL	1SNK506322R0000	109
ZS6-WH	1SNK506065R0000	81
ZS6-YL	1SNK506060R0000	81
ZS70	1SNK522010R0000	89
ZS70-BL	1SNK522020R0000	89
ZS70-PE	1SNK522150R0000	89
ZS70-YL	1SNK522060R0000	89
ZS95	1SNK526010R0000	90
ZS95-BL	1SNK526020R0000	90
ZS95-PE	1SNK526150R0000	90
ZS95-YL	1SNK526060R0000	90

Notes

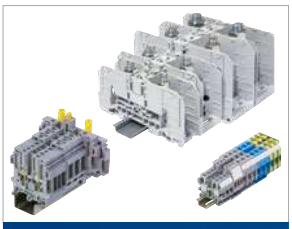

DEDICATED APPLICATIONS TERMINAL BLOCKS

IDC, spring loaded, stud, screw, spring, pluggable technologies

ENTRELEC Terminal Blocks

ENTRELEC Terminal blocks

TE Connectivity proposes one of the largest Din Rail Terminal block offering on the market with various technologies: screw, PI-Spring, spring, IDC, pluggable, stud, etc. found in over 8000 products & solutions.

You can access to more product details, use the order code or the product type in our web site: te.com

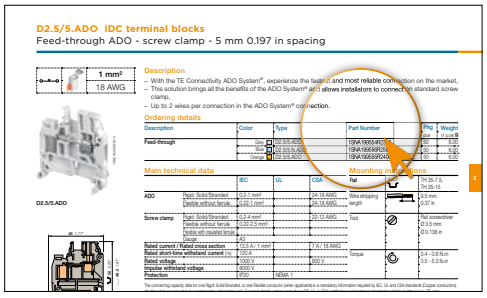

Connect to

1SNC160065S0201

Dedicated applications

Terminal blocks

Connection devices offering 2

ADO System® IDC terminal blocks 11

Spring loaded screw clamp terminal blocks 59

Stud terminal blocks 71

Ring lug terminal blocks 99

Miniblocks 109

Test & measurement terminal blocks 153

Pluggable terminal blocks 173

Sensors / Actuators terminal blocks 189

Installation terminal blocks 207

Protection terminal blocks 237

Disconnect terminal blocks 243

Component holder terminal blocks 251

Index 265

1SNC160065S0201

1-1773977-3_EN - Edition February 2020

TE Connectivity proposes one of the largest Din Rail Terminal block offering on the market with various technologies: screw, PI-Spring, spring, IDC, pluggable, stud, etc. found in over 8000 products & solutions.

	SNK terminal blocks		Dedicated applications terminal blocks		Terminal blocks for railway applications
			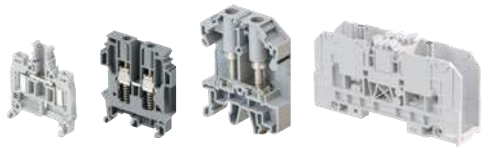		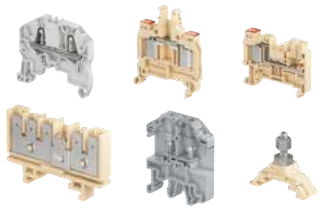
Scope	Qualified for worldwide applications and severe environments (such as hazardous locations, railways, marine and solar applications..). From 0.2 to 300 mm².		Specific terminal blocks and technologies for dedicated applications and markets.		The largest offering on the market for rolling stock and infrastructures.
Product families & functions	SNK PI-Spring technology 2.5 to 16 mm² 12 to 4 AWG	Feed-through Multi-deck Ground Disconnect for fuses Component holder	ADO System® (IDC) 0.22 to 4 mm² 24 to 12 AWG	ADO-ADO or ADO-screw clamp Feed-through / Multi-deck / Ground / Disconnect / for fuses / Component holder	SNK PI-Spring technology 2.5 to 16 mm² 12 to 4 AWG
			Safety (spring loaded) 0.22 to 10 mm² 24 to 6 AWG	Feed-through Disconnect Test & measurement	SNK pluggable screw & PI-Spring technologies 2.5 to 4 mm² 12 to 10 AWG
	SNK screw clamp technology 4 to 240 mm² 12 to 500 Kcmil	Feed-through Multi-deck Ground Disconnect for fuses Test & measurement Marshalling Component holder	Stud 25 to 300 mm² 4 AWG to 1000 Kcmil	One stud 2 studs One stud - One screw clamp	ADO System® (IDC) 1.5 to 4 mm² 16 to 12 AWG
			Ring lug 6 to 16 mm² 8 to 6 AWG	Feed-through Test & measurement	Stud 4 to 185 mm²
	SNK pluggable screw & PI-Spring technologies 2.5 to 4 mm² 12 to 10 AWG	Feed-through Multi-deck Ground	Miniblocks 1.5 to 6 mm² 18 to 8 AWG	Screw clamp Spring ADO System® (IDC)	Quick-connect 2.5 to 6 mm²
			Other types Test & measurement: with sliding link, blade, plug Pluggable: feed-through, double deck, disconnect Sensors/actuators: screw, spring, ADO system (IDC) Installation: screw, spring Protection: ground + neutral Component holders: screw, spring, ADO system (IDC)		

www.te.com

	DBL power distribution blocks	ESSAILEC® test blocks	Interfast PLC pre-wiring system	Marking solutions
	The preferred choice for primary power distribution and solar applications.	Test blocks for safe and easy testing on secondary circuits of current and voltage transformers and sensors.	PLC pre-wiring system for fast, flexible, reliable connection of PLC's in process automation applications.	Markers & marking systems for all identification requirements in electrical panels.
	From 80 A up to 550 A (IEC) Modular blocks: single pole, three & four poles, up to 12 outputs Terminal blocks types: 2 to 10 poles, up to 20 outputs	Current and voltage sockets & plugs Simultaneous testing of 1 to 4 independent circuits on the same socket Several testing principle such as "make before break" for safe current transformer testing Panel and switchboard mounting : base, flush, rack, TH35 rail Multicircuits sockets & plugs	Interfast PCB: Compact & standard modules Interfast MS: Modular system based on terminal block technology Functions: – 1 to 4 wire connections (sensors) – Disconnect – Fuse – Signal indication – Relays – Optocouplers – Solenoid valve control – Galvanic isolation (2.5 kV).	Terminal block identification and group markers Wire and cable identification Component and equipment identification Panel identification Pre-printed markers for terminal blocks

1SNC160261S0201

Screw clamp technology
The heavy duty connection

Unique design, flies over time thanks to its reliability and safety
The TE Connectivity screw clamp technology is designed to avoid accidental releases due to vibrations, shocks or even abusive cable draw. Our exclusive design minimizes the needs of retightening campaigns.

High density capacity
The screw clamp technology can fit up to two conductors per clamp which offers extended possibilities in electrical cabinets.

Features

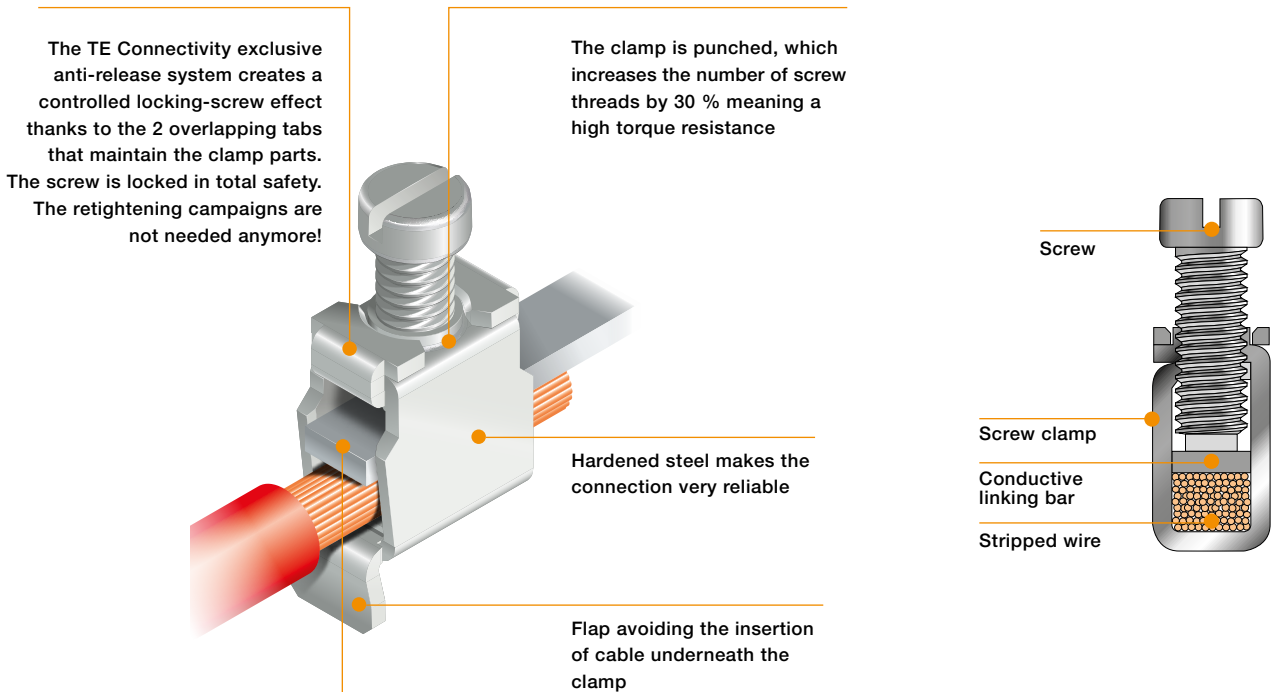

From 0.22 mm² up to 240 mm²
From 24 AWG up to 500 Kcmil

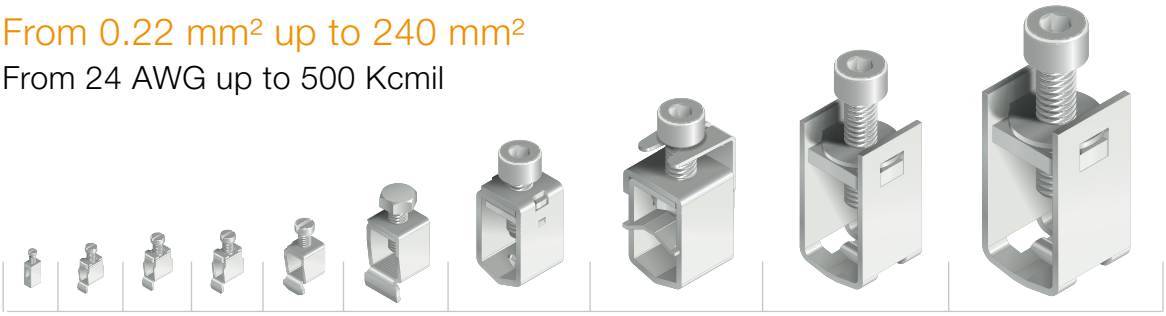

1SNC161117S0201

TE Connectivity spring loaded screw clamp technology

The safety connection for demanding working conditions

Exclusive design provide robustness and connection safety

The TE Connectivity screw clamp spring loaded terminal is designed to guarranty electrical continuity even when screw are loosened unintentionally.
It features all the benefits of our screw clamp with additional vibration,shock resistant and maintenance free performances.

High density wiring

The screw clamp spring loaded terminal can fit up to two conductors equipped with bent ferrules per clamp.

Features

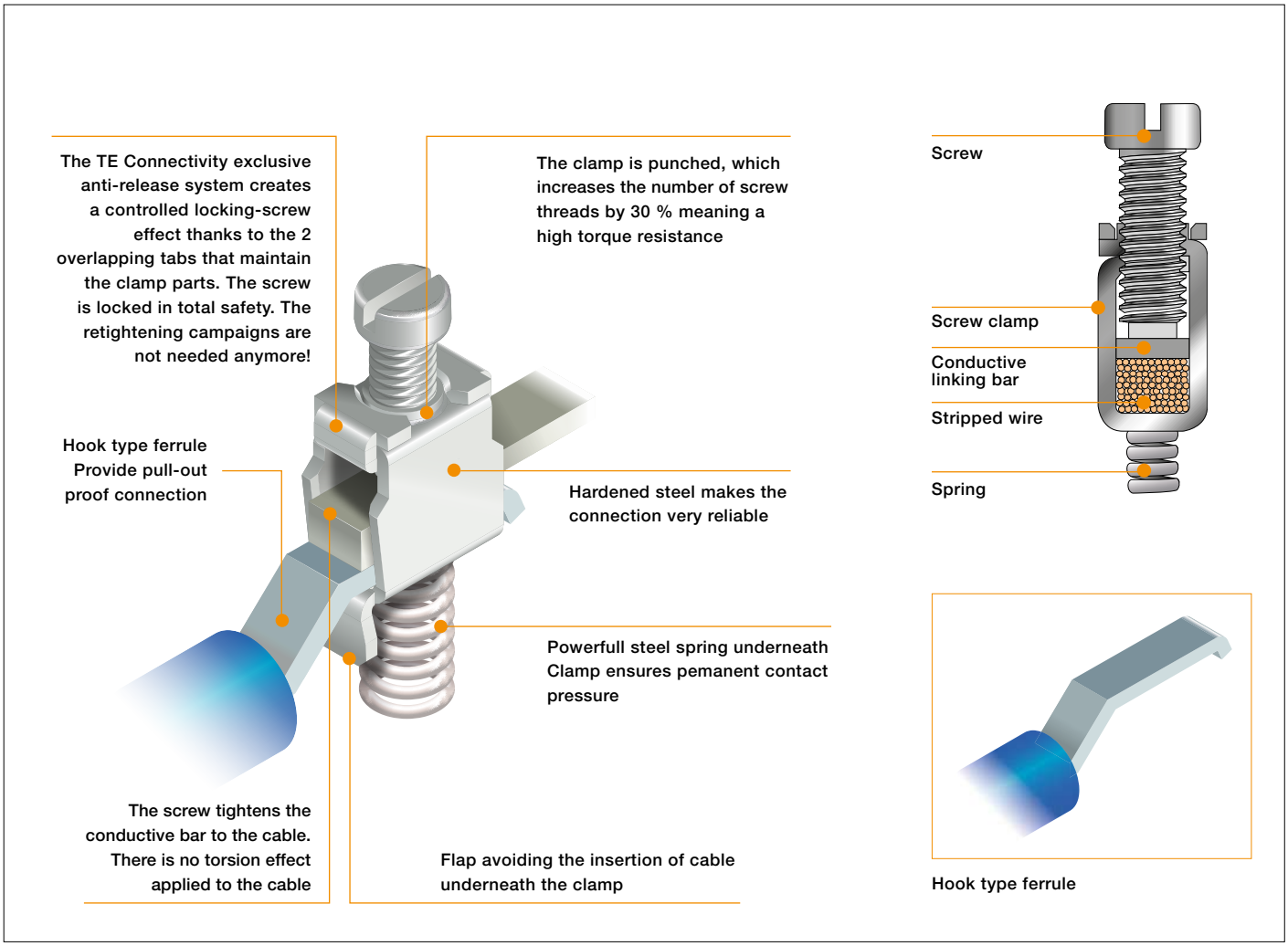

From 0.22 mm² up to 10 mm²

From 24 AWG up to 6 AWG

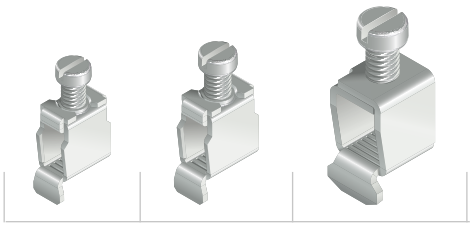

1SNC161123S0201_dupli

Experience the flexible connection

The TE Connectivity spring clamp technology combines all the features appreciated from electrical users by combining flexibility of use with front entry, a good vibration withstand, clamping pressure non dependent on the operator and automatic creeping compensation suppressing the needs of retightening campaigns.

Features

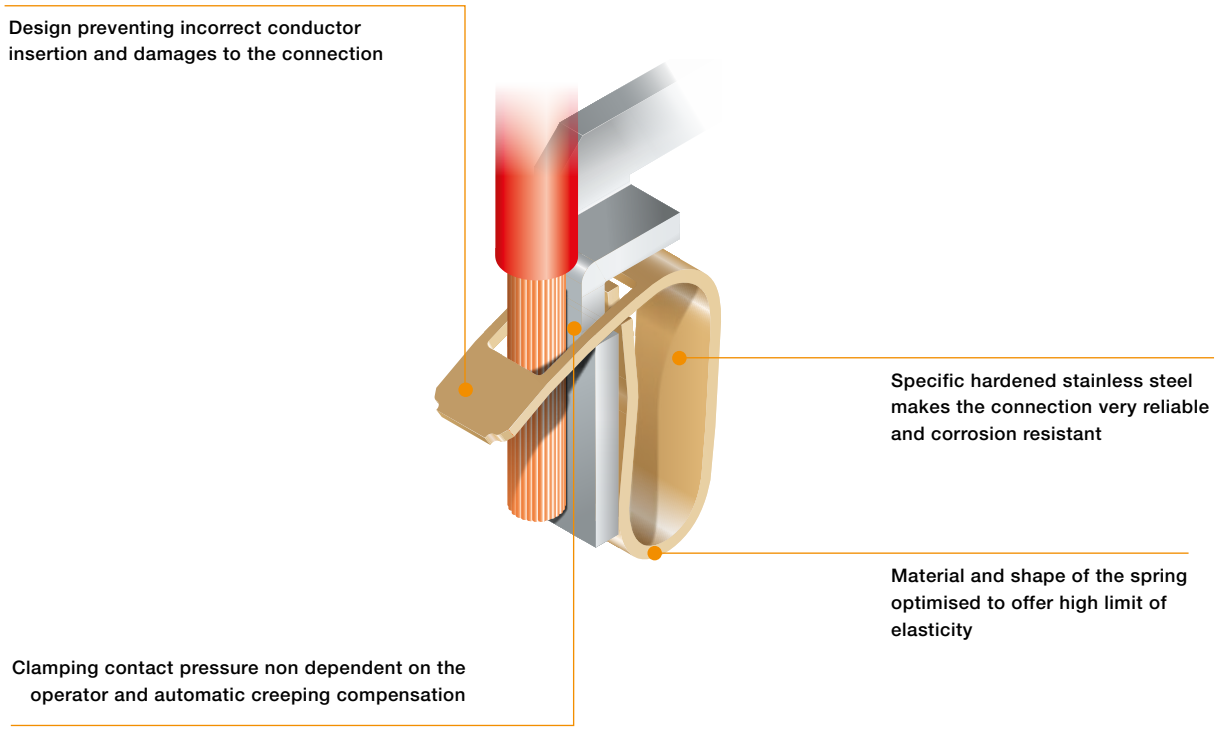

From 0.12 mm² up to 35 mm²

From 26 AWG up to 2 AWG

1SNC162112S0201

ADO System® IDC technology

The fastest and most reliable connection technology

ADO system® is based on Insulation Displacement Connection (IDC) technology. IDC technology can be found in various applications outside the electrical word. (RJ45 connectors used in Telecom for instance).

Our ADO system® features one single piece which (when associated with its dedicated tool) combines the wire preparation and the wire connection. Its design is made to connect up to two conductors (standard wires as well as special wires) in the same jaw.

1

Features

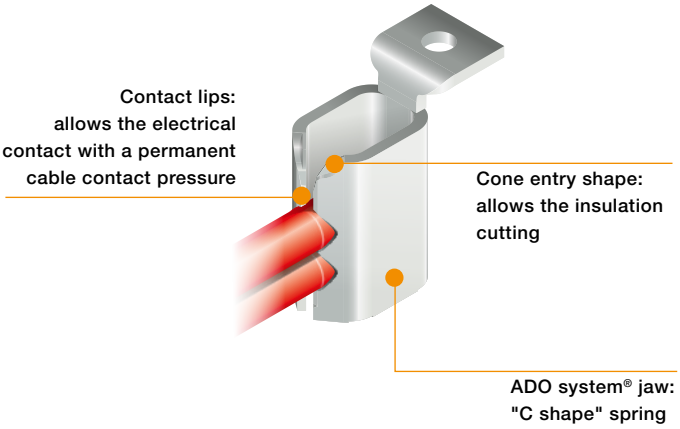

Corrosion proof

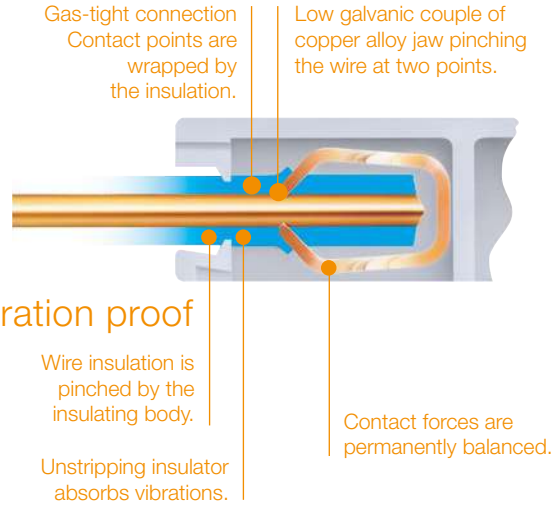

Instructions:

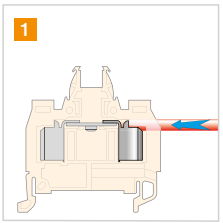

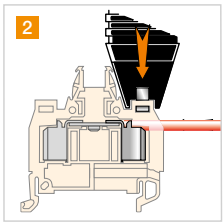

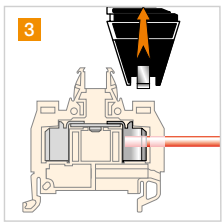

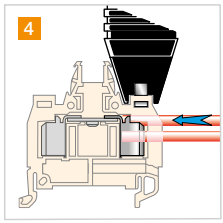

Two conductors

1 Insert the wire (not stripped) in the ADO System® jaw until it butts.
2 Position the tool in the recess and pull the trigger fully and release it.
3 Remove the trigger. (the tool will not be released if the connection is not completed).

4 Follow the same process if a second wire has to be connected (same size and same nature).
The first wire preliminary installed, will remain perfectly and safely maintained in the clamp during the second wire cabling process.

From 0.22 mm² up to 4 mm²

From 24 AWG up to 12 AWG

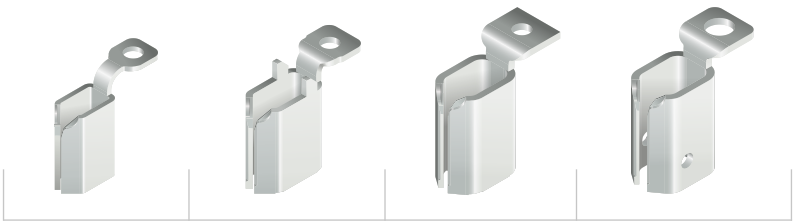

1SNC163080S0201_dupli

TE Connectivity Stud technology
The connection for power and energy circuits

Reliability first

Stud technology is designed to ensure a reliable connection thanks to the combination of:

- Vibration resistant equipments (nuts, washers),
- Lugs crimped on the cable provide pull-out proof termination.

This technology is very popular on the American market and particularly in the energy applications.

Available configurations

One stud

Two studs

One screw clamp / one stud

Connection technics

Up to 300 mm² / 1 000 Kcmil

M4-M5	M6	M8	M10	M12	M16
6 mm²	**35 mm²**	**70 mm²**	**120 mm²**	**185 mm²**	**300 mm²**
8 AWG	1 AWG	000 AWG	300 Kcmil	500 Kcmil	1 000 Kcmil

1SNC165028S0201_dupli

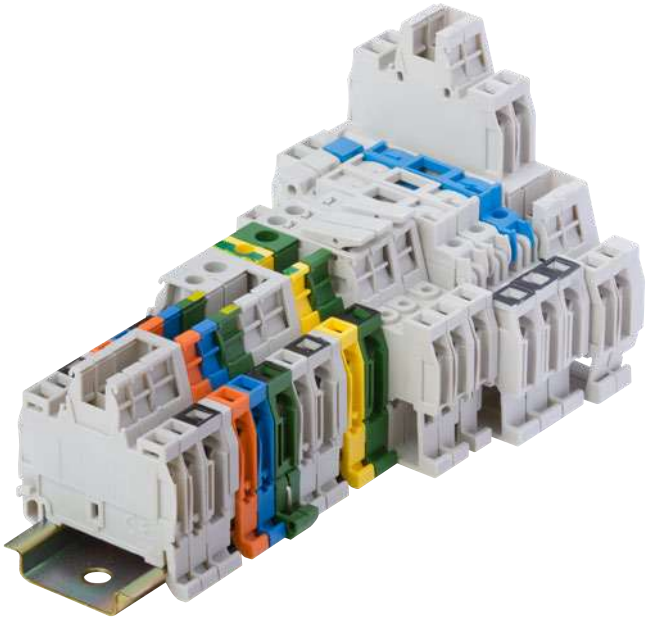

1SNC163102S0201

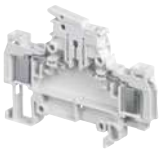

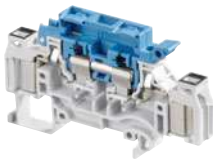

Technologies presentation		12
Overview		14

ADO / screw clamp

Feed-through

1 mm² / 18 AWG	**D2.5/5.ADO**	17
1.5 mm² / 16 AWG	**D4/6.ADO**	18
2.5 mm² / 14 AWG	**D6/8.ADO**	20
4 mm² / 12 AWG	**D6/8.ADO3**	22

Ground

1 mm² / 18 AWG	**D2.5/5.P.ADO**	23
1.5 mm² / 16 AWG	**D4/6.P.ADO**	24
2.5 mm² / 14 AWG	**D6/8.P.ADO**	25
4 mm² / 12 AWG	**D6/8.P.ADO3**	26

Double deck

1.5 mm² / 16 AWG	**D4/6.D2.ADO**	27
2.5 mm² / 14 AWG	**D6/8.D2.ADO**	28

Disconnect with blade

1 mm² / 18 AWG	**D2.5/5.SN.ADO**	29
1.5 mm² / 16 AWG	**D4/6.SN.ADO**	31
2.5 mm² / 14 AWG	**D4/8.SN.ADO**	33

For 5 x 20 and 5 x 25 mm fuse (0.197 x 0.787 in and 0.197 x 0.984 in)

1.5 mm² / 16 AWG	**D4/8.SF...I.ADO**	34 to 36
2.5 mm² / 14 AWG	**D4/8.SF...I.ADO2**	37 to 38

Disconnect with lever

1.5 mm² / 16 AWG	**D4/8.SN...I.ADO**	39
2.5 mm² / 14 AWG	**D4/8.SN...I.ADO2**	40

ADO / ADO

Feed-through

1 mm² / 18 AWG	**D1/5.ADO**	41
1.5 mm² / 16 AWG	**D1.5/6.ADO**	42
2.5 mm² / 14 AWG	**D2.5/8.ADO**	43
4 mm² / 12 AWG	**D4/8.ADO**	44

Ground

1 mm² / 18 AWG	**D1/5.P.ADO**	45
1.5 mm² / 16 AWG	**D1.5/6.P.ADO**	46
2.5 mm² / 14 AWG	**D2.5/8.P.ADO**	47
4 mm² / 12 AWG	**D4/8.P.ADO**	48

Double deck

1.5 mm² / 16 AWG	**D1.5/6.D2.ADO**	49

Disconnect with blade

1 mm² / 18 AWG	**D1/5.SNT2.ADO**	50
1.5 mm² / 16 AWG	**D1.5/6.SNT2.ADO**	51
2.5 mm² / 14 AWG	**D2.5/8.SNT2.ADO**	52

For 5 x 20 and 5 x 25 mm fuse (0.197 x 0.787 in and 0.197 x 0.984 in)

1.5 mm² / 16 AWG	**D1.5/8.SF.ADO**	53 to 54
2.5 mm² / 14 AWG	**D2.5/8.SF.ADO2**	55 to 56

Disconnect with lever

2.5 mm² / 14 AWG	**D4/8.SNNT.ADO2**	57

1SNC163102S0201

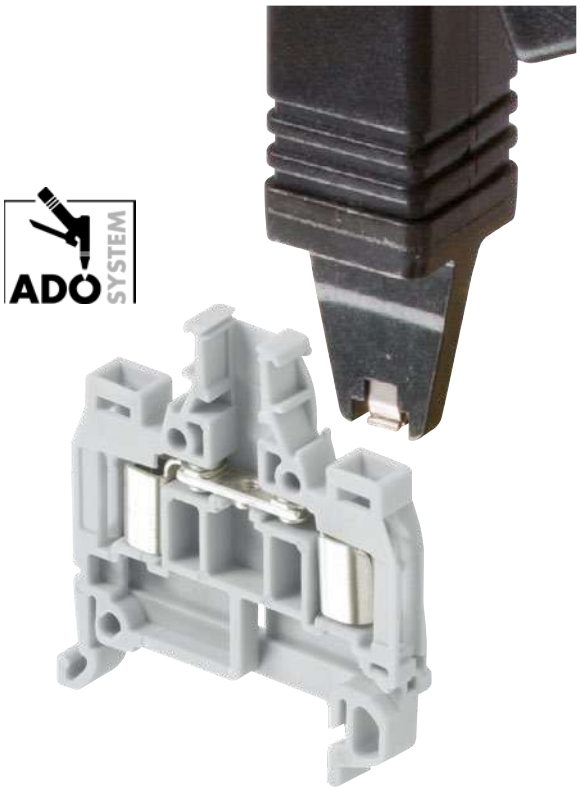

Rely on our expertise

With ADO System®, TE Connectivity is the leader
in IDC technology since 25 years.
More than 4000 customers worldwide are using this technology with sucess in the most severe environments.

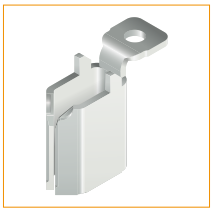

Qualified for worldwide markets and applications
Eco-designed according to international environmental standards in sustainable development.

RoHS ISO 9001

Experience the fastest and the most reliable connection on the market

Secure your connection process
Tool is **locked** on terminal block **during all connection process.** The conductor requires **no preparation** (no stripping, no ferrule). **Maintenance free** (screwless connection).
No fatigue thanks to the use of automatic tool.
Well adapted to special cables.

Speed up your wiring process and reduce time to market!
Reduce wiring time up to 80 % compare to a screw connection with ferrules.
High speed Connection process: **less than 3 seconds!**
No preparation of cable, no tightening, no use of ferrules.
Pneumatic tool available for even faster process.

Trust ADO System® reliability in any environments
ADO System® technology provides **superior performances** and is the best solution for installations with **severe** constraints (continuity of service, clearance for work) as well as strong environmental requirements (**vibrations,corrosion**)
This is the reason why today ADO System® is successfully used in **chemical/petrochemical, traction, waste water treatment** environments.

Connection process secured:
Tool locked on terminal blocks, high speed connection

1SNC163079S0201

ADO System® IDC technology

The fastest and most reliable connection technology

ADO System® is based on Insulation Displacement Connection (IDC) technology. IDC technology can be found in various applications outside the electrical word. (RJ45 connectors used in Telecom for instance).

Our ADO System® features one single piece which (when associated with its dedicated tool) combines the wire preparation and the wire connection. Its design is made to connect up to two conductors (standard wires as well as special wires) in the same jaw.

Features

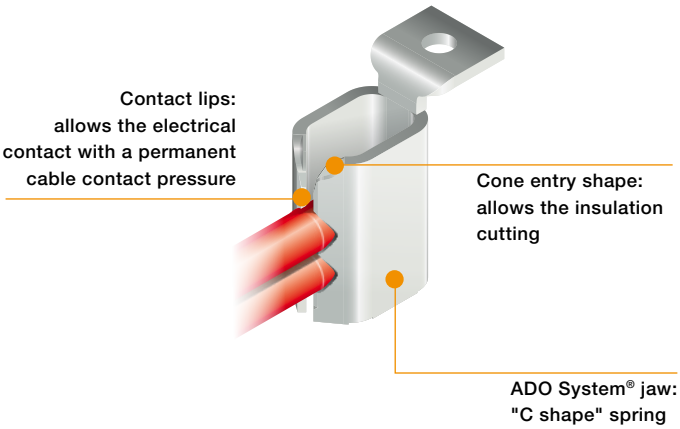

Corrosion proof

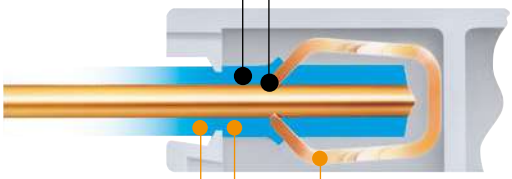

Vibration proof

Wire insulation is pinched by the insulating body.

Unstripping insulator absorbs vibrations.

Contact forces are permanently balanced.

Instructions:

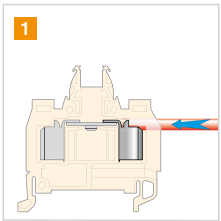

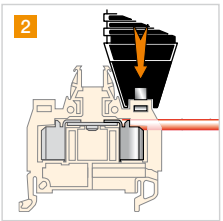

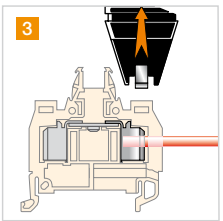

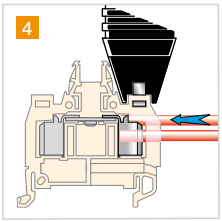

Two conductors

1 Insert the wire (not stripped) in the ADO System® jaw until it butts.
2 Position the tool in the recess and pull the trigger fully and release it.
3 Remove the trigger. (the tool will not be released if the connection is not completed).

4 Follow the same process if a second wire has to be connected (same size and same nature).
The first wire preliminary installed, will remain perfectly and safely maintained in the clamp during the second wire cabling process.

From 0.22 mm² up to 4 mm²

From 24 AWG up to 12 AWG

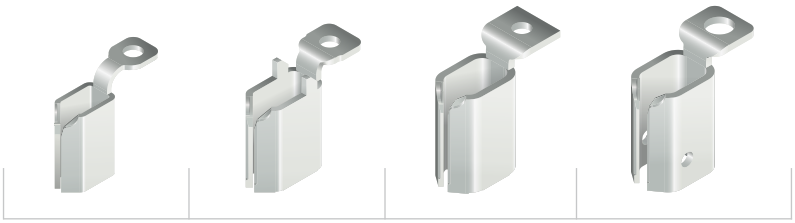

1SNC163080S0201

ADO / screw clamp

Feed-through

Ground

Double deck

Section IEC	UL/CSA*						
1 mm²	18 AWG	D2.5/5.ADO	5 mm 0.197 in	D2.5/5.P.ADO	5 mm 0.197 in		
1.5 mm²	16 AWG	D4/6.ADO	6 mm 0.236 in	D4/6.P.ADO	6 mm 0.236 in	D4/6.D2.ADO	6 mm 0.236 in
2.5 mm²	14 AWG	D6/8.ADO	8 mm 0.315 in	D6/8.P.ADO	8 mm 0.315 in	D6/8.D2.ADO	8 mm 0.315 in
4 mm²	12 AWG	D6/8.ADO3	8 mm 0.315 in	D6/8.P.ADO3	8 mm 0.315 in		

(*) For indication only, refer to product page for certified crosse section.

ADO / ADO

Feed-through

Ground

Double deck

Section IEC	UL/CSA*						
1 mm²	18 AWG	D1/5.ADO	5 mm 0.197 in	D1/5.P.ADO	5 mm 0.197 in		
1.5 mm²	16 AWG	D1.5/6.ADO	6 mm 0.236 in	D1.5/6.P.ADO	6 mm 0.236 in	D1.5/6.D2.ADO	6 mm 0.236 in
2.5 mm²	14 AWG	D2.5/8.ADO	8 mm 0.315 in	D2.5/8.P.ADO	8 mm 0.315 in		
4 mm²	12 AWG	D4/8.ADO	8 mm 0.315 in	D4/8.P.ADO	8 mm 0.315 in		

(*) For indication only, refer to product page for certified crosse section.

Complementary functions: see related chapters in this catalog

Miniblocks

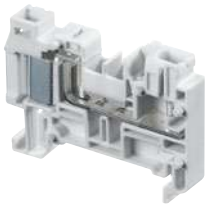

Pluggable

1SNC163081S0201

Disconnect with blade

D2.5/5.SN.ADO	5 mm 0.197 in
D4/6.SN.ADO	6 mm 0.236 in
D4/8.SN.ADO	8 mm 0.315 in

Fuse

D4/8.SF...I.ADO	8 mm 0.315 in
D4/8.SF...I.ADO2	8 mm 0.315 in

Disconnect with lever

D4/8.SN...I.ADO	8 mm 0.315 in
D4/8.SN...I.ADO2	8 mm 0.315 in

Disconnect with blade

D1/5.SNT2.ADO	5 mm 0.197 in
D1.5/6.SNT2.ADO	6 mm 0.236 in
D2.5/8.SNT2.ADO	8 mm 0.315 in

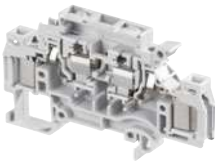

Fuse

D1.5/8.SF.ADO	8 mm 0.315 in
D2.5/8.SF.ADO2	8 mm 0.315 in

Disconnect with lever

D1.5/8.SNN.ADO	8 mm 0.315 in
D2.5/8.SNNT.ADO2	8 mm 0.315 in

Sensors / actuators

Component holders

1SNC163081S0201

D2.5/5.ADO IDC terminal blocks

Feed-through ADO - screw clamp - 5 mm 0.197 in spacing

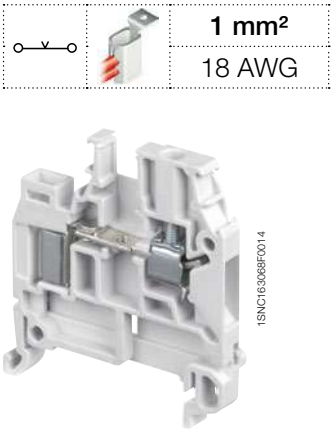

D2.5/5.ADO

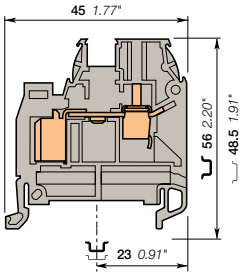

5 mm 0.197 in spacing

1 mm²
18 AWG

Description

- With the TE Connectivity ADO System®, experience the fastest and most reliable connection on the market,
- This solution brings all the benefits of the ADO System® and allows installators to connect on standard screw clamp,
- Up to 2 wires per connection in the ADO System® connection.

Ordering details

Description	Color	Type	Part Number	Pkg pce	Weight (1 pce) g
Feed-through	Grey	D2.5/5.ADO	1SNA199554R2300	50	6.00
	Blue	D2.5/5.N.ADO	1SNA199556R2500	50	6.00
	Orange	D2.5/5.ADO	1SNA199555R2400	50	6.00

Main technical data

		IEC	UL	CSA
ADO	Rigid: Solid/Stranded	0.2-1 mm²		24-18 AWG
	Flexible without ferrule	0.22-1 mm²		24-18 AWG
Screw clamp	Rigid: Solid/Stranded	0.2-4 mm²		22-12 AWG
	Flexible without ferrule	0.22-2.5 mm²		
	Flexible with insulated ferrule			
	Gauge	A3		
Rated current / Rated cross section		13.5 A / 1 mm²		7 A / 18 AWG
Rated short-time withstand current (1s)		120 A		
Rated voltage		1000 V		600 V
Impulse withstand voltage		8000 V		
Protection		IP20	NEMA 1	

Mounting instructions

Rail	TH 35-7.5, TH 35-15
Wire stripping length	9.5 mm 0.37 in
Tool	Flat screwdriver Ø 3.5 mm Ø 0.138 in
Torque	0.4 - 0.6 N.m 3.5 - 5.3 lb.in

The connecting capacity data for one Rigid: Solid/Stranded, or one Flexible conductor (when applicable) is a mandatory information required by IEC, UL and CSA standards (Copper conductors). All other data are provided as supplementary information only. For more details, please consult our CB, UL or CSA certificates and technical datasheet available on http://www.TE.com

RoHS RoHS | cCSAus | Gost R

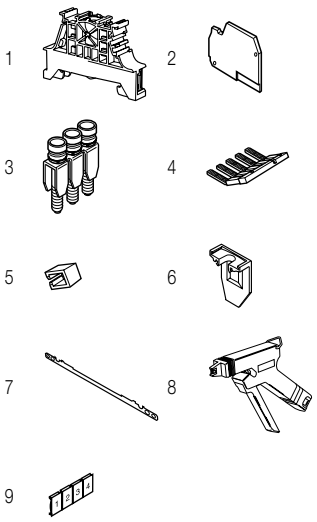

Accessories

	Description			Color	Type	Part Number	Pkg pce	Weight (1 pce) g
1	End stops	10 mm	0.394 in	Dark grey	BAM4	1SNK900001R0000	50	14.00
		5.2 mm	0.205 in		BAZ1	1SNK900002R0000	50	5.30
2	End sections	3 mm	0.118 in	Grey	FEDAD1	1SNA199336R2000	20	2.50
3	Jumper bars	2 poles	24 A		BJMI5-2	1SNA176278R1600	10	3.30
		3 poles			BJMI5-3	1SNA176279R1700	10	5.00
		4 poles			BJMI5-4	1SNA176280R0500	10	6.70
		5 poles			BJMI5-5	1SNA176281R2200	10	8.40
		10 poles			BJMI5-10	1SNA176282R2300	10	16.90
4	Lateral jumper bars	2 poles	30 A	Grey	PC5-2	1SNA113542R1000	10	1.80
		10 poles			PC5-10	1SNA113544R1200	10	6.00
5	Insulating tips	For lateral jumper bars type PC...			EIP	1SNA113550R2400	10	
6	Circuit separators	0 mm	0 in	Grey	SCAD5	1SNA199551R2000	10	0.30
7	Shield connectors				CBM5	1SNA178745R1400	50	
8	Tools	Semi automatic tool			OUPAD	1SNA178944R0400	1	205.00
		Hand tool			OUMAD	1SNA179466R0600	1	29.00
9	Terminal block markers	Blank card		White	RC510	1SNA231000R0700	1	5.20

Complete list of accessories is indicated in the terminal block datasheet.
Some accessories such as jumper bars may modify the terminal block's ratings: complete information in the accessories catalogue pages.

Ground IDC terminal blocks

Description		Color	Type	Part Number	Pkg pce	Weight (1 pce) g
Ground	Profile aligned with D2.5/5.ADO	Green-yellow	D2.5/5.P.ADO	1SNA399030R0500	50	9.00

Technical data valid for copper conductors only.

1SNC163001S0201 - Rev. A

D4/6.ADO IDC terminal blocks

Feed-through ADO - screw clamp - 6 mm 0.236 in spacing

D4/6.ADO

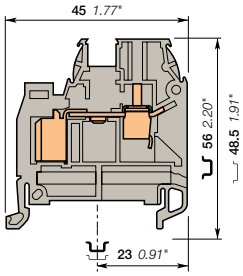

6 mm 0.236 in spacing

Description

- With the TE Connectivity ADO System®, experience the fastest and most reliable connection on the market,
- This solution brings all the benefits of the ADO System® and allows installators to connect on standard screw clamp,
- Up to 2 wires per connection in the ADO System® connection.

Ordering details

Description	Color	Type	Part Number		Pkg pce	Weight (1 pce) g
Feed-through	Grey	D4/6.ADO	1SNA199034R1500		50	7.00
	Blue	D4/6.N.ADO	1SNA199036R1700		50	7.00
	Orange	D4/6.ADO	1SNA199035R1600		50	7.00

Main technical data

		IEC	UL	CSA
ADO	Rigid: Solid/Stranded	0.34-1.5 mm²	22-16 AWG	22-16 AWG
	Flexible without ferrule	0.34-1.5 mm²		
Screw clamp	Rigid: Solid/Stranded	0.2-4 mm²	22-10 AWG	22-10 AWG
	Flexible without ferrule	0.22-4 mm²		
	Flexible with insulated ferrule			
	Gauge	A4		
Rated current / Rated cross section		17.5 A / 1.5 mm²	18 A / 16 AWG	18 A / 16 AWG
Rated short-time withstand current (1s)		180 A		
Rated voltage		1000 V	600 V	600 V
Impulse withstand voltage		8000 V		
Protection		IP20	NEMA 1	

Mounting instructions

Rail	TH 35-7.5, TH 35-15
Wire stripping length	9.5 mm 0.37 in
Tool	Flat screwdriver Ø 4 mm Ø 0.157 in
Torque	0.5 - 0.8 N.m 4.4 - 7.1 lb.in

The connecting capacity data for one Rigid: Solid/Stranded, or one Flexible conductor (when applicable) is a mandatory information required by IEC, UL and CSA standards (Copper conductors). All other data are provided as supplementary information only. For more details, please consult our CB, UL or CSA certificates and technical datasheet available on http://www.TE.com

RoHS / USR CNR / cCSAus / Gost R

Accessories

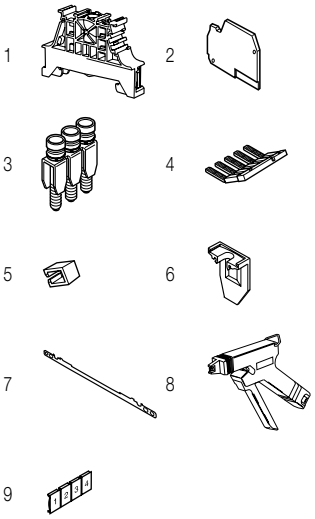

	Description			Color	Type	Part Number		Pkg pce	Weight (1 pce) g
1	**End stops**	10 mm	0.394 in	Dark grey	BAM4	1SNK900001R0000		50	14.00
		5.2 mm	0.205 in		BAZ1	1SNK900002R0000		50	5.30
2	**End sections**	3 mm	0.118 in	Grey	FEDAD1	1SNA199336R2000		20	2.50
3	**Jumper bars**	2 poles	32 A		BJMI6-2	1SNA176663R0000		10	4.40
		3 poles			BJMI6-3	1SNA176664R0100		10	6.70
		4 poles			BJMI6-4	1SNA176665R0200		10	8.90
		5 poles			BJMI6-5	1SNA176666R0300		10	11.20
		10 poles			BJMI6-10	1SNA176667R0400		10	22.40
4	**Lateral jumper bars**	2 poles	35 A	Grey	PC6-2	1SNA113546R1400		10	2.00
		10 poles			PC6-10	1SNA113548R2600		10	8.00
5	**Insulating tips**	For lateral jumper bars type PC...			EIP	1SNA113550R2400		10	
6	**Circuit separators**	0 mm	0 in	Grey	SCAD	1SNA196896R0000		10	
7	**Shield connectors**				CBM5	1SNA178745R1400		50	
8	**Tools**	Semi automatic tool			OUPAD	1SNA178944R0400		1	205.00
		Hand tool			OUMAD	1SNA179466R0600		1	29.00
9	**Terminal block markers**	Blank card		White	RC610	1SNA233000R0100		1	7.50

Complete list of accessories is indicated in the terminal block datasheet.
Some accessories such as jumper bars may modify the terminal block's ratings: complete information in the accessories catalogue pages.

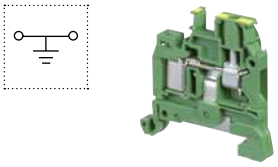

Ground IDC terminal blocks

Description		Color	Type	Part Number		Pkg pce	Weight (1 pce) g
Ground	Profile aligned with D4/6.ADO	Green-yellow	D4/6.P.ADO	1SNA199050R0100		50	11.00

Technical data valid for copper conductors only.

1SNC163002S0201 - Rev. A

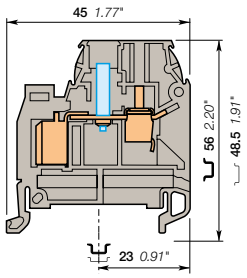

6 mm 0.236 in spacing

1

With test socket DIA 2 mm 0.079 in

Ordering details

Description		Color	Type	Part Number		Pkg pce	Weight (1 pce) g
Feed-through	With test socket DIA 2 mm 0.079 in	Grey	D4/6.ADO.2	1SNA199064R2300		50	8.00

Main technical data	IEC	UL	CSA	Nota
Rated voltage	800 V	600 V	600 V	
Impulse withstand voltage	8000 V			
Protection	IP20	NEMA 1		

The connecting capacity data for one Rigid: Solid/Stranded, or one Flexible conductor (when applicable) is a mandatory information required by IEC, UL and CSA standards (Copper conductors). All other data are provided as supplementary information only. For more details, please consult our CB, UL or CSA certificates and technical datasheet available on http://www.TE.com

RoHS USR CNR cCSAus Gost R

Accessories

	Description		Color	Type	Part Number		Pkg pce	Weight (1 pce) g
1	**Test plugs**	DIA 2 mm 0.079 in	Black	FC2	1SNA007865R2600		100	

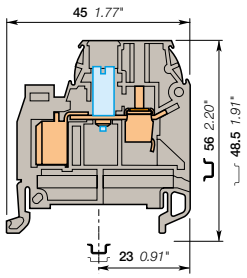

6 mm 0.236 in spacing

1

With test socket DIA 4 mm 0.157 in

Ordering details

Description		Color	Type	Part Number		Pkg pce	Weight (1 pce) g
Feed-through	With test socket DIA 4 mm 0.157 in	Grey	D4/6.ADO.4	1SNA199048R0300		50	8.00

Main technical data	IEC	UL	CSA	Nota
Rated voltage	800 V	600 V	600 V	
Impulse withstand voltage	8000 V			
Protection	IP10	NEMA		

The connecting capacity data for one Rigid: Solid/Stranded, or one Flexible conductor (when applicable) is a mandatory information required by IEC, UL and CSA standards (Copper conductors). All other data are provided as supplementary information only. For more details, please consult our CB, UL or CSA certificates and technical datasheet available on http://www.TE.com

RoHS USR CNR cCSAus Gost R

Accessories

	Description		Color	Type	Part Number		Pkg pce	Weight (1 pce) g
1	**Test plugs**	DIA 4 mm 0.157 in	White	FC4	1SNA167860R0100		10	10.00

Technical data valid for copper conductors only.

1SNC163003S0201 - Rev. A

D6/8.ADO IDC terminal blocks

Feed-through ADO - screw clamp - 8 mm 0.315 in spacing

D6/8.ADO

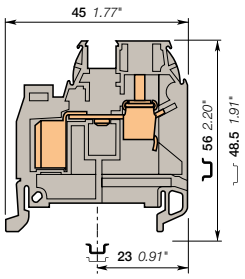

8 mm 0.315 in spacing

2.5 mm²
14 AWG

Description

- With the TE Connectivity ADO System®, experience the fastest and most reliable connection on the market,
- This solution brings all the benefits of the ADO System® and allows installators to connect on standard screw clamp,
- Up to 2 wires per connection in the ADO System® connection.

Ordering details

Description		Color	Type	Part Number		Pkg pce	Weight (1 pce) g
Feed-through	With black marking for wire size 1-2.5 mm² (16-14 AWG)	Grey	D6/8.ADO	1SNA199042R2500		50	11.00
		Blue	D6/8.N.ADO	1SNA199044R2700		50	11.00
		Orange	D6/8.ADO	1SNA199043R2600		50	11.00

Main technical data

		IEC	UL	CSA
ADO	Rigid: Solid/Stranded	1-2.5 mm²	16-14 AWG	16-14 AWG
	Flexible without ferrule	1-2.5 mm²		
Screw clamp	Rigid: Solid/Stranded	0.2-10 mm²	22-8 AWG	22-8 AWG
	Flexible without ferrule	0.22-6 mm²		
	Flexible with insulated ferrule			
	Gauge	A5		
Rated current / Rated cross section		24 A / 2.5 mm²	25 A / 14 AWG	25 A / 14 AWG
Rated short-time withstand current (1s)		300 A		
Rated voltage		1000 V	600 V	600 V
Impulse withstand voltage		8000 V		
Protection		IP20	NEMA 1	

Mounting instructions

Rail	TH 35-7.5, TH 35-15
Wire stripping length	12 mm 0.47 in
Tool	Flat screwdriver Ø 4 - 5 mm Ø 0.157 - 0.197 in
Torque	0.8 - 1 N.m 7.1 - 8.9 lb.in

The connecting capacity data for one Rigid: Solid/Stranded, or one Flexible conductor (when applicable) is a mandatory information required by IEC, UL and CSA standards (Copper conductors). All other data are provided as supplementary information only. For more details, please consult our CB, UL or CSA certificates and technical datasheet available on http://www.TE.com

RoHS USR CNR cCSAus Gost R

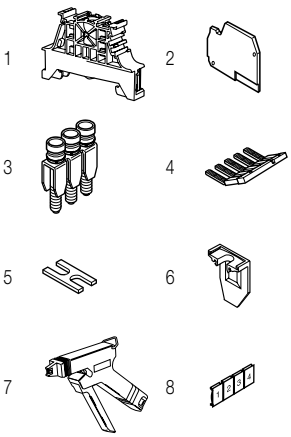

Accessories

	Description			Color	Type	Part Number		Pkg pce	Weight (1 pce) g
1	**End stops**	10 mm	0.394 in	Dark grey	BAM4	1SNK900001R0000		50	14.00
		5.2 mm	0.205 in		BAZ1	1SNK900002R0000		50	5.30
2	**End sections**	3 mm	0.118 in	Grey	FEDAD1	1SNA199336R2000		20	2.50
3	**Jumper bars**	2 poles	41 A		BJMI8-2	1SNA176669R1600		10	4.50
		3 poles			BJMI8-3	1SNA176670R1300		10	6.00
		4 poles			BJMI8-4	1SNA176671R0000		10	10.00
		5 poles			BJMI8-5	1SNA176672R0100		10	12.22
		10 poles			BJMI8-10	1SNA176673R0200		10	20.00
4	**Lateral jumper bars**	2 poles	50 A		PC8-2	1SNA116538R1700		10	3.00
		10 poles			PC8-10	1SNA163313R2400		10	14.00
5	**Cross spacing jumpers**	5 mm 0.200 in - 6 mm 0.236 in - 8 mm 0.315 in			EL6	1SNA173627R2100		10	0.10
		Universal screw jumper bar kit N°I			BJDP1	1SNA179623R0300		10	7.00
		Universal screw jumper bar kit N°III			BJDP3	1SNA179625R0500		10	5.00
6	**Circuit separators**	0 mm	0 in	Grey	SCAD	1SNA196896R0000		10	
7	**Tools**	Semi automatic tool			OUPAD	1SNA178944R0400		1	205.00
		Hand tool			OUMAD	1SNA179466R0600		1	29.00
8	**Terminal block markers**	Blank card		White	RC810	1SNA234000R0200		1	8.20

Complete list of accessories is indicated in the terminal block datasheet.
Some accessories such as jumper bars may modify the terminal block's ratings: complete information in the accessories catalogue pages.

Ground IDC terminal blocks

Description		Color	Type	Part Number		Pkg pce	Weight (1 pce) g
Ground	Profile aligned with D6/8.ADO	Green-yellow	D6/8.P.ADO	1SNA199118R2600		50	14.00

Technical data valid for copper conductors only.

1SNC163004S0201 - Rev. A

2.5 mm²
14 AWG

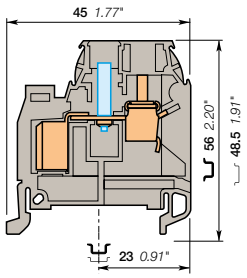

8 mm 0.315 in spacing

1

With test socket DIA 2 mm 0.079 in

Ordering details

Description		Color	Type	Part Number		Pkg pce	Weight (1 pce) g
Feed-through	With test socket DIA 2 mm 0.079 in and black marking for wire size 1-2.5 mm² (16-14 AWG)	Grey	D6/8.ADO.2	1SNA199155R2300		50	12.00

Main technical data	IEC	UL	CSA	Nota
Rated voltage	1000 V	600 V	600 V	
Impulse withstand voltage	8000 V			
Protection	IP20	NEMA 1		

The connecting capacity data for one Rigid: Solid/Stranded, or one Flexible conductor (when applicable) is a mandatory information required by IEC, UL and CSA standards (Copper conductors). All other data are provided as supplementary information only. For more details, please consult our CB, UL or CSA certificates and technical datasheet available on http://www.TE.com

RoHS RoHS · USR CNR · cCSAus · Gost R

Accessories

	Description		Color	Type	Part Number		Pkg pce	Weight (1 pce) g
1	**Test plugs**	DIA 2 mm 0.079 in	Black	FC2	1SNA007865R2600		100	

2.5 mm²
14 AWG

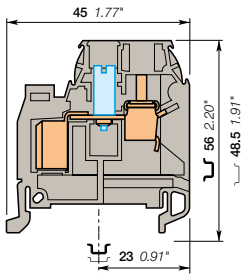

8 mm 0.315 in spacing

1

With test socket DIA 4 mm 0.157 in

Ordering details

Description		Color	Type	Part Number		Pkg pce	Weight (1 pce) g
Feed-through	With test socket DIA 4 mm 0.157 in and black marking for wire size 1-2.5 mm² (16-14 AWG)	Grey	D6/8.ADO.4	1SNA199157R2500		50	12.00

Main technical data	IEC	UL	CSA	Nota
Rated voltage	800 V	600 V	600 V	
Impulse withstand voltage	8000 V			
Protection	IP10	NEMA		

The connecting capacity data for one Rigid: Solid/Stranded, or one Flexible conductor (when applicable) is a mandatory information required by IEC, UL and CSA standards (Copper conductors). All other data are provided as supplementary information only. For more details, please consult our CB, UL or CSA certificates and technical datasheet available on http://www.TE.com

RoHS RoHS · USR CNR · cCSAus · Gost R

Accessories

	Description		Color	Type	Part Number		Pkg pce	Weight (1 pce) g
1	**Test plugs**	DIA 4 mm 0.157 in	White	FC4	1SNA167860R0100		10	10.00

Technical data valid for copper conductors only.

1SNC163005S0201 - Rev. A

D6/8.ADO IDC terminal blocks

Feed-through ADO - screw clamp - 8 mm 0.315 in spacing

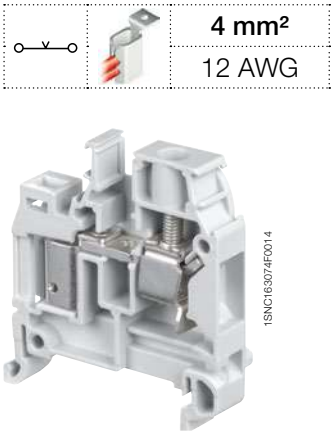

4 mm²
12 AWG

D6/8.ADO

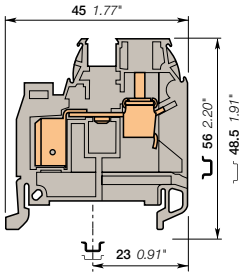

8 mm 0.315 in spacing

Description

- With the TE Connectivity ADO System®, experience the fastest and most reliable connection on the market,
- This solution brings all the benefits of the ADO System® and allows installators to connect on standard screw clamp.

Ordering details

Description		Color	Type	Part Number		Pkg pce	Weight (1 pce) g
Feed-through	With white marking for wire size 4 mm2 (12 AWG)	Grey	D6/8.ADO3	1SNA399245R1500		50	11.00
		Blue	D6/8.N.ADO3	1SNA399319R1700		50	11.00
		Orange	D6/8.ADO3	1SNA399800R1700		50	11.00

Main technical data

		IEC	UL	CSA
ADO	Rigid: Solid/Stranded	4 mm²		12 AWG
	Flexible without ferrule	4 mm²		12 AWG
Screw clamp	Rigid: Solid/Stranded	0.2-10 mm²		22-8 AWG
	Flexible without ferrule	0.22-6 mm²		
	Flexible with insulated ferrule			
	Gauge	A5		
Rated current / Rated cross section		32 A / 4 mm²		25 A / 12 AWG
Rated short-time withstand current (1s)		480 A		
Rated voltage		1000 V		600 V
Impulse withstand voltage		8000 V		
Protection		IP20	NEMA 1	

Mounting instructions

Rail	TH 35-7.5, TH 35-15
Wire stripping length	12 mm 0.47 in
Tool	Flat screwdriver Ø 4 - 5 mm Ø 0.157 - 0.197 in
Torque	0.8 - 1 N.m 7.1 - 8.9 lb.in

The connecting capacity data for one Rigid: Solid/Stranded, or one Flexible conductor (when applicable) is a mandatory information required by IEC, UL and CSA standards (Copper conductors). All other data are provided as supplementary information only. For more details, please consult our CB, UL or CSA certificates and technical datasheet available on http://www.TE.com

RoHS RoHS | cCSAus | Gost R

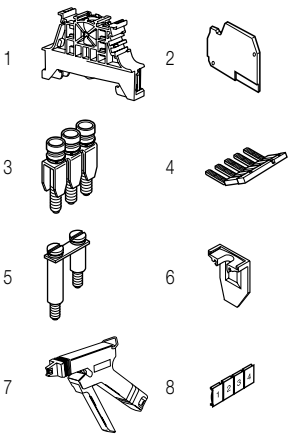

Accessories

	Description			Color	Type	Part Number		Pkg pce	Weight (1 pce) g
1	**End stops**	10 mm	0.394 in	Dark grey	BAM4	1SNK900001R0000		50	14.00
		5.2 mm	0.205 in		BAZ1	1SNK900002R0000		50	5.30
2	**End sections**	3 mm	0.118 in	Grey	FEDAD1	1SNA199336R2000		20	2.50
3	**Jumper bars**	2 poles	41 A		BJMI8-2	1SNA176669R1600		10	4.50
		3 poles			BJMI8-3	1SNA176670R1300		10	6.00
		4 poles			BJMI8-4	1SNA176671R0000		10	10.00
		5 poles			BJMI8-5	1SNA176672R0100		10	12.22
		10 poles			BJMI8-10	1SNA176673R0200		10	20.00
4	**Lateral jumper bars**	2 poles	50 A		PC8-2	1SNA116538R1700		10	3.00
		10 poles			PC8-10	1SNA163313R2400		10	14.00
5	**Cross spacing jumpers**	Universal screw jumper bar kit N°I			BJDP1	1SNA179623R0300		10	7.00
		Universal screw jumper bar kit N°III			BJDP3	1SNA179625R0500		10	5.00
6	**Circuit separators**	0 mm	0 in	Grey	SCAD	1SNA196896R0000		10	
7	**Tools**	Semi automatic tool			OUPAD	1SNA178944R0400		1	205.00
		Hand tool			OUMAD	1SNA179466R0600		1	29.00
8	**Terminal block markers**	Blank card		White	RC810	1SNA234000R0200		1	8.20

Complete list of accessories is indicated in the terminal block datasheet.
Some accessories such as jumper bars may modify the terminal block's ratings: complete information in the accessories catalogue pages.

Ground IDC terminal blocks

Description		Color	Type	Part Number		Pkg pce	Weight (1 pce) g
Ground	Profile aligned with D6/8 ADO	Green-yellow	D6/8.P.ADO3	1SNA399251R1300		50	14.00

Technical data valid for copper conductors only.

1SNC163006S0201 - Rev. A

D2.5/5.P.ADO IDC terminal blocks

Ground ADO - screw clamp - 5 mm 0.197 in spacing

D2.5/5.P.ADO

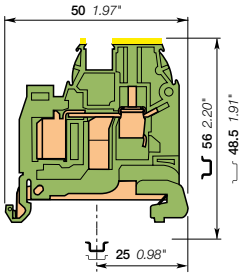

5 mm 0.197 in spacing

	1 mm²
	18 AWG

Description

- Protect your installation in the event of a short-circuit thanks to our screwless rail contact non operator dependent,
- Secure mounting or removal from the rail,
- This solution brings all the benefits of the ADO System® and allows installators to connect on standard screw clamp,
- Up to 2 wires per connection in the ADO System® connection.

Ordering details

Description		Color	Type	Part Number		Pkg pce	Weight (1 pce) g
Ground	Screwless rail connection	Green-yellow	D2.5/5.P.ADO	1SNA399030R0500		50	9.00

Main technical data

		IEC	UL	CSA
ADO	Rigid: Solid/Stranded	0.2-1 mm²		24-18 AWG
	Flexible without ferrule	0.22-1 mm²		
Screw clamp	Rigid: Solid/Stranded	0.2-4 mm²		22-12 AWG
	Flexible without ferrule	0.22-2.5 mm²		
	Flexible with insulated ferrule			
	Gauge	A3		
Rated cross section		1 mm²		18 AWG
Rated short-time withstand current (1s)		120 A		
Protection		IP20	NEMA 1	

Mounting instructions

Rail	TH 35-7.5, TH 35-15
Wire stripping length	9.5 mm 0.37 in
Tool	Flat screwdriver Ø 3.5 mm Ø 0.138 in
Torque	0.4 - 0.6 N.m 3.5 - 5.3 lb.in

The connecting capacity data for one Rigid: Solid/Stranded, or one Flexible conductor (when applicable) is a mandatory information required by IEC, UL and CSA standards (Copper conductors). All other data are provided as supplementary information only. For more details, please consult our CB, UL or CSA certificates and technical datasheet available on http://www.TE.com

RoHS cCSAus Gost R

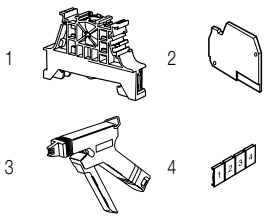

Accessories

	Description		Color	Type	Part Number		Pkg pce	Weight (1 pce) g
1	**End stops**	10 mm 0.394 in	Dark grey	BAM4	1SNK900001R0000		50	14.00
		5.2 mm 0.205 in		BAZ1	1SNK900002R0000		50	5.30
2	**End sections**	3 mm 0.118 in	Grey	FEDAD1	1SNA199336R2000		20	2.50
3	**Tools**	Semi automatic tool		OUPAD	1SNA178944R0400		1	205.00
		Hand tool		OUMAD	1SNA179466R0600		1	29.00
4	**Terminal block markers**	Blank card	White	RC510	1SNA231000R0700		1	5.20

Complete list of accessories is indicated in the terminal block datasheet.
Some accessories such as jumper bars may modify the terminal block's ratings: complete information in the accessories catalogue pages.

Technical data valid for copper conductors only.

1SNC163009S0201 - Rev. A

D4/6.P.ADO IDC terminal blocks

Ground ADO - screw clamp - 6 mm 0.236 in spacing

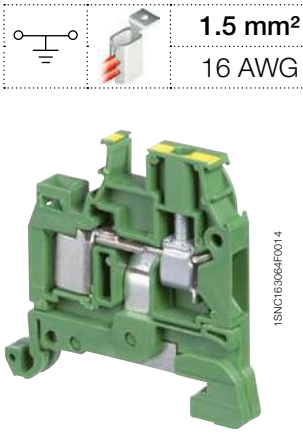

D4/6.P.ADO

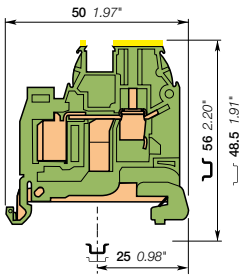

6 mm 0.236 in spacing

1.5 mm²
16 AWG

Description

- Protect your installation in the event of a short-circuit thanks to our screwless rail contact non operator dependent,
- Secure mounting or removal from the rail,
- This solution brings all the benefits of the ADO System® and allows installators to connect on standard screw clamp,
- Up to 2 wires per connection in the ADO System® connection.

Ordering details

Description		Color	Type	Part Number		Pkg pce	Weight (1 pce) g
Ground	Screwless rail connection	Green-yellow	D4/6.P.ADO	1SNA199050R0100		50	11.00

Main technical data

		IEC	UL	CSA
ADO	Rigid: Solid/Stranded	0.34-1.5 mm²	22-16 AWG	22-16 AWG
	Flexible without ferrule	0.34-1.5 mm²		
Screw clamp	Rigid: Solid/Stranded	0.2-4 mm²	22-10 AWG	22-10 AWG
	Flexible without ferrule	0.22-4 mm²		
	Flexible with insulated ferrule			
	Gauge	A4		
Rated cross section		1.5 mm²	16 AWG	16 AWG
Rated short-time withstand current (1s)		180 A		
Protection		IP20	NEMA 1	

Mounting instructions

Rail	TH 35-7.5, TH 35-15
Wire stripping length	9.5 mm 0.37 in
Tool	Flat screwdriver Ø 4 mm Ø 0.157 in
Torque	0.5 - 0.8 N.m 4.4 - 7.1 lb.in

The connecting capacity data for one Rigid: Solid/Stranded, or one Flexible conductor (when applicable) is a mandatory information required by IEC, UL and CSA standards (Copper conductors). All other data are provided as supplementary information only. For more details, please consult our CB, UL or CSA certificates and technical datasheet available on http://www.TE.com

RoHS USR CNR cCSAus Gost R

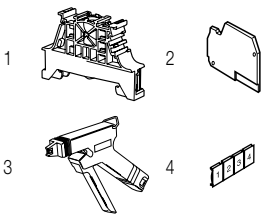

Accessories

	Description		Color	Type	Part Number		Pkg pce	Weight (1 pce) g
1	**End stops**	10 mm 0.394 in	Dark grey	BAM4	1SNK900001R0000		50	14.00
		5.2 mm 0.205 in		BAZ1	1SNK900002R0000		50	5.30
2	**End sections**	3 mm 0.118 in	Grey	FEDAD1	1SNA199336R2000		20	2.50
3	**Tools**	Semi automatic tool		OUPAD	1SNA178944R0400		1	205.00
		Hand tool		OUMAD	1SNA179466R0600		1	29.00
4	**Terminal block markers**	Blank card	White	RC610	1SNA233000R0100		1	7.50

Complete list of accessories is indicated in the terminal block datasheet.
Some accessories such as jumper bars may modify the terminal block's ratings: complete information in the accessories catalogue pages.

Technical data valid for copper conductors only.

1SNC163010S0201 - Rev. A

D6/8.P.ADO IDC terminal blocks

Ground ADO - screw clamp - 8 mm 0.315 in spacing

2.5 mm²
14 AWG

1SNC163135F0014

D6/8.P.ADO

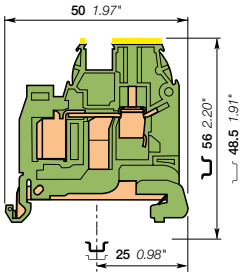

8 mm 0.315 in spacing

Description

- Protect your installation in the event of a short-circuit thanks to our screwless rail contact non operator dependent,
- Secure mounting or removal from the rail,
- This solution brings all the benefits of the ADO System® and allows installators to connect on standard screw clamp,
- Up to 2 wires per connection in the ADO System® connection.

Ordering details

Description		Color	Type	Part Number		Pkg pce	Weight (1 pce) g
Ground	Screwless rail connection, with black marking for wire size 1-2.5 mm² (16-14 AWG)	Green-yellow	D6/8.P.ADO	1SNA199118R2600		50	14.00

Main technical data

		IEC	UL	CSA
ADO	Rigid: Solid/Stranded	1-2.5 mm²	16-14 AWG	16-14 AWG
	Flexible without ferrule	1-2.5 mm²		
Screw clamp	Rigid: Solid/Stranded	0.2-10 mm²	22-8 AWG	22-8 AWG
	Flexible without ferrule	0.22-6 mm²		
	Flexible with insulated ferrule			
	Gauge	A5		
Rated cross section		2.5 mm²	14 AWG	14 AWG
Rated short-time withstand current (1s)		300 A		
Protection		IP20	NEMA 1	

Mounting instructions

Rail		TH 35-7.5, TH 35-15
Wire stripping length		12 mm 0.47 in
Tool		Flat screwdriver Ø 4 - 5 mm Ø 0.157 - 0.197 in
Torque		0.8 - 1 N.m 7.1 - 8.9 lb.in

The connecting capacity data for one Rigid: Solid/Stranded, or one Flexible conductor (when applicable) is a mandatory information required by IEC, UL and CSA standards (Copper conductors). All other data are provided as supplementary information only. For more details, please consult our CB, UL or CSA certificates and technical datasheet available on http://www.TE.com

RoHS USR CNR cCSAus Gost R

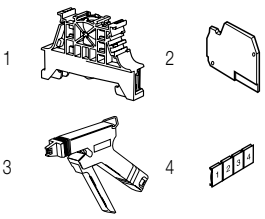

Accessories

	Description			Color	Type	Part Number		Pkg pce	Weight (1 pce) g
1	**End stops**	10 mm	0.394 in	Dark grey	BAM4	1SNK900001R0000		50	14.00
		5.2 mm	0.205 in		BAZ1	1SNK900002R0000		50	5.30
2	**End sections**	3 mm	0.118 in	Grey	FEDAD1	1SNA199336R2000		20	2.50
3	**Tools**	Semi automatic tool			OUPAD	1SNA178944R0400		1	205.00
		Hand tool			OUMAD	1SNA179466R0600		1	29.00
4	**Terminal block markers**	Blank card		White	RC810	1SNA234000R0200		1	8.20

Complete list of accessories is indicated in the terminal block datasheet.
Some accessories such as jumper bars may modify the terminal block's ratings: complete information in the accessories catalogue pages.

Technical data valid for copper conductors only.

1SNC163011S0201 - Rev. A

D6/8.P.ADO IDC terminal blocks

Ground ADO - screw clamp - 8 mm 0.315 in spacing

4 mm²
12 AWG

D6/8.P.ADO

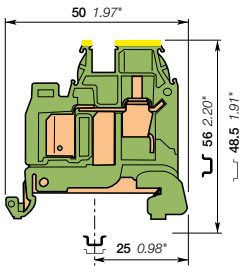

8 mm 0.315 in spacing

Description

- Protect your installation in the event of a short-circuit thanks to our screwless rail contact non operator dependent,
- Secure mounting or removal from the rail,
- This solution brings all the benefits of the ADO System® and allows installators to connect on standard screw clamp.

Ordering details

Description		Color	Type	Part Number		Pkg pce	Weight (1 pce) g
Ground	Screwless rail connection, with white marking for wire size 4 mm² (12 AWG)	Green-yellow	D6/8.P.ADO3	1SNA399251R1300		50	14.00

Main technical data

		IEC	UL	CSA
ADO	Rigid: Solid/Stranded	4 mm²		12 AWG
	Flexible without ferrule	4 mm²		
Screw clamp	Rigid: Solid/Stranded	0.2-10 mm²		22-8 AWG
	Flexible without ferrule	0.22-6 mm²		
	Flexible with insulated ferrule			
	Gauge	A5		
Rated cross section		4 mm²		12 AWG
Rated short-time withstand current (1s)		480 A		
Protection		IP20	NEMA 1	

Mounting instructions

Rail		TH 35-7.5, TH 35-15
Wire stripping length		12 mm 0.47 in
Tool		Flat screwdriver Ø 4 - 5 mm Ø 0.157 - 0.197 in
Torque		0.8 - 1 N.m 7.1 - 8.9 lb.in

The connecting capacity data for one Rigid: Solid/Stranded, or one Flexible conductor (when applicable) is a mandatory information required by IEC, UL and CSA standards (Copper conductors). All other data are provided as supplementary information only. For more details, please consult our CB, UL or CSA certificates and technical datasheet available on http://www.TE.com

RoHS cCSAus Gost R

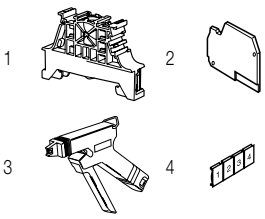

Accessories

	Description			Color	Type	Part Number		Pkg pce	Weight (1 pce) g
1	**End stops**	10 mm	0.394 in	Dark grey	BAM4	1SNK900001R0000		50	14.00
		5.2 mm	0.205 in		BAZ1	1SNK900002R0000		50	5.30
2	**End sections**	3 mm	0.118 in	Grey	FEDAD1	1SNA199336R2000		20	2.50
3	**Tools**	Semi automatic tool			OUPAD	1SNA178944R0400		1	205.00
		Hand tool			OUMAD	1SNA179466R0600		1	29.00
4	**Terminal block markers**	Blank card		White	RC810	1SNA234000R0200		1	8.20

Complete list of accessories is indicated in the terminal block datasheet.
Some accessories such as jumper bars may modify the terminal block's ratings: complete information in the accessories catalogue pages.

Technical data valid for copper conductors only.

1SNC163012S0201 - Rev. A

D4/6.D2.ADO IDC terminal blocks

Double deck ADO - screw clamp - 6 mm 0.236 in spacing

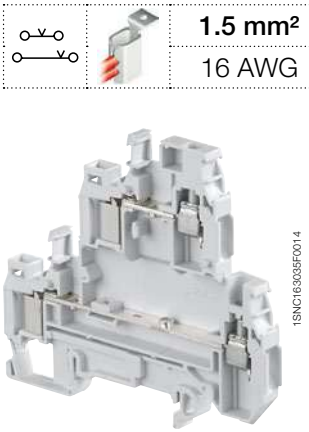

D4/6.D2.ADO

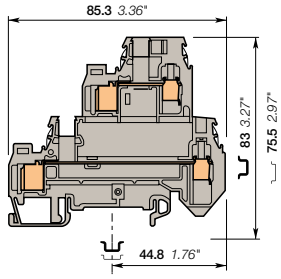

6 mm 0.236 in spacing

	1.5 mm²
	16 AWG

Description

- Save space with 2 decks terminal block,
- With the TE Connectivity ADO System®, experience the fastest and most reliable connection on the market,
- This solution brings all the benefits of the ADO System® and allows installators to connect on standard screw clamp,
- Up to 2 wires per connection in the ADO System® connection.

Ordering details

Description		Color	Type	Part Number		Pkg pce	Weight (1 pce) g
Feed-through	With 2 feed-through circuits	Grey	D4/6.D2.ADO	1SNA199242R0200		50	18.00
		Blue	D4/6.D2.N.ADO	1SNA199244R0400		50	18.00

Main technical data

		IEC	UL	CSA
ADO	Rigid: Solid/Stranded	0.28-1.5 mm²		22-16 AWG
	Flexible without ferrule	0.34-1.5 mm²		
Screw clamp	Rigid: Solid/Stranded	0.2-4 mm²		22-10 AWG
	Flexible without ferrule	0.22-4 mm²		
	Flexible with insulated ferrule			
	Gauge	A4		
Rated current / Rated cross section		17.5 A / 1.5 mm²		18 A / 16 AWG
Rated short-time withstand current (1s)		180 A		
Rated voltage		800 V		600 V
Impulse withstand voltage		6000 V		
Protection		IP20	NEMA 1	

The connecting capacity data for one Rigid: Solid/Stranded, or one Flexible conductor (when applicable) is a mandatory information required by IEC, UL and CSA standards (Copper conductors). All other data are provided as supplementary information only. For more details, please consult our CB, UL or CSA certificates and technical datasheet available on http://www.TE.com

RoHS cCSAus Gost R

Mounting instructions

Rail	TH 35-7.5, TH 35-15
Wire stripping length	9.5 mm 0.37 in
Tool	Flat screwdriver Ø 4 mm Ø 0.157 in
Torque	0.5 - 0.8 N.m 4.4 - 7.1 lb.in

2

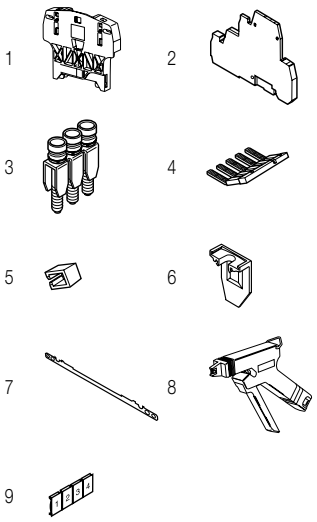

Accessories

	Description			Color	Type	Part Number		Pkg pce	Weight (1 pce) g
1	**End stops**	10 mm	0.394 in	Dark grey	BAZH1	1SNK900102R0000		20	24.00
2	**End sections**	5 mm	0.197 in	Grey	FED2AD1	1SNA199417R1200		20	6.60
3	**Jumper bars**	2 poles	32 A		BJMI6-2	1SNA176663R0000		10	4.40
		3 poles			BJMI6-3	1SNA176664R0100		10	6.70
		4 poles			BJMI6-4	1SNA176665R0200		10	8.90
		5 poles			BJMI6-5	1SNA176666R0300		10	11.20
		10 poles			BJMI6-10	1SNA176667R0400		10	22.40
4	**Lateral jumper bars**	2 poles	35 A	Grey	PC6-2	1SNA113546R1400		10	2.00
		10 poles			PC6-10	1SNA113548R2600		10	8.00
5	**Insulating tips**	For lateral jumper bars type PC...			EIP	1SNA113550R2400		10	
6	**Circuit separators**	0 mm	0 in	Grey	SCAD	1SNA196896R0000		10	
7	**Shield connectors**				CBD2S	1SNA178408R1400		50	
8	**Tools**	Semi automatic tool			OUPAD	1SNA178944R0400		1	205.00
		Hand tool			OUMAD	1SNA179466R0600		1	29.00
9	**Terminal block markers**	Blank card		White	RC610	1SNA233000R0100		1	7.50

Complete list of accessories is indicated in the terminal block datasheet.
Some accessories such as jumper bars may modify the terminal block's ratings: complete information in the accessories catalogue pages.

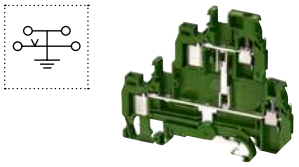

Ground

Description		Color	Type	Part Number		Pkg pce	Weight (1 pce) g
Ground	Profile aligned with D4/6.D2 ADO	Green-yellow	D4/6.D1.P.ADO	1SNA399931R2500		50	23.00

Technical data valid for copper conductors only.

1SNC163007S0201 - Rev. A

D6/8.D2.ADO IDC terminal blocks

Double deck ADO - screw clamp - 8 mm 0.315 in spacing

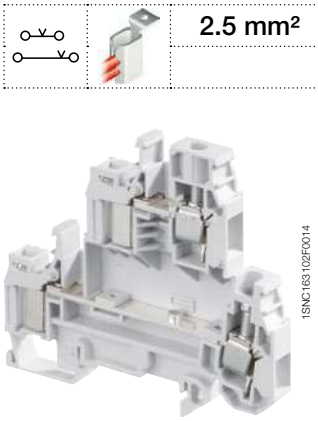

D6/8.D2.ADO

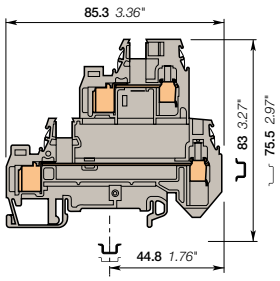

8 mm 0.315 in spacing

2.5 mm²

Description

- Save space with 2 decks terminal block,
- With the TE Connectivity ADO System®, experience the fastest and most reliable connection on the market,
- This solution brings all the benefits of the ADO System® and allows installators to connect on standard screw clamp,
- Up to 2 wires per connection in the ADO System® connection.

Ordering details

Description		Color	Type	Part Number		Pkg pce	Weight (1 pce) g
Feed-through	With 2 feed-through circuits	Grey	D6/8.D2.ADO	1SNA399600R2600		50	

Main technical data

		IEC	UL	CSA
ADO	Rigid: Solid/Stranded	1-2.5 mm²		
	Flexible without ferrule	1-2.5 mm²		
Screw clamp	Rigid: Solid/Stranded	0.2-10 mm²		
	Flexible without ferrule	0.22-6 mm²		
	Flexible with insulated ferrule			
	Gauge	A5		
Rated current / Rated cross section		24 A / 2.5 mm²		
Rated short-time withstand current (1s)		300 A		
Rated voltage		800 V		
Impulse withstand voltage		8000 V		
Protection		IP20	NEMA 1	

Mounting instructions

Rail	TH 35-7.5, TH 35-15
Wire stripping length	12 mm 0.47 in
Tool	Flat screwdriver Ø 4-4.5 mm Ø 0.157 - 0.177 in
Torque	0.8 - 1 N.m 7.1 - 8.9 lb.in

The connecting capacity data for one Rigid: Solid/Stranded, or one Flexible conductor (when applicable) is a mandatory information required by IEC, UL and CSA standards (Copper conductors). All other data are provided as supplementary information only. For more details, please consult our CB, UL or CSA certificates and technical datasheet available on http://www.TE.com

RoHS RoHS Gost R

Accessories

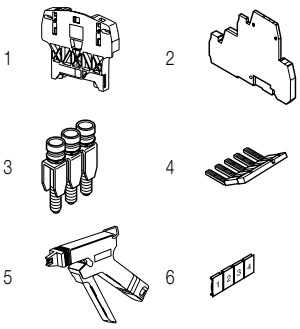

	Description			Color	Type	Part Number		Pkg pce	Weight (1 pce) g
1	**End stops**	10 mm	0.394 in	Dark grey	BAZH1	1SNK900102R0000		20	24.00
2	**End sections**	5 mm	0.197 in	Grey	FED2AD1	1SNA199417R1200		20	6.60
3	**Jumper bars**	2 poles	41 A		BJMI8-2	1SNA176669R1600		10	4.50
		3 poles			BJMI8-3	1SNA176670R1300		10	6.00
		4 poles			BJMI8-4	1SNA176671R0000		10	10.00
		5 poles			BJMI8-5	1SNA176672R0100		10	12.22
		10 poles			BJMI8-10	1SNA176673R0200		10	20.00
4	**Lateral jumper bars**	2 poles	50 A	Grey	PC8-2	1SNA116538R1700		10	3.00
		10 poles			PC8-10	1SNA163313R2400		10	
5	**Tools**	Semi automatic tool			OUPAD	1SNA178944R0400		1	205.00
		Hand tool			OUMAD	1SNA179466R0600		1	29.00
6	**Terminal block markers**	Blank card		White	RC810	1SNA234000R0200		1	8.20

Complete list of accessories is indicated in the terminal block datasheet.
Some accessories such as jumper bars may modify the terminal block's ratings: complete information in the accessories catalogue pages.

Technical data valid for copper conductors only.

1SNC163008S0201 - Rev. A

D2.5/5.SN.ADO IDC terminal blocks

Disconnect with blade - with test socket - ADO screw clamp 5 mm 0.197 in spacing

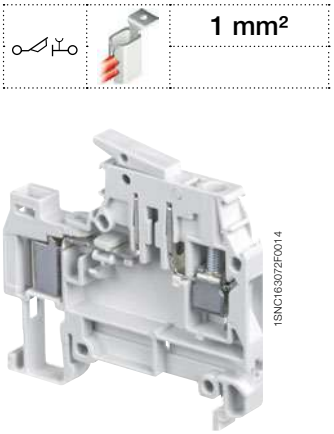

D2.5/5.SN.ADO

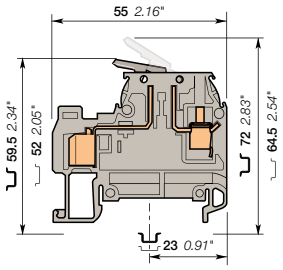

5 mm 0.197 in spacing

Description

- Ease your disconnect operations with the disconnect knife blade operated by hand,
- With the TE Connectivity ADO System®, experience the fastest and most reliable connection on the market,
- This solution brings all the benefits of the ADO System® and allows installators to connect on standard screw clamp,
- Up to 2 wires per connection in the ADO System® connection.

Ordering details

Description		Color	Type	Part Number		Pkg pce	Weight (1 pce) g
Disconnect	With test socket DIA 2 mm 0.079 in on the ADO side	Grey	D2.5/5.SN.ADO	1SNA399226R0200		50	9.00

Main technical data

		IEC	UL	CSA
ADO	Rigid: Solid/Stranded	0.2-1 mm²		
	Flexible without ferrule	0.22-1 mm²		
Screw clamp	Rigid: Solid/Stranded	0.2-4 mm²		
	Flexible without ferrule	0.22-2.5 mm²		
	Flexible with insulated ferrule			
	Gauge	A3		
Rated current / Rated cross section		10 A / 1 mm²		
Rated short-time withstand current (1s)		120 A		
Rated voltage		320 V		
Impulse withstand voltage		4000 V		
Protection		IP20	NEMA 1	

Mounting instructions

Rail	TH 35-7.5, TH 35-15
Wire stripping length	9.5 mm 0.37 in
Tool	Flat screwdriver Ø 3.5 mm Ø 0.138 in
Torque	0.4 - 0.6 N.m 3.5 - 5.3 lb.in

The connecting capacity data for one Rigid: Solid/Stranded, or one Flexible conductor (when applicable) is a mandatory information required by IEC, UL and CSA standards (Copper conductors). All other data are provided as supplementary information only. For more details, please consult our CB, UL or CSA certificates and technical datasheet available on http://www.TE.com

RoHS — Gost R

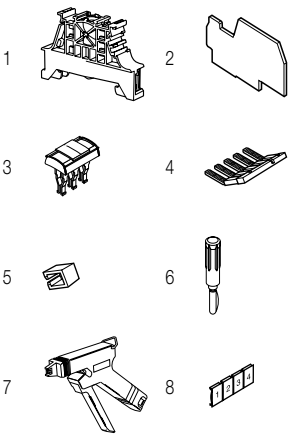

Accessories

	Description			Color	Type	Part Number		Pkg pce	Weight (1 pce) g
1	**End stops**	End stops		Dark grey	BAM4	1SNK900001R0000		50	14.00
					BAZ1	1SNK900002R0000		50	5.30
2	**End sections**	2 mm	0.079 in	Grey	FEDAD4	1SNA199352R0000		20	2.30
3	**Jumper bars**	2 poles	13.5 A	Orange	BJADO5-2	1SNA205955R0300		20	1.00
		3 poles			BJADO5-3	1SNA205956R0400		20	1.00
		5 poles			BJADO5-5	1SNA205958R1600		20	2.00
		10 poles			BJADO5-10	1SNA205963R0300		10	5.00
4	**Lateral jumper bars**	2 poles	30 A	Grey	PC5-2	1SNA113542R1000		10	1.80
		10 poles			PC5-10	1SNA113544R1200		10	6.00
5	**Insulating tips**	For lateral jumper bars type PC...			EIP	1SNA113550R2400		10	
6	**Test plugs**	DIA 2 mm 0.079 in		Black	FC2	1SNA007865R2600		100	
7	**Tools**	Semi automatic tool			OUPAD	1SNA178944R0400		1	205.00
		Hand tool			OUMAD	1SNA179466R0600		1	29.00
8	**Terminal block markers**	Blank card		White	RC510	1SNA231000R0700		1	5.20

Complete list of accessories is indicated in the terminal block datasheet.
Some accessories such as jumper bars may modify the terminal block's ratings: complete information in the accessories catalogue pages.

Technical data valid for copper conductors only.

1SNC163013S0201 - Rev. A

D2.5/5.SN.ADO IDC terminal blocks

Disconnect with blade - with test socket - ADO screw clamp 5 mm 0.197 in spacing

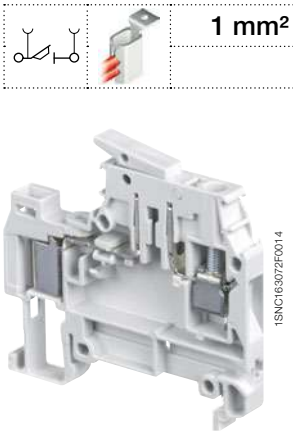

D2.5/5.SN.ADO

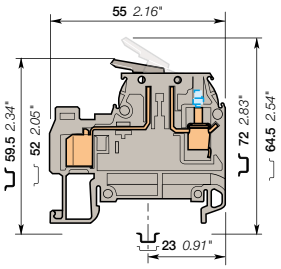

5 mm 0.197 in spacing

Description

- Ease your disconnect operations with the disconnect knife blade operated by hand,
- With the TE Connectivity ADO System®, experience the fastest and most reliable connection on the market,
- This solution brings all the benefits of the ADO System® and allows installators to connect on standard screw clamp,
- Up to 2 wires per connection in the ADO System® connection.

Ordering details

Description		Color	Type	Part Number		Pkg pce	Weight (1 pce) g
Disconnect	With 2 test sockets DIA 2 mm 0.079 in	Grey	D2.5/5.SNT2.ADO	1SNA399228R1400		50	9.00

Main technical data

		IEC	UL	CSA
ADO	Rigid: Solid/Stranded	0.2-1 mm²		
	Flexible without ferrule	0.22-1 mm²		
Screw clamp	Rigid: Solid/Stranded	0.2-4 mm²		
	Flexible without ferrule	0.22-2.5 mm²		
	Flexible with insulated ferrule			
	Gauge	A3		
Rated current / Rated cross section		10 A / 1 mm²		
Rated short-time withstand current (1s)		120 A		
Rated voltage		320 V		
Impulse withstand voltage		4000 V		
Protection		IP20	NEMA 1	

Mounting instructions

Rail	TH 35-7.5, TH 35-15
Wire stripping length	9.5 mm 0.37 in
Tool	Flat screwdriver Ø 3.5 mm Ø 0.138 in
Torque	0.4 - 0.6 N.m 3.5 - 5.3 lb.in

The connecting capacity data for one Rigid: Solid/Stranded, or one Flexible conductor (when applicable is a mandatory information required by IEC, UL and CSA standards (Copper conductors). All other data are provided as supplementary information only. For more details, please consult our CB, UL or CSA certificates and technical datasheet available on http://www.TE.com

RoHS RoHS Gost R

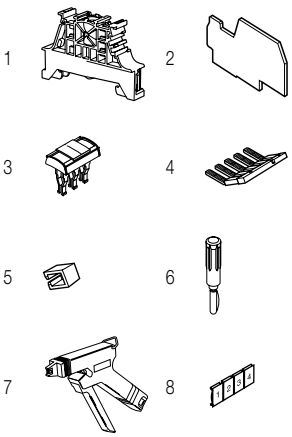

Accessories

	Description			Color	Type	Part Number		Pkg pce	Weight (1 pce) g
1	**End stops**	10 mm	0.394 in	Dark grey	BAM4	1SNK900001R0000		50	14.00
		5.2 mm	0.205 in		BAZ1	1SNK900002R0000		50	5.30
2	**End sections**	2 mm	0.079 in	Grey	FEDAD4	1SNA199352R0000		20	2.30
3	**Jumper bars**	2 poles	13.5 A	Orange	BJADO5-2	1SNA205955R0300		20	1.00
		3 poles			BJADO5-3	1SNA205956R0400		20	1.00
		10 poles			BJADO5-10	1SNA205963R0300		10	5.00
4	**Lateral jumper bars**	2 poles	30 A	Grey	PC5-2	1SNA113542R1000		10	1.80
		10 poles			PC5-10	1SNA113544R1200		10	6.00
5	**Insulating tips**	For lateral jumper bars type PC...			EIP	1SNA113550R2400		10	
6	**Test plugs**	DIA 2 mm 0.079 in		Black	FC2	1SNA007865R2600		100	
7	**Tools**	Semi automatic tool			OUPAD	1SNA178944R0400		1	205.00
		Hand tool			OUMAD	1SNA179466R0600		1	29.00
8	**Terminal block markers**	Blank card		White	RC510	1SNA231000R0700		1	5.20

Complete list of accessories is indicated in the terminal block datasheet.
Some accessories such as jumper bars may modify the terminal block's ratings: complete information in the accessories catalogue pages.

Technical data valid for copper conductors only.

1SNC163014S0201 - Rev. A

D4/6.SN.ADO IDC terminal blocks

Disconnect with blade - with test socket - ADO screw clamp 6 mm 0.236 in spacing

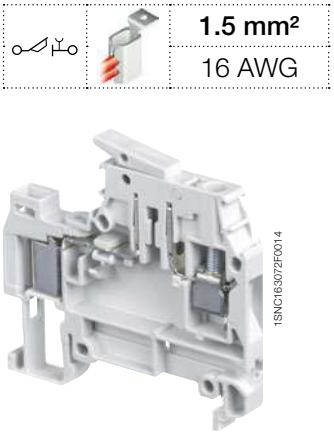

D4/6.SN.ADO

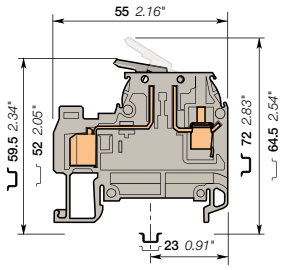

6 mm 0.236 in spacing

Description

- Ease your disconnect operations with the disconnect knife blade operated by hand,
- With the TE Connectivity ADO System®, experience the fastest and most reliable connection on the market,
- This solution brings all the benefits of the ADO System® and allows installators to connect on standard screw clamp,
- Up to 2 wires per connection in the ADO System® connection.

Ordering details

Description		Color	Type	Part Number		Pkg pce	Weight (1 pce) g
Disconnect	With test socket DIA 2 mm 0.079 in on the ADO side	Grey	D4/6.SN.ADO	1SNA199107R2400		50	9.00
		Orange	D4/6.SN.ADO	1SNA199108R0500		50	9.00

Main technical data

		IEC	UL	CSA
ADO	Rigid: Solid/Stranded	0.34-1.5 mm²	22-16 AWG	22-16 AWG
	Flexible without ferrule	0.34-1.5 mm²		
Screw clamp	Rigid: Solid/Stranded	0.2-4 mm²	22-10 AWG	22-10 AWG
	Flexible without ferrule	0.22-4 mm²		
	Flexible with insulated ferrule			
	Gauge	A4		
Rated current / Rated cross section		10 A / 1.5 mm²	10 A / 16 AWG	15 A / 16 AWG
Rated short-time withstand current (1s)		180 A		
Rated voltage		500 V	600 V	600 V
Impulse withstand voltage		6000 V		
Protection		IP20	NEMA 1	

Mounting instructions

Rail	TH 35-7.5, TH 35-15
Wire stripping length	9.5 mm 0.37 in
Tool	Flat screwdriver Ø 4 mm Ø 0.157 in
Torque	0.5 - 0.8 N.m 4.4 - 7.1 lb.in

The connecting capacity data for one Rigid: Solid/Stranded, or one Flexible conductor (when applicable) is a mandatory information required by IEC, UL and CSA standards (Copper conductors). All other data are provided as supplementary information only. For more details, please consult our CB, UL or CSA certificates and technical datasheet available on http://www.TE.com

RoHS USR CNR cCSAus Gost R

Accessories

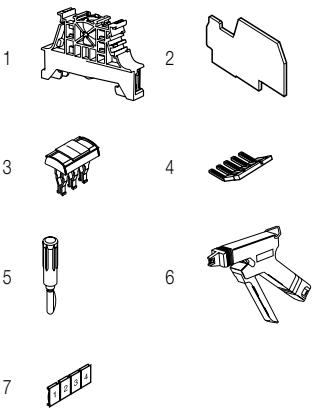

	Description			Color	Type	Part Number		Pkg pce	Weight (1 pce) g
1	**End stops**	10 mm	0.394 in	Dark grey	BAM4	1SNK900001R0000		50	14.00
		5.2 mm	0.205 in		BAZ1	1SNK900002R0000		50	5.30
2	**End sections**	2 mm	0.079 in	Grey	FEDAD4	1SNA199352R0000		20	2.30
3	**Jumper bars**	2 poles	17.5 A	Orange	BJADO6-2	1SNA205974R0600		20	1.00
		3 poles			BJADO6-3	1SNA205975R0700		20	1.00
		10 poles			BJADO6-10	1SNA205982R2700		10	6.00
4	**Lateral jumper bars**	10 poles	35 A		PC61-10	1SNA163311R2200		10	5.00
5	**Test plugs**	DIA 2 mm	0.079 in	Black	FC2	1SNA007865R2600		100	
6	**Tools**	Semi automatic tool			OUPAD	1SNA178944R0400		1	205.00
		Hand tool			OUMAD	1SNA179466R0600		1	29.00
7	**Terminal block markers**	Blank card		White	RC610	1SNA233000R0100		1	7.50

Complete list of accessories is indicated in the terminal block datasheet.
Some accessories such as jumper bars may modify the terminal block's ratings: complete information in the accessories catalogue pages.

Technical data valid for copper conductors only.

1SNC163015S0201 - Rev. A

D4/6.SNT2.ADO IDC terminal blocks

Disconnect with blade - with test socket - ADO screw clamp 6 mm 0.236 in spacing

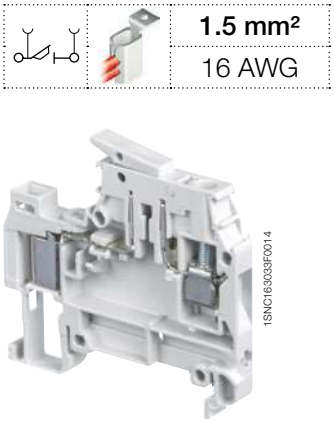

1SNC163033F0014

D4/6.SNT2.ADO

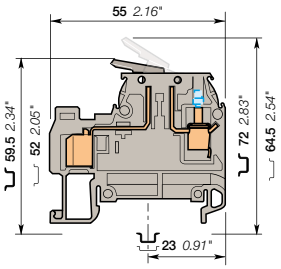

6 mm 0.236 in spacing

Description

- Ease your disconnect operations with the disconnect knife blade operated by hand,
- With the TE Connectivity ADO System®, experience the fastest and most reliable connection on the market,
- This solution brings all the benefits of the ADO System® and allows installators to connect on standard screw clamp,
- Up to 2 wires per connection in the ADO System® connection.

Ordering details

Description		Color	Type	Part Number		Pkg pce	Weight (1 pce) g
Disconnect	With 2 test sockets DIA 2 mm 0.079 in	Grey	D4/6.SNT2.ADO	1SNA199235R2300		50	9.00

Main technical data

		IEC	UL	CSA
ADO	Rigid: Solid/Stranded	0.34-1.5 mm²	22-16 AWG	22-16 AWG
	Flexible without ferrule	0.34-1.5 mm²		
Screw clamp	Rigid: Solid/Stranded	0.2-4 mm²	22-10 AWG	22-10 AWG
	Flexible without ferrule	0.22-4 mm²		
	Flexible with insulated ferrule			
	Gauge	A4		
Rated current / Rated cross section		10 A / 1.5 mm²	10 A / 16 AWG	15 A / 16 AWG
Rated short-time withstand current (1s)		180 A		
Rated voltage		500 V	600 V	600 V
Impulse withstand voltage		6000 V		
Protection		IP20	NEMA 1	

Mounting instructions

Rail	TH 35-7.5, TH 35-15
Wire stripping length	9.5 mm 0.37 in
Tool	Flat screwdriver Ø 4 mm Ø 0.157 in
Torque	0.5 - 0.8 N.m 4.4 - 7.1 lb.in

The connecting capacity data for one Rigid: Solid/Stranded, or one Flexible conductor (when applicable) is a mandatory information required by IEC, UL and CSA standards (Copper conductors). All other data are provided as supplementary information only. For more details, please consult our CB, UL or CSA certificates and technical datasheet available on http://www.TE.com

RoHS USR CNR cCSAus Gost R

Accessories

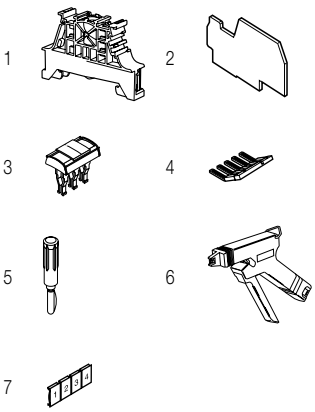

	Description			Color	Type	Part Number		Pkg pce	Weight (1 pce) g
1	**End stops**	10 mm	0.394 in	Dark grey	BAM4	1SNK900001R0000		50	14.00
		5.2 mm	0.205 in		BAZ1	1SNK900002R0000		50	5.30
2	**End sections**	2 mm	0.079 in	Grey	FEDAD4	1SNA199352R0000		20	2.30
3	**Jumper bars**	2 poles	17.5 A	Orange	BJADO6-2	1SNA205974R0600		20	1.00
		3 poles			BJADO6-3	1SNA205975R0700		20	1.00
		10 poles			BJADO6-10	1SNA205982R2700		10	6.00
4	**Lateral jumper bars**	10 poles	35 A		PC61-10	1SNA163311R2200		10	5.00
5	**Test plugs**	DIA 2 mm	0.079 in	Black	FC2	1SNA007865R2600		100	
6	**Tools**	Semi automatic tool			OUPAD	1SNA178944R0400		1	205.00
		Hand tool			OUMAD	1SNA179466R0600		1	29.00
7	**Terminal block markers**	Blank card		White	RC610	1SNA233000R0100		1	7.50

Complete list of accessories is indicated in the terminal block datasheet.
Some accessories such as jumper bars may modify the terminal block's ratings: complete information in the accessories catalogue pages.

Technical data valid for copper conductors only.

1SNC163016S0201 - Rev. A

D4/8.SN.ADO IDC terminal blocks

Disconnect with blade - with test socket - ADO screw clamp 8 mm 0.315 in spacing

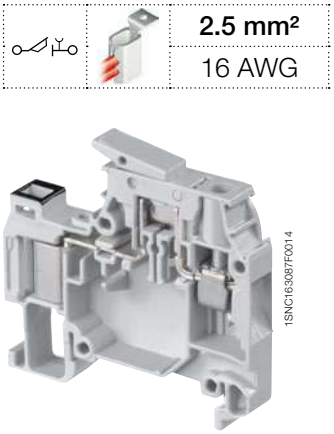

D4/8.SN.ADO

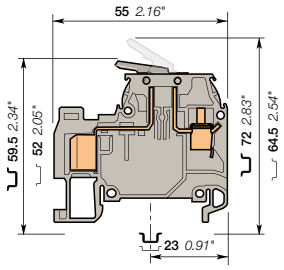

8 mm 0.315 in spacing

Description

- Ease your disconnect operations with the disconnect knife blade operated by hand,
- With the TE Connectivity ADO System®, experience the fastest and most reliable connection on the market,
- This solution brings all the benefits of the ADO System® and allows installators to connect on standard screw clamp,
- Up to 2 wires per connection in the ADO System® connection.

Ordering details

Description		Color	Type	Part Number		Pkg pce	Weight (1 pce) g
Disconnect	With test socket DIA 2 mm 0.079 in on the ADO side, with black marking for wire size 1-2.5 mm² (16-14 AWG)	Grey	D4/8.SN.ADO	1SNA199137R1100		50	11.00

Main technical data

		IEC	UL	CSA
ADO	Rigid: Solid/Stranded	1-2.5 mm²	22-16 AWG	22-16 AWG
	Flexible without ferrule	1-2.5 mm²		
Screw clamp	Rigid: Solid/Stranded	0.2-6 mm²	22-10 AWG	22-10 AWG
	Flexible without ferrule	0.22-4 mm²		
	Flexible with insulated ferrule			
	Gauge	A4		
Rated current / Rated cross section		15 A / 2.5 mm²	15 A / 16 AWG	15 A / 16 AWG
Rated short-time withstand current (1s)		300 A		
Rated voltage		500 V	600 V	600 V
Impulse withstand voltage		6000 V		
Protection		IP20	NEMA 1	

Mounting instructions

Rail		TH 35-7.5, TH 35-15
Wire stripping length		9.5 mm 0.37 in
Tool		Flat screwdriver Ø 4 mm Ø 0.157 in
Torque		0.5 - 0.8 N.m 4.4 - 7.1 lb.in

The connecting capacity data for one Rigid: Solid/Stranded, or one Flexible conductor (when applicable) is a mandatory information required by IEC, UL and CSA standards (Copper conductors). All other data are provided as supplementary information only. For more details, please consult our CB, UL or CSA certificates and technical datasheet available on http://www.TE.com

RoHS USR CNR cCSAus Gost R

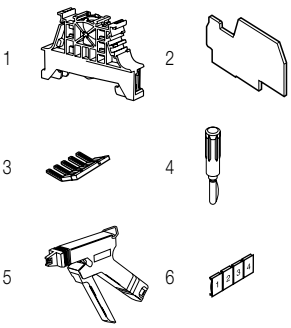

Accessories

	Description			Color	Type	Part Number		Pkg pce	Weight (1 pce) g
1	**End stops**	10 mm	0.394 in	Dark grey	BAM4	1SNK900001R0000		50	14.00
		5.2 mm	0.205 in		BAZ1	1SNK900002R0000		50	5.30
2	**End sections**	2 mm	0.079 in	Grey	FEDAD4	1SNA199352R0000		20	2.30
3	**Lateral jumper bars**	10 poles	35 A		PC81-10	1SNA173523R1100		10	5.00
4	**Test plugs**	DIA 2 mm 0.079 in		Black	FC2	1SNA007865R2600		100	
5	**Tools**	Semi automatic tool			OUPAD	1SNA178944R0400		1	205.00
		Hand tool			OUMAD	1SNA179466R0600		1	29.00
6	**Terminal block markers**	Blank card		White	RC810	1SNA234000R0200		1	8.20

Complete list of accessories is indicated in the terminal block datasheet.
Some accessories such as jumper bars may modify the terminal block's ratings: complete information in the accessories catalogue pages.

Technical data valid for copper conductors only.

D4/8.SF.I.ADO IDC terminal blocks

For 5 x 20 and 5 x 25 fuses - with test socket ADO - screw clamp 8 mm 0.315 in spacing

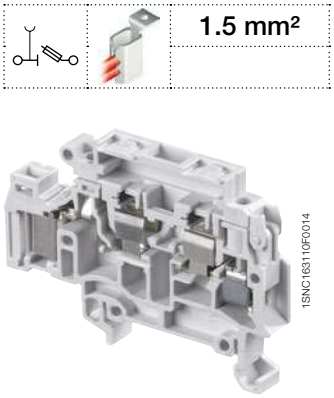

1SNC163110F0014

D4/8.SF.I.ADO

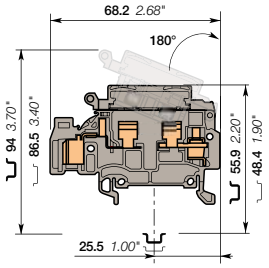

8 mm 0.315 in spacing

Description

- Protect your circuits with 5 x 20 and 5 x 25 fuse terminal blocks (fuse not delivered with the terminal blocks),
- With the TE Connectivity ADO System®, experience the fastest and most reliable connection on the market,
- This solution brings all the benefits of the ADO System® and allows installators to connect on standard screw clamp,
- Up to 2 wires per connection in the ADO System® connection.

Ordering details

Description		Color	Type	Part Number		Pkg pce	Weight (1 pce) g
Fuse	With test socket DIA 2 mm 0.079 in on the ADO side	Grey	D4/8.SF.I.ADO	1SNA399785R0300		50	13.00

Main technical data

		IEC	UL	CSA
ADO	Rigid: Solid/Stranded	0.34-1.5 mm²		
	Flexible without ferrule	0.34-1.5 mm²		
Screw clamp	Rigid: Solid/Stranded	0.2-4 mm²		
	Flexible without ferrule	0.22-4 mm²		
	Flexible with insulated ferrule			
	Gauge	A4		
Rated current / Rated cross section		6.3 A / 1.5 mm²		
Rated short-time withstand current (1s)		180 A		
Rated voltage		630 V		
Impulse withstand voltage		8000 V		
Protection		IP20	NEMA 1	

Mounting instructions

Rail	TH 35-7.5, TH 35-15
Wire stripping length	9.5 mm 0.37 in
Tool	Flat screwdriver Ø 4 mm Ø 0.157 in
Torque	0.5 - 0.8 N.m 4.4 - 7.1 lb.in

The connecting capacity data for one Rigid: Solid/Stranded, or one Flexible conductor (when applicable) is a mandatory information required by IEC, UL and CSA standards (Copper conductors). All other data are provided as supplementary information only. For more details, please consult our CB, UL or CSA certificates and technical datasheet available on http://www.TE.com

RoHS RoHS Gost R

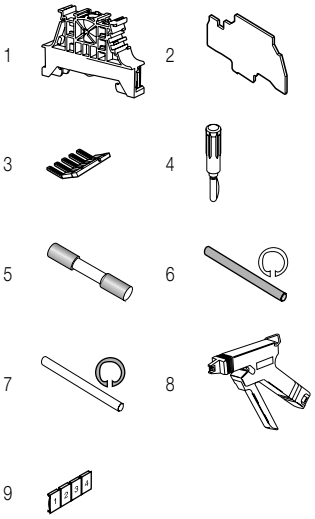

Accessories

	Description			Color	Type	Part Number		Pkg pce	Weight (1 pce) g
1	**End stops**	10 mm	0.394 in	Dark grey	BAM4	1SNK900001R0000		50	14.00
		5.2 mm	0.205 in		BAZ1	1SNK900002R0000		50	5.30
2	**End sections**	1.5 mm	0.059 in	Grey	FEDAD10	1SNA399758R2700		20	3.00
3	**Lateral jumper bars**	10 poles	35 A		PC81-10	1SNA173523R1100		10	5.00
4	**Test plugs**	DIA 2 mm 0.079 in		Black	FC2	1SNA007865R2600		100	
5	**Fuses**	0.5 A			FU520	1SNA008288R1500		10	
		1 A				1SNA008290R1300		10	
		2 A				1SNA008291R0000		10	
		3.15 A				1SNA008289R1600		10	
		5 A				1SNA008292R0100		10	
6	**Assembly rods**	2 poles			TGA8	1SNA168672R1100		10	1.00
		3 poles				1SNA168673R1200		10	
		4 poles				1SNA168674R1300		10	
7	**Spring retaining rings**				ANT	1SNA168675R1400		10	
8	**Tools**	Semi automatic tool			OUPAD	1SNA178944R0400		1	205.00
		Hand tool			OUMAD	1SNA179466R0600		1	29.00
9	**Terminal block markers**	Blank card		White	RC810	1SNA234000R0200		1	8.20

Complete list of accessories is indicated in the terminal block datasheet.
Some accessories such as jumper bars may modify the terminal block's ratings: complete information in the accessories catalogue pages.

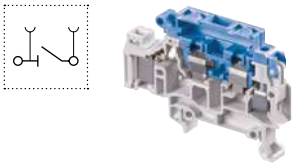

Disconnect IDC terminal blocks

Description		Color	Type	Part Number		Pkg pce	Weight (1 pce) g
Disconnect	Profile aligned with D4/8.SF...ADO	Grey, blue	D4/8.SNNT2.I.ADO	1SNA399779R2400		50	13.00

Technical data valid for copper conductors only.

1SNC163019S0201 - Rev. A

D4/8.SF.I.ADO IDC Terminal Blocks

For 5 x 20 and 5 x 25 fuses - with test socket ADO - screw clamp 8 mm 0.315 in Spacing

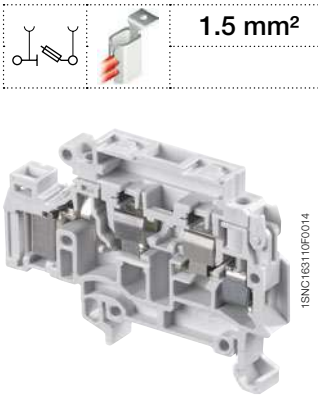

D4/8.SF.I.ADO

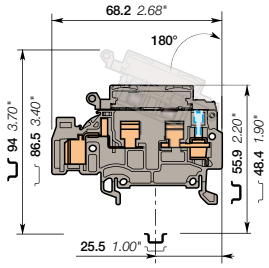

8 mm 0.315 in Spacing

1.5 mm²

Description

- Protect your circuits with 5 x 20 and 5 x 25 fuse terminal blocks (fuse not delivered with the terminal blocks),
- With the TE Connectivity ADO System®, experience the fastest and most reliable connection on the market,
- This solution brings all the benefits of the ADO System® and allows installators to connect on standard screw clamp,
- Up to 2 wires per connection in the ADO System® connection.

Ordering Details

Description		Color	Type	Part Number		Pkg pce	Weight (1 pce) g
Fuse	With 2 test sockets DIA 2 mm 0.079 in	Grey	D4/8.SFT2.I.ADO	1SNA399777R1200		50	13.00

Main Technical Data

		IEC	UL	CSA
ADO	Rigid: Solid/Stranded	0.34-1.5 mm²		
	Flexible without ferrule	0.34-1.5 mm²		
Screw clamp	Rigid: Solid/Stranded	0.2-4 mm²		
	Flexible without ferrule	0.22-4 mm²		
	Flexible with insulated ferrule			
	Gauge	A4		
Rated current / Rated cross section		6.3 A / 1.5 mm²		
Rated short-time withstand current (1s)		180 A		
Rated voltage		630 V		
Impulse withstand voltage		8000 V		
Protection		IP20	NEMA 1	

Mounting Instructions

Rail	TH 35-7.5, TH 35-15
Wire stripping length	9.5 mm 0.37 in
Tool	Flat screwdriver Ø 4 mm Ø 0.157 in
Torque	0.5 - 0.8 N.m 4.4 - 7.1 lb.in

The connecting capacity data for one Rigid: Solid/Stranded, or one Flexible conductor (when applicable) is a mandatory information required by IEC, UL and CSA standards (Copper conductors). All other data are provided as supplementary information only. For more details, please consult our CB, UL or CSA certificates and technical datasheet available on http://www.TE.com

RoHS RoHS · Gost R

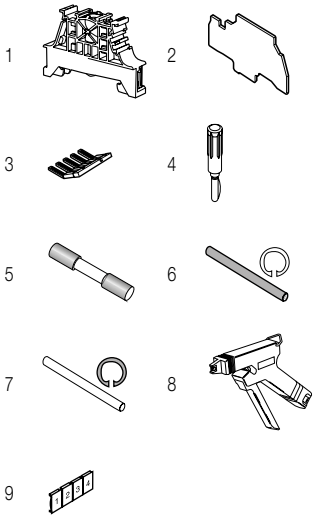

Accessories

	Description			Color	Type	Part Number		Pkg pce	Weight (1 pce) g
1	**End Stops**	10 mm	0.394 in	Dark grey	BAM4	1SNK900001R0000		50	14.00
		5.2 mm	0.205 in		BAZ1	1SNK900002R0000		50	5.30
2	**End Sections**	1.5 mm	0.059 in	Grey	FEDAD10	1SNA399758R2700		20	3.00
3	**Lateral Jumper Bars**	10 poles	35 A		PC81-10	1SNA173523R1100		10	5.00
4	**Test Plugs**	DIA 2 mm 0.079 in		Black	FC2	1SNA007865R2600		100	
5	**Fuses**	0.5 A			FU520	1SNA008288R1500		10	
		1 A				1SNA008290R1300		10	
		2 A				1SNA008291R0000		10	
		5 A				1SNA008292R0100		10	
6	**Assembly Rods**	2 poles			TGA8	1SNA168672R1100		10	1.00
		3 poles				1SNA168673R1200		10	
		4 poles				1SNA168674R1300		10	
7	**Spring Retaining Rings**				ANT	1SNA168675R1400		10	
8	**Tools**	Semi automatic tool			OUPAD	1SNA178944R0400		1	205.00
		Hand tool			OUMAD	1SNA179466R0600		1	29.00
9	**Terminal Block Markers**	Blank card		White	RC810	1SNA234000R0200		1	8.20

Complete list of accessories is indicated in the terminal block datasheet.
Some accessories such as jumper bars may modify the terminal block's ratings: complete information in the accessories catalogue pages.

Disconnect IDC Terminal Blocks

Description		Color	Type	Part Number		Pkg pce	Weight (1 pce) g
Disconnect	Profile aligned with D4/8.SF.I.ADO	Grey, Blue	D4/8.SNNT2.I.ADO	1SNA399779R2400		50	13.00

Technical data valid for copper conductors only.

1SNC163020S0201 - Rev. A

D4/8.SF.I.ADO IDC Terminal Blocks

For 5 x 20 and 5 x 25 fuses - with blown fuse indicator and test socket ADO - screw clamp - 8 mm 0.315 in spacing

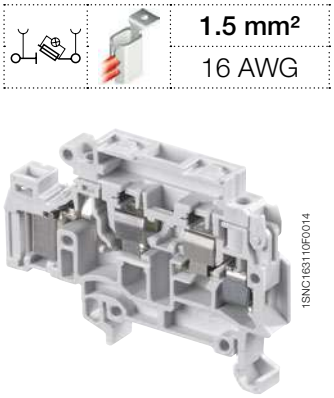

1SNC163110F0014

D4/8.SF.I.ADO

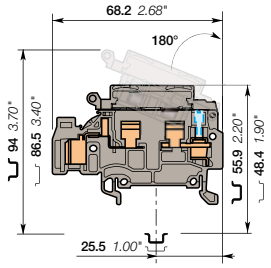

8 mm 0.315 in spacing

Description

- Protect your circuits with 5 x 20 and 5 x 25 fuse terminal blocks (fuse not delivered with the terminal blocks),
- Quickly identify the defective circuit thanks to blown fuse indicators,
- With the TE Connectivity ADO System®, experience the fastest and most reliable connection on the market,
- This solution brings all the benefits of the ADO System® and allows installators to connect on standard screw clamp,
- Up to 2 wires per connection in the ADO System® connection.

Ordering Details

Description		Color	Type	Part Number		Pkg pce	Weight (1 pce) g
Fuse	With blown fuse indicator by LED 24 V AC/DC and 2 test sockets DIA 2 mm 0.079 in	Grey	D4/8.SFDT2.I.ADO	1SNA399782R0000		50	13.00
	With blown fuse indicator by neon 110 - 230 V AC and 2 test sockets DIA 2 mm 0.079 in	Grey	D4/8.SFLT2.I.ADO	1SNA399856R0200		50	13.00

Main Technical Data

		IEC	UL	CSA
ADO	Rigid: Solid/Stranded	0.34-1.5 mm²		
	Flexible without ferrule	0.34-1.5 mm²		
Screw clamp	Rigid: Solid/Stranded	0.2-4 mm²		
	Flexible without ferrule	0.22-4 mm²		
	Flexible with insulated ferrule			
	Gauge	A4		
Rated current / Rated cross section		6.3 A / 1.5 mm²		
Rated short-time withstand current (1s)		180 A		
Rated voltage		500 V		
Impulse withstand voltage		6000 V		
Protection		IP20	NEMA 1	

Mounting Instructions

Rail	TH 35-7.5, TH 35-15
Wire stripping length	9.5 mm 0.37 in
Tool	Flat screwdriver Ø 4 mm Ø 0.157 in
Torque	0.5 - 0.8 N.m 4.4 - 7.1 lb.in

The connecting capacity data for one Rigid: Solid/Stranded, or one Flexible conductor (when applicable) is a mandatory information required by IEC, UL and CSA standards (Copper conductors). All other data are provided as supplementary information only. For more details, please consult our CB, UL or CSA certificates and technical datasheet available on http://www.TE.com

RoHS RoHS · Gost R

Leakage current: 24 V < 4.5 mA; 110 V < 0.5 mA; 230 V < 0.7 mA

Accessories

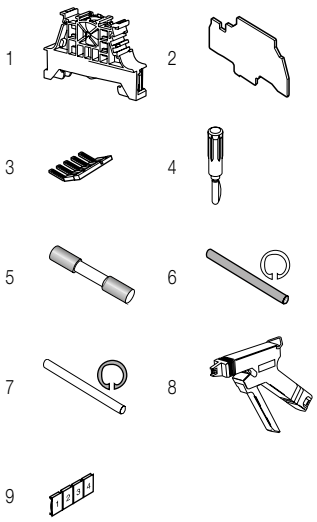

	Description			Color	Type	Part Number		Pkg pce	Weight (1 pce) g
1	**End Stops**	10 mm	0.394 in	Dark grey	BAM4	1SNK900001R0000		50	14.00
		5.2 mm	0.205 in		BAZ1	1SNK900002R0000		50	5.30
2	**End Sections**	1.5 mm	0.059 in	Grey	FEDAD10	1SNA399758R2700		20	3.00
3	**Lateral Jumper Bars**	10 poles	35 A		PC81-10	1SNA173523R1100		10	5.00
4	**Test Plugs**	DIA 2 mm 0.079 in		Black	FC2	1SNA007865R2600		100	
5	**Fuses**	0.5 A			FU520	1SNA008288R1500		10	
		1 A				1SNA008290R1300		10	
		2 A				1SNA008291R0000		10	
		3.15 A				1SNA008289R1600		10	
		5 A				1SNA008292R0100		10	
6	**Assembly Rods**	2 poles			TGA8	1SNA168672R1100		10	1.00
		3 poles				1SNA168673R1200		10	
		4 poles				1SNA168674R1300		10	
7	**Spring Retaining Rings**				ANT	1SNA168675R1400		10	
8	**Tools**	Semi automatic tool			OUPAD	1SNA178944R0400		1	205.00
		Hand tool			OUMAD	1SNA179466R0600		1	29.00
9	**Terminal Block Markers**	Blank card		White	RC810	1SNA234000R0200		1	8.20

Complete list of accessories is indicated in the terminal block datasheet.
Some accessories such as jumper bars may modify the terminal block's ratings: complete information in the accessories catalogue pages.

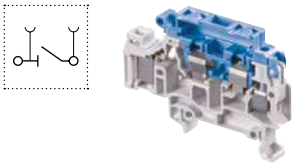

Disconnect IDC Terminal Blocks

Description		Color	Type	Part Number		Pkg pce	Weight (1 pce) g
Disconnect	Profile aligned with D4/8.SF.I.ADO	Grey, Blue	D4/8.SNNT2.I.ADO	1SNA399779R2400		50	13.00

Technical data valid for copper conductors only.

D4/8.SF.I.ADO IDC terminal blocks

For 5 x 20 and 5 x 25 fuses - with test socket ADO - screw clamp 8 mm 0.315 in spacing

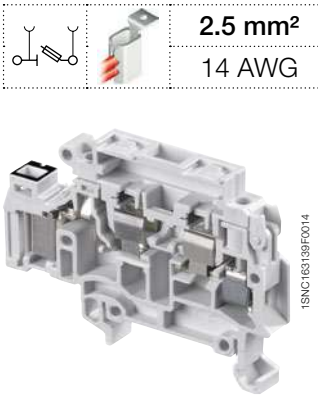

D4/8.SF.I.ADO

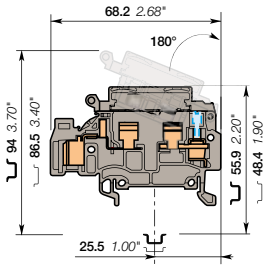

8 mm 0.315 in spacing

2.5 mm²
14 AWG

Description

- Protect your circuits with 5 x 20 and 5 x 25 fuse terminal blocks (fuse not delivered with the terminal blocks),
- With the TE Connectivity ADO System®, experience the fastest and most reliable connection on the market,
- This solution brings all the benefits of the ADO System® and allows installators to connect on standard screw clamp,
- Up to 2 wires per connection in the ADO System® connection.

Ordering details

Description		Color	Type	Part Number		Pkg pce	Weight (1 pce) g
Fuse	With 2 test sockets DIA 2 mm 0.079 in, With black marking for wire size 1-2.5 mm² (16-14 AWG)	Grey	D4/8.SFT2.I.ADO2	1SNA399762R1300		50	13.00

Main technical data

		IEC	UL	CSA
ADO	Rigid: Solid/Stranded	1-2.5 mm²		
	Flexible without ferrule	1-2.5 mm²		
Screw clamp	Rigid: Solid/Stranded	0.2-4 mm²		
	Flexible without ferrule	0.22-4 mm²		
	Flexible with insulated ferrule			
	Gauge	A4		
Rated current / Rated cross section		6.3 A / 2.5 mm²		
Rated short-time withstand current (1s)		300 A		
Rated voltage		630 V		
Impulse withstand voltage		8000 V		
Protection		IP20	NEMA 1	

Mounting instructions

Rail	TH 35-7.5, TH 35-15
Wire stripping length	9.5 mm 0.37 in
Tool	Flat screwdriver Ø 4 mm Ø 0.157 in
Torque	0.5 - 0.8 N.m 4.4 - 7.1 lb.in

The connecting capacity data for one Rigid: Solid/Stranded, or one Flexible conductor (when applicable) is a mandatory information required by IEC, UL and CSA standards (Copper conductors). All other data are provided as supplementary information only. For more details, please consult our CB, UL or CSA certificates and technical datasheet available on http://www.TE.com

RoHS RoHS Gost R

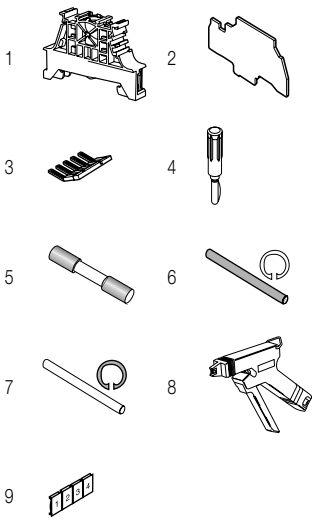

Accessories

	Description			Color	Type	Part Number		Pkg pce	Weight (1 pce) g
1	**End stops**	10 mm	0.394 in	Dark grey	BAM4	1SNK900001R0000		50	14.00
		5.2 mm	0.205 in		BAZ1	1SNK900002R0000		50	5.30
2	**End sections**	1.5 mm	0.059 in	Grey	FEDAD10	1SNA399758R2700		20	3.00
3	**Lateral jumper bars**	10 poles	35 A		PC81-10	1SNA173523R1100		10	5.00
4	**Test plugs**	DIA 2 mm	0.079 in	Black	FC2	1SNA007865R2600		100	
5	**Fuses**	0.5 A			FU520	1SNA008288R1500		10	
		1 A				1SNA008290R1300		10	
		2 A				1SNA008291R0000		10	
		3.15 A				1SNA008289R1600		10	
		5 A				1SNA008292R0100		10	
6	**Assembly rods**	2 poles			TGA8	1SNA168672R1100		10	1.00
		3 poles				1SNA168673R1200		10	
		4 poles				1SNA168674R1300		10	
7	**Spring retaining rings**				ANT	1SNA168675R1400		10	
8	**Tools**	Semi automatic tool			OUPAD	1SNA178944R0400		1	205.00
		Hand tool			OUMAD	1SNA179466R0600		1	29.00
9	**Terminal block markers**	Blank card		White	RC810	1SNA234000R0200		1	8.20

Complete list of accessories is indicated in the terminal block datasheet.
Some accessories such as jumper bars may modify the terminal block's ratings: complete information in the accessories catalogue pages.

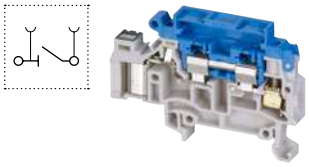

Disconnect IDC terminal blocks

Description		Color	Type	Part Number		Pkg pce	Weight (1 pce) g
Disconnect	Profile aligned with D4/8.SF.I.ADO	Grey, blue	D4/8.SNNT2.I.ADO2	1SNA399766R1700		50	13.00

Technical data valid for copper conductors only.

1SNC163022S0201 - Rev. A

D4/8.SF.I.ADO IDC terminal blocks

For 5 x 20 and 5 x 25 fuses - with test socket ADO - screw clamp 8 mm 0.315 in spacing

2.5 mm²
14 AWG

D4/8.SF.I.ADO

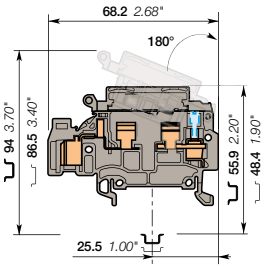

8 mm 0.315 in spacing

Description

- Protect your circuits with 5 x 20 and 5 x 25 fuse terminal blocks (fuse not delivered with the terminal blocks),
- Quickly identify the defective circuit thanks to blown fuse indicators,
- With the TE Connectivity ADO System®, experience the fastest and most reliable connection on the market,
- This solution brings all the benefits of the ADO System® and allows installators to connect on standard screw clamp,
- Up to 2 wires per connection in the ADO System® connection.

Ordering details

Description		Color	Type	Part Number		Pkg pce	Weight (1 pce) g
Fuse	With blown fuse indicator by neon 110 - 230 V AC and 2 test sockets DIA 2 mm 0.079 in, with black marking for wire size 1-2.5 mm² (16-14 AWG)	Grey	D4/8.SFLT2.I.ADO2	1SNA399768R2100		50	13.00
	With blown fuse indicator by LED 24 V AC/DC and 2 test sockets DIA 2 mm 0.079 in, with black marking for wire size 1-2.5 mm² (16-14 AWG)	Grey	D4/8.SFDT2.I.ADO2	1SNA399770R2700		50	13.00

Main technical data

		IEC	UL	CSA
ADO	Rigid: Solid/Stranded	1-2.5 mm²		
	Flexible without ferrule	1-2.5 mm²		
Screw clamp	Rigid: Solid/Stranded	0.2-4 mm²		
	Flexible without ferrule	0.22-4 mm²		
	Flexible with insulated ferrule			
	Gauge	A4		
Rated current / Rated cross section		6.3 A / 2.5 mm²		
Rated short-time withstand current (1s)		300 A		
Rated voltage		500 V		
Impulse withstand voltage		6000 V		
Protection		IP20	NEMA 1	

Mounting instructions

Rail	TH 35-7.5, TH 35-15
Wire stripping length	9.5 mm 0.37 in
Tool	Flat screwdriver Ø 4 mm Ø 0.157 in
Torque	0.5 - 0.8 N.m 4.4 - 7.1 lb.in

The connecting capacity data for one Rigid: Solid/Stranded, or one Flexible conductor (when applicable) is a mandatory information required by IEC, UL and CSA standards (Copper conductors). All other data are provided as supplementary information only. For more details, please consult our CB, UL or CSA certificates and technical datasheet available on http://www.TE.com

RoHS — Gost R

Leakage current: 24 V < 4.5 mA; 110 V < 0.5 mA; 230 V < 0.7 mA

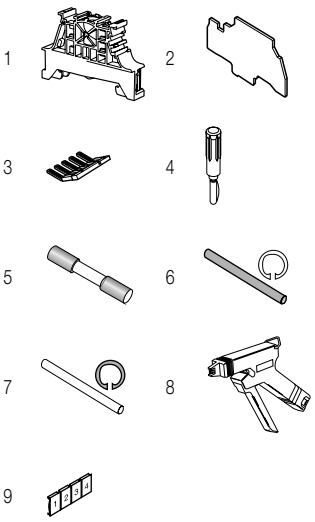

Accessories

	Description			Color	Type	Part Number		Pkg pce	Weight (1 pce) g
1	**End stops**	10 mm	0.394 in	Dark grey	BAM4	1SNK900001R0000		50	14.00
		5.2 mm	0.205 in		BAZ1	1SNK900002R0000		50	5.30
2	**End sections**	1.5 mm	0.059 in	Grey	FEDAD10	1SNA399758R2700		20	3.00
3	**Lateral jumper bars**	10 poles	35 A		PC81-10	1SNA173523R1100		10	5.00
4	**Test plugs**	DIA 2 mm	0.079 in	Black	FC2	1SNA007865R2600		100	
5	**Fuses**	0.5 A			FU520	1SNA008288R1500		10	
		1 A				1SNA008290R1300		10	
		2 A				1SNA008291R0000		10	
		3.15 A				1SNA008289R1600		10	
		5 A				1SNA008292R0100		10	
6	**Assembly rods**	2 poles			TGA8	1SNA168672R1100		10	1.00
		3 poles				1SNA168673R1200		10	
		4 poles				1SNA168674R1300		10	
7	**Spring retaining rings**				ANT	1SNA168675R1400		10	
8	**Tools**	Semi automatic tool			OUPAD	1SNA178944R0400		1	205.00
		Hand tool			OUMAD	1SNA179466R0600		1	29.00
9	**Terminal block markers**	Blank card		White	RC810	1SNA234000R0200		1	8.20

Complete list of accessories is indicated in the terminal block datasheet.
Some accessories such as jumper bars may modify the terminal block's ratings: complete information in the accessories catalogue pages.

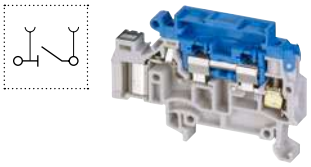

Disconnect IDC terminal blocks

Description		Color	Type	Part Number		Pkg pce	Weight (1 pce) g
Disconnect	Profile aligned with D4/8.SF.I.ADO	Grey, blue	D4/8.SNNT2.I.ADO2	1SNA399766R1700		50	13.00

Technical data valid for copper conductors only.

1SNC163023S0201 - Rev. B

D4/8.SN.I.ADO IDC terminal blocks

Disconnect with lever - with test socket - ADO screw clamp 8 mm 0.315 in spacing

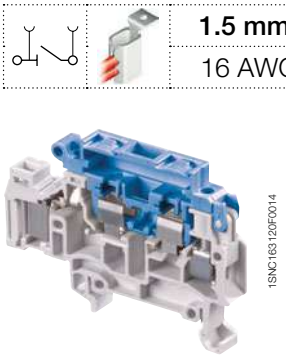

D4/8.SN.I.ADO

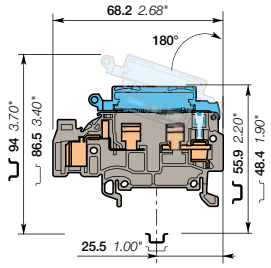

8 mm 0.315 in spacing

1.5 mm²
16 AWG

Description

- Disconnect terminal blocks aligned with fuse holder terminal blocks,
- With the TE Connectivity ADO System®, experience the fastest and most reliable connection on the market,
- This solution brings all the benefits of the ADO System® and allows installators to connect on standard screw clamp,
- Up to 2 wires per connection in the ADO System® connection.

Ordering details

Description		Color	Type	Part Number		Pkg pce	Weight (1 pce) g
Disconnect	With 2 test sockets DIA 2 mm 0.079 in	Grey, blue	D4/8.SNNT2.I.ADO	1SNA399779R2400		50	13.00

Main technical data

		IEC	UL	CSA
	Rigid: Solid/Stranded	0.34-1.5 mm²		
	Flexible without ferrule	0.34-1.5 mm²		
Screw clamp	Rigid: Solid/Stranded	0.2-4 mm²		
	Flexible without ferrule	0.22-4 mm²		
	Flexible with insulated ferrule			
	Gauge	A4		
Rated current / Rated cross section		10 A / 1.5 mm²		
Rated short-time withstand current (1s)		180 A		
Rated voltage		630 V		
Impulse withstand voltage		8000 V		
Protection		IP20	NEMA 1	

Mounting instructions

Rail	TH 35-7.5, TH 35-15
Wire stripping length	9.5 mm 0.37 in
Tool	Flat screwdriver Ø 4 mm Ø 0.157 in
Torque	0.5 - 0.8 Nm 4.4 - 7.1 lb.in

The connecting capacity data for one Rigid: Solid/Stranded, or one Flexible conductor (when applicable) is a mandatory information required by IEC, UL and CSA standards (Copper conductors). All other data are provided as supplementary information only. For more details, please consult our CB, UL or CSA certificates and technical datasheet available on http://www.TE.com

Gost R

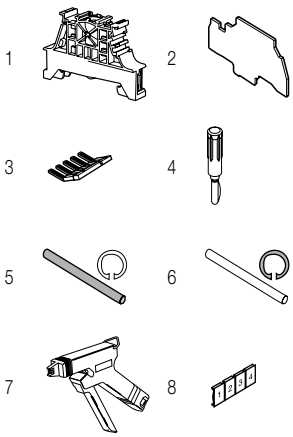

Accessories

	Description			Color	Type	Part Number		Pkg pce	Weight (1 pce) g
1	**End stops**	10 mm	0.394 in	Dark grey	BAM4	1SNK900001R0000		50	14.00
		5.2 mm	0.205 in		BAZ1	1SNK900002R0000		50	5.30
2	**End sections**	1.5 mm	0.059 in	Grey	FEDAD10	1SNA399758R2700		20	3.00
3	**Lateral jumper bars**	10 poles	35 A		PC81-10	1SNA173523R1100		10	5.00
4	**Test plugs**	DIA 2 mm	0.079 in	Black	FC2	1SNA007865R2600		100	
5	**Assembly rods**	2 poles			TGA8	1SNA168672R1100		10	1.00
		3 poles				1SNA168673R1200		10	
		4 poles				1SNA168674R1300		10	
6	**Spring retaining rings**				ANT	1SNA168675R1400		10	
7	**Tools**	Semi automatic tool			OUPAD	1SNA178944R0400		1	205.00
		Hand tool			OUMAD	1SNA179466R0600		1	29.00
8	**Terminal block markers**	Blank card		White	RC810	1SNA234000R0200		1	8.20

Complete list of accessories is indicated in the terminal block datasheet.
Some accessories such as jumper bars may modify the terminal block's ratings: complete information in the accessories catalogue pages.

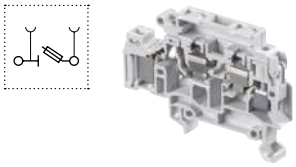

Fuse IDC terminal blocks

Description		Color	Type	Part Number		Pkg pce	Weight (1 pce) g
Fuse	Profile aligned with D4/8.SN.I.ADO	Grey	D4/8.SFT2.I.ADO	1SNA399777R1200		50	13.00

Technical data valid for copper conductors only.

1SNC163100S0201 - Rev. A

D4/8.SN.I.ADO IDC terminal blocks

Disconnect with lever - with test socket - ADO screw clamp 8 mm 0.315 in spacing

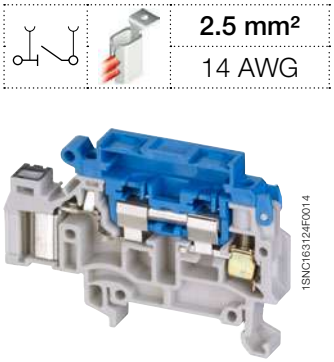

2.5 mm²
14 AWG

D4/8.SN.I.ADO

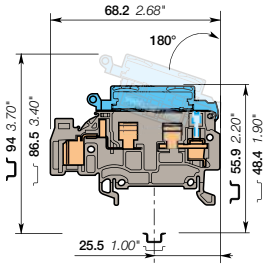

8 mm 0.315 in spacing

Description

- Disconnect terminal blocks aligned with fuse holder terminal blocks,
- With the TE Connectivity ADO System®, experience the fastest and most reliable connection on the market,
- This solution brings all the benefits of the ADO System® and allows installators to connect on standard screw clamp,
- Up to 2 wires per connection in the ADO System® connection.

Ordering details

Description		Color	Type	Part Number		Pkg pce	Weight (1 pce) g
Disconnect	With 2 test sockets DIA 2 mm 0.079 in, with black marking for wire size 1-2.5 mm² (16-14 AWG)	Grey, blue	D4/8.SNNT2.I.ADO2	1SNA399766R1700		50	13.00

Main technical data

		IEC	UL	CSA
ADO	Rigid: Solid/Stranded	1-2.5 mm²		
	Flexible without ferrule	1-2.5 mm²		
Screw clamp	Rigid: Solid/Stranded	0.2-4 mm²		
	Flexible without ferrule	0.22-4 mm²		
	Flexible with insulated ferrule			
	Gauge	A4		
Rated current / Rated cross section		6.3 A / 2.5 mm²		
Rated short-time withstand current (1s)		300 A		
Rated voltage		630 V		
Impulse withstand voltage		8000 V		
Protection		IP20	NEMA 1	

Mounting instructions

Rail	TH 35-7.5, TH 35-15
Wire stripping length	9.5 mm 0.37 in
Tool	Flat screwdriver Ø 4 mm Ø 0.157 in
Torque	0.5 - 0.8 N.m 4.4 - 7.1 lb.in

The connecting capacity data for one Rigid: Solid/Stranded, or one Flexible conductor (when applicable) is a mandatory information required by IEC, UL and CSA standards (Copper conductors). All other data are provided as supplementary information only. For more details, please consult our CB, UL or CSA certificates and technical datasheet available on http://www.TE.com

RoHS
Gost R

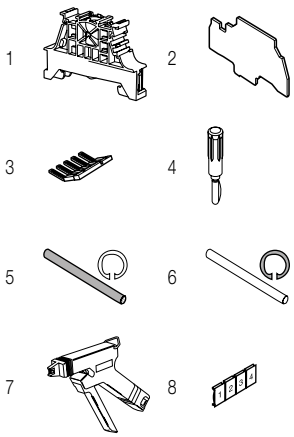

Accessories

	Description			Color	Type	Part Number		Pkg pce	Weight (1 pce) g
1	**End stops**	10 mm	0.394 in	Dark grey	BAM4	1SNK900001R0000		50	14.00
		5.2 mm	0.205 in		BAZ1	1SNK900002R0000		50	5.30
2	**End sections**	1.5 mm	0.059 in	Grey	FEDAD10	1SNA399758R2700		20	3.00
3	**Lateral jumper bars**	10 poles	35 A		PC81-10	1SNA173523R1100		10	5.00
4	**Test plugs**	DIA 2 mm	0.079 in	Black	FC2	1SNA007865R2600		100	
5	**Assembly rods**	2 poles			TGA8	1SNA168672R1100		10	1.00
		3 poles				1SNA168673R1200		10	
		4 poles				1SNA168674R1300		10	
6	**Spring retaining rings**				ANT	1SNA168675R1400		10	
7	**Tools**	Semi automatic tool			OUPAD	1SNA178944R0400		1	205.00
		Hand tool			OUMAD	1SNA179466R0600		1	29.00
8	**Terminal block markers**	Blank card		White	RC810	1SNA234000R0200		1	8.20

Complete list of accessories is indicated in the terminal block datasheet.
Some accessories such as jumper bars may modify the terminal block's ratings: complete information in the accessories catalogue pages.

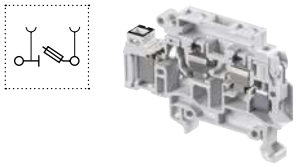

Fuse IDC terminal blocks

Description		Color	Type	Part Number		Pkg pce	Weight (1 pce) g
Fuse	Profile aligned with D4/8.SN.I.ADO	Grey	D4/8.SFT2.I.ADO2	1SNA399762R1300		50	13.00

Technical data valid for copper conductors only.

1SNC163025S0201 - Rev. A

D1/5.ADO IDC terminal blocks

Feed-through ADO - ADO - 5 mm 0.197 in spacing

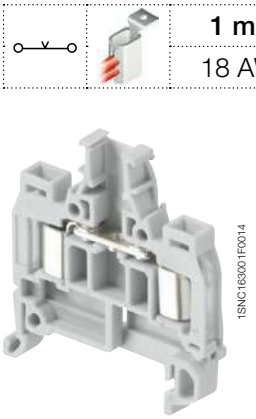

D1/5.ADO

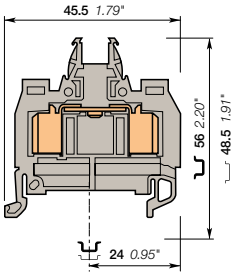

5 mm 0.197 in spacing

1 mm²	18 AWG

Description

- With the TE Connectivity ADO System®, experience the fastest and most reliable connection on the market,
- Designed for control applications exposed to severe constrains (vibrations, shocks, corrosion etc.),
- Up to 2 wires per connection.

Ordering details

Description		Color	Type	Part Number		Pkg pce	Weight (1 pce) g
Feed-through	Feed-through	Grey	D1/5.ADO	1SNA199563R2400		50	5.00
		Blue	D1/5.N.ADO	1SNA199565R2600		50	5.00
		Orange	D1/5.ADO	1SNA199564R2500		50	5.00

Main technical data

		IEC	UL	CSA
ADO	Rigid: Solid/Stranded	0.2-1 mm²		22-18 AWG
	Flexible without ferrule	0.22-1 mm²		
Screw clamp	Rigid: Solid/Stranded			
	Flexible without ferrule			
	Flexible with insulated ferrule			
	Gauge			
Rated current / Rated cross section		13.5 A / 1 mm²		7 A / 18 AWG
Rated short-time withstand current (1s)		120 A		
Rated voltage		1000 V		600 V
Impulse withstand voltage		8000 V		
Protection		IP20	NEMA 1	

Mounting instructions

Rail	TH 35-7.5, TH 35-15
Wire stripping length	
Tool	
Torque	

The connecting capacity data for one Rigid: Solid/Stranded, or one Flexible conductor (when applicable) is a mandatory information required by IEC, UL and CSA standards (Copper conductors). All other data are provided as supplementary information only. For more details, please consult our CB, UL or CSA certificates and technical datasheet available on http://www.TE.com

RoHS RoHS | cCSAus | Gost R

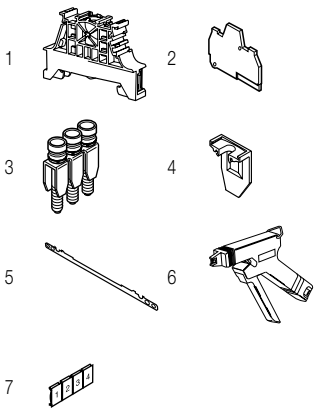

Accessories

	Description			Color	Type	Part Number		Pkg pce	Weight (1 pce) g
1	**End stops**	10 mm	0.394 in	Dark grey	BAM4	1SNK900001R0000		50	14.00
		5.2 mm	0.205 in		BAZ1	1SNK900002R0000		50	5.30
2	**End sections**	3 mm	0.118 in	Grey	FEMAD3	1SNA199341R0500		20	2.50
3	**Jumper bars**	2 poles	24 A		BJMI5-2	1SNA176278R1600		10	3.30
		3 poles			BJMI5-3	1SNA176279R1700		10	5.00
		4 poles			BJMI5-4	1SNA176280R0500		10	6.70
		5 poles			BJMI5-5	1SNA176281R2200		10	8.40
		10 poles			BJMI5-10	1SNA176282R2300		10	16.90
4	**Circuit separators**	0 mm	0 in	Grey	SCAD5	1SNA199551R2000		10	0.30
5	**Shield connectors**				CBM5	1SNA178745R1400		50	
6	**Tools**	Semi automatic tool			OUPAD	1SNA178944R0400		1	205.00
		Hand tool			OUMAD	1SNA179466R0600		1	29.00
7	**Terminal block markers**	Blank card		White	RC510	1SNA231000R0700		1	5.20

Complete list of accessories is indicated in the terminal block datasheet.
Some accessories such as jumper bars may modify the terminal block's ratings: complete information in the accessories catalogue pages.

Ground IDC terminal blocks

Description		Color	Type	Part Number		Pkg pce	Weight (1 pce) g
Ground	Profile aligned with D1/5.ADO	Green-yellow	D1/5.P.ADO	1SNA399031R2200		50	9.00

Technical data valid for copper conductors only.

1SNC163039S0201 - Rev. A

D1.5/6.ADO IDC terminal blocks

Feed-through ADO - ADO - 6 mm 0.236 in spacing

1.5 mm²
16 AWG

D1.5/6.ADO

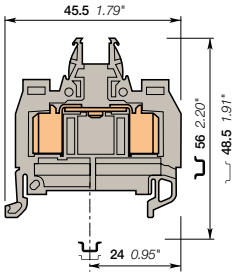

6 mm 0.236 in spacing

Description

- With the TE Connectivity ADO System®, experience the fastest and most reliable connection on the market,
- Designed for control applications exposed to severe constrains (vibrations, shocks, corrosion etc.),
- Up to 2 wires per connection.

Ordering details

Description	Color	Type	Part Number	Pkg pce	Weight (1 pce) g
Feed-through	Grey	D1.5/6.ADO	1SNA199051R2600	50	6.00
	Blue	D1.5/6.N.ADO	1SNA199053R2000	50	6.00
	Orange	D1.5/6.ADO	1SNA199052R2700	50	6.00

Main technical data

		IEC	UL	CSA
ADO	Rigid: Solid/Stranded	0.34-1.5 mm²	22-14 AWG	22-16 AWG
	Flexible without ferrule	0.34-1.5 mm²		
Screw clamp	Rigid: Solid/Stranded			
	Flexible without ferrule			
	Flexible with insulated ferrule			
	Gauge			
Rated current / Rated cross section		17.5 A / 1.5 mm²	10 A / 14 AWG	18 A / 16 AWG
Rated short-time withstand current (1s)		180 A		
Rated voltage		1000 V	600 V	600 V
Impulse withstand voltage		8000 V		
Protection		IP20	NEMA 1	

Mounting instructions

Rail	TH 35-7.5, TH 35-15
Wire stripping length	
Tool	
Torque	

The connecting capacity data for one Rigid: Solid/Stranded, or one Flexible conductor (when applicable) is a mandatory information required by IEC, UL and CSA standards (Copper conductors). All other data are provided as supplementary information only. For more details, please consult our CB, UL or CSA certificates and technical datasheet available on http://www.TE.com

RoHS RoHS · USR · cCSAus · Gost R

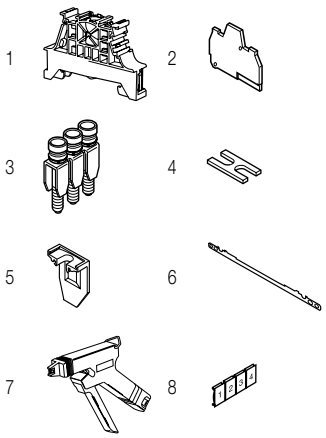

Accessories

	Description			Color	Type	Part Number	Pkg pce	Weight (1 pce) g
1	**End stops**	10 mm	0.394 in	Dark grey	BAM4	1SNK900001R0000	50	14.00
		5.2 mm	0.205 in		BAZ1	1SNK900002R0000	50	5.30
2	**End sections**	3 mm	0.118 in	Grey	FEMAD3	1SNA199341R0500	20	2.50
3	**Jumper bars**	2 poles	32 A		BJMI6-2	1SNA176663R0000	10	4.40
		3 poles			BJMI6-3	1SNA176664R0100	10	6.70
		4 poles			BJMI6-4	1SNA176665R0200	10	8.90
		5 poles			BJMI6-5	1SNA176666R0300	10	11.20
		10 poles			BJMI6-10	1SNA176667R0400	10	22.40
4	**Cross spacing jumpers**	5 mm 0.200 in - 6 mm 0.236 in - 8 mm 0.315 in			EL6	1SNA173627R2100	10	0.10
		Universal screw jumper bar kit N°I			BJDP1	1SNA179623R0300	10	7.00
		Universal screw jumper bar kit N°III			BJDP3	1SNA179625R0500	10	5.00
5	**Circuit separators**	0 mm	0 in	Grey	SCAD	1SNA196896R0000	10	
6	**Shield connectors**				CBM5	1SNA178745R1400	50	
7	**Tools**	Semi automatic tool			OUPAD	1SNA178944R0400	1	205.00
		Hand tool			OUMAD	1SNA179466R0600	1	29.00
8	**Terminal block markers**	Blank card		White	RC610	1SNA233000R0100	1	7.50

Complete list of accessories is indicated in the terminal block datasheet.
Some accessories such as jumper bars may modify the terminal block's ratings: complete information in the accessories catalogue pages.

Ground IDC terminal blocks

Description		Color	Type	Part Number	Pkg pce	Weight (1 pce) g
Ground	Profile aligned with D1.5/6.ADO	Green-yellow	D1.5/6.P.ADO	1SNA199098R2600	50	6.00

Technical data valid for copper conductors only.

1SNC163040S0201 - Rev. A

D2.5/8.ADO IDC terminal blocks

Feed-through ADO - ADO - 8 mm 0.315 in spacing

D2.5/8.ADO

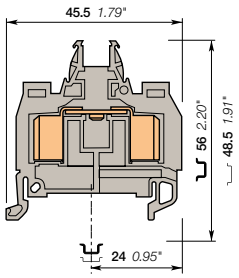

8 mm 0.315 in spacing

2.5 mm²
14 AWG

Description

- With the TE Connectivity ADO System®, experience the fastest and most reliable connection on the market,
- Designed for control applications exposed to severe constrains (vibrations, shocks, corrosion etc.),
- Up to 2 wires per connection.

Ordering details

Description		Color	Type	Part Number		Pkg pce	Weight (1 pce) g
Feed-through	With black marking for wire size 1-2.5 mm² (16-14 AWG)	Grey	D2.5/8.ADO	1SNA199059R0600		50	9.00
		Blue	D2.5/8.N.ADO	1SNA199061R2000		50	9.00
		Orange	D2.5/8.ADO	1SNA199060R0300		50	9.00

Main technical data

		IEC	UL	CSA
ADO	Rigid: Solid/Stranded	1-2.5 mm²	16-14 AWG	16-14 AWG
	Flexible without ferrule	1-2.5 mm²		
Screw clamp	Rigid: Solid/Stranded			
	Flexible without ferrule			
	Flexible with insulated ferrule			
	Gauge			
Rated current / Rated cross section		24 A / 2.5 mm²	15 A / 14 AWG	25 A / 14 AWG
Rated short-time withstand current (1s)		300 A		
Rated voltage		1000 V	600 V	600 V
Impulse withstand voltage		8000 V		
Protection		IP20	NEMA 1	

Mounting instructions

Rail	TH 35-7.5, TH 35-15
Wire stripping length	
Tool	
Torque	

The connecting capacity data for one Rigid: Solid/Stranded, or one Flexible conductor (when applicable) is a mandatory information required by IEC, UL and CSA standards (Copper conductors). All other data are provided as supplementary information only. For more details, please consult our CB, UL or CSA certificates and technical datasheet available on http://www.TE.com

RoHS RoHS · USR · cCSAus · Gost R

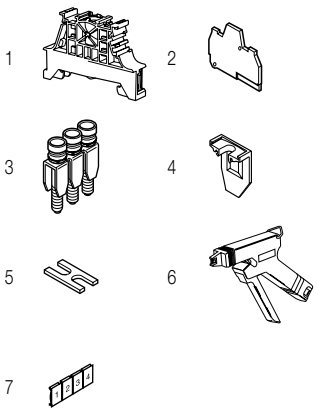

Accessories

	Description			Color	Type	Part Number		Pkg pce	Weight (1 pce) g
1	**End stops**	10 mm	0.394 in	Dark grey	BAM4	1SNK900001R0000		50	14.00
		5.2 mm	0.205 in		BAZ1	1SNK900002R0000		50	5.30
2	**End sections**	3 mm	0.118 in	Grey	FEMAD3	1SNA199341R0500		20	2.50
3	**Jumper bars**	2 poles	41 A		BJMI8-2	1SNA176669R1600		10	4.50
		3 poles			BJMI8-3	1SNA176670R1300		10	6.00
		4 poles			BJMI8-4	1SNA176671R0000		10	10.00
		5 poles			BJMI8-5	1SNA176672R0100		10	12.22
		10 poles			BJMI8-10	1SNA176673R0200		10	20.00
4	**Circuit separators**	0 mm	0 in	Grey	SCAD	1SNA196896R0000		10	
5	**Cross spacing jumpers**	5 mm 0.200 in - 6 mm 0.236 in - 8 mm 0.315 in			EL6	1SNA173627R2100		10	0.10
		Universal screw jumper bar kit N°I			BJDP1	1SNA179623R0300		10	7.00
		Universal screw jumper bar kit N°III			BJDP3	1SNA179625R0500		10	5.00
6	**Tools**	Semi automatic tool			OUPAD	1SNA178944R0400		1	205.00
		Hand tool			OUMAD	1SNA179466R0600		1	29.00
7	**Terminal block markers**	Blank card		White	RC810	1SNA234000R0200		1	8.20

Complete list of accessories is indicated in the terminal block datasheet.
Some accessories such as jumper bars may modify the terminal block's ratings: complete information in the accessories catalogue pages.

Ground IDC terminal blocks

Description		Color	Type	Part Number		Pkg pce	Weight (1 pce) g
Ground	Profile aligned with D2.5/8.ADO	Green-Yellow	D2.5/8.P.ADO	1SNA199091R1700		50	9.00

Technical data valid for copper conductors only.

1SNC163041S0201 - Rev. A

D4/8.ADO IDC terminal blocks

Feed-through ADO-ADO - 8 mm 0.315 in spacing

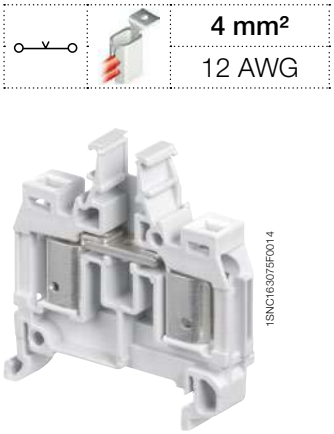

4 mm²
12 AWG

D4/8.ADO

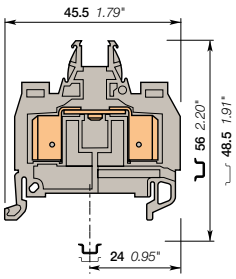

8 mm 0.315 in spacing

Description

- With the TE Connectivity ADO System®, experience the fastest and most reliable connection on the market,
- Designed for control applications exposed to severe constrains (vibrations, shocks, corrosion etc.).

Ordering details

Description		Color	Type	Part Number		Pkg pce	Weight (1 pce) g
Feed-through	With white marking for wire size 4 mm² (12 AWG)	Grey	D4/8.ADO	1SNA399244R1400		50	9.00
		Blue	D4/8.N.ADO	1SNA399318R1600		50	9.00
		Orange	D4/8.ADO	1SNA399801R0400		50	9.00

Main technical data

		IEC	UL	CSA
ADO	Rigid: Solid/Stranded	4 mm²		14-12 AWG
	Flexible without ferrule	4 mm²		
Screw clamp	Rigid: Solid/Stranded			
	Flexible without ferrule			
	Flexible with insulated ferrule			
	Gauge			
Rated current / Rated cross section		32 A / 4 mm²		25 A / 12 AWG
Rated short-time withstand current (1s)		480 A		
Rated voltage		1000 V		600 V
Impulse withstand voltage		8000 V		
Protection		IP20	NEMA 1	

Mounting instructions

Rail		TH 35-7.5, TH 35-15
Wire stripping length		
Tool		
Torque		

The connecting capacity data for one Rigid: Solid/Stranded, or one Flexible conductor (when applicable) is a mandatory information required by IEC, UL and CSA standards (Copper conductors). All other data are provided as supplementary information only. For more details, please consult our CB, UL or CSA certificates and technical datasheet available on http://www.TE.com

RoHS RoHS | cCSAus | Gost R

Accessories

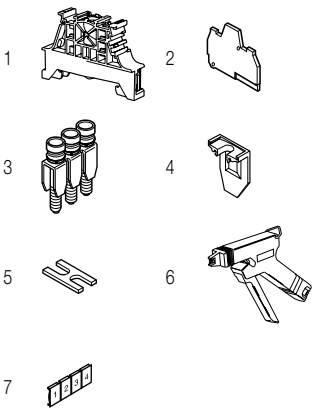

	Description			Color	Type	Part Number		Pkg pce	Weight (1 pce) g
1	**End stops**	10 mm	0.394 in	Dark grey	BAM4	1SNK900001R0000		50	14.00
		5.2 mm	0.205 in		BAZ1	1SNK900002R0000		50	5.30
2	**End sections**	3 mm	0.118 in	Grey	FEMAD3	1SNA199341R0500		20	2.50
3	**Jumper bars**	2 poles	41 A		BJMI8-2	1SNA176669R1600		10	4.50
		3 poles			BJMI8-3	1SNA176670R1300		10	6.00
		4 poles			BJMI8-4	1SNA176671R0000		10	10.00
		5 poles			BJMI8-5	1SNA176672R0100		10	12.22
		10 poles			BJMI8-10	1SNA176673R0200		10	20.00
4	**Circuit separators**	0 mm	0 in	Grey	SCAD	1SNA196896R0000		10	
5	**Cross spacing jumpers**	5 mm 0.200 in - 6 mm 0.236 in - 8 mm 0.315 in			EL6	1SNA173627R2100		10	0.10
		Universal screw jumper bar kit N°I			BJDP1	1SNA179623R0300		10	7.00
		Universal screw jumper bar kit N°III			BJDP3	1SNA179625R0500		10	5.00
6	**Tools**	Semi automatic tool			OUPAD	1SNA178944R0400		1	205.00
		Hand tool			OUMAD	1SNA179466R0600		1	29.00
7	**Terminal block markers**	Blank card		White	RC810	1SNA234000R0200		1	8.20

Complete list of accessories is indicated in the terminal block datasheet.
Some accessories such as jumper bars may modify the terminal block's ratings: complete information in the accessories catalogue pages.

Ground IDC terminal blocks

Description		Color	Type	Part Number		Pkg pce	Weight (1 pce) g
Ground	Profile aligned with D4/8.ADO	Green-Yellow	D4/8.P.ADO	1SNA399250R2600		50	9.00

Technical data valid for copper conductors only.

1SNC163042S0201 - Rev. A

D1/5.P.ADO IDC terminal blocks

Ground ADO-ADO - 5 mm 0.197 in spacing

D1/5.P.ADO

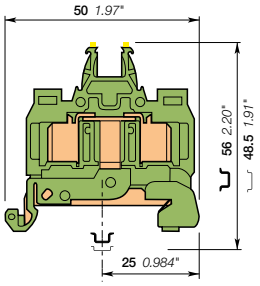

5 mm 0.197 in spacing

	1 mm²
	18 AWG

Description

- Protect your installation in the event of a short-circuit thanks to our screwless rail contact non operator dependent,
- Secure mounting or removal from the rail,
- With the TE Connectivity ADO System®, experience the fastest and most reliable connection on the market,
- Up to 2 wires per connection.

Ordering details

Description		Color	Type	Part Number		Pkg pce	Weight (1 pce) g
Ground	Screwless rail connection	Green-yellow	D1/5.P.ADO	1SNA399031R2200		50	9.00

Main technical data

		IEC	UL	CSA
ADO	Rigid: Solid/Stranded	0.2-1 mm²		22-18 AWG
	Flexible without ferrule	0.22-1 mm²		
Screw clamp	Rigid: Solid/Stranded			
	Flexible without ferrule			
	Flexible with insulated ferrule			
	Gauge			
Rated cross section		1 mm²		18 AWG
Rated short-time withstand current (1s)		120 A		
Protection		IP20	NEMA 1	

Mounting instructions

Rail	TH 35-7.5, TH 35-15
Wire stripping length	
Tool	
Torque	

The connecting capacity data for one Rigid: Solid/Stranded, or one Flexible conductor (when applicable) is a mandatory information required by IEC, UL and CSA standards (Copper conductors). All other data are provided as supplementary information only. For more details, please consult our CB, UL or CSA certificates and technical datasheet available on http://www.TE.com

RoHS cCSAus Gost R

Accessories

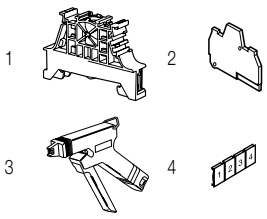

	Description			Color	Type	Part Number		Pkg pce	Weight (1 pce) g
1	**End stops**	10 mm	0.394 in	Dark grey	BAM4	1SNK900001R0000		50	14.00
		5.2 mm	0.205 in		BAZ1	1SNK900002R0000		50	5.30
2	**End sections**	3 mm	0.118 in	Grey	FEMAD3	1SNA199341R0500		20	2.50
3	**Tools**	Semi automatic tool			OUPAD	1SNA178944R0400		1	205.00
		Hand tool			OUMAD	1SNA179466R0600		1	29.00
4	**Terminal block markers**	Blank card		White	RC510	1SNA231000R0700		1	5.20

Complete list of accessories is indicated in the terminal block datasheet.
Some accessories such as jumper bars may modify the terminal block's ratings: complete information in the accessories catalogue pages.

Technical data valid for copper conductors only.

1SNC163048S0201 - Rev. A

D1.5/6.P.ADO IDC terminal blocks

Ground ADO-ADO - 6 mm 0.236 in spacing

1.5 mm²
16 AWG

D1.5/6.P.ADO

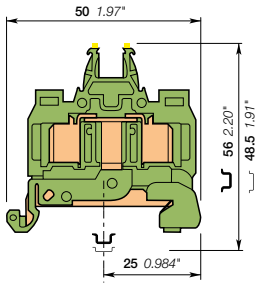

6 mm 0.236 in spacing

Description

- Protect your installation in the event of a short-circuit thanks to our screwless rail contact non operator dependent,
- Secure mounting or removal from the rail,
- With the TE Connectivity ADO System®, experience the fastest and most reliable connection on the market,
- Up to 2 wires per connection.

Ordering details

Description		Color	Type	Part Number		Pkg pce	Weight (1 pce) g
Ground	Screwless rail connection	Green-yellow	D1.5/6.P.ADO	1SNA199098R2600		50	6.00

Main technical data

		IEC	UL	CSA
ADO	Rigid: Solid/Stranded	0.34-1.5 mm²	22-16 AWG	22-16 AWG
	Flexible without ferrule	0.34-1.5 mm²		
Screw clamp	Rigid: Solid/Stranded			
	Flexible without ferrule			
	Flexible with insulated ferrule			
	Gauge			
Rated cross section		1.5 mm²	16 AWG	16 AWG
Rated short-time withstand current (1s)		180 A		
Protection		IP20	NEMA 1	

Mounting instructions

Rail		TH 35-7.5, TH 35-15
Wire stripping length		
Tool		
Torque		

The connecting capacity data for one Rigid: Solid/Stranded, or one Flexible conductor (when applicable) is a mandatory information required by IEC, UL and CSA standards (Copper conductors). All other data are provided as supplementary information only. For more details, please consult our CB, UL or CSA certificates and technical datasheet available on http://www.TE.com

RoHS USR cCSAus Gost R

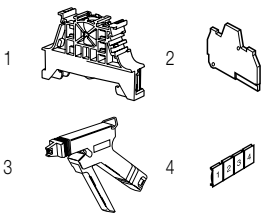

Accessories

	Description			Color	Type	Part Number		Pkg pce	Weight (1 pce) g
1	**End stops**	10 mm	0.394 in	Dark grey	BAM4	1SNK900001R0000		50	14.00
		5.2 mm	0.205 in		BAZ1	1SNK900002R0000		50	5.30
2	**End sections**	3 mm	0.118 in	Grey	FEMAD3	1SNA199341R0500		20	2.50
3	**Tools**	Semi automatic tool			OUPAD	1SNA178944R0400		1	205.00
		Hand tool			OUMAD	1SNA179466R0600		1	29.00
4	**Terminal block markers**	Blank card		White	RC610	1SNA233000R0100		1	7.50

Complete list of accessories is indicated in the terminal block datasheet.
Some accessories such as jumper bars may modify the terminal block's ratings: complete information in the accessories catalogue pages.

Technical data valid for copper conductors only.

1SNC1630495 0201 - Rev. A

D2.5/8.P.ADO IDC terminal blocks

Ground ADO-ADO - 8 mm 0.315 in spacing

D2.5/8.P.ADO

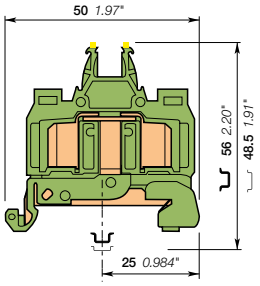

8 mm 0.315 in spacing

	2.5 mm²
	14 AWG

Description

- Protect your installation in the event of a short-circuit thanks to our screwless rail contact non operator dependent,
- Secure mounting or removal from the rail,
- With the TE Connectivity ADO System®, experience the fastest and most reliable connection on the market,
- Up to 2 wires per connection.

Ordering details

Description		Color	Type	Part Number		Pkg pce	Weight (1 pce) g
Ground	Screwless rail connection with black marking for wire size 1-2.5 mm² (16-14 AWG)	Green-yellow	D2.5/8.P.ADO	1SNA199091R1700		50	9.00

Main technical data

		IEC	UL	CSA
ADO	Rigid: Solid/Stranded	1-2.5 mm²	16-14 AWG	
	Flexible without ferrule	1-2.5 mm²		
Screw clamp	Rigid: Solid/Stranded			
	Flexible without ferrule			
	Flexible with insulated ferrule			
	Gauge			
Rated cross section		2.5 mm²	14 AWG	
Rated short-time withstand current (1s)		300 A		
Protection		IP20	NEMA 1	

Mounting instructions

Rail		TH 35-7.5, TH 35-15
Wire stripping length		
Tool		
Torque		

The connecting capacity data for one Rigid: Solid/Stranded, or one Flexible conductor (when applicable) is a mandatory information required by IEC, UL and CSA standards (Copper conductors). All other data are provided as supplementary information only. For more details, please consult our CB, UL or CSA certificates and technical datasheet available on http://www.TE.com

RoHS RoHS USR Gost R

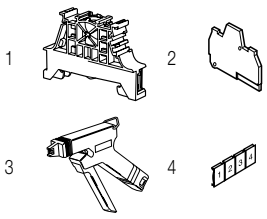

Accessories

	Description			Color	Type	Part Number		Pkg pce	Weight (1 pce) g
1	**End stops**	10 mm	0.394 in	Dark grey	BAM4	1SNK900001R0000		50	14.00
		5.2 mm	0.205 in		BAZ1	1SNK900002R0000		50	5.30
2	**End sections**	3 mm	0.118 in	Grey	FEMAD3	1SNA199341R0500		20	2.50
3	**Tools**	Semi automatic tool			OUPAD	1SNA178944R0400		1	205.00
		Hand tool			OUMAD	1SNA179466R0600		1	29.00
4	**Terminal block markers**	Blank card		White	RC810	1SNA234000R0200		1	8.20

Complete list of accessories is indicated in the terminal block datasheet.
Some accessories such as jumper bars may modify the terminal block's ratings: complete information in the accessories catalogue pages.

Technical data valid for copper conductors only.

1SNC163050S0201 - Rev. A

D4/8.P.ADO IDC terminal blocks

Ground ADO-ADO - 8 mm 0.315 in spacing

4 mm²
12 AWG

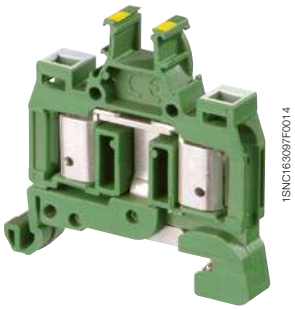

D4/8.P.ADO

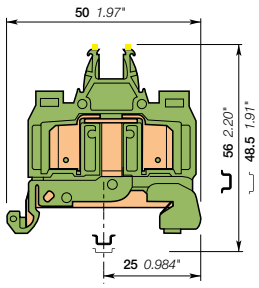

8 mm 0.315 in spacing

Description

- Protect your installation in the event of a short-circuit thanks to our screwless rail contact non operator dependent,
- Secure mounting or removal from the rail,
- With the TE Connectivity ADO System®, experience the fastest and most reliable connection on the market,

Ordering details

Description		Color	Type	Part Number		Pkg pce	Weight (1 pce) g
Ground	Screwless rail connection, with white marking for wire size 4 mm² (12 AWG)	Green-yellow	D4/8.P.ADO	1SNA399250R2600		50	9.00

Main technical data

		IEC	UL	CSA
ADO	Rigid: Solid/Stranded	4 mm²		14-12 AWG
	Flexible without ferrule	4 mm²		
Screw clamp	Rigid: Solid/Stranded			
	Flexible without ferrule			
	Flexible with insulated ferrule			
	Gauge			
Rated cross section		4 mm²		12 AWG
Rated short-time withstand current (1s)		480 A		
Protection		IP20	NEMA 1	

Mounting instructions

Rail		TH 35-7.5, TH 35-15
Wire stripping length		
Tool		
Torque		

The connecting capacity data for one Rigid: Solid/Stranded, or one Flexible conductor (when applicable) is a mandatory information required by IEC, UL and CSA standards (Copper conductors). All other data are provided as supplementary information only. For more details, please consult our CB, UL or CSA certificates and technical datasheet available on http://www.TE.com

RoHS cCSAus Gost R

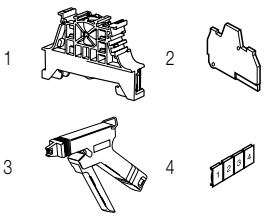

Accessories

	Description			Color	Type	Part Number		Pkg pce	Weight (1 pce) g
1	**End stops**	10 mm	0.394 in	Dark grey	BAM4	1SNK900001R0000		50	14.00
		5.2 mm	0.205 in		BAZ1	1SNK900002R0000		50	5.30
2	**End sections**	3 mm	0.118 in	Grey	FEMAD3	1SNA199341R0500		20	2.50
3	**Tools**	Semi automatic tool			OUPAD	1SNA178944R0400		1	205.00
		Hand tool			OUMAD	1SNA179466R0600		1	29.00
4	**Terminal block markers**	Blank card		White	RC810	1SNA234000R0200		1	8.20

Complete list of accessories is indicated in the terminal block datasheet.
Some accessories such as jumper bars may modify the terminal block's ratings: complete information in the accessories catalogue pages.

Technical data valid for copper conductors only.

1SNC163051S0201 - Rev. A

D1.5/6.D2.ADO IDC terminal blocks

Double deck with 2 feed-through circuits ADO-ADO 6 mm 0.236 in spacing

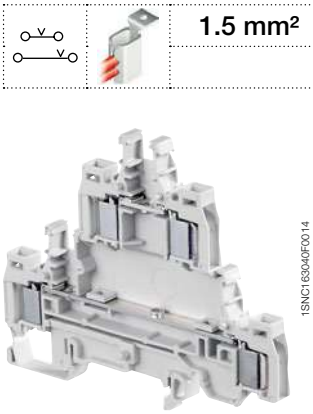

D1.5/6.D2.ADO

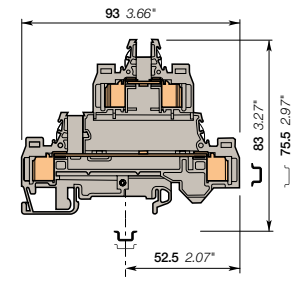

6 mm 0.236 in spacing

1.5 mm²

Description

- Save space with 2 decks terminal block,
- With the TE Connectivity ADO System®, experience the fastest and most reliable connection on the market,
- Designed for control applications exposed to severe constrains (vibrations, shocks, corrosion etc.),
- Up to 2 wires per connection.

Ordering details

Description		Color	Type	Part Number		Pkg pce	Weight (1 pce) g
Feed-through	With 2 feed-through circuits	Grey	D1.5/6.D2.ADO	1SNA199480R2600		50	18.00

Main technical data

		IEC	UL	CSA
ADO	Rigid: Solid/Stranded	0.28-1.5 mm²		
	Flexible without ferrule	0.34-1.5 mm²		
Screw clamp	Rigid: Solid/Stranded			
	Flexible without ferrule			
	Flexible with insulated ferrule			
	Gauge			
Rated current / Rated cross section		17.5 A / 1.5 mm²		
Rated short-time withstand current (1s)		180 A		
Rated voltage		800 V		
Impulse withstand voltage		6000 V		
Protection		IP20	NEMA 1	

Mounting instructions

Rail	TH 35-7.5, TH 35-15
Wire stripping length	
Tool	
Torque	

The connecting capacity data for one Rigid: Solid/Stranded, or one Flexible conductor (when applicable) is a mandatory information required by IEC, UL and CSA standards (Copper conductors). All other data are provided as supplementary information only. For more details, please consult our CB, UL or CSA certificates and technical datasheet available on http://www.TE.com

RoHS RoHS · Gost R

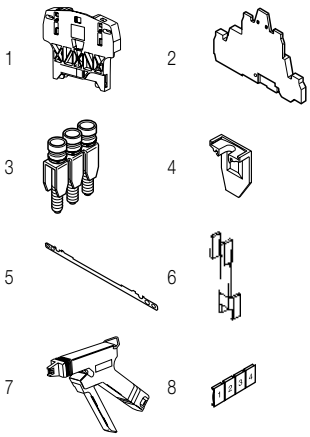

Accessories

	Description			Color	Type	Part Number		Pkg pce	Weight (1 pce) g
1	**End stops**	10 mm	0.394 in	Dark grey	BAZH1	1SNK900102R0000		20	24.00
2	**End sections**	5 mm	0.197 in	Grey	FED2AD2	1SNA199476R2500		20	7.00
3	**Jumper bars**	2 poles	32 A		BJMI6-2	1SNA176663R0000		10	4.40
		3 poles			BJMI6-3	1SNA176664R0100		10	6.70
		4 poles			BJMI6-4	1SNA176665R0200		10	8.90
		5 poles			BJMI6-5	1SNA176666R0300		10	11.20
		10 poles			BJMI6-10	1SNA176667R0400		10	22.40
4	**Circuit separators**	0 mm	0 in	Grey	SCAD	1SNA196896R0000		10	
5	**Shield connectors**				CBD2S	1SNA178408R1400		50	
6	**Inner deck jumper bars**	Inner deck jumper bars			ITVE	1SNA179694R0300		20	1.40
7	**Tools**	Semi automatic tool			OUPAD	1SNA178944R0400		1	205.00
		Hand tool			OUMAD	1SNA179466R0600		1	29.00
8	**Terminal block markers**	Blank card		White	RC610	1SNA233000R0100		1	7.50

Complete list of accessories is indicated in the terminal block datasheet.
Some accessories such as jumper bars may modify the terminal block's ratings: complete information in the accessories catalogue pages.

Technical data valid for copper conductors only.

1SNC163043S0201 - Rev. A

D1/5.SNT2.ADO IDC terminal blocks

Disconnect with blade - with test socket ADO-ADO - 5 mm 0.197 in spacing

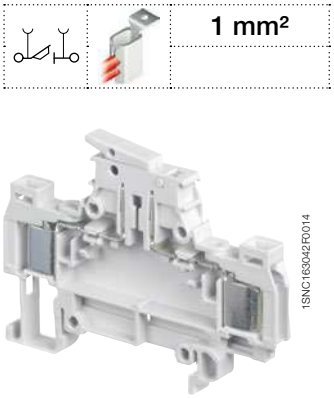

1SNC163042R014

D1/5.SNT2.ADO

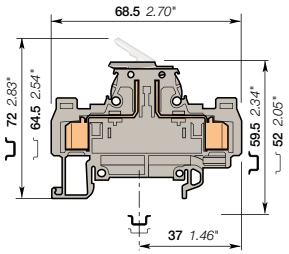

5 mm 0.197 in spacing

Description

- Ease your disconnect operations with the disconnect knife blade operated by hand,
- With the TE Connectivity ADO System®, experience the fastest and most reliable connection on the market,
- Designed for control applications exposed to severe constrains (vibrations, shocks, corrosion etc.),
- Up to 2 wires per connection.

Ordering details

Description		Color	Type	Part Number		Pkg pce	Weight (1 pce) g
Disconnect	With 2 test sockets DIA 2 mm 0.079 in	Grey	D1/5.SNT2.ADO	1SNA399231R0700		50	9.00

Main technical data

		IEC	UL	CSA
ADO	Rigid: Solid/Stranded	0.2-1 mm²		
	Flexible without ferrule	0.22-1 mm²		
Screw clamp	Rigid: Solid/Stranded			
	Flexible without ferrule			
	Flexible with insulated ferrule			
	Gauge			
Rated current / Rated cross section		10 A / 1 mm²		
Rated short-time withstand current (1s)		120 A		
Rated voltage		320 V		
Impulse withstand voltage		4000 V		
Protection		IP20	NEMA 1	

The connecting capacity data for one Rigid: Solid/Stranded, or one Flexible conductor (when applicable) is a mandatory information required by IEC, UL and CSA standards (Copper conductors). All other data are provided as supplementary information only. For more details, please consult our CB, UL or CSA certificates and technical datasheet available on http://www.TE.com

RoHS RoHS | Gost R

Mounting instructions

Rail	TH 35-7.5, TH 35-15
Wire stripping length	
Tool	
Torque	

Accessories

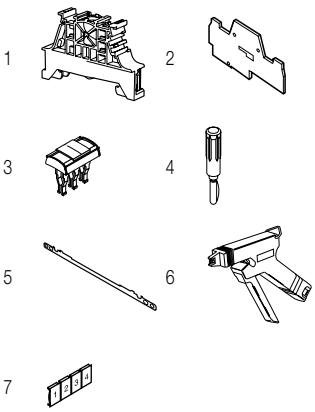

	Description			Color	Type	Part Number		Pkg pce	Weight (1 pce) g
1	**End stops**	10 mm	0.394 in	Dark grey	BAM4	1SNK900001R0000		50	14.00
		5.2 mm	0.205 in		BAZ1	1SNK900002R0000		50	5.30
2	**End sections**	2 mm	0.079 in	Grey	FEDAD5	1SNA199354R0200		20	2.70
3	**Jumper bars**	2 poles	13.5 A	Orange	BJADO5-2	1SNA205955R0300		20	1.00
		3 poles			BJADO5-3	1SNA205956R0400		20	1.00
		10 poles			BJADO5-10	1SNA205963R0300		10	5.00
4	**Test plugs**	DIA 2 mm 0.079 in		Black	FC2	1SNA007865R2600		100	
5	**Shield connectors**				CDB2	1SNA179635R0700		50	
6	**Tools**	Semi automatic tool			OUPAD	1SNA178944R0400		1	205.00
		Hand tool			OUMAD	1SNA179466R0600		1	29.00
7	**Terminal block markers**	Blank card		White	RC510	1SNA231000R0700		1	5.20

Complete list of accessories is indicated in the terminal block datasheet.
Some accessories such as jumper bars may modify the terminal block's ratings: complete information in the accessories catalogue pages.

Technical data valid for copper conductors only.

1SNC163052S0201 - Rev. A

D1.5/6.SNT2.ADO IDC terminal blocks

Disconnect with blade - with test socket ADO-ADO - 6 mm 0.236 in spacing

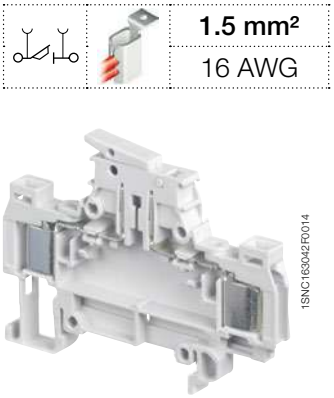

1.5 mm²
16 AWG

1SNC163042R0014

D1.5/6.SNT2.ADO

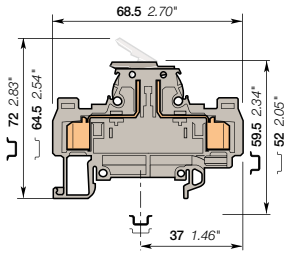

6 mm 0.236 in spacing

Description

- Ease your disconnect operations with the disconnect knife blade operated by hand,
- With the TE Connectivity ADO System®, experience the fastest and most reliable connection on the market,
- Designed for control applications exposed to severe constrains (vibrations, shocks, corrosion etc.),
- Up to 2 wires per connection.

Ordering details

Description		Color	Type	Part Number		Pkg pce	Weight (1 pce) g
Disconnect	With 2 test sockets DIA 2 mm 0.079 in	Grey	D1.5/6.SNT2.ADO	1SNA199144R2000		50	9.00

Main technical data

		IEC	UL	CSA
ADO	Rigid: Solid/Stranded	0.34-1.5 mm²	22-14 AWG	22-16 AWG
	Flexible without ferrule	0.34-1.5 mm²		
Screw clamp	Rigid: Solid/Stranded			
	Flexible without ferrule			
	Flexible with insulated ferrule			
	Gauge			
Rated current / Rated cross section		10 A / 1.5 mm²	8 A / 14 AWG	15 A / 16 AWG
Rated short-time withstand current (1s)		180 A		
Rated voltage		500 V	600 V	600 V
Impulse withstand voltage		6000 V		
Protection		IP20	NEMA 1	

Mounting instructions

Rail		TH 35-7.5, TH 35-15
Wire stripping length		
Tool		
Torque		

The connecting capacity data for one Rigid: Solid/Stranded, or one Flexible conductor (when applicable) is a mandatory information required by IEC, UL and CSA standards (Copper conductors). All other data are provided as supplementary information only. For more details, please consult our CB, UL or CSA certificates and technical datasheet available on http://www.TE.com

RoHS RoHS | USR | cCSAus | Gost R

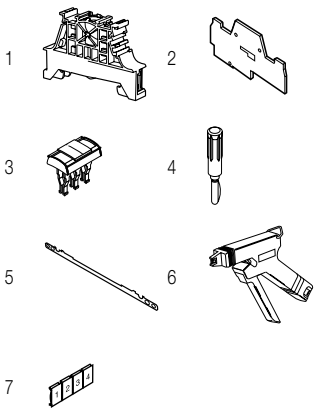

Accessories

	Description			Color	Type	Part Number		Pkg pce	Weight (1 pce) g
1	**End stops**	10 mm	0.394 in	Dark grey	BAM4	1SNK900001R0000		50	14.00
		5.2 mm	0.205 in		BAZ1	1SNK900002R0000		50	5.30
2	**End sections**	2 mm	0.079 in	Grey	FEDAD5	1SNA199354R0200		20	2.70
3	**Jumper bars**	2 poles	17.5 A	Orange	BJADO6-2	1SNA205974R0600		20	1.00
		3 poles			BJADO6-3	1SNA205975R0700		20	1.00
		10 poles			BJADO6-10	1SNA205982R2700		10	6.00
4	**Test plugs**	DIA 2 mm 0.079 in		Black	FC2	1SNA007865R2600		100	
5	**Shield connectors**				CDB2	1SNA179635R0700		50	
6	**Tools**	Semi automatic tool			OUPAD	1SNA178944R0400		1	205.00
		Hand tool			OUMAD	1SNA179466R0600		1	29.00
7	**Terminal block markers**	Blank card		White	RC610	1SNA233000R0100		1	7.50

Complete list of accessories is indicated in the terminal block datasheet.
Some accessories such as jumper bars may modify the terminal block's ratings: complete information in the accessories catalogue pages.

Technical data valid for copper conductors only.

1SNC163053S0201 - Rev. A

D2.5/8.SNT2.ADO IDC terminal blocks

Disconnect with blade - with test socket ADO-ADO 8 mm 0.315 in spacing

2.5 mm²
14 AWG

D2.5/8.SNT2.ADO

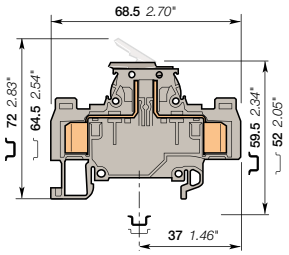

8 mm 0.315 in spacing

Description

- Ease your disconnect operations with the disconnect knife blade operated by hand,
- With the TE Connectivity ADO System®, experience the fastest and most reliable connection on the market,
- Designed for control applications exposed to severe constrains (vibrations, shocks, corrosion etc.),
- Up to 2 wires per connection.

Ordering details

Description		Color	Type	Part Number		Pkg pce	Weight (1 pce) g
Disconnect	With 2 test sockets DIA 2 mm 0.079 in With black marking for wire size 1-2.5 mm² (16-14 AWG)	Grey	D2.5/8.SNT2.ADO	1SNA199231R2700		50	12.00

Main technical data

		IEC	UL	CSA
ADO	Rigid: Solid/Stranded	1-2.5 mm²	16-14 AWG	16-14 AWG
	Flexible without ferrule	1-2.5 mm²		
Screw clamp	Rigid: Solid/Stranded			
	Flexible without ferrule			
	Flexible with insulated ferrule			
	Gauge			
Rated current / Rated cross section		15 A / 2.5 mm²	15 A / 14 AWG	15 A / 14 AWG
Rated short-time withstand current (1s)		300 A		
Rated voltage		500 V	600 V	600 V
Impulse withstand voltage		6000 V		
Protection		IP20	NEMA 1	

Mounting instructions

Rail	TH 35-7.5, TH 35-15
Wire stripping length	
Tool	
Torque	

The connecting capacity data for one Rigid: Solid/Stranded, or one Flexible conductor (when applicable) is a mandatory information required by IEC, UL and CSA standards (Copper conductors). All other data are provided as supplementary information only. For more details, please consult our CB, UL or CSA certificates and technical datasheet available on http://www.TE.com

RoHS USR cCSAus Gost R

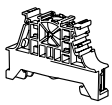

1 2 3 4 5

Accessories

	Description			Color	Type	Part Number		Pkg pce	Weight (1 pce) g
1	**End stops**	10 mm	0.394 in	Dark grey	BAM4	1SNK900001R0000		50	14.00
		5.2 mm	0.205 in		BAZ1	1SNK900002R0000		50	5.30
2	**End sections**	2 mm	0.079 in	Grey	FEDAD5	1SNA199354R0200		20	2.70
3	**Test plugs**	DIA 2 mm 0.079 in		Black	FC2	1SNA007865R2600		100	
4	**Tools**	Semi automatic tool			OUPAD	1SNA178944R0400		1	205.00
		Hand tool			OUMAD	1SNA179466R0600		1	29.00
5	**Terminal block markers**	Blank card		White	RC810	1SNA234000R0200		1	8.20

Complete list of accessories is indicated in the terminal block datasheet.
Some accessories such as jumper bars may modify the terminal block's ratings: complete information in the accessories catalogue pages.

Technical data valid for copper conductors only.

1SNC163054S0201 - Rev. A

D1.5/8.SF.ADO IDC terminal blocks

For 5 x 20 and 5 x 25 fuses - with test socket ADO-ADO - 8 mm 0.315 in spacing

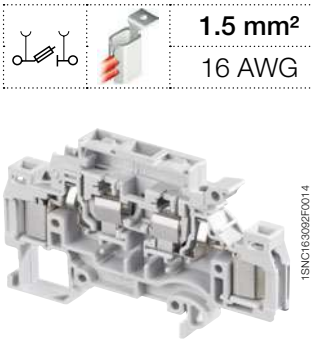

D1.5/8.SF.ADO

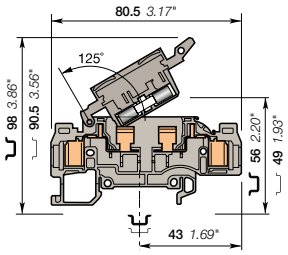

8 mm 0.315 in spacing

	1.5 mm²
	16 AWG

Description

- The TE Connectivity ADO System® fuse holders provide circuit protection for control applications,
- With the TE Connectivity ADO System®, experience the fastest and most reliable connection on the market,
- Designed for control applications exposed to severe constrains (vibrations, shocks, corrosion etc.),
- Up to 2 wires per connection.

Ordering details

Description		Color	Type	Part Number		Pkg pce	Weight (1 pce) g
Fuse	With 2 test sockets DIA 2 mm 0.079 in or DIA 2.3 mm 0.091 in	Grey	D1.5/8.SFT.ADO	1SNA199208R1100		50	13.00

Main technical data

		IEC	UL	CSA
ADO	Rigid: Solid/Stranded	0.34-1.5 mm²	22-16 AWG	22-16 AWG
	Flexible without ferrule	0.34-1.5 mm²		
Screw clamp	Rigid: Solid/Stranded			
	Flexible without ferrule			
	Flexible with insulated ferrule			
	Gauge			
Rated current / Rated cross section		6.3 A / 1.5 mm²	8 A / 16 AWG	10 A / 16 AWG
Rated short-time withstand current (1s)		180 A		
Rated voltage		630 V	600 V	600 V
Impulse withstand voltage		8000 V		
Protection		IP20	NEMA 1	

Mounting instructions

Rail	TH 35-7.5, TH 35-15
Wire stripping length	
Tool	
Torque	

The connecting capacity data for one Rigid: Solid/Stranded, or one Flexible conductor (when applicable) is a mandatory information required by IEC, UL and CSA standards (Copper conductors). All other data are provided as supplementary information only. For more details, please consult our CB, UL or CSA certificates and technical datasheet available on http://www.TE.com

RoHS USR cCSAus Gost R

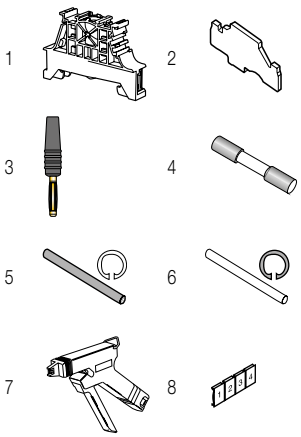

Accessories

	Description			Color	Type	Part Number		Pkg pce	Weight (1 pce) g
1	**End stops**	10 mm	0.394 in	Dark grey	BAM4	1SNK900001R0000		50	14.00
		5.2 mm	0.205 in		BAZ1	1SNK900002R0000		50	5.30
2	**End sections**	1.5 mm	0.059 in	Grey	FEDAD7	1SNA199382R2700		20	3.80
3	**Test plugs**	DIA 2 mm 0.079 in		Black	FC2.MC	1SNA107239R0300		20	1.00
4	**Fuses**	0.5 A			FU520	1SNA008288R1500		10	
		1 A				1SNA008290R1300		10	
		2 A				1SNA008291R0000		10	
		3.15 A				1SNA008289R1600		10	
		5 A				1SNA008292R0100		10	
5	**Assembly rods**	2 poles			TGA8	1SNA168672R1100		10	1.00
		3 poles				1SNA168673R1200		10	
		4 poles				1SNA168674R1300		10	
6	**Spring retaining rings**				ANT	1SNA168675R1400		10	
7	**Tools**	Semi automatic tool			OUPAD	1SNA178944R0400		1	205.00
		Hand tool			OUMAD	1SNA179466R0600		1	29.00
8	**Terminal block markers**	Blank card		White	RC810	1SNA234000R0200		1	8.20

Complete list of accessories is indicated in the terminal block datasheet.
Some accessories such as jumper bars may modify the terminal block's ratings: complete information in the accessories catalogue pages.

Technical data valid for copper conductors only.

1SNC163056S0201 - Rev. A

D1.5/8.SF.ADO IDC terminal blocks

For 5 x 20 and 5 x 25 fuses - with blown fuse indicator and test socket ADO-ADO - 8 mm 0.315 in spacing

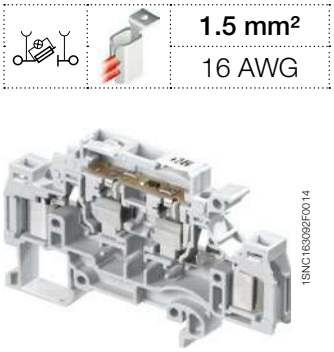

1.5 mm²
16 AWG

1SNC163092F0014

D1.5/8.SF.ADO

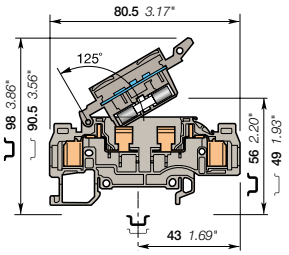

8 mm 0.315 in spacing

Description

- The TE Connectivity ADO System® fuse holders provide circuit protection for control applications,
- Quickly identify the defective circuit thanks to blown fuse indicators,
- With the TE Connectivity ADO System®, experience the fastest and most reliable connection on the market,
- Designed for control applications exposed to severe constrains (vibrations, shocks, corrosion etc.),
- Up to 2 wires per connection.

Ordering details

Description		Color	Type	Part Number		Pkg pce	Weight (1 pce) g
Fuse	With blown fuse indicator by neon 110 - 230 V AC and 2 test sockets	Grey	D1.5/8.SFLT.ADO	1SNA199211R2300		50	14.00
	With blown fuse indicator by LED 24 V AC/DC and 2 test sockets	Grey	D1.5/8.SFDT.ADO	1SNA199212R2400		50	14.00

Main technical data

		IEC	UL	CSA
ADO	Rigid: Solid/Stranded	0.34-1.5 mm²	22-16 AWG	22-16 AWG
	Flexible without ferrule	0.34-1.5 mm²		
Screw clamp	Rigid: Solid/Stranded			
	Flexible without ferrule			
	Flexible with insulated ferrule			
	Gauge			
Rated current / Rated cross section		6.3 A / 1.5 mm²	8 A / 16 AWG	10 A / 16 AWG
Rated short-time withstand current (1s)		180 A		
Rated voltage		500 V	600 V	600 V
Impulse withstand voltage		6000 V		
Protection		IP20	NEMA 1	

Mounting instructions

Rail	TH 35-7.5, TH 35-15
Wire stripping length	
Tool	
Torque	

The connecting capacity data for one Rigid: Solid/Stranded, or one Flexible conductor (when applicable) is a mandatory information required by IEC, UL and CSA standards (Copper conductors). All other data are provided as supplementary information only. For more details, please consult our CB, UL or CSA certificates and technical datasheet available on http://www.TE.com

RoHS RoHS · USR · cCSAus · Gost R

Leakage current: 24 V : < 4.5 mA / 110 V : < 0.5 mA / 230 V : < 0.7 mA

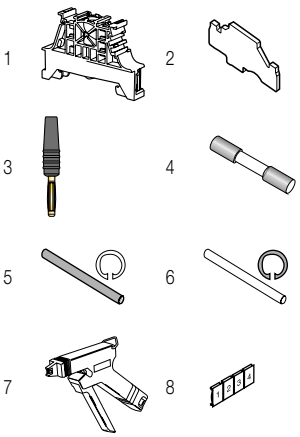

Accessories

	Description			Color	Type	Part Number		Pkg pce	Weight (1 pce) g
1	**End stops**	10 mm	0.394 in	Dark grey	BAM4	1SNK900001R0000		50	14.00
		5.2 mm	0.205 in		BAZ1	1SNK900002R0000		50	5.30
2	**End sections**	1.5 mm	0.059 in	Grey	FEDAD7	1SNA199382R2700		20	3.80
3	**Test plugs**	DIA 2 mm	0.079 in	Black	FC2.MC	1SNA107239R0300		20	1.00
4	**Fuses**	0.5 A			FU520	1SNA008288R1500		10	
		1 A				1SNA008290R1300		10	
		2 A				1SNA008291R0000		10	
		3.15 A				1SNA008289R1600		10	
		5 A				1SNA008292R0100		10	
5	**Assembly rods**	2 poles			TGA8	1SNA168672R1100		10	1.00
		3 poles				1SNA168673R1200		10	
		4 poles				1SNA168674R1300		10	
6	**Spring retaining rings**				ANT	1SNA168675R1400		10	
7	**Tools**	Semi automatic tool			OUPAD	1SNA178944R0400		1	205.00
		Hand tool			OUMAD	1SNA179466R0600		1	29.00
8	**Terminal block markers**	Blank card		White	RC810	1SNA234000R0200		1	8.20

Complete list of accessories is indicated in the terminal block datasheet.
Some accessories such as jumper bars may modify the terminal block's ratings: complete information in the accessories catalogue pages.

Technical data valid for copper conductors only.

1SNC163057S0201 - Rev. B

D2.5/8.SF.ADO2 IDC terminal blocks

For 5 x 20 and 5 x 25 fuses - with test socket ADO-ADO - 8 mm 0.315 in spacing

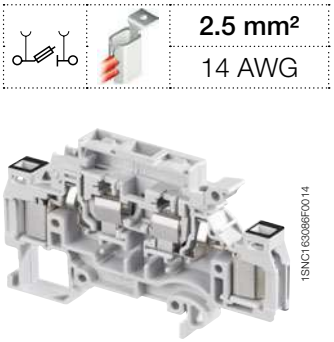

D2.5/8.SF.ADO2

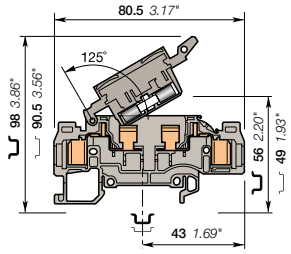

8 mm 0.315 in spacing

2.5 mm²
14 AWG

Description

- The TE Connectivity ADO System® fuse holders provide circuit protection for control applications,
- With the TE Connectivity ADO System®, experience the fastest and most reliable connection on the market,
- Designed for control applications exposed to severe constrains (vibrations, shocks, corrosion etc.),
- Up to 2 wires per connection.

Ordering details

Description		Color	Type	Part Number		Pkg pce	Weight (1 pce) g
Fuse	With 2 test sockets DIA 2 mm 0.079 in or DIA 2.3 mm 0.091 in and black marking for wire size 1-2.5 mm² (16-14 AWG)	Grey	D2.5/8.SFT.ADO2	1SNA199184R1100		50	14.00

Main technical data

		IEC	UL	CSA
ADO	Rigid: Solid/Stranded	1-2.5 mm²	16-14 AWG	16-14 AWG
	Flexible without ferrule	1-2.5 mm²		
Screw clamp	Rigid: Solid/Stranded			
	Flexible without ferrule			
	Flexible with insulated ferrule			
	Gauge			
Rated current / Rated cross section		6.3 A / 2.5 mm²	10 A / 14 AWG	10 A / 14 AWG
Rated short-time withstand current (1s)		300 A		
Rated voltage		630 V	600 V	600 V
Impulse withstand voltage		8000 V		
Protection		IP20	NEMA 1	

Mounting instructions

Rail		TH 35-7.5, TH 35-15
Wire stripping length		
Tool		
Torque		

The connecting capacity data for one Rigid: Solid/Stranded, or one Flexible conductor (when applicable) is a mandatory information required by IEC, UL and CSA standards (Copper conductors). All other data are provided as supplementary information only. For more details, please consult our CB, UL or CSA certificates and technical datasheet available on http://www.TE.com

RoHS RoHS · USR · cCSAus · Gost R

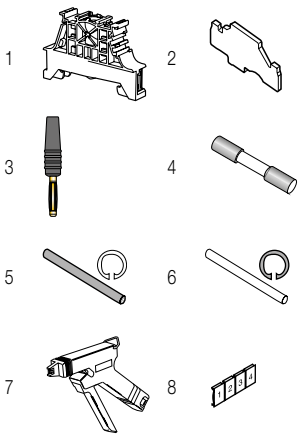

Accessories

	Description			Color	Type	Part Number		Pkg pce	Weight (1 pce) g
1	**End stops**	10 mm	0.394 in	Dark grey	BAM4	1SNK900001R0000		50	14.00
		5.2 mm	0.205 in		BAZ1	1SNK900002R0000		50	5.30
2	**End sections**	1.5 mm	0.059 in	Grey	FEDAD7	1SNA199382R2700		20	3.80
3	**Test plugs**	DIA 2 mm	0.079 in	Black	FC2.MC	1SNA107239R0300		20	1.00
4	**Fuses**	0.5 A			FU520	1SNA008288R1500		10	
		1 A				1SNA008290R1300		10	
		2 A				1SNA008291R0000		10	
		3.15 A				1SNA008289R1600		10	
		5 A				1SNA008292R0100		10	
5	**Assembly rods**	2 poles			TGA8	1SNA168672R1100		10	1.00
		3 poles				1SNA168673R1200		10	
		4 poles				1SNA168674R1300		10	
6	**Spring retaining rings**				ANT	1SNA168675R1400		10	
7	**Tools**	Semi automatic tool			OUPAD	1SNA178944R0400		1	205.00
		Hand tool			OUMAD	1SNA179466R0600		1	29.00
8	**Terminal block markers**	Blank card		White	RC810	1SNA234000R0200		1	8.20

Complete list of accessories is indicated in the terminal block datasheet.
Some accessories such as jumper bars may modify the terminal block's ratings: complete information in the accessories catalogue pages.

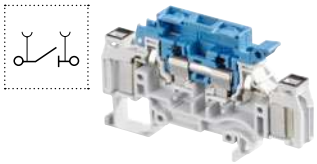

Disconnect IDC terminal blocks

Description		Color	Type	Part Number		Pkg pce	Weight (1 pce) g
Disconnect	Profile aligned with D2.5/8.SF.ADO	Grey, blue	D2.5/8.SNNT.ADO2	1SNA199186R1300		50	18.00

Technical data valid for copper conductors only.

1SNC163058S0201 - Rev. A

D2.5/8.SF.ADO2 IDC terminal blocks

For 5 x 20 and 5 x 25 fuses - with blown fuse indicator and test socket ADO-ADO - 8 mm 0.315 in spacing

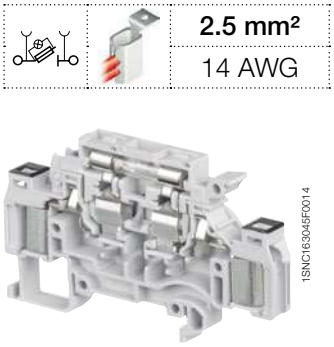

D2.5/8.SF.ADO2

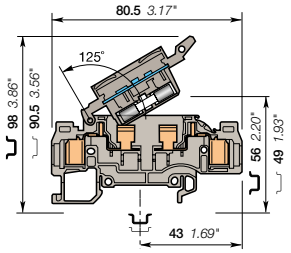

8 mm 0.315 in spacing

Description

- The TE Connectivity ADO System® fuse holders provide circuit protection for control applications,
- Quickly identify the defective circuit thanks to blown fuse indicators,
- With the TE Connectivity ADO System®, experience the fastest and most reliable connection on the market,
- Designed for control applications exposed to severe constrains (vibrations, shocks, corrosion etc.),
- Up to 2 wires per connection.

Ordering details

Description		Color	Type	Part Number		Pkg pce	Weight (1 pce) g
Fuse	With blown fuse indicator by neon 110 - 230 V AC and 2 test sockets and black marking for wire size 1-2.5 mm² (16-14 AWG)	Grey	D2.5/8.SFLT.ADO2	1SNA199187R1400		50	15.00
	With blown fuse indicator by LED 24 V AC/DC and 2 test sockets and black marking for wire size 1-2.5 mm² (16-14 AWG)	Grey	D2.5/8.SFDT.ADO2	1SNA199188R2500		50	15.00

Main technical data

		IEC	UL	CSA
ADO	Rigid: Solid/Stranded	1-2.5 mm²	16-14 AWG	16-14 AWG
	Flexible without ferrule	1-2.5 mm²		
Screw clamp	Rigid: Solid/Stranded			
	Flexible without ferrule			
	Flexible with insulated ferrule			
	Gauge			
Rated current / Rated cross section		6.3 A / 2.5 mm²	10 A / 14 AWG	10 A / 14 AWG
Rated short-time withstand current (1s)		300 A		
Rated voltage		500 V	600 V	600 V
Impulse withstand voltage		6000 V		
Protection		IP20	NEMA 1	

Mounting instructions

Rail	TH 35-7.5, TH 35-15
Wire stripping length	
Tool	
Torque	

The connecting capacity data for one Rigid: Solid/Stranded, or one Flexible conductor (when applicable) is a mandatory information required by IEC, UL and CSA standards (Copper conductors). All other data are provided as supplementary information only. For more details, please consult our CB, UL or CSA certificates and technical datasheet available on http://www.TE.com

RoHS / USR / cCSAus / Gost R

Leakage current: 24 V : < 4.5 mA / 110 V : < 0.5 mA / 230 V : < 0.7 mA

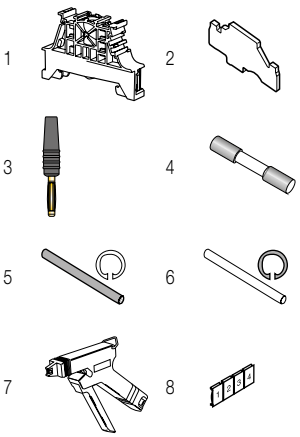

Accessories

	Description			Color	Type	Part Number		Pkg pce	Weight (1 pce) g
1	**End stops**	10 mm	0.394 in	Dark grey	BAM4	1SNK900001R0000		50	14.00
		5.2 mm	0.205 in		BAZ1	1SNK900002R0000		50	5.30
2	**End sections**	1.5 mm	0.059 in	Grey	FEDAD7	1SNA199382R2700		20	3.80
3	**Test plugs**	DIA 2 mm	0.079 in	Black	FC2.MC	1SNA107239R0300		20	1.00
4	**Fuses**	0.5 A			FU520	1SNA008288R1500		10	
		1 A				1SNA008290R1300		10	
		2 A				1SNA008291R0000		10	
		3.15 A				1SNA008289R1600		10	
		5 A				1SNA008292R0100		10	
5	**Assembly rods**	2 poles			TGA8	1SNA168672R1100		10	1.00
		3 poles				1SNA168673R1200		10	
		4 poles				1SNA168674R1300		10	
6	**Spring retaining rings**				ANT	1SNA168675R1400		10	
7	**Tools**	Semi automatic tool			OUPAD	1SNA178944R0400		1	205.00
		Hand tool			OUMAD	1SNA179466R0600		1	29.00
8	**Terminal block markers**	Blank card		White	RC810	1SNA234000R0200		1	8.20

Complete list of accessories is indicated in the terminal block datasheet.
Some accessories such as jumper bars may modify the terminal block's ratings: complete information in the accessories catalogue pages.

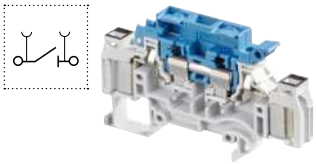

Disconnect IDC terminal blocks

Description		Color	Type	Part Number		Pkg pce	Weight (1 pce) g
Disconnect	Profile aligned with D2.5/8.SF.ADO	Grey, blue	D2.5/8.SNNT.ADO2	1SNA199186R1300		50	18.00

Technical data valid for copper conductors only.

1SNC163059S0201 - Rev. B

D2.5/8.SNNT.ADO2 IDC terminal blocks

Disconnect - with test socket ADO-ADO - 8 mm 0.315 in spacing

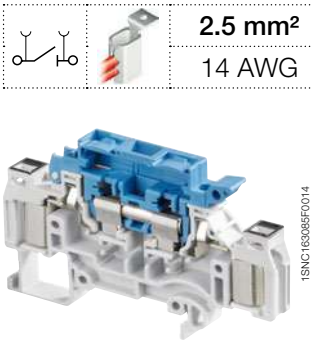

D2.5/8.SNNT.ADO2

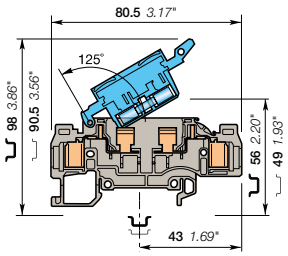

8 mm 0.315 in spacing

2.5 mm²
14 AWG

Description

- Disconnect terminal blocks aligned with fuse holder terminal blocks,
- With the TE Connectivity ADO System®, experience the fastest and most reliable connection on the market,
- Designed for control applications exposed to severe constrains (vibrations, shocks, corrosion etc.),
- Up to 2 wires per connection.

Ordering details

Description		Color	Type	Part Number		Pkg pce	Weight (1 pce) g
Disconnect	With 2 test sockets DIA 2 mm 0.079 in and black marking for wire size 1-2.5 mm² (16-14 AWG)	Grey, blue	D2.5/8.SNNT.ADO2	1SNA199186R1300		50	18.00

Main technical data

		IEC	UL	CSA
ADO	Rigid: Solid/Stranded	1-2.5 mm²	16-14 AWG	
	Flexible without ferrule	1-2.5 mm²		
Screw clamp	Rigid: Solid/Stranded			
	Flexible without ferrule			
	Flexible with insulated ferrule			
	Gauge			
Rated current / Rated cross section		10 A / 2.5 mm²	10 A / 14 AWG	
Rated short-time withstand current (1s)		300 A		
Rated voltage		630 V	600 V	
Impulse withstand voltage		8000 V		
Protection		IP20	NEMA 1	

Mounting instructions

Rail	TH 35-7.5, TH 35-15
Wire stripping length	
Tool	
Torque	

The connecting capacity data for one Rigid: Solid/Stranded, or one Flexible conductor (when applicable) is a mandatory information required by IEC, UL and CSA standards (Copper conductors). All other data are provided as supplementary information only. For more details, please consult our CB, UL or CSA certificates and technical datasheet available on http://www.TE.com

RoHS RoHS · UR USR · Gost R

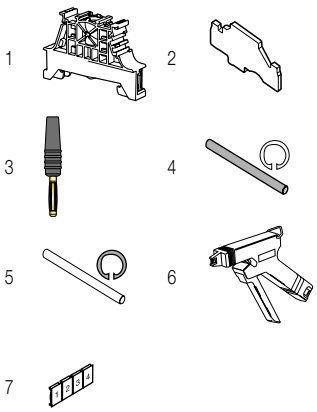

Accessories

	Description			Color	Type	Part Number		Pkg pce	Weight (1 pce) g
1	**End stops**	10 mm	0.394 in	Dark grey	BAM4	1SNK900001R0000		50	14.00
		5.2 mm	0.205 in		BAZ1	1SNK900002R0000		50	5.30
2	**End sections**	1.5 mm	0.059 in	Grey	FEDAD7	1SNA199382R2700		20	3.80
3	**Test plugs**	DIA 2 mm 0.079 in		Black	FC2.MC	1SNA107239R0300		20	1.00
4	**Assembly rods**	2 poles			TGA8	1SNA168672R1100		10	1.00
		3 poles				1SNA168673R1200		10	
		4 poles				1SNA168674R1300		10	
5	**Spring retaining rings**				ANT	1SNA168675R1400		10	
6	**Tools**	Semi automatic tool			OUPAD	1SNA178944R0400		1	205.00
		Hand tool			OUMAD	1SNA179466R0600		1	29.00
7	**Terminal block markers**	Blank card		White	RC810	1SNA234000R0200		1	8.20

Complete list of accessories is indicated in the terminal block datasheet.
Some accessories such as jumper bars may modify the terminal block's ratings: complete information in the accessories catalogue pages.

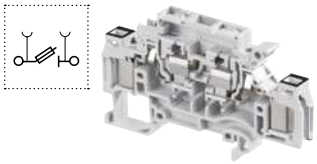

Fuse IDC terminal blocks

Description		Color	Type	Part Number		Pkg pce	Weight (1 pce) g
Fuse	Profile aligned with D2.5/8.SNNT.ADO	Grey	D2.5/8.SFT.ADO2	1SNA199184R1100		50	14.00

Technical data valid for copper conductors only.

1SNC163061S0201 - Rev. A

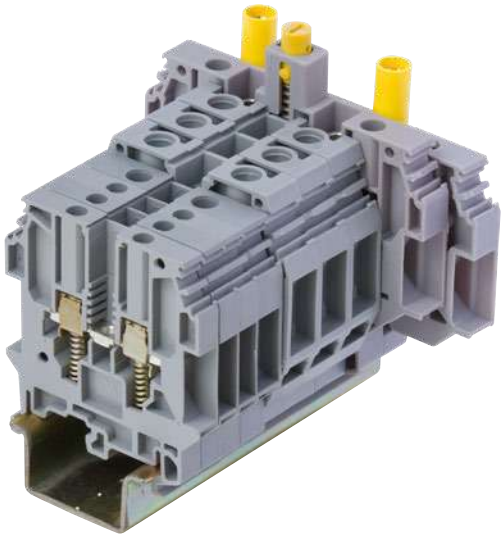

1SNC162115S0201

Dedicated applications terminal blocks
Spring loaded screw clamp technology

Technologies presentation			60
Overview			62
Feed-through			
4 mm² / 12 AWG	**M4/6.RS**		63
6 mm² / 12 AWG	**M6/8.RS**		64
10 mm² / 6 AWG	**M10/10.RS**		65
Disconnect with blade			
4 mm² / 10 AWG	**M4/6.SNTS**		66
Disconnect with push-turn knob			
6 mm² / 12 AWG	**M6/8.STP.RS**	With test	67
Disconnect with screwdriver sliding link			
6 mm² / 12 AWG	**D6/8.ST.RS**		68
	D6/8.ST1.RS.IP20	With insulated test sockets	69

1SNC162115S0201

The safest screw connection!

TE connectivity screw clamp spring loaded technology offers additional contact safety thanks to the combination of a spring under clamp preventing screw loosening and the use of special hook type ferrules providing pull-out proof termination.

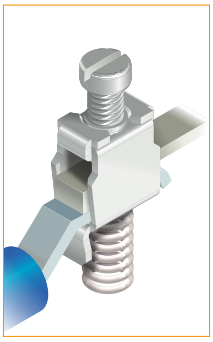

Approved by numerous national electricity providers in EU,Africa and Asia since many years.
Comply with IEC and BS TS5018 standards.

CE RoHS ISO 9001

The ultimate protection against unwanted opened circuits

Safety first!
Connection of up to **two hook type ferrules** onto screw clamp & conducting bar provide "**pull-out proof**" cable terminations.

Circuit continuity ensured
Reinforcement spring beneath the clamp maintains **permanent** contact pressure even if screw clamp is loose ensuring **long term security** of cable connections and electrical circuits.

Robust designed
Springs firmly positioned in **deep recesses** and cannot be easily removed or ejected.

Multiple plastic "ribs" compensate spring pressure and **avoid bending effect on body** leading to a **robust** terminal block body construction.

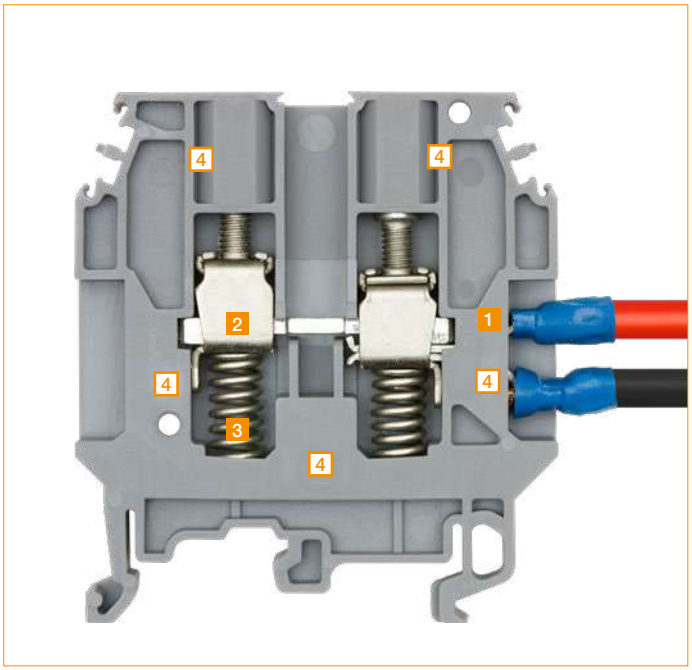

1 Hook type ferrule locked in clamp
2 Permanent contact pressure
3 Deep recesses spring position
4 Multiple reinforcements

1SNC161122S0201

TE connectivity spring loaded screw clamp technology

The safety connection for demanding working conditions

Exclusive design provide robustness and connection safety

The TE connectivity screw clamp spring loaded terminal is designed to guaranty electrical continuity even when screw are loosened unintentionally.
It features all the benefits of our screw clamp with additional vibration,shock resistant and maintenance free performances.

High density wiring

The screw clamp spring loaded terminal can fit up to two conductors equipped with bent ferrules per clamp.

Features

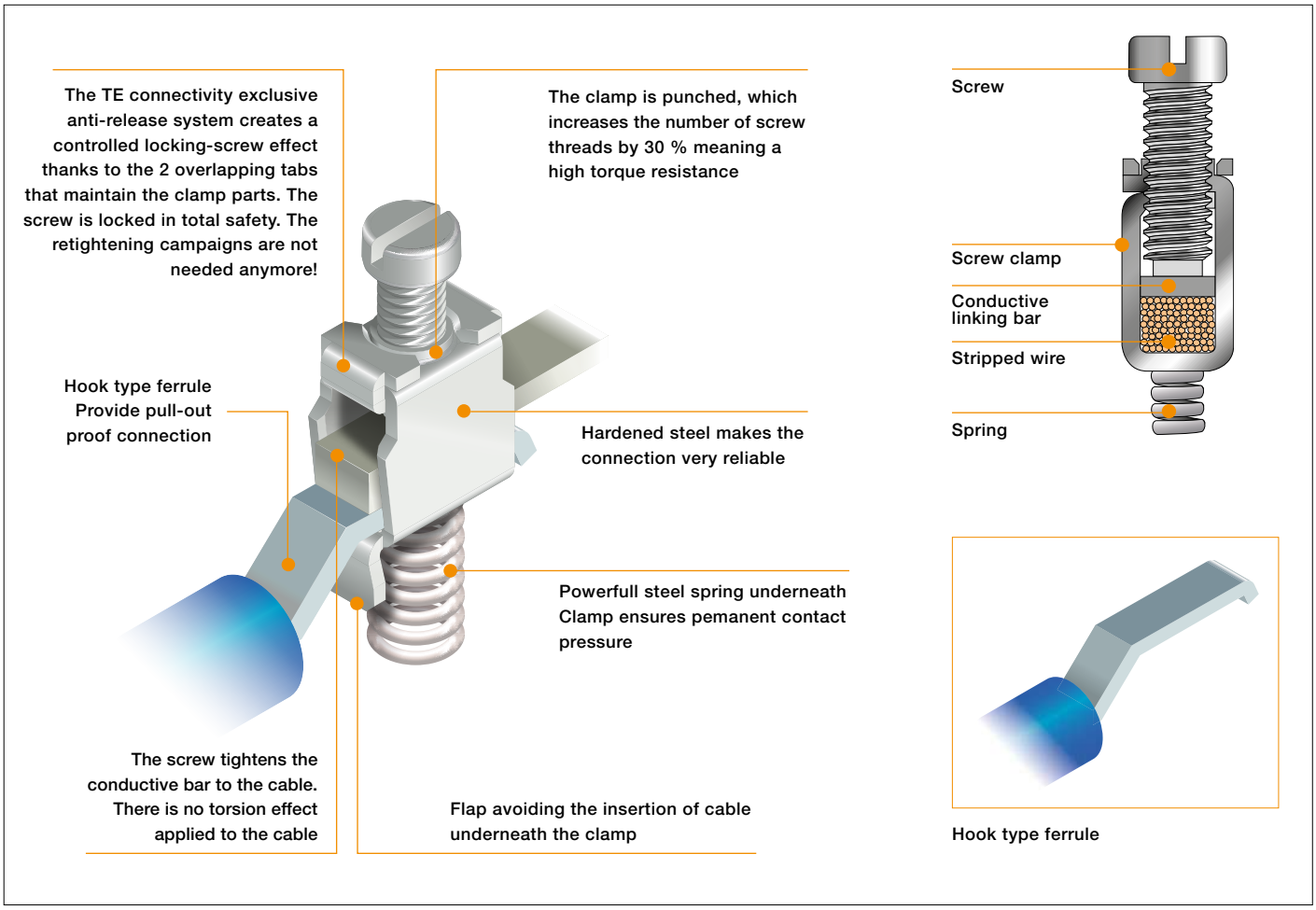

From 0.22 mm² up to 10 mm²

From 24 AWG up to 6 AWG

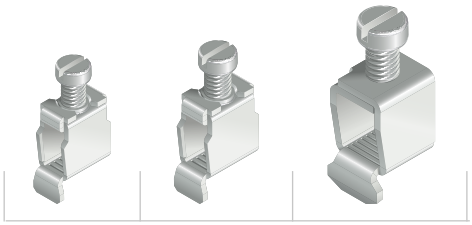

1SNC161123S0201

Section		Feed-through	Disconnect with blade	Disconnect with push-turn knob	Disconnect with screwdriver sliding link
IEC	UL/CSA				
4 mm²	12 AWG	**M4/6.RS** 6 mm 0.236 in	**M4/6.SNTS** 6 mm 0.236 in		
6 mm²	12 AWG	**M6/8.RS** 8 mm 0.315 in		**M6/8.STP.RS** 8 mm 0.315 in	**D6/8.ST.RS** 8 mm 0.315 in
10 mm²	6 AWG	**M10/10.RS** 10 mm 0.394 in			

M4/6.RS spring loaded screw clamp terminal blocks

Feed-through - 6 mm 0.236 in spacing

M4/6.RS

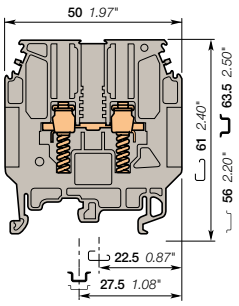

6 mm 0.236 in spacing

4 mm²

Description

- Mainly dedicated to energy applications based on BS TS5018 standard,
- Security: specific shape in linking bar to lock the hook type ferrule, spring clamp can maintain contact pressure even if screw clamp is loose.

Ordering details

Description	Color	Type	Part Number		Pkg pce	Weight (1 pce) g
Feed-through	Grey	M4/6.RS	1SNA115930R1300		50	11.00
	Blue	M4/6.N.RS	1SNA125930R1500		50	11.00

Main technical data

		IEC	BS TS 5018	CSA
1 conductor per clamp	Rigid: Solid/Stranded	0.2-4 mm²		
	Flexible without ferrule	0.22-4 mm²		
	Flexible with insulated ferrule		0.28-1.65 mm²	
	Gauge	A3		
Rated current / Rated cross section		32 A / 4 mm²	25 A	
Rated short-time withstand current (1s)		480 A		
Rated voltage		1000 V	500 V	
Impulse withstand voltage		8000 V		
Protection		IP20	NEMA 1	

Mounting instructions

Rail	G32, TH 35-7.5, TH 35-15
Wire stripping length	13 mm 0.51 in
Tool	Flat screwdriver Ø 4 mm Ø 0.157 in
Torque	0.5 - 0.8 Nm 4.4 - 7.1 lb.in

The connecting capacity data for one Rigid: Solid/Stranded, or one Flexible conductor (when applicable) is a mandatory information required by IEC, UL and CSA standards (Copper conductors). All other data are provided as supplementary information only. For more details, please consult our CB, UL or CSA certificates and technical datasheet available on http://www.TE.com

CE RoHS Gost R

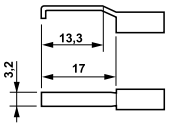

Each screw clamp holds up to 2 hook type ferrules as shown (not supplied)

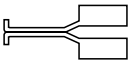

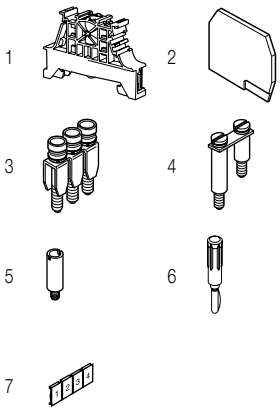

Accessories

	Description			Color	Type	Part Number		Pkg pce	Weight (1 pce) g
1	**End stops**	10 mm	0.394 in	Dark grey	BAM4	1SNK900001R0000		50	14.00
		5.2 mm	0.205 in		BAZ1	1SNK900002R0000		50	5.30
2	**End sections**	2.8 mm	0.110 in	Grey	FEMR8	1SNA116987R0200		10	3.00
3	**Jumper bars**	2 poles	32 A		BJMI6-2	1SNA176663R0000		10	4.40
		3 poles			BJMI6-3	1SNA176664R0100		10	6.70
		4 poles			BJMI6-4	1SNA176665R0200		10	8.90
		5 poles			BJMI6-5	1SNA176666R0300		10	11.20
		10 poles			BJMI6-10	1SNA176667R0400		10	22.40
4	**Cross spacing jumpers**	Universal screw jumper bar kit N°IV			BJDP4	1SNA174781R2500		10	5.00
5	**Test sockets**	DIA 2 mm 0.079 in			AL2	1SNA163043R2100		50	0.90
6	**Test plugs**	DIA 2 mm 0.079 in		Black	FC2	1SNA007865R2600		100	
7	**Terminal block markers**	Blank card		White	RC610	1SNA233000R0100		1	7.50

Complete list of accessories is indicated in the terminal block datasheet.
Some accessories such as jumper bars may modify the terminal block's ratings: complete information in the accessories catalogue pages.
Note: Use of jumper bars or cross spacing jumpers requires the user to cut the partition.

Technical data valid for copper conductors only.

1SNC161056S0201 - Rev. B

M6/8.RS spring loaded screw clamp terminal blocks

Feed-through - 8 mm 0.315 in spacing

6 mm²
12 AWG

M6/8.RS

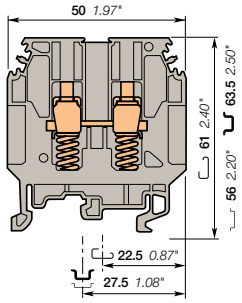

8 mm 0.315 in spacing

Description

- Mainly dedicated to energy applications based on BS TS5018 standard,
- Security: specific shape in linking bar to lock the hook type ferrule, spring clamp can maintain contact pressure even if screw clamp is loose.

Ordering details

Description	Color	Type	Part Number		Pkg pce	Weight (1 pce) g
Feed-through	Grey	M6/8.RS	1SNA115685R1200		50	17.00

Main technical data

		IEC	BS TS 5018	CSA
1 conductor per clamp	Rigid: Solid/Stranded	0.5-10 mm²		20-12 AWG
	Flexible without ferrule	0.5-6 mm²		
	Flexible with insulated ferrule		0.28-2.5 mm²	
	Gauge	A5		
Rated current / Rated cross section		41 A / 6 mm²	25 A	25 A / 12 AWG
Rated short-time withstand current (1s)		720 A		
Rated voltage		800 V	500 V	600 V
Impulse withstand voltage		8000 V		
Protection		IP20	NEMA 1	

Mounting instructions

Rail		G32, TH 35-7.5, TH 35-15
Wire stripping length		13 mm 0.51 in
Tool		Flat screwdriver Ø 4 - 5 mm Ø 0.157 - 0.197 in
Torque		0.8 - 1 Nm 7.1 - 8.9 lb.in

The connecting capacity data for one Rigid: Solid/Stranded, or one Flexible conductor (when applicable) is a mandatory information required by IEC, UL and CSA standards (Copper conductors). All other data are provided as supplementary information only. For more details, please consult our CB, UL or CSA certificates and technical datasheet available on http://www.TE.com

CE RoHS cCSAus Gost R

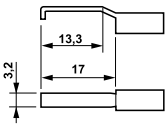

Each screw clamp holds up to 2 hook type ferrules as shown (not supplied)

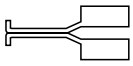

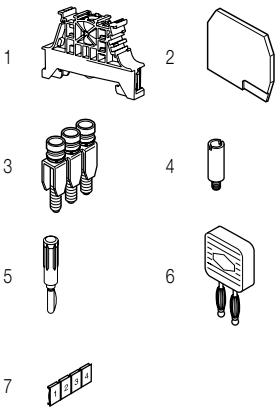

Accessories

	Description			Color	Type	Part Number		Pkg pce	Weight (1 pce) g
1	**End stops**	10 mm	0.394 in	Dark grey	BAM4	1SNK900001R0000		50	14.00
		5.2 mm	0.205 in		BAZ1	1SNK900002R0000		50	5.30
2	**End sections**	2.8 mm	0.110 in	Grey	FEMR8	1SNA116987R0200		10	3.00
3	**Jumper bars**	2 poles	41 A		BJMI8-2	1SNA176669R1600		10	4.50
		3 poles			BJMI8-3	1SNA176670R1300		10	6.00
		4 poles			BJMI8-4	1SNA176671R0000		10	10.00
		5 poles			BJMI8-5	1SNA176672R0100		10	12.22
		10 poles			BJMI8-10	1SNA176673R0200		10	20.00
4	**Test sockets**	DIA 4 mm 0.157 in			AL4-M3-R1	1SNA206722R0200		50	1.62
5	**Test plugs**	DIA 4 mm 0.157 in		White	FC4	1SNA167860R0100		10	10.00
6	**Short circuit plugs**	DIA 4 mm 0.157 in			BP8.A4	1SNA173888R2000		10	
7	**Terminal block markers**	Blank card		White	RC810	1SNA234000R0200		1	8.20

Complete list of accessories is indicated in the terminal block datasheet.
Some accessories such as jumper bars may modify the terminal block's ratings: complete information in the accessories catalogue pages.
Note: Use of jumper bars requires the user to cut the partition.

Technical data valid for copper conductors only.

1SNC161152S0201 - Rev. B

M10/10.RS spring loaded screw clamp terminal blocks

Feed-through - 10 mm 0.394 in spacing

10 mm²	
6 AWG	

M10/10.RS

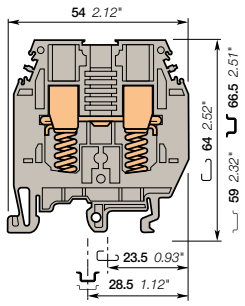

10 mm 0.394 in spacing

Description

- Mainly dedicated to energy applications based on BS TS5018 standard,
- Security: specific shape in linking bar to lock the hook type ferrule, spring clamp can maintain contact pressure even if screw clamp is loose.

Ordering details

Description	Color	Type	Part Number		Pkg pce	Weight (1 pce) g
Feed-through	Grey	M10/10.RS	1SNA115320R2700		25	30.00

Main technical data

		IEC	BS TS 5018	CSA
1 conductor per clamp	Rigid: Solid/Stranded	0.5-16 mm²		20-6 AWG
	Flexible without ferrule	0.5-10 mm²		
	Flexible with insulated ferrule		0.28-6 mm²	
	Gauge	A5		
Rated current / Rated cross section		41 A / 10 mm²	40 A	65 A / 6 AWG
Rated short-time withstand current (1s)		1200 A		
Rated voltage		800 V	500 V	600 V
Impulse withstand voltage		8000 V		
Protection		IP20	NEMA 1	

Mounting instructions

Rail	G32, TH 35-7.5, TH 35-15
Wire stripping length	14 mm 0.55 in
Tool	Flat screwdriver Ø 5.5 - 6 mm Ø 0.217 - 0.236 in
Torque	1.2 - 1.4 Nm 10.6 - 12.3 lb.in

The connecting capacity data for one Rigid: Solid/Stranded, or one Flexible conductor (when applicable) is a mandatory information required by IEC, UL and CSA standards (Copper conductors). All other data are provided as supplementary information only. For more details, please consult our CB, UL or CSA certificates and technical datasheet available on http://www.TE.com

CE | RoHS | cCSAus | Gost R

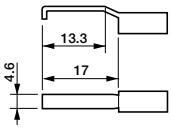

Each screw clamp holds up to 2 hook type ferrules as shown (not supplied)

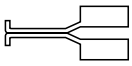

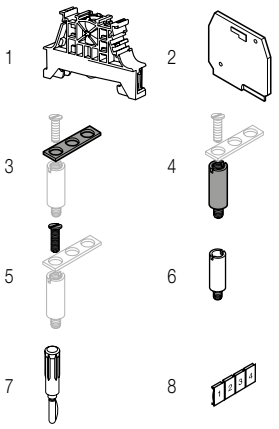

Accessories

	Description			Color	Type	Part Number		Pkg pce	Weight (1 pce) g
1	End stops	10 mm	0.394 in	Dark grey	BAM4	1SNK900001R0000		50	14.00
		5.2 mm	0.205 in		BAZ1	1SNK900002R0000		50	5.30
2	End sections	2.5 mm	0.098 in	Grey	FEMR10	1SNA114434R0500		10	3.30
3	Jumper bars (1)	2 poles	57 A		BJS10	1SNA164585R1700		10	17.00
		3 poles				1SNA164586R1000		10	17.00
		4 poles				1SNA164587R1100		10	17.00
		5 poles				1SNA168273R1100		10	17.00
		10 poles				1SNA164588R2200		10	17.00
		20 poles			BJS10-20	1SNA177654R0000		10	17.00
4	Posts (1)				PT101	1SNA163181R1100		50	1.00
5	Screws (1)				VSJ11	1SNA163394R2600		50	0.60
6	Test sockets	DIA 4 mm	0.157 in		AL4-M4	1SNA206723R0300		50	1.30
7	Test plugs	DIA 4 mm	0.157 in	White	FC4	1SNA167860R0100		10	10.00
8	Terminal block markers	Blank card		White	RC1010	1SNA238000R1600		1	1.30

Complete list of accessories is indicated in the terminal block datasheet.
Some accessories such as jumper bars may modify the terminal block's ratings: complete information in the accessories catalogue pages.
Note: Use of jumper bars requires the user to cut the partition.
(1) Complete jumper : jumper bar + post x number of poles + screw x number of poles.

Technical data valid for copper conductors only.

M4/6.SNTS spring loaded screw clamp terminal blocks

Disconnect with blade - with test socket - 6 mm 0.236 in spacing

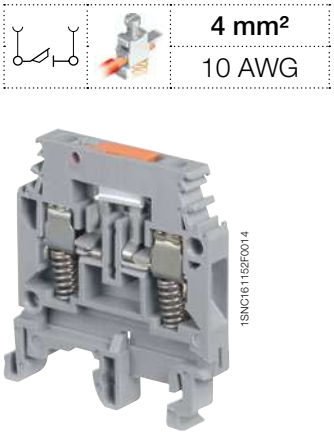

M4/6.SNTS

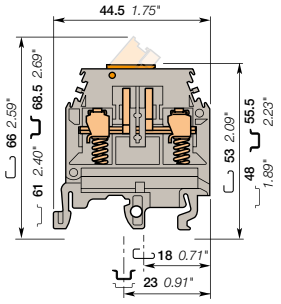

6 mm 0.236 in spacing

4 mm²
10 AWG

Description

- Mainly dedicated to energy markets for security purposes on CT circuits,
- Security: specific shape in linking bar to lock the ferrule, spring clamp can maintain contact pressure even if screw clamp is loose.

Ordering details

Description		Color	Type	Part Number		Pkg pce	Weight (1 pce) g
Disconnect	With test socket DIA 2 mm 0.079 in	Grey	M4/6.SNTS	1SNA115229R2000		50	11.00

Main technical data

		IEC	UL	CSA
1 conductor per clamp	Rigid: Solid/Stranded	0.5-4 mm²	22-10 AWG	24-10 AWG
	Flexible without ferrule	0.5-4 mm²		
	Flexible with insulated ferrule			
	Gauge			
Rated current / Rated cross section		10 A / 4 mm²	10 A / 10 AWG	15 A / 10 AWG
Rated short-time withstand current (1s)		480 A		
Rated voltage		500 V	300 V	600 V
Impulse withstand voltage				
Protection		IP20	NEMA 1	

Mounting instructions

Rail	G32, TH 35-7.5, TH 35-15
Wire stripping length	9.5 mm 0.374 in
Tool	Flat screwdriver Ø 4 mm Ø 0.157 in
Torque	0.5 - 0.6 Nm 4.4 - 5.3 lb.in

The connecting capacity data for one Rigid: Solid/Stranded, or one Flexible conductor (when applicable) is a mandatory information required by IEC, UL and CSA standards (Copper conductors). All other data are provided as supplementary information only. For more details, please consult our CB, UL or CSA certificates and technical datasheet available on http://www.TE.com

CE RoHS USR cCSAus Gost R

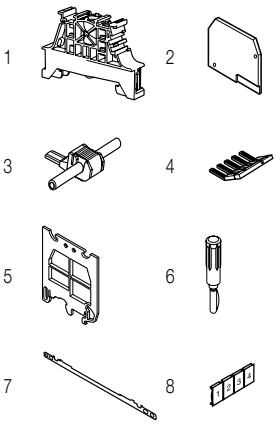

Accessories

	Description			Color	Type	Part Number		Pkg pce	Weight (1 pce) g
1	**End stops**	10 mm	0.394 in	Dark grey	BAM4	1SNK900001R0000		50	14.00
		5.2 mm	0.205 in		BAZ1	1SNK900002R0000		50	5.30
2	**End sections**	2.8 mm	0.110 in	Grey	FEM6	1SNA118368R1600		20	2.40
3	**Jumper bars**	1 poles	24 A	Grey	AD2.5	1SNA114205R2000		50	1.60
4	**Lateral jumper bars**	10 poles	35 A		PC61-10	1SNA163311R2200		10	5.00
5	**Circuit separators**	3 mm	0.118 in	Grey	SCFM6	1SNA114825R0500		20	4.00
					SCF6	1SNA118707R0300		20	
6	**Test plugs**	DIA 2 mm 0.079 in		Black	FC2	1SNA007865R2600		100	
7	**Shield connectors**				CBM5	1SNA178745R1400		50	
8	**Terminal block markers**	Blank card		White	RC610	1SNA233000R0100		1	7.50

Complete list of accessories is indicated in the terminal block datasheet.
Some accessories such as jumper bars may modify the terminal block's ratings: complete information in the accessories catalogue pages.

Technical data valid for copper conductors only.

1SNC161138S0201 - Rev. A

M6/8.STP.RS spring loaded screw clamp terminal blocks

Disconnect with push-turn knob - with test socket- 8 mm 0.315 in spacing

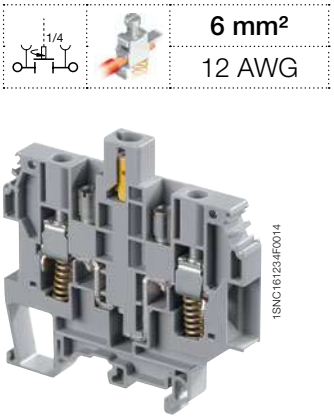

M6/8.STP.RS

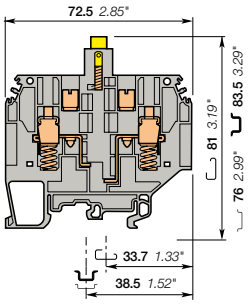

8 mm 0.315 in spacing

1/4	**6 mm²**
	12 AWG

Description

- Mainly dedicated to energy markets for security purposes on CT circuits,
- Security: specific shape in linking bar to lock the ferrule, spring clamp can maintain contact pressure even if screw clamp is loose.

Ordering details

Description		Color	Type	Part Number		Pkg pce	Weight (1 pce) g
Disconnect	With 2 test sockets DIA 4 mm 0.157 in	Grey, yellow	M6/8.STP.RS	1SNA115678R0200		25	29.00

Main technical data

		IEC	BS TS 5018	CSA
1 conductor per clamp	Rigid: Solid/Stranded	0.5-10 mm²		20-12 AWG
	Flexible without ferrule	0.5-6 mm²		
	Flexible with insulated ferrule		0.28-2.5 mm²	
	Gauge	A5		
Rated current / Rated cross section		24 A / 6 mm²	25 A	25 A / 12 AWG
Rated short-time withstand current (1s)		720 A		
Rated voltage		500 V	500 V	600 V
Impulse withstand voltage		6000 V		
Protection			NEMA	

Mounting instructions

Rail	G32, TH 35-7.5, TH 35-15
Wire stripping length	13 mm 0.512 in
Tool	Flat screwdriver Ø 4 - 5 mm Ø 0.157 - 0.197 in
Torque	0.8 - 1 Nm 7.1 - 8.9 lb.in

The connecting capacity data for one Rigid: Solid/Stranded, or one Flexible conductor (when applicable) is a mandatory information required by IEC, UL and CSA standards (Copper conductors). All other data are provided as supplementary information only. For more details, please consult our CB, UL or CSA certificates and technical datasheet available on http://www.TE.com

CE RoHS cCSAus Gost R

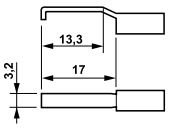

Each screw clamp holds up to 2 hook type ferrules as shown (not supplied)

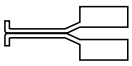

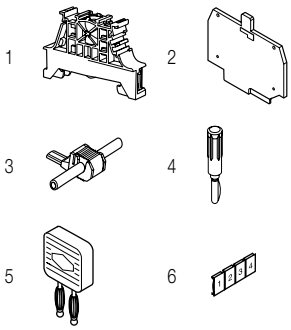

Accessories

	Description			Color	Type	Part Number		Pkg pce	Weight (1 pce) g
1	**End stops**	10 mm	0.394 in	Dark grey	BAM4	1SNK900001R0000		50	14.00
		5.2 mm	0.205 in		BAZ1	1SNK900002R0000		50	5.30
2	**End sections**	2.8 mm	0.110 in	Grey	FEMR8T	1SNA116991R0600		10	4.70
3	**Jumper bars**	1 poles	24 A	Grey	AD2.5	1SNA114205R2000		50	1.60
4	**Test plugs**	DIA 4 mm 0.157 in		White	FC4	1SNA167860R0100		10	10.00
5	**Short circuit plugs**	DIA 4 mm 0.157 in			BP8.A4	1SNA173888R2000		10	
				Red	BNSTP2	1SNA196789R2400		20	10.00
		With test DIA 4 mm 0.16 in		Beige	BNSTP1	1SNA196792R1700		20	14.00
6	**Terminal block markers**	Blank card		White	RC810	1SNA234000R0200		1	8.20

Complete list of accessories is indicated in the terminal block datasheet.
Some accessories such as jumper bars may modify the terminal block's ratings: complete information in the accessories catalogue pages.

Technical data valid for copper conductors only.

1SNC161151S0201 - Rev. A

D6/8.ST.RS spring loaded screw clamp terminal blocks

Test disconnect with a screwdriver sliding link - 8 mm 0.315 in spacing

6 mm²

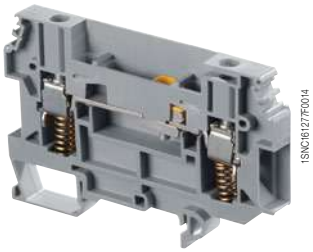

D6/8.ST.RS

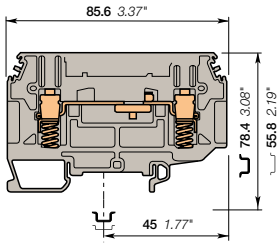

8 mm 0.315 in spacing

Description

- Mainly dedicated to energy markets for security purposes on CT circuits,
- Security: specific shape in linking bar to lock the ferrule, spring clamp can maintain contact pressure even if screw clamp is loose.

Ordering details

Description	Color	Type	Part Number		Pkg pce	Weight (1 pce) g
Disconnect	Grey	D6/8.ST.RS	1SNA115914R0700		32	28.00

Main technical data

		IEC	BS TS 5018	CSA
1 conductor per clamp	Rigid: Solid/Stranded	0.5-10 mm²		
	Flexible without ferrule	0.5-6 mm²		
	Flexible with insulated ferrule		0.28-2.5 mm²	
	Gauge	A5		
Rated current / Rated cross section		24 A / 6 mm²		
Rated short-time withstand current (1s)		720 A		
Rated voltage		400 V		
Impulse withstand voltage		6000 V		
Protection			NEMA	

Mounting instructions

Rail		G32, TH 35-7.5, TH 35-15
Wire stripping length		16 mm 0.51 in
Tool		Flat screwdriver Ø 3.5 mm Ø 0.138 in
Torque		0.8 - 1 Nm 7.1 - 8.9 lb.in

The connecting capacity data for one Rigid: Solid/Stranded, or one Flexible conductor (when applicable) is a mandatory information required by IEC, UL and CSA standards (Copper conductors). All other data are provided as supplementary information only. For more details, please consult our CB, UL or CSA certificates and technical datasheet available on http://www.TE.com

CE RoHS Gost R

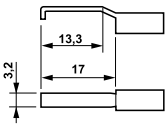

Each screw clamp holds up to 2 hook type ferrules as shown (not supplied)

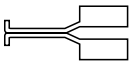

Accessories

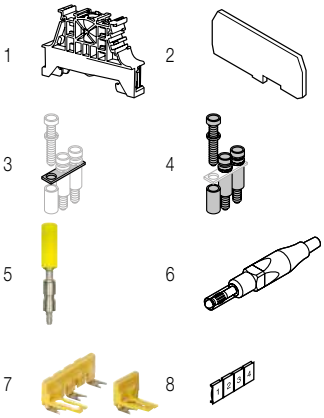

	Description			Color	Type	Part Number		Pkg pce	Weight (1 pce) g
1	**End stops**	End stops	0.394 in	Dark grey	BAM4	1SNK900001R0000		50	14.00
			0.205 in		BAZ1	1SNK900002R0000		50	5.30
2	**End sections**	1 mm	0.039 in	Grey	FEM8T6	1SNA215266R0100		10	4.40
3	**Jumper bars**	2 poles	41 A		BJS8	1SNA164581R1300		10	3.10
		3 poles				1SNA164582R1400		10	3.10
		4 poles				1SNA164583R1500		10	3.10
		20 poles			BJS8-20	1SNA174789R0500		5	3.20
4	**Fastening kits**	Sub assembly post + screw + washer			EV6I	1SNA206394R0200		20	2.00
5	**Test sockets**	DIA 4 mm 0.157 in IP20		Yellow	AJS9	1SNA179726R0200		25	3.60
				Black	AJS9-1	1SNA206680R1500		25	3.60
				Green	AJS9-2	1SNA206681R0200		25	3.60
				Grey	AJS9-3	1SNA206682R0300		25	3.60
				Blue	AJS9-4	1SNA206683R0400		25	3.60
				Red	AJS9-5	1SNA206720R1400		25	3.60
		DIA 4 mm 0.157 in			AL4-M3	1SNA206721R0100		50	1.10
6	**Test plugs**	DIA 4 mm 0.157 in IP20		Red	FC4-1	1SNA167927R1000		10	11.00
7	**Short circuit bridges**	2 poles		Yellow	SC-JB8-2	1SNK900652R0000		25	2.00
		3 poles			SC-JB8-3	1SNK900653R0000		25	3.40
		4 poles			SC-JB8-4	1SNK900654R0000		25	4.70
8	**Terminal block markers**	Blank card		White	RC810	1SNA234000R0200		1	8.20

Complete list of accessories is indicated in the terminal block datasheet.
Some accessories such as jumper bars may modify the terminal block's ratings: complete information in the accessories catalogue pages.

Technical data valid for copper conductors only.

1SNC161153S0201_dupli - Rev. A

D6/8.ST.RS spring loaded screw clamp terminal blocks

Test disconnect with a screwdriver sliding link - 8 mm 0.315 in spacing

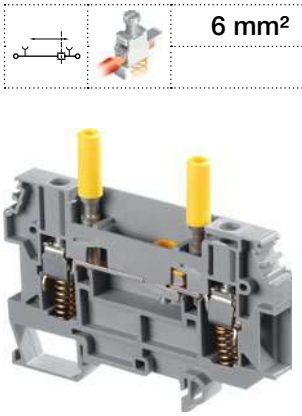

6 mm²

1SNC161233F0014

D6/8.ST.RS

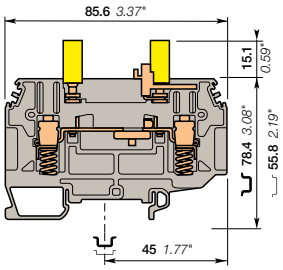

8 mm 0.315 in spacing

Description

- Mainly dedicated to energy markets for security purposes on CT circuits,
- Security: specific shape in linking bar to lock the ferrule, spring clamp can maintain contact pressure even if screw clamp is loose.

Ordering details

Description		Color	Type	Part Number		Pkg pce	Weight (1 pce) g
Disconnect	With 2 yellow test sockets DIA 4 mm 0.157 in	Grey	D6/8.ST1.RS.IP20	1SNA115831R0400		32	38.00

Main technical data

		IEC	BS TS 5018	CSA
1 conductor per clamp	Rigid: Solid/Stranded	0.5-10 mm²		
	Flexible without ferrule	0.5-6 mm²		
	Flexible with insulated ferrule		0.28-2.5 mm²	
	Gauge	A5		
Rated current / Rated cross section		24 A / 6 mm²		
Rated short-time withstand current (1s)		720 A		
Rated voltage		400 V		
Impulse withstand voltage		6000 V		
Protection			NEMA	

Mounting instructions

Rail		G32, TH 35-7.5, TH 35-15
Wire stripping length		16 mm 0.51 in
Screw clamp		Flat screwdriver
Tool		Ø 3.5 mm Ø 0.138 in
Torque		0.8 - 1 Nm 7.1 - 8.9 lb.in
Disconnect device		Flat screwdriver
Tool		Ø 3.5 mm Ø 0.138 in
Torque		0.4 - 0.6 N.m 3.5 - 5.3 lb.in
Test socket		
Tool		Ø 3.5 mm Ø 0.138 in
Torque		0.6 N.m 5.34 lb.in

The connecting capacity data for one Rigid: Solid/Stranded, or one Flexible conductor (when applicable) is a mandatory information required by IEC, UL and CSA standards (Copper conductors). All other data are provided as supplementary information only. For more details, please consult our CB, UL or CSA certificates and technical datasheet available on http://www.TE.com

CE RoHS Gost R

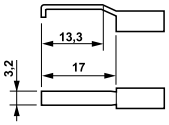

Each screw clamp holds up to 2 hook type ferrules as shown (not supplied)

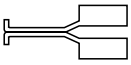

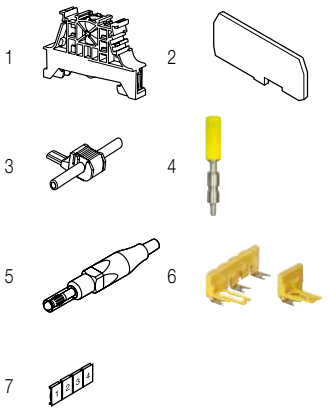

Accessories

	Description			Color	Type	Part Number		Pkg pce	Weight (1 pce) g
1	**End stops**	10 mm	0.394 in	Dark grey	BAM4	1SNK900001R0000		50	14.00
		5.2 mm	0.205 in		BAZ1	1SNK900002R0000		50	5.30
2	**End sections**	1 mm	0.039 in	Grey	FEM8T6	1SNA215266R0100		10	4.40
3	**Jumper bars**	1 poles	24 A	Grey	AD2.5	1SNA114205R2000		50	1.60
4	**Test sockets**	DIA 4 mm 0.157 in IP20		Black	AJS9-1	1SNA206680R1500		25	3.60
				Green	AJS9-2	1SNA206681R0200		25	3.60
				Grey	AJS9-3	1SNA206682R0300		25	3.60
				Blue	AJS9-4	1SNA206683R0400		25	3.60
				Red	AJS9-5	1SNA206720R1400		25	3.60
5	**Test plugs**	DIA 4 mm 0.157 in IP20		Red	FC4-1	1SNA167927R1000		10	11.00
6	**Short circuit bridges**	2 poles		Yellow	SC-JB8-2	1SNK900652R0000		25	2.00
		3 poles			SC-JB8-3	1SNK900653R0000		25	3.40
		4 poles			SC-JB8-4	1SNK900654R0000		25	4.70
7	**Terminal block markers**	Blank card		White	RC810	1SNA234000R0200		1	8.20

Complete list of accessories is indicated in the terminal block datasheet.
Some accessories such as jumper bars may modify the terminal block's ratings: complete information in the accessories catalogue pages.

Technical data valid for copper conductors only.

1SNC161095S0201_dupli - Rev. A

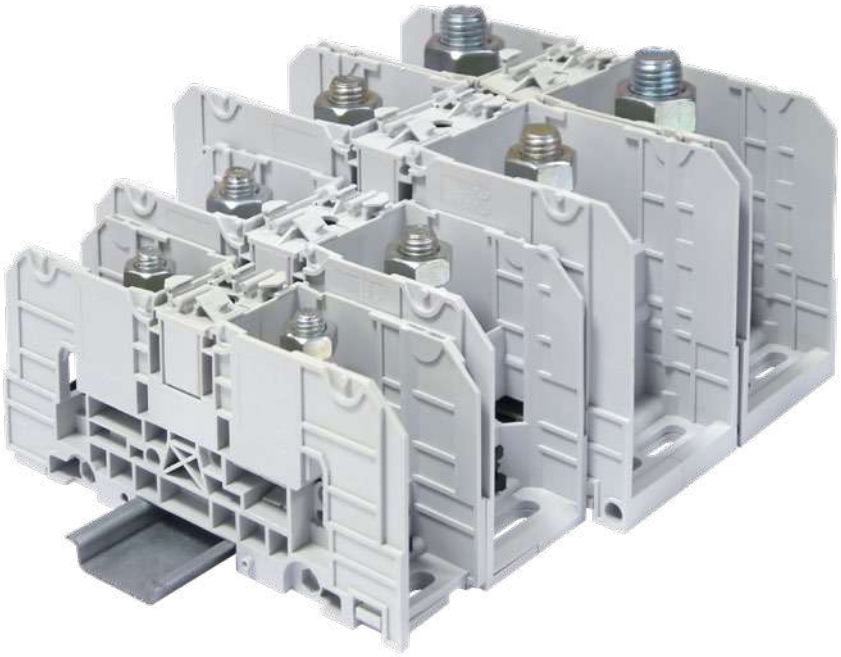

1SNC165030S0201

Dedicated applications terminal blocks
Stud technology

Technologies presentation 72
Overview 73

D… series

Two studs
Feed-through

35 mm² / 1 AWG	**D35/27.FF**	74
70 mm² / 000 AWG	**D70/32.FF**	75
120 mm² / 300 Kcmil	**D120/42.FF**	76
185 mm² / 500 Kcmil	**D185/55.FF**	77
300 mm² / 1000 Kcmil	**D300/55.FF**	78

One stud - One screw clamp
Feed-through

35 mm² / 1 AWG	**D35/27.AF**	79
70 mm² / 000 AWG	**D70/32.AF**	80
120 mm² / 300 AWG	**D120/42.AF**	81
185 mm² / 500 AWG	**D185/55.AF**	82

D… series mounting instructions 83

M… series

Two studs
Feed-through

25 mm² / 2 AWG	**M35/26.FF**	84
50 mm² / 00 AWG	**M70/31.FF**	85
70 mm² / 000 AWG-250 Kcmil	**M120/35.FF**	86
120 mm² / 500 Kcmil	**M300/42.FF**	87

One stud - One screw clamp
Feed-through

25 mm² / 2 AWG	**M35/26.AF**	88
50 mm² / 0 AWG	**M70/31.AF**	89
70 mm² / 000 AWG-250 Kcmil	**M120/35.AF**	90
120 mm² / 500 Kcmil	**M300/42.AF**	91

One stud
Feed-through

25 mm² / 2 AWG	**M35/26.F**	92
50 mm² / 00 AWG	**M70/31.F**	93
70 mm² / 000 AWG-250 Kcmil	**M120/35.F**	94
120 mm² / 500 Kcmil	**M300/42.F**	95

M… series mounting instructions 96

4

1SNC165030S0201

TE Connectivity Stud technology
The connection for power and energy circuits

Reliability first
Stud technology is designed to ensure a reliable connection thanks to the combination of:
- Vibration resistant equipements (nuts, washers),
- Lugs crimped on the cable provide pull-out proof termination.

This technology is very popular on the American market and particularely in the energy applications.

Available configurations

Two studs

One screw clamp / one stud

One stud

Connection technics

Up to 300 mm² / 1000 Kcmil

M4-M5	M6	M8	M10	M12	M16
6 mm²	**35 mm²**	**70 mm²**	**120 mm²**	**185 mm²**	**300 mm²**
8 AWG	1 AWG	000 AWG	300 Kcmil	500 Kcmil	1000 Kcmil

1SNC165028S0201

Two studs

Feed-through

Section

IEC	UL/CSA		
35 mm²	1 AWG	D35/27.FF	27 mm 1.063 in
70 mm²	000 AWG	D70/32.FF	32 mm 1.260 in
120 mm²	300 Kcmil	D120/42.FF	42 mm 1.654 in
185 mm²	500 Kcmil	D185/55.FF	55 mm 2.165 in
300 mm²	1000 Kcmil	D300/55.FF	55 mm 2.165 in

Feed-through

Section

IEC	UL/CSA		
25 mm²	2/4 AWG	M35/26.FF	26 mm 1.024 in
50 mm²	00/0 AWG	M70/31.FF	31 mm 1.220 in
70 mm²	250 Kcmil/000 AWG	M120/35.FF	35 mm 1.380 in
120 mm²	500 Kcmil	M300/42.FF	42 mm 1.653 in

One stud - One Screw-clamp

Feed-through

Section

IEC	UL/CSA		
35 mm²	1 AWG	D35/27.AF	27 mm 1.063 in
70 mm²	000 AWG	D70/32.AF	32 mm 1.260 in
120 mm²	300 Kcmil	D120/42.AF	42 mm 1.654 in
185 mm²	500 Kcmil	D185/55.AF	55 mm 2.165 in

Feed-through

Section

IEC	UL/CSA		
25 mm²	2/4 AWG	M35/26.AF	26 mm 1.024 in
50 mm²	0 AWG	M70/31.AF	31 mm 1.220 in
70 mm²	250 Kcmil/000 AWG	M120/35.AF	35 mm 1.380 in
120 mm²	500 Kcmil	M300/42.AF	42 mm 1.653 in

One stud

Feed-through

Section

IEC	UL/CSA		
25 mm²	2/4 AWG	M35/26.F	26 mm 1.024 in
50 mm²	00/0 AWG	M70/31.F	31 mm 1.220 in
70 mm²	250 Kcmil/000 AWG	M120/35.F	35 mm 1.380 in
120 mm²	500 Kcmil	M300/42.F	42 mm 1.653 in

1SNC165029S0201

D35/27.FF power terminal blocks
Feed-through - 27 mm 1.062 in spacing

35 mm²
1 AWG

D35/27.FF

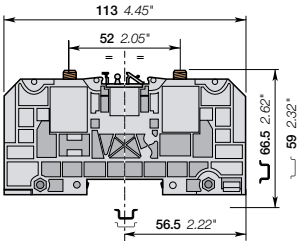

27 mm 1.062 in spacing

Description

- Rated cross section up to 300 mm² / 1000 Kcmil, IP20 protection cover,
- Holding foot on DIN 3 rail with two position for easy mounting, lug mounting in accordance with NF C 20-130 and DIN 46234, various marking options, rail or base mounting.

Ordering details

Description		Color	Type	Part Number		Pkg qty	Weight (1 pce) g
Feed-through	2 studs M6 without cover	Grey	D35/27.FF	1SNA190001R2000		10	130.00

Main technical data

Connecting capacity		NF C	DIN	UL	CSA
Lugs	Rigid: Solid/Stranded	2.5-35 mm²	2.5-50 mm²	1 AWG	
	Flexible with insulated ferrule	2.5-35 mm²	2.5-35 mm²		
	Gauge	C4			

		IEC	UL	CSA
Screw clamp	Rigid: Solid/Stranded			
	Flexible without ferrule			
	Gauge			

	IEC	UL	CSA
Bar			
Rated current	125 A	125 A	
Rated cross section	35 mm²	1 AWG	
Rated voltage	1000 V	600 V	
Impulse withstand voltage	8000 V		

Mounting instructions

Rail		TH 35-7.5, TH 35-15
Lugs Tool		Wrench H10 mm
Torque		3 - 6 N.m 26.1 - 52 lb.in
Jumper screw Tool		Allen key 6 mm 0.236 in
Torque		6 - 12 N.m 52 - 104 lb.in
Screw clamp Tool		
Torque		
Wire stripping length		

The connecting capacity data for one Rigid: Solid/Stranded, or one Flexible conductor (when applicable) is a mandatory information required by IEC, UL and CSA standards (Copper conductors). All other data are provided as supplementary information only. For more details, please consult our CB, UL or CSA certificates and technical datasheet available on http://www.TE.com

RoHS RoHS · USR CNR · Gost R

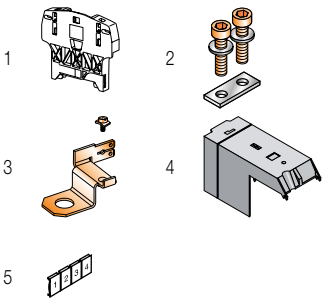

Accessories

	Description			Color	Type	Part Number		Pkg qty	Weight (1 pce) g
1	**End stops**	10 mm	0.394 in	Dark grey	BAZH1	1SNK900102R0000		20	24.00
2	**Jumper bars**	2 poles			BJS27-2	1SNA205772R1300		5	34.00
		3 poles			BJS27-3	1SNA205773R1400		5	52.00
3	**Splitters**	For 6.35x0.8mm faston clips and screws			DRF6	1SNA205767R1600		10	4.00
4	**Protecting covers**	IP20 rotating protecting cover		Grey	CPUF35	1SNA190016R1600		2	8.30
5	**Terminal block markers**	Blank card		White	RC810	1SNA234000R0200		1	8.20

Complete list of accessories is indicated in the terminal block datasheet.
Some accessories such as jumper bars may modify the terminal block's ratings: complete information in the accessories catalogue pages.

Technical data valid for copper conductors only.

1SNC165006S0201 - Rev. C

D70/32.FF power terminal blocks
Feed-through - 32 mm 1.260 in spacing

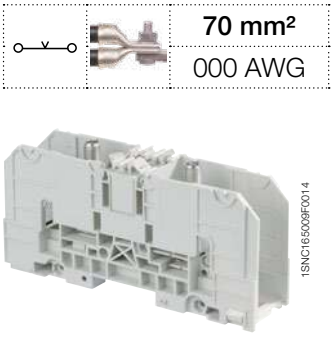

70 mm²	
000 AWG	

D70/32.FF

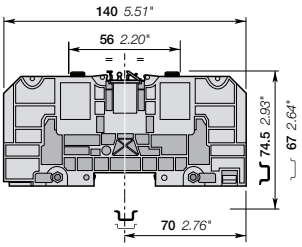

32 mm 1.260 in spacing

Description

- Rated cross section up to 300 mm² / 1000 Kcmil, IP20 protection cover,
- Holding foot on DIN 3 rail with two position for easy mounting, lug mounting in accordance with NF C 20-130 and DIN 46234, various marking options, rail or base mounting.

Ordering details

Description		Color	Type	Part Number		Pkg qty	Weight (1 pce) g
Feed-through	2 studs M8 without cover	Grey	D70/32.FF	1SNA190002R2100		3	269.00

Main technical data

Connecting capacity		NF C	DIN	UL	CSA
Lugs	Rigid: Solid/Stranded	6-95 mm²	6-70 mm²	000 AWG	
	Flexible with insulated ferrule	6-70 mm²	6-70 mm²		
	Gauge	C6			

		IEC	UL	CSA
Screw clamp	Rigid: Solid/Stranded			
	Flexible without ferrule			
	Gauge			

	IEC	UL	CSA
Bar			
Rated current	192 A	170 A	
Rated cross section	70 mm²	000 AWG	
Rated voltage	1000 V	600 V	
Impulse withstand voltage	8000 V		

Mounting instructions

Rail		TH 35-7.5, TH 35-15
Lugs Tool		Wrench H13 mm
Torque		6 - 12 N.m 52 - 104 lb.in
Jumper screw Tool		Allen key 6 mm 0.236 in
Torque		6 - 12 N.m 52 - 104 lb.in
Screw clamp Tool		
Torque		
Wire stripping length		

The connecting capacity data for one Rigid: Solid/Stranded, or one Flexible conductor (when applicable) is a mandatory information required by IEC, UL and CSA standards (Copper conductors). All other data are provided as supplementary information only. For more details, please consult our CB, UL or CSA certificates and technical datasheet available on http://www.TE.com

RoHS RoHS | USR CNR | Gost R

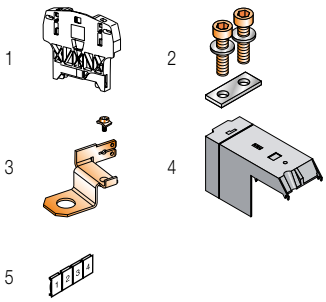

Accessories

	Description			Color	Type	Part Number		Pkg qty	Weight (1 pce) g
1	**End stops**	10 mm	0.394 in	Dark grey	BAZH1	1SNK900102R0000		20	24.00
2	**Jumper bars**	2 poles			BJS32-2	1SNA205774R1500		5	66.00
		3 poles			BJS32-3	1SNA205775R1600		5	105.80
3	**Splitters**	For 6.35x0.8mm faston clips and screws			DRF8	1SNA205768R2700		10	5.00
4	**Protecting covers**	IP20 rotating protecting cover		Grey	CPUF70	1SNA190017R1700		2	12.00
5	**Terminal block markers**	Blank card		White	RC810	1SNA234000R0200		1	8.20

Complete list of accessories is indicated in the terminal block datasheet.
Some accessories such as jumper bars may modify the terminal block's ratings: complete information in the accessories catalogue pages.

Technical data valid for copper conductors only.

1SNC165005S0201 - Rev. C

D120/42.FF power terminal blocks
Feed-through - 42 mm 1.653 in spacing

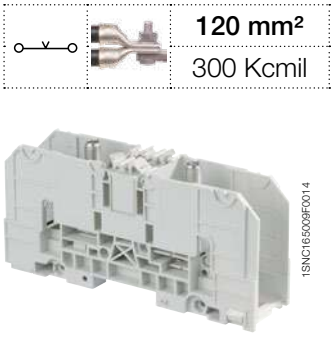

120 mm²
300 Kcmil

D120/42.FF

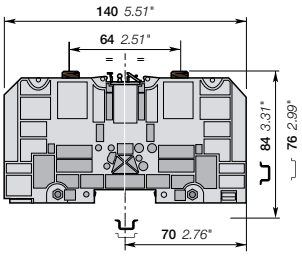

42 mm 1.653 in spacing

Description

- Rated cross section up to 300 mm² / 1000 Kcmil, IP20 protection cover,
- Holding foot on DIN 3 rail with two position for easy mounting, lug mounting in accordance with NF C 20-130 and DIN 46234, various marking options, rail or base mounting.

Ordering details

Description		Color	Type	Part Number		Pkg qty	Weight (1 pce) g
Feed-through	2 studs M10 without cover	Grey	D120/42.FF	1SNA190003R2200		1	423.00

Main technical data

Connecting capacity		NF C	DIN	UL	CSA
Lugs	Rigid: Solid/Stranded	6-150 mm²	6-120 mm²	300 Kcmil	
	Flexible with insulated ferrule	6-120 mm²			
	Gauge	C8			

		IEC	UL	CSA
Screw clamp	Rigid: Solid/Stranded			
	Flexible without ferrule			
	Gauge			

	IEC	UL	CSA
Bar			
Rated current	269 A	269 A	
Rated cross section	120 mm²	300 Kcmil	
Rated voltage	1000 V	600 V	
Impulse withstand voltage	8000 V		

Mounting instructions

Rail		TH 35-7.5, TH 35-15
Lugs Tool		Wrench H17 mm
Torque		10 - 20 N.m 87 - 174 lb.in
Jumper screw Tool		Allen key 6 mm 0.236 in
Torque		6 - 12 N.m 52 - 104 lb.in
Screw clamp Tool		
Torque		
Wire stripping length		

The connecting capacity data for one Rigid: Solid/Stranded, or one Flexible conductor (when applicable) is a mandatory information required by IEC, UL and CSA standards (Copper conductors). All other data are provided as supplementary information only. For more details, please consult our CB, UL or CSA certificates and technical datasheet available on http://www.TE.com

RoHS — USR CNR — Gost R

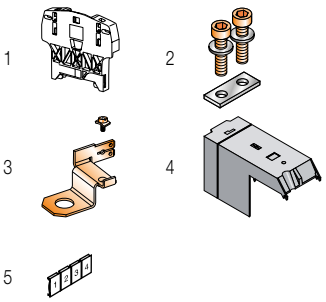

Accessories

	Description			Color	Type	Part Number		Pkg qty	Weight (1 pce) g
1	**End stops**	10 mm	0.394 in	Dark grey	BAZH1	1SNK900102R0000		20	24.00
2	**Jumper bars**	2 poles			BJS42-2	1SNA205776R1700		5	93.00
		3 poles			BJS42-3	1SNA205777R1000		5	153.00
3	**Splitters**	For 6.35x0.8mm faston clips and screws			DRF10	1SNA205769R2000		10	7.00
4	**Protecting covers**	IP20 rotating protecting cover		Grey	CPUF120	1SNA190018R2000		2	24.00
5	**Terminal block markers**	Blank card		White	RC810	1SNA234000R0200		1	8.20

Complete list of accessories is indicated in the terminal block datasheet.
Some accessories such as jumper bars may modify the terminal block's ratings: complete information in the accessories catalogue pages.

Technical data valid for copper conductors only.

1SNC165004S0201 - Rev. C

D185/55.FF power terminal blocks
Feed-through - 55 mm 2.165 in spacing

185 mm²
500 Kcmil

D185/55.FF

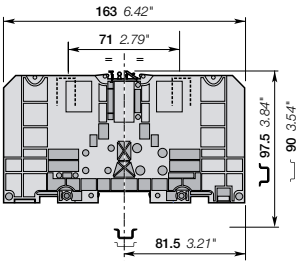

55 mm 2.165 in spacing

Description

- Rated cross section up to 300 mm² / 1000 Kcmil, IP20 protection cover,
- Holding foot on DIN 3 rail with two position for easy mounting, lug mounting in accordance with NF C 20-130 and DIN 46234, various marking options, rail or base mounting.

Ordering details

Description		Color	Type	Part Number		Pkg qty	Weight (1 pce) g
Feed-through	2 studs M12 without cover	Grey	D185/55.FF	1SNA190004R2300		1	615.00

Main technical data

Connecting capacity		NF C	DIN	UL	CSA
Lugs	Rigid: Solid/Stranded	25-240 mm²	6-185 mm²	500 Kcmil	
	Flexible with insulated ferrule	6-185 mm²			
	Gauge	C11			

		IEC	UL	CSA
Screw clamp	Rigid: Solid/Stranded			
	Flexible without ferrule			
	Gauge			

	IEC	UL	CSA
Bar			
Rated current	353 A	353 A	
Rated cross section	185 mm²	500 Kcmil	
Rated voltage	1000 V	600 V	
Impulse withstand voltage	8000 V		

Mounting instructions

Rail	TH 35-7.5, TH 35-15
Lugs Tool	Wrench H24 mm
Torque	14 - 30 N.m 123.9 - 265.5 lb.in
Jumper screw Tool	Allen key 6 mm 0.236 in
Torque	6 - 12 N.m 52 - 104 lb.in
Screw clamp Tool	
Torque	
Wire stripping length	

The connecting capacity data for one Rigid: Solid/Stranded, or one Flexible conductor (when applicable) is a mandatory information required by IEC, UL and CSA standards (Copper conductors). All other data are provided as supplementary information only. For more details, please consult our CB, UL or CSA certificates and technical datasheet available on http://www.TE.com

RoHS USR CNR Gost R

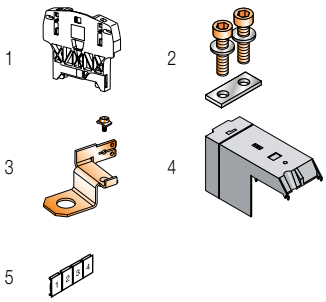

Accessories

	Description			Color	Type	Part Number		Pkg qty	Weight (1 pce) g
1	**End stops**	10 mm	0.394 in	Dark grey	BAZH1	1SNK900102R0000		20	24.00
2	**Jumper bars**	2 poles			BJS551-2	1SNA205778R2100		5	158.00
		3 poles			BJS551-3	1SNA205779R2200		5	266.00
3	**Splitters**	For 6.35x0.8mm faston clips and screws			DRF12	1SNA205770R2500		10	8.00
4	**Protecting covers**	IP20 rotating protecting cover		Grey	CPUF185	1SNA190019R2100		2	40.00
5	**Terminal block markers**	Blank card		White	RC810	1SNA234000R0200		1	8.20

Complete list of accessories is indicated in the terminal block datasheet.
Some accessories such as jumper bars may modify the terminal block's ratings: complete information in the accessories catalogue pages.

Technical data valid for copper conductors only.

1SNC165010S0201 - Rev. C

D300/55.FF power terminal blocks
Feed-through - 55 mm 2.165 in spacing

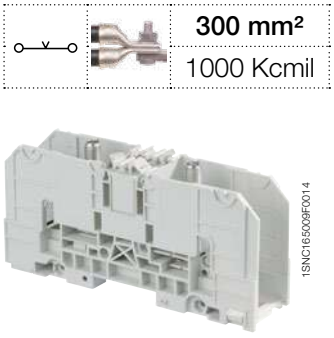

D300/55.FF

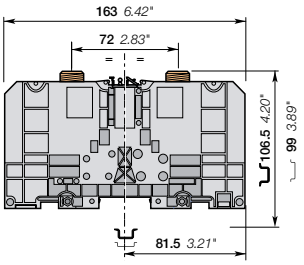

55 mm 2.165 in spacing

	300 mm²
	1000 Kcmil

Description

- Rated cross section up to 300 mm² / 1000 Kcmil, IP20 protection cover,
- Holding foot on DIN 3 rail with two position for easy mounting, lug mounting in accordance with NF C 20-130 and DIN 46234, various marking options, rail or base mounting.

Ordering details

Description		Color	Type	Part Number		Pkg qty	Weight (1 pce) g
Feed-through	2 studs M16 without cover	Grey	D300/55.FF	1SNA190005R2400		1	775.00

Main technical data

Connecting capacity		NF C	DIN	UL	CSA
Lugs	Rigid: Solid/Stranded	25-300 mm²	6-300 mm²	1000 Kcmil	
	Flexible with insulated ferrule	6-300 mm²			
	Gauge				

		IEC	UL	CSA
Screw clamp	Rigid: Solid/Stranded			
	Flexible without ferrule			
	Gauge			

	IEC	UL	CSA
Bar			
Rated current	520 A	460 A	
Rated cross section	300 mm²	1000 Kcmil	
Rated voltage	1000 V	600 V	
Impulse withstand voltage	8000 V		

Mounting instructions

Rail	TH 35-7.5, TH 35-15
Lugs Tool	Wrench H24 mm
Torque	25 - 50 N.m 217 - 435 lb.in
Jumper screw Tool	Allen key 6 mm 0.236 in
Torque	6 - 12 N.m 52 - 104 lb.in
Screw clamp Tool	
Torque	
Wire stripping length	

The connecting capacity data for one Rigid: Solid/Stranded, or one Flexible conductor (when applicable) is a mandatory information required by IEC, UL and CSA standards (Copper conductors). All other data are provided as supplementary information only. For more details, please consult our CB, UL or CSA certificates and technical datasheet available on http://www.TE.com

RoHS — USR CNR — Gost R

Accessories

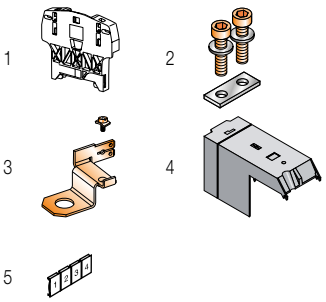

	Description			Color	Type	Part Number		Pkg qty	Weight (1 pce) g
1	**End stops**	10 mm	0.394 in	Dark grey	BAZH1	1SNK900102R0000		20	24.00
2	**Jumper bars**	2 poles			BJS551-2	1SNA205778R2100		5	158.00
		3 poles			BJS551-3	1SNA205779R2200		5	266.00
3	**Splitters**	For 6.35x0.8mm faston clips and screws			DRF16	1SNA205771R1200		10	7.00
4	**Protecting covers**	IP20 rotating protecting cover		Grey	CPUF185	1SNA190019R2100		2	40.00
5	**Terminal block markers**	Blank card		White	RC810	1SNA234000R0200		1	8.20

Complete list of accessories is indicated in the terminal block datasheet.
Some accessories such as jumper bars may modify the terminal block's ratings: complete information in the accessories catalogue pages.

Technical data valid for copper conductors only.

1SNC165011S0201 - Rev. C

D35/27.AF power terminal blocks
Feed-through - 27 mm 1.062 in spacing

35 mm²
1 AWG

D35/27.AF

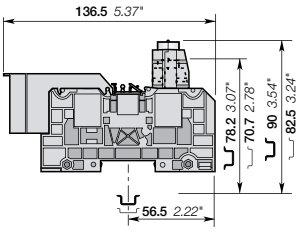

27 mm 1.062 in spacing

Description

- Rated cross section up to 240 mm² / 500 Kcmil, IP20 protection cover,
- Holding foot on DIN 3 rail with two position for easy mounting, lug mounting in accordance with NF C 20-130 and DIN 46234, various marking options, rail or base mounting.

Ordering details

Description		Color	Type	Part Numbers		Pkg qty	Weight (1 pce) g
Feed-through	1 stud M6 + 1 screw clamp with covers	Grey	D35/27.AF	1SNA190006R2500		10	149.00

Main technical data

Connecting capacity		NFC	DIN	UL	CSA
Lugs	Rigid: Solid/Stranded	2.5-35 mm²	2.5-50 mm²	1 AWG	
	Flexible with insulated ferrule	2.5-35 mm²	2.5-35 mm²		
	Gauge	C4			

		IEC	UL	CSA
Screw clamp	Rigid: Solid/Stranded	2.5-35 mm²	1-12 AWG	
	Flexible without ferrule	2.5-35 mm²		
	Gauge			

	IEC	UL	CSA
Bar			
Rated current	125 A	130 A	
Rated cross section	35 mm²	1 AWG	
Rated voltage	1000 V	600 V	
Impulse withstand voltage	8000 V		

Mounting instructions

Rail		TH 35-7.5, TH 35-15
Lugs Tool		Wrench H10 mm
Torque		3 - 6 N.m 26.1 - 52 lb.in
Jumper screw Tool		Allen key 6 mm 0.236 in
Torque		6 - 12 N.m 52 - 104 lb.in
Screw clamp Tool		Allen key 5 mm 0.197 in
Torque		3.5 ± 0.5 N.m 30.9 ± 4.43 lb.in
Wire stripping length		28 mm 1.102 in

The connecting capacity data for one Rigid: Solid/Stranded, or one Flexible conductor (when applicable) is a mandatory information required by IEC, UL and CSA standards (Copper conductors). All other data are provided as supplementary information only. For more details, please consult our CB, UL or CSA certificates and technical datasheet available on http://www.TE.com

RoHS USR CNR Gost R

Accessories

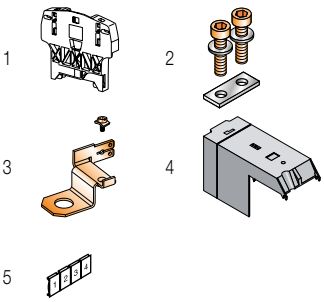

	Description			Color	Type	Part Numbers		Pkg qty	Weight (1 pce) g
1	**End stops**	10 mm	0.394 in	Dark grey	BAZH1	1SNK900102R0000		20	24.00
2	**Jumper bars**	2 poles			BJS27-2	1SNA205772R1300		5	34.00
		3 poles			BJS27-3	1SNA205773R1400		5	52.00
3	**Splitters**	For 6.35x0.8mm faston clips and screws			DRF6	1SNA205767R1600		10	4.00
4	**Protecting covers**	IP20 rotating protecting cover		Grey	CPUF35	1SNA190016R1600		2	8.30
5	**Terminal block markers**	Blank card		White	RC810	1SNA234000R0200		1	8.20

Complete list of accessories is indicated in the terminal block datasheet.
Some accessories such as jumper bars may modify the terminal block's ratings: complete information in the accessories catalogue pages.

Technical data valid for copper conductors only.

D70/32.AF power terminal blocks

Feed-through - 32 mm 1.260 in spacing

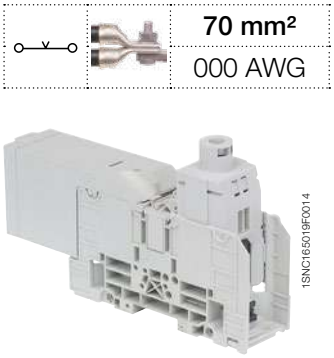

70 mm²	
000 AWG	

D70/32.AF

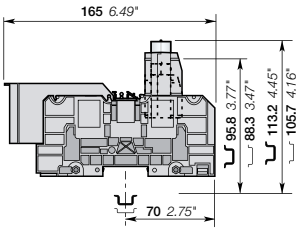

32 mm 1.260 in spacing

Description

- Rated cross section up to 240 mm² / 500 Kcmil, IP20 protection cover,
- Holding foot on DIN 3 rail with two position for easy mounting, lug mounting in accordance with NF C 20-130 and DIN 46234, various marking options, rail or base mounting.

Ordering details

Description		Color	Type	Part Numbers		Pkg qty	Weight (1 pce) g
Feed-through	1 stud M8 + 1 screw clamp with covers	Grey	D70/32.AF	1SNA190007R2600		3	269.00

Main technical data

Connecting capacity		NFC	DIN	UL	CSA
Lugs	Rigid: Solid/Stranded	6-95 mm²	6-70 mm²	000 AWG	
	Flexible with insulated ferrule	6-70 mm²	6-70 mm²		
	Gauge				

		IEC	UL	CSA
Screw clamp	Rigid: Solid/Stranded	6-95 mm²	10-000 AWG	
	Flexible without ferrule	6-70 mm²		
	Gauge			

	IEC	UL	CSA
Bar			
Rated current	192 A	165 A	
Rated cross section	70 mm²	000 AWG	
Rated voltage	1000 V	600 V	
Impulse withstand voltage	8000 V		

Mounting instructions

Rail	TH 35-7.5, TH 35-15
Lugs Tool	Wrench H13 mm
Torque	6 - 12 N.m 52 - 104 lb.in
Jumper screw Tool	Allen key 6 mm 0.236 in
Torque	6 - 12 N.m 52 - 104 lb.in
Screw clamp Tool	Wrench 6 mm 0.236 in
Torque	7 ±1 N.m 61.9 ± 8.85 lb.in
Wire stripping length	33 mm 1.299 in

The connecting capacity data for one Rigid: Solid/Stranded, or one Flexible conductor (when applicable) is a mandatory information required by IEC, UL and CSA standards (Copper conductors). All other data are provided as supplementary information only. For more details, please consult our CB, UL or CSA certificates and technical datasheet available on http://www.TE.com

RoHS RoHS USR CNR Gost R

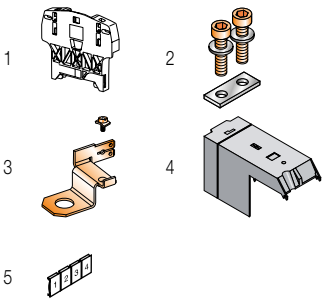

Accessories

	Description			Color	Type	Part Numbers		Pkg qty	Weight (1 pce) g
1	**End stops**	10 mm	0.394 in	Dark grey	BAZH1	1SNK900102R0000		20	24.00
2	**Jumper bars**	2 poles			BJS32-2	1SNA205774R1500		5	66.00
		3 poles			BJS32-3	1SNA205775R1600		5	105.80
3	**Splitters**	For 6.35x0.8mm faston clips and screws			DRF8	1SNA205768R2700		10	5.00
4	**Protecting covers**	IP20 rotating protecting cover		Grey	CPUF70	1SNA190017R1700		2	12.00
5	**Terminal block markers**	Blank card		White	RC810	1SNA234000R0200		1	8.20

Complete list of accessories is indicated in the terminal block datasheet.
Some accessories such as jumper bars may modify the terminal block's ratings: complete information in the accessories catalogue pages.

Technical data valid for copper conductors only.

1SNC165007S0201 - Rev. B

D120/42.AF power terminal blocks
Feed-through - 42 mm 1.653 in spacing

120 mm²
300 Kcmil

D120/42.AF

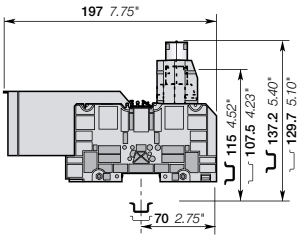

42 mm 1.653 in spacing

Description

- Rated cross section up to 240 mm² / 500 Kcmil, IP20 protection cover,
- Holding foot on DIN 3 rail with two position for easy mounting, lug mounting in accordance with NF C 20-130 and DIN 46234, various marking options, rail or base mounting.

Ordering details

Description		Color	Type	Part Numbers		Pkg qty	Weight (1 pce) g
Feed-through	1 stud M10 + 1 screw clamp with covers	Grey	D120/42.AF	1SNA190008R0700		1	423.00

Main technical data

Connecting capacity		NFC	DIN	UL	CSA
Lugs	Rigid: Solid/Stranded	6-150 mm²	6-120 mm²	300 Kcmil	
	Flexible with insulated ferrule	6-120 mm²			
	Gauge	C8			

		IEC	UL	CSA
Screw clamp	Rigid: Solid/Stranded	6-150 mm²	10 AWG-300 Kcmil	
	Flexible without ferrule	6-120 mm²		
	Gauge			

	IEC	UL	CSA
Bar			
Rated current	269 A	240 A	
Rated cross section	120 mm²	300 Kcmil	
Rated voltage	1000 V	600 V	
Impulse withstand voltage	8000 V		

Mounting instructions

Rail		TH 35-7.5, TH 35-15
Lugs Tool		Wrench H17 mm
Torque		10 - 20 N.m 87 - 174 lb.in
Jumper screw Tool		Allen key 6 mm 0.236 in
Torque		6 - 12 N.m 52 - 104 lb.in
Screw clamp Tool		Allen key 8 mm 0.315 in
Torque		11 ± 1 N.m 97.36 ± 8.85 lb.in
Wire stripping length		38 mm 1.496 in

The connecting capacity data for one Rigid: Solid/Stranded, or one Flexible conductor (when applicable) is a mandatory information required by IEC, UL and CSA standards (Copper conductors). All other data are provided as supplementary information only. For more details, please consult our CB, UL or CSA certificates and technical datasheet available on http://www.TE.com

RoHS — USR CNR — Gost R

Accessories

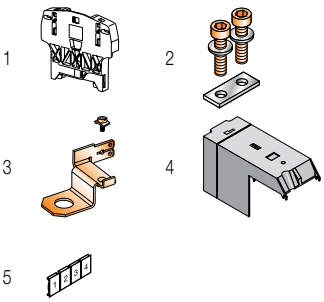

	Description			Color	Type	Part Numbers		Pkg qty	Weight (1 pce) g
1	**End stops**	10 mm	0.394 in	Dark grey	BAZH1	1SNK900102R0000		20	24.00
2	**Jumper bars**	2 poles			BJS42-2	1SNA205776R1700		5	93.00
		3 poles			BJS42-3	1SNA205777R1000		5	153.00
3	**Splitters**	For 6.35x0.8mm faston clips and screws			DRF10	1SNA205769R2000		10	7.00
4	**Protecting covers**	IP20 rotating protecting cover		Grey	CPUF120	1SNA190018R2000		2	24.00
5	**Terminal block markers**	Blank card		White	RC810	1SNA234000R0200		1	8.20

Complete list of accessories is indicated in the terminal block datasheet.
Some accessories such as jumper bars may modify the terminal block's ratings: complete information in the accessories catalogue pages.

Technical data valid for copper conductors only.

D185/55.AF power terminal blocks

Feed-through - 55 mm 2.165 in spacing

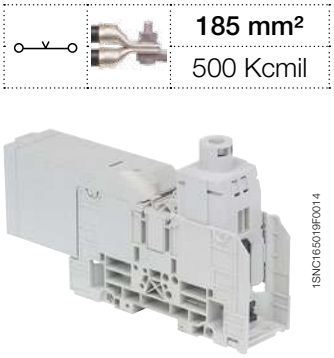

1SNC165019F0014

D185/55.AF

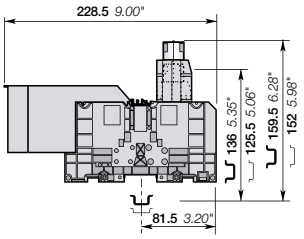

55 mm 2.165 in spacing

	185 mm²
	500 Kcmil

Description

- Rated cross section up to 240 mm² / 500 Kcmil, IP20 protection cover,
- Holding foot on DIN 3 rail with two position for easy mounting, lug mounting in accordance with NF C 20-130 and DIN 46234, various marking options, rail or base mounting.

Ordering details

Description		Color	Type	Part Numbers		Pkg qty	Weight (1 pce) g
Feed-through	1 stud M12 + 1 screw clamp with covers	Grey	D185/55.AF	1SNA190009R0000		1	937.00

Main technical data

Connecting capacity		NFC	DIN	UL	CSA
Lugs	Rigid: Solid/Stranded	25-240 mm²	6-185 mm²	500 Kcmil	
	Flexible with insulated ferrule	6-185 mm²			
	Gauge	C11			

		IEC	UL	CSA
Screw clamp	Rigid: Solid/Stranded	25-240 mm²	4 AWG-500 Kcmil	
	Flexible without ferrule	25-185 mm²		
	Gauge			

	IEC	UL	CSA
Bar			
Rated current	353 A	320 A	
Rated cross section	185 mm²	500 Kcmil	
Rated voltage	1000 V	600 V	
Impulse withstand voltage	8000 V		

Mounting instructions

Rail	TH 35-7.5, TH 35-15
Lugs Tool	Wrench H24 mm
Torque	14 - 30 N.m 123.9 - 265.5 lb.in
Jumper screw Tool	Allen key 6 mm 0.236 in
Torque	6 - 12 N.m 53.1 - 106.2 lb.in
Screw clamp Tool	Allen key 10 mm 0.394 in
Torque	15 ± 1 N.m 132.7 ± 8.85 lb.in
Wire stripping length	47 mm 1.850 in

The connecting capacity data for one Rigid: Solid/Stranded, or one Flexible conductor (when applicable) is a mandatory information required by IEC, UL and CSA standards (Copper conductors). All other data are provided as supplementary information only. For more details, please consult our CB, UL or CSA certificates and technical datasheet available on http://www.TE.com

RoHS RoHS · USR CNR · Gost R

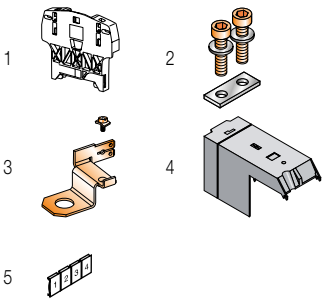

Accessories

	Description			Color	Type	Part Numbers		Pkg qty	Weight (1 pce) g
1	**End stops**	10 mm	0.394 in	Dark grey	BAZH1	1SNK900102R0000		20	24.00
2	**Jumper bars**	2 poles			BJS551-2	1SNA205778R2100		5	158.00
		3 poles			BJS551-3	1SNA205779R2200		5	266.00
3	**Splitters**	For 6.35x0.8mm faston clips and screws			DRF12	1SNA205770R2500		10	8.00
4	**Protecting covers**	IP20 rotating protecting cover		Grey	CPUF185	1SNA190019R2100		2	40.00
5	**Terminal block markers**	Blank card		White	RC810	1SNA234000R0200		1	8.20

Complete list of accessories is indicated in the terminal block datasheet.
Some accessories such as jumper bars may modify the terminal block's ratings: complete information in the accessories catalogue pages.

Technical data valid for copper conductors only.

1SNC165009S0201 - Rev. B

Main dimensions mm

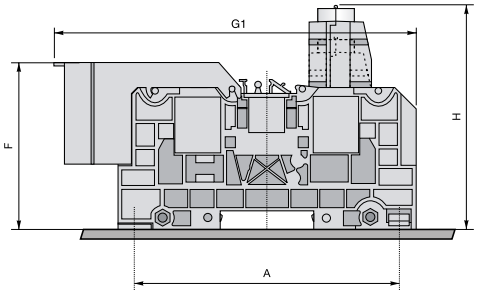

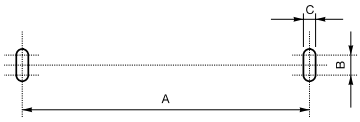

D 35/27.AF - D 70/32.AF - D 120/42.AF
D 35/27.FF - D 70/32.FF - D 120/42.FF

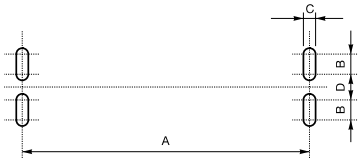

D 185/55.AF
D 185/55.FF - D 300/55.FF

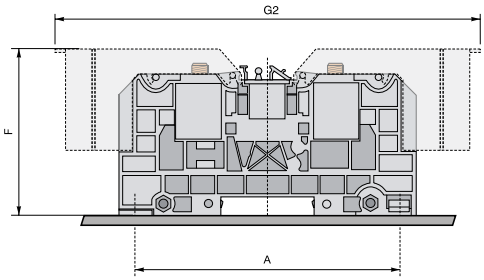

Type	Mounting with:	A	B	C	D	F	G1	G2	H
		Dimensions mm							
D35/27...	2 Screws	100.5	7.5	6.5	/	63.5	136.5	160	82.5
D70/32...	2 Screws	120	7.5	6.5	/	72.5	165	190.5	105.7
D120/42...	2 Screws	120	7.5	6.5	/	83.5	197	255.5	129.7
D185/55...	4 Screws	135	13.5	6.5	8.5	103.5	228.5	295	151.5
D300/55...	4 Screws	135	13.5	6.5	8.5	105	/	295	/

Marking

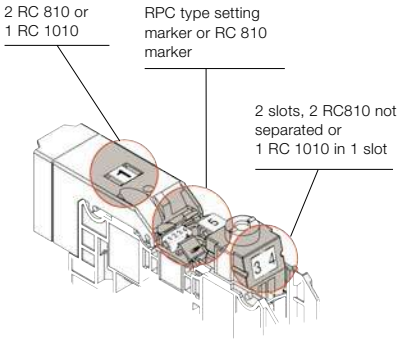

Jumper bar

- Move the marker holders up
- Cut out the partition
- Screw the jumper bar

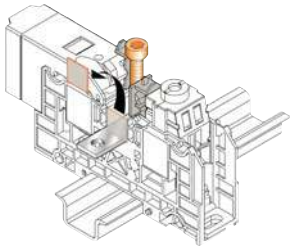

Locking foot operating with screwdriver DIA. 4 mm

Center opening (to be made after jumper bar has been removed) "monostable action".

As soon as the screwdriver is removed, the locking foot comes back to closed position

Side opening with
2 positions.
The locking foot remains
in open or closed position.

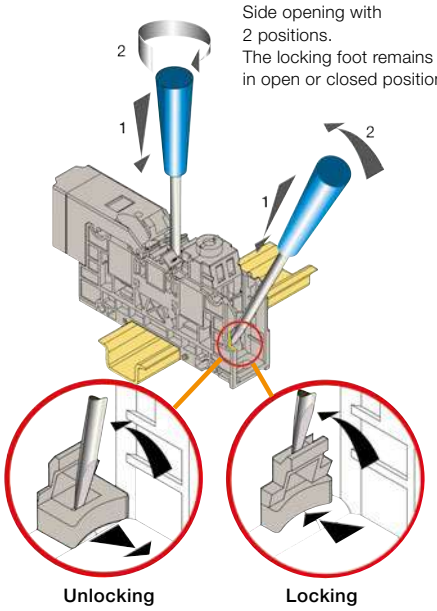

Locking

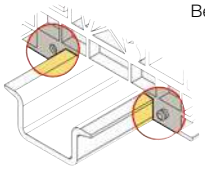

Between blocks with pins

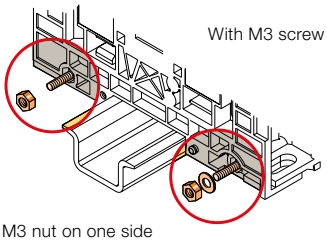

With M3 screw

M3 nut on one side
M3 nut + washer on the other side

Mounting of the derivative system

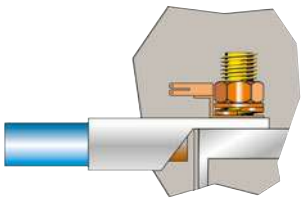

1SNC165014S0201

M35/26.FF stud terminal blocks

Feed-through - 26 mm 1.024 in spacing

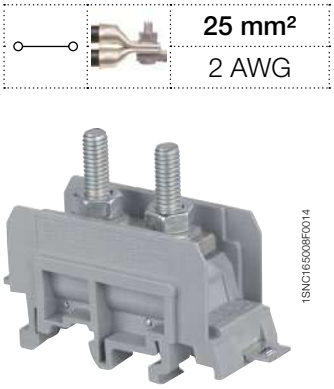

25 mm²
2 AWG

1SNC165008F0014

M35/26.FF

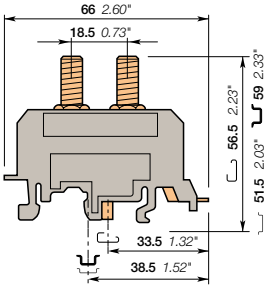

26 mm 1.024 in spacing

Description

- Compact two stud terminal block,
- Lug mounting in accordance with NF C 20-130 and DIN 46234,
- Various marking options,
- Rail or base mounting.

Ordering details

Description		Color	Type	Part Number		Pkg pce	Weight (1 pce) g
Feed-through	2 studs M6 linked by 1 removable bar 16 x 4 mm	Grey	M35/26.FF	1SNA115140R2300		10	64.00

Main technical data

		NFC	DIN	UL	CSA
Lugs	Rigid: Solid/Stranded	4-35 mm²	2.5-50 mm²	10-2 AWG	max 4 AWG
	Flexible with insulated ferrule	4-25 mm²	2.5-25 mm²		
	Gauge	C3			

		IEC	DIN	UL	CSA
Screw clamp	Rigid: Solid/Stranded				
	Flexible without ferrule				
	Gauge				

	IEC	DIN	UL	CSA
Bar	16 x 4 mm	0.63 x 0.16 in		
Rated current	101 A	125 A	115 A	125 A
Rated cross section	25 mm²	35 mm²	2 AWG	4 AWG
Rated voltage	1000 V		600 V	600 V
Impulse withstand voltage	8000 V			

Mounting instructions

Rail	G32, TH 35-7.5, TH 35-15
Lugs Tool	Wrench H10 mm
Torque	4.5-9 N.m 39.8-79.6 lb.in
Jumper screw Tool	
Torque	
Screw clamp Tool	
Torque	
Wire stripping length	

The connecting capacity data for one Rigid: Solid/Stranded, or one Flexible conductor (when applicable) is a mandatory information required by IEC, UL and CSA standards (Copper conductors). All other data are provided as supplementary information only. For more details, please consult our CB, UL or CSA certificates and technical datasheet available on http://www.TE.com

RoHS RoHS · USR · CSA · Gost R

Accessories

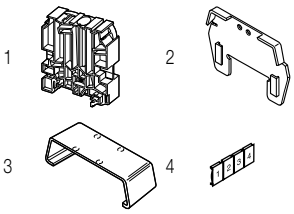

	Description			Color	Type	Part Number		Pkg pce	Weight (1 pce) g
1	**End stops**	9.1 mm	0.358 in	Grey	BAMH	1SNA114836R0000		50	13.00
		10 mm	0.394 in	Dark grey	BAZH1	1SNK900102R0000		20	24.00
2	**Circuit separators**	Circuit separators		Grey	ECP26	1SNA113689R2400		10	6.40
3	**Protecting covers**			Transparent	CPP261	1SNA168202R1300		5	5.00
		marked cut: 2 blocks			CPP262	1SNA168201R1200		5	10.00
		marked cut: 3 blocks			CPP263	1SNA163403R2000		5	17.00
4	**Terminal block markers**	Label holder		Grey	PEP	1SNA113762R2400		50	0.46
		Terminal block markers		White	RC610	1SNA233000R0100		1	7.50

Complete list of accessories is indicated in the terminal block datasheet.
Some accessories such as jumper bars may modify the terminal block's ratings: complete information in the accessories catalogue pages.

Technical data valid for copper conductors only.

1SNC165019S0201 - Rev. B

M70/31.FF stud terminal blocks

Feed-through - 31 mm 1.220 in spacing

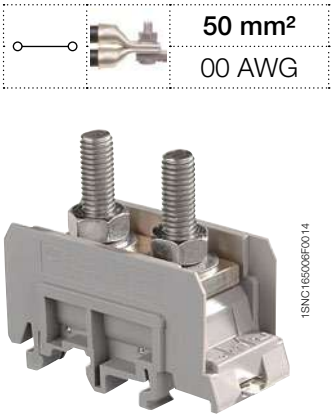

1SNC165006F0014

M70/31.FF

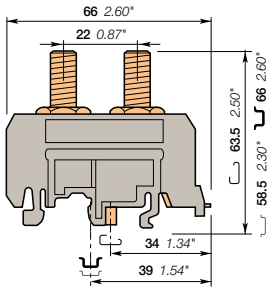

31 mm 1.220 in spacing

	50 mm²
	00 AWG

Description

- Compact two stud terminal block,
- Lug mounting in accordance with NF C 20-130 and DIN 46234,
- Various marking options,
- Rail or base mounting.

Ordering details

Description		Color	Type	Part Number		Pkg pce	Weight (1 pce) g
Feed-through	2 studs M8 linked by 1 removable bar 20 x 5 mm	Grey	M70/31.FF	1SNA115143R1200		10	110.00

Main technical data

		NFC	DIN	UL	CSA
Lugs	Rigid: Solid/Stranded	6-70 mm²	2.5-70 mm²	4-00 AWG	max 0 AWG
	Flexible with insulated ferrule	6-50 mm²	2.5-50 mm²		
	Gauge	C5			

		IEC	DIN	UL	CSA
Screw clamp	Rigid: Solid/Stranded				
	Flexible without ferrule				
	Gauge				

	IEC	DIN	UL	CSA
Bar	20 x 5 mm	0.78 x 0.20 in		
Rated current	150 A	178 A	175 A	200 A
Rated cross section	50 mm²	50 mm²	00 AWG	0 AWG
Rated voltage	1000 V		600 V	600 V
Impulse withstand voltage	8000 V			

Mounting instructions

Rail	G32, TH 35-7.5, TH 35-15
Lugs Tool	Wrench H13 mm
Torque	6-12 N.m 53.1-106.2 lb.in
Jumper screw Tool	
Torque	
Screw clamp Tool	
Torque	
Wire stripping length	

The connecting capacity data for one Rigid: Solid/Stranded, or one Flexible conductor (when applicable) is a mandatory information required by IEC, UL and CSA standards (Copper conductors). All other data are provided as supplementary information only. For more details, please consult our CB, UL or CSA certificates and technical datasheet available on http://www.TE.com

RoHS USR CSA Gost R

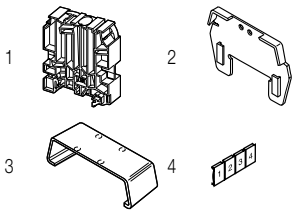

Accessories

	Description			Color	Type	Part Number		Pkg pce	Weight (1 pce) g
1	**End stops**	9.1 mm	0.358 in	Grey	BAMH	1SNA114836R0000		50	13.00
		10 mm	0.394 in	Dark grey	BAZH1	1SNK900102R0000		20	24.00
2	**Circuit separators**	Circuit separators		Grey	ECP31	1SNA113690R2100		10	6.70
3	**Protecting covers**			Transparent	CPP311	1SNA168204R1500		5	7.00
		marked cut: 2 blocks			CPP312	1SNA168203R1400		5	14.00
		marked cut: 3 blocks			CPP313	1SNA163409R0600		5	23.00
4	**Terminal block markers**	Label holder		Grey	PEP	1SNA113762R2400		50	0.46
		Terminal block markers		White	RC610	1SNA233000R0100		1	7.50

Complete list of accessories is indicated in the terminal block datasheet.
Some accessories such as jumper bars may modify the terminal block's ratings: complete information in the accessories catalogue pages.

Technical data valid for copper conductors only.

1SNC165020S0201 - Rev. B

M120/35.FF stud terminal blocks

Feed-through - 35 mm 1.380 in spacing

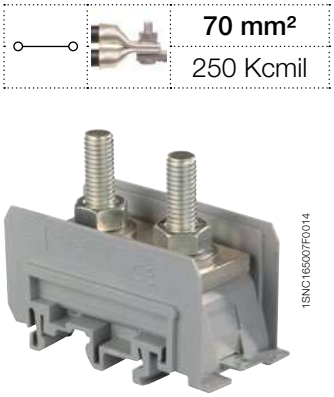

M120/35.FF

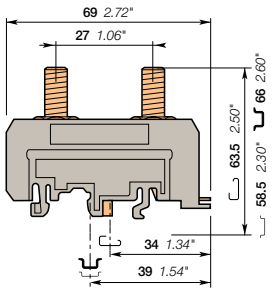

35 mm 1.380 in spacing

		70 mm²
		250 Kcmil

Description

- Compact two stud terminal block,
- Lug mounting in accordance with NF C 20-130 and DIN 46234,
- Various marking options,
- Rail or base mounting.

Ordering details

Description		Color	Type	Part Number		Pkg pce	Weight (1 pce) g
Feed-through	2 studs M8 linked by 1 removable bar 25 x 5 mm	Grey	M120/35.FF	1SNA115146R1500		10	130.00

Main technical data

		NFC	DIN	UL	CSA
Lugs	Rigid: Solid/Stranded	6-95 mm²	2.5-70 mm²	2-250 kcmil	max 000 AWG
	Flexible with insulated ferrule	6-70 mm²	2.5-70 mm²		
	Gauge	C6			

		IEC	DIN	UL	CSA
Screw clamp	Rigid: Solid/Stranded				
	Flexible without ferrule				
	Gauge				

	IEC	DIN	UL	CSA
Bar	25 x 5 mm	1 x 0.20 in		
Rated current	192 A	220 A	255 A	270 A
Rated cross section	70 mm²	70 mm²	250 Kcmil	000 AWG
Rated voltage	1000 V		600 V	600 V
Impulse withstand voltage	8000 V			

Mounting instructions

Rail		G32, TH 35-7.5, TH 35-15
Lugs Tool		Wrench H13 mm
Torque		6-12 N.m 53.1-106.2 lb.in
Jumper screw Tool		
Torque		
Screw clamp Tool		
Torque		
Wire stripping length		

The connecting capacity data for one Rigid: Solid/Stranded, or one Flexible conductor (when applicable) is a mandatory information required by IEC, UL and CSA standards (Copper conductors). All other data are provided as supplementary information only. For more details, please consult our CB, UL or CSA certificates and technical datasheet available on http://www.TE.com

RoHS RoHS | USR | CSA | Gost R

Accessories

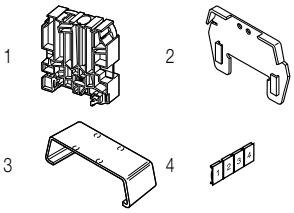

	Description			Color	Type	Part Number		Pkg pce	Weight (1 pce) g
1	**End stops**	9.1 mm	0.358 in	Grey	BAMH	1SNA114836R0000		50	13.00
		10 mm	0.394 in	Dark grey	BAZH1	1SNK900102R0000		20	24.00
2	**Circuit separators**	Circuit separators		Grey	ECP35	1SNA113691R1600		10	10.00
3	**Protecting covers**			Transparent	CPP351	1SNA168206R1700		5	8.00
		marked cut: 2 blocks			CPP352	1SNA168205R1600		5	20.00
		marked cut: 3 blocks			CPP353	1SNA163418R2600		5	20.00
4	**Terminal block markers**	Label holder		Grey	PEP	1SNA113762R2400		50	0.46
		Terminal block markers		White	RC610	1SNA233000R0100		1	7.50

Complete list of accessories is indicated in the terminal block datasheet.
Some accessories such as jumper bars may modify the terminal block's ratings: complete information in the accessories catalogue pages.

Technical data valid for copper conductors only.

1SNC165021S0201 - Rev. B

M300/42.FF stud terminal blocks
Feed-through - 42 mm 1.653 in spacing

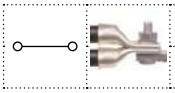

120 mm²
500 Kcmil

M300/42.FF

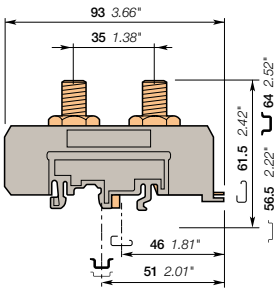

42 mm 1.653 in spacing

Description

- Compact two stud terminal block,
- Lug mounting in accordance with NF C 20-130 and DIN 46234,
- Various marking options,
- Rail or base mounting.

Ordering details

Description		Color	Type	Part Number		Pkg pce	Weight (1 pce) g
Feed-through	2 studs M10 linked by 1 removable bar 32 x 8 mm	Grey	M300/42.FF	1SNA115149R2000		10	220.00

Main technical data

		NFC	DIN	UL	CSA
Lugs	Rigid: Solid/Stranded	50-150 mm²	6-150 mm²	0-500 kcmil	max 500 Kcmil
	Flexible with insulated ferrule	50-120 mm²	6-120 mm²		
	Gauge	C8			

		IEC	DIN	UL	CSA
Screw clamp	Rigid: Solid/Stranded				
	Flexible without ferrule				
	Gauge				

	IEC	DIN	UL	CSA
Bar	32 x 8 mm	1.26 x 0.32 in		
Rated current	269 A	265 A	230 A	550 A
Rated cross section	120 mm²	120 mm²	500 Kcmil	500 Kcmil
Rated voltage	1000 V		600 V	600 V
Impulse withstand voltage	8000 V			

Mounting instructions

Rail	G32, TH 35-7.5, TH 35-15
Lugs Tool	Wrench H16 mm
Torque	10-20 N.m 88.5-177 lb.in
Jumper screw Tool	
Torque	
Screw clamp Tool	
Torque	
Wire stripping length	

The connecting capacity data for one Rigid: Solid/Stranded, or one Flexible conductor (when applicable) is a mandatory information required by IEC, UL and CSA standards (Copper conductors). All other data are provided as supplementary information only. For more details, please consult our CB, UL or CSA certificates and technical datasheet available on http://www.TE.com

RoHS RoHS · CSA · Gost R

Accessories

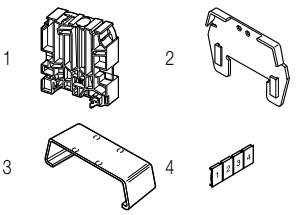

	Description			Color	Type	Part Number		Pkg pce	Weight (1 pce) g
1	**End stops**	9.1 mm	0.358 in	Grey	BAMH	1SNA114836R0000		50	13.00
		10 mm	0.394 in	Dark grey	BAZH1	1SNK900102R0000		20	24.00
2	**Circuit separators**	Circuit separators		Grey	ECP42	1SNA113692R1700		10	20.00
3	**Protecting covers**			Transparent	CPP421	1SNA168208R2100		5	13.00
		marked cut: 2 blocks			CPP422	1SNA168207R1000		5	30.00
		marked cut: 3 blocks			CPP423	1SNA163424R1400		5	40.00
4	**Terminal block markers**	Label holder		Grey	PEP	1SNA113762R2400		50	0.46
		Terminal block markers		White	RC610	1SNA233000R0100		1	7.50

Complete list of accessories is indicated in the terminal block datasheet.
Some accessories such as jumper bars may modify the terminal block's ratings: complete information in the accessories catalogue pages.

Technical data valid for copper conductors only.

M35/26.AF stud terminal blocks

Feed-through - 26 mm 1.024 in spacing

25 mm²

2 AWG

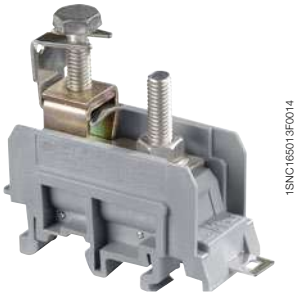

1SNC1650130F0014

M35/26.AF

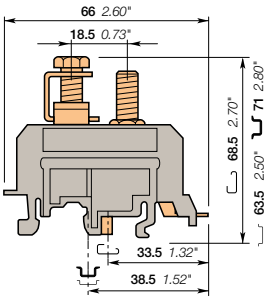

26 mm 1.024 in spacing

Description

- Compact one stud / one clamp terminal block,
- Lug mounting in accordance with NF C 20-130 and DIN 46234,
- Various marking options,
- Rail or base mounting.

Ordering details

Description		Color	Type	Part Number		Pkg pce	Weight (1 pce) g
Feed-through	1 stud M6 + 1 screw clamp	Grey	M35/26.AF	1SNA115139R1600		10	60.00

Main technical data

		NFC	DIN	UL	CSA
Lugs	Rigid: Solid/Stranded	4-35 mm²	2.5-50 mm²	10-2 AWG	10-4 AWG
	Flexible with insulated ferrule	4-25 mm²	2.5-25 mm²		
	Gauge	C3			

		IEC	DIN	UL	CSA
Screw clamp	Rigid: Solid/Stranded	6-50 mm²	6-50 mm²	14-2 AWG	10-4 AWG
	Flexible without ferrule	6-25 mm²			
	Gauge				

	IEC	DIN	UL	CSA
Bar				
Rated current	101 A	115 A	115 A	125 A
Rated cross section	25 mm²	25 mm²	2 AWG	4 AWG
Rated voltage	1000 V		600 V	600 V
Impulse withstand voltage	8000 V			

Mounting instructions

Rail		G32, TH 35-7.5, TH 35-15
Lugs Tool		Wrench H10 mm
Torque		4.5-9 N.m 39.8-79.6 lb.in
Jumper screw Tool		
Torque		
Screw clamp Tool		Wrench H10 mm
Torque		5 ± 0.5 N.m 44.25 ± 4.43 lb.in
Wire stripping length		19 mm 0.748 in

The connecting capacity data for one Rigid: Solid/Stranded, or one Flexible conductor (when applicable) is a mandatory information required by IEC, UL and CSA standards (Copper conductors). All other data are provided as supplementary information only. For more details, please consult our CB, UL or CSA certificates and technical datasheet available on http://www.TE.com

RoHS RoHS · USR · CSA · Gost R

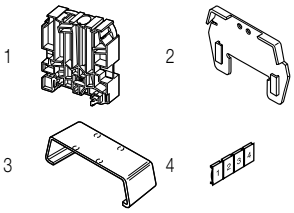

Accessories

	Description			Color	Type	Part Number		Pkg pce	Weight (1 pce) g
1	**End stops**	9.1 mm	0.358 in	Grey	BAMH	1SNA114836R0000		50	13.00
		10 mm	0.394 in	Dark grey	BAZH1	1SNK900102R0000		20	24.00
2	**Circuit separators**	Circuit separators		Grey	ECP26	1SNA113689R2400		10	6.40
3	**Protecting covers**			Transparent	CPP261	1SNA168202R1300		5	5.00
		marked cut: 2 blocks			CPP262	1SNA168201R1200		5	10.00
		marked cut: 3 blocks			CPP263	1SNA163403R2000		5	17.00
4	**Terminal block markers**	Label holder		Grey	PEP	1SNA113762R2400		50	0.46
		Terminal block markers		White	RC610	1SNA233000R0100		1	7.50

Complete list of accessories is indicated in the terminal block datasheet.
Some accessories such as jumper bars may modify the terminal block's ratings: complete information in the accessories catalogue pages.

Technical data valid for copper conductors only.

1SNC1650233S0201 - Rev. B

M70/31.AF stud terminal blocks
Feed-through - 31 mm 1.220 in spacing

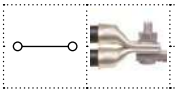

50 mm²	
0 AWG	

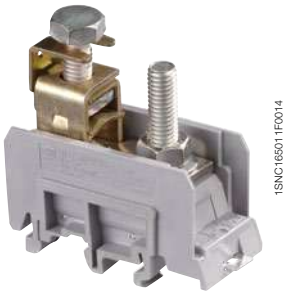

M70/31.AF

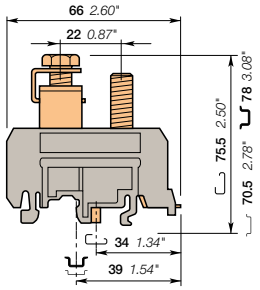

31 mm 1.220 in spacing

Description

- Compact one stud / one clamp terminal block,
- Lug mounting in accordance with NF C 20-130 and DIN 46234,
- Various marking options,
- Rail or base mounting.

Ordering details

Description		Color	Type	Part Number		Pkg pce	Weight (1 pce) g
Feed-through	1 stud M8 + 1 screw clamp	Grey	M70/31.AF	1SNA115142R1100		10	110.00

Main technical data

		NFC	DIN	UL	CSA
Lugs	Rigid: Solid/Stranded	6-70 mm²	2.5-70 mm²	8-0 AWG	6-0 AWG
	Flexible with insulated ferrule	6-50 mm²	2.5-50 mm²		
	Gauge	C5			

		IEC	DIN	UL	CSA
Screw clamp	Rigid: Solid/Stranded	6-70 mm²	6-70 mm²	8-0 AWG	6-0 AWG
	Flexible without ferrule	6-50 mm²			
	Gauge				

	IEC	DIN	UL	CSA
Bar				
Rated current	150 A	178 A	150 A	200 A
Rated cross section	50 mm²	50 mm²	0 AWG	0 AWG
Rated voltage	1000 V		600 V	600 V
Impulse withstand voltage	8000 V			

Mounting instructions

Rail		G32, TH 35-7.5, TH 35-15
Lugs Tool		Wrench H13 mm
Torque		6-12 N.m 53.1-106.2 lb.in
Jumper screw Tool		
Torque		
Screw clamp Tool		Wrench H13 mm
Torque		7 ± 1 N.m 61.9 ± 8.85 lb.in
Wire stripping length		22 mm 0.866 in

The connecting capacity data for one Rigid: Solid/Stranded, or one Flexible conductor (when applicable) is a mandatory information required by IEC, UL and CSA standards (Copper conductors). All other data are provided as supplementary information only. For more details, please consult our CB, UL or CSA certificates and technical datasheet available on http://www.TE.com

RoHS RoHS | USR | CSA | Gost R

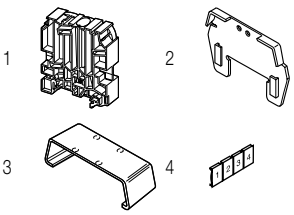

Accessories

	Description			Color	Type	Part Number		Pkg pce	Weight (1 pce) g
1	**End stops**	9.1 mm	0.358 in	Grey	BAMH	1SNA114836R0000		50	13.00
		10 mm	0.394 in	Dark grey	BAZH1	1SNK900102R0000		20	24.00
2	**Circuit separators**	Circuit separators		Grey	ECP31	1SNA113690R2100		10	6.70
3	**Protecting covers**			Transparent	CPP311	1SNA168204R1500		5	7.00
		marked cut: 2 blocks			CPP312	1SNA168203R1400		5	14.00
		marked cut: 3 blocks			CPP313	1SNA163409R0600		5	23.00
4	**Terminal block markers**	Label holder		Grey	PEP	1SNA113762R2400		50	0.46
		Terminal block markers		White	RC610	1SNA233000R0100		1	7.50

Complete list of accessories is indicated in the terminal block datasheet.
Some accessories such as jumper bars may modify the terminal block's ratings: complete information in the accessories catalogue pages.

Technical data valid for copper conductors only.

1SNC165024S0201 - Rev. B

M120/35.AF stud terminal blocks

Feed-through - 35 mm 1.380 in spacing

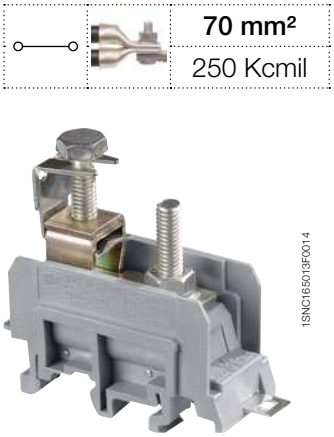

70 mm²
250 Kcmil

1SNC165013F0014

M120/35.AF

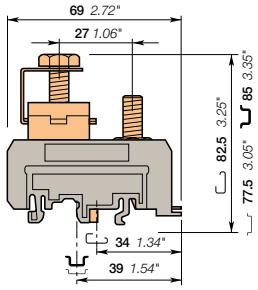

35 mm 1.380 in spacing

Description

- Compact one stud / one clamp terminal block,
- Lug mounting in accordance with NF C 20-130 and DIN 46234,
- Various marking options,
- Rail or base mounting.

Ordering details

Description		Color	Type	Part Number		Pkg pce	Weight (1 pce) g
Feed-through	1 stud M8 + 1 screw clamp	Grey	M120/35.AF	1SNA115145R1400		10	160.00

Main technical data

		NFC	DIN	UL	CSA
Lugs	Rigid: Solid/Stranded	6-95 mm²	2.5-70 mm²	2-250 Kcmil	max 000 AWG
	Flexible with insulated ferrule	6-70 mm²	2.5-70 mm²		
	Gauge	C6			

		IEC	DIN	UL	CSA
Screw clamp	Rigid: Solid/Stranded	35-120 mm²	35-120 mm²	2-250 Kcmil	2-000 AWG
	Flexible without ferrule	35-70 mm²	35-70 mm²		
	Gauge				

	IEC	DIN	UL	CSA
Bar				
Rated current	192 A	150 A	255 A	270 A
Rated cross section	70 mm²	50 mm²	250 Kcmil	000 AWG
Rated voltage	1000 V		600 V	600 V
Impulse withstand voltage	8000 V			

Mounting instructions

Rail		G32, TH 35-7.5, TH 35-15
Lugs Tool		Wrench H13 mm
Torque		6-12 N.m 53.1-106.2 lb.in
Tool		
Torque		
Screw clamp Tool		Wrench H13 mm
Torque		7 ± 1 N.m 61.9 ± 8.85 lb.in
Wire stripping length		28 mm 1.102 in

The connecting capacity data for one Rigid: Solid/Stranded, or one Flexible conductor (when applicable) is a mandatory information required by IEC, UL and CSA standards (Copper conductors). All other data are provided as supplementary information only. For more details, please consult our CB, UL or CSA certificates and technical datasheet available on http://www.TE.com

RoHS RoHS · USR · CSA · Gost R

Accessories

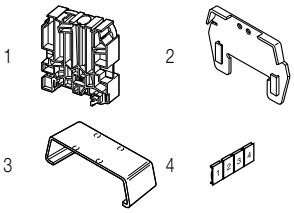

	Description			Color	Type	Part Number		Pkg pce	Weight (1 pce) g
1	**End stops**	9.1 mm	0.358 in	Grey	BAMH	1SNA114836R0000		50	13.00
		10 mm	0.394 in	Dark grey	BAZH1	1SNK900102R0000		20	24.00
2	**Circuit separators**	Circuit separators		Grey	ECP35	1SNA113691R1600		10	10.00
3	**Protecting covers**			Transparent	CPP351	1SNA168206R1700		5	8.00
		marked cut: 2 blocks			CPP352	1SNA168205R1600		5	20.00
		marked cut: 3 blocks			CPP353	1SNA163418R2600		5	20.00
4	**Terminal block markers**	Label holder		Grey	PEP	1SNA113762R2400		50	0.46
		Terminal block markers		White	RC610	1SNA233000R0100		1	7.50

Complete list of accessories is indicated in the terminal block datasheet.
Some accessories such as jumper bars may modify the terminal block's ratings: complete information in the accessories catalogue pages.

Technical data valid for copper conductors only.

M300/42.AF stud terminal blocks
Feed-through - 42 mm 1.653 in spacing

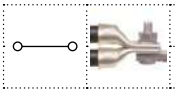

120 mm²
500 Kcmil

1SNC165013F0014

M300/42.AF

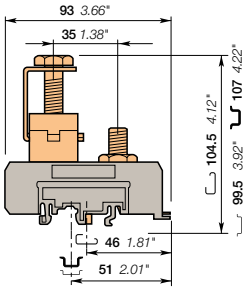

42 mm 1.653 in spacing

Description

- Compact one stud / one clamp terminal block,
- Lug mounting in accordance with NF C 20-130 and DIN 46234,
- Various marking options,
- Rail or base mounting.

Ordering details

Description		Color	Type	Part Number		Pkg pce	Weight (1 pce) g
Feed-through	1 stud M10 + 1 screw clamp	Grey	M300/42.AF	1SNA115148R2700		10	340.00

Main technical data

		NFC	DIN	UL	CSA
Lugs	Rigid: Solid/Stranded	50-150 mm²	6-150 mm²	0-500 Kcmil	0-500 Kcmil
	Flexible with insulated ferrule	50-120 mm²	6-120 mm²		
	Gauge	C8			

		IEC	DIN	UL	CSA
Screw clamp	Rigid: Solid/Stranded	70-300 mm²	70-300 mm²	0-500 Kcmil	0-500 Kcmil
	Flexible without ferrule	70-120 mm²	70-120 mm²		
	Gauge				

	IEC	DIN	UL	CSA
Bar				
Rated current	269 A	269 A	380 A	550 A
Rated cross section	120 mm²	120 mm²	500 Kcmil	500 Kcmil
Rated voltage	1000 V		600 V	600 V
Impulse withstand voltage	8000 V			

Mounting instructions

Rail		G32, TH 35-7.5, TH 35-15
Lugs Tool		Wrench H16 mm
Torque		10-20 N.m 88.5-177 lb.in
Jumper screw Tool		
Torque		
Screw clamp Tool		Wrench H16 mm
Torque		11 ± 1 N.m 97.36 ± 8.85 lb.in
Wire stripping length		40 mm 1.575 in

The connecting capacity data for one Rigid: Solid/Stranded, or one Flexible conductor (when applicable) is a mandatory information required by IEC, UL and CSA standards (Copper conductors). All other data are provided as supplementary information only. For more details, please consult our CB, UL or CSA certificates and technical datasheet available on http://www.TE.com

RoHS RoHS · USR · CSA · Gost R

Accessories

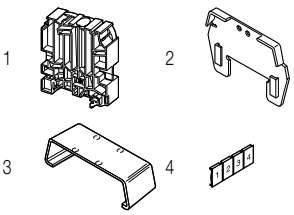

	Description			Color	Type	Part Number		Pkg pce	Weight (1 pce) g
1	**End stops**	9.1 mm	0.358 in	Grey	BAMH	1SNA114836R0000		50	13.00
		10 mm	0.394 in	Dark grey	BAZH1	1SNK900102R0000		20	24.00
2	**Circuit separators**	Circuit separators		Grey	ECP42	1SNA113692R1700		10	20.00
3	**Protecting covers**			Transparent	CPP421	1SNA168208R2100		5	13.00
		marked cut: 2 blocks			CPP422	1SNA168207R1000		5	30.00
		marked cut: 3 blocks			CPP423	1SNA163424R1400		5	40.00
4	**Terminal block markers**	Label holder		Grey	PEP	1SNA113762R2400		50	0.46
		Blank card		White	RC610	1SNA233000R0100		1	7.50

Complete list of accessories is indicated in the terminal block datasheet.
Some accessories such as jumper bars may modify the terminal block's ratings: complete information in the accessories catalogue pages.

Technical data valid for copper conductors only.

1SNC165026S0201 - Rev. B

M35/26.F stud terminal blocks

Feed-through - 26 mm 1.024 in spacing

25 mm²
2 AWG

M35/26.F

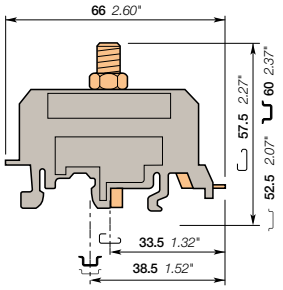

26 mm 1.024 in spacing

Description

- Compact one stud terminal block,
- Lug mounting in accordance with NF C 20-130 and DIN 46234,
- Various marking options,
- Rail or base mounting.

Ordering details

Description		Color	Type	Part Number		Pkg pce	Weight (1 pce) g
Feed-through	1 stud M6	Grey	M35/26.F	1SNA115141R1000		10	40.00

Main technical data

		NFC	DIN	UL	CSA
Lugs	Rigid: Solid/Stranded	4-35 mm²	2.5-50 mm²	10-2 AWG	max 4 AWG
	Flexible with insulated ferrule	4-25 mm²	2.5-25 mm²		
	Gauge	C3			

		IEC	DIN	UL	CSA
Screw clamp	Rigid: Solid/Stranded				
	Flexible without ferrule				
	Gauge				

	IEC	DIN	UL	CSA
Bar				
Rated current	101 A	125 A	115 A	125 A
Rated cross section	25 mm²	35 mm²	2 AWG	4 AWG
Rated voltage	1000 V		600 V	600 V
Impulse withstand voltage	8000 V			

Mounting instructions

Rail		G32, TH 35-7.5, TH 35-15
Lugs Tool		Wrench H10 mm
Torque		4.5-9 N.m 39.8-79.6 lb.in
Jumper screw Tool		
Torque		
Screw clamp Tool		
Torque		
Wire stripping length		

The connecting capacity data for one Rigid: Solid/Stranded, or one Flexible conductor (when applicable) is a mandatory information required by IEC, UL and CSA standards (Copper conductors). All other data are provided as supplementary information only. For more details, please consult our CB, UL or CSA certificates and technical datasheet available on http://www.TE.com

RoHS USR CSA Gost R

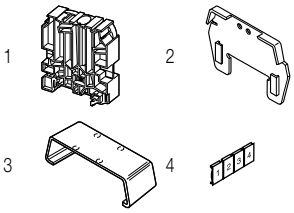

Accessories

	Description			Color	Type	Part Number		Pkg pce	Weight (1 pce) g
1	**End stops**	9.1 mm	0.358 in	Grey	BAMH	1SNA114836R0000		50	13.00
		10 mm	0.394 in	Dark grey	BAZH1	1SNK900102R0000		20	24.00
2	**Circuit separators**	Circuit separators		Grey	ECP26	1SNA113689R2400		10	6.40
3	**Protecting covers**			Transparent	CPP261	1SNA168202R1300		5	5.00
		marked cut: 2 blocks			CPP262	1SNA168201R1200		5	10.00
		marked cut: 3 blocks			CPP263	1SNA163403R2000		5	17.00
4	**Terminal block markers**	Label holder		Grey	PEP	1SNA113762R2400		50	0.46
		Terminal block markers		White	RC610	1SNA233000R0100		1	7.50

Complete list of accessories is indicated in the terminal block datasheet.
Some accessories such as jumper bars may modify the terminal block's ratings: complete information in the accessories catalogue pages.

Technical data valid for copper conductors only.

1SNC165015S0201 - Rev. B

M70/31.F stud terminal blocks
Feed-through - 31 mm 1.220 in spacing

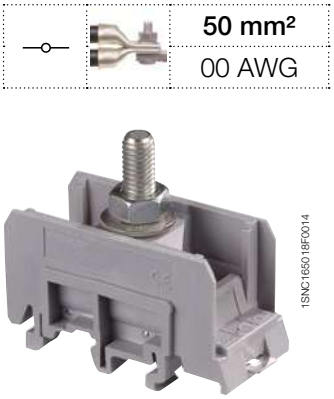

50 mm²	
00 AWG	

M70/31.F

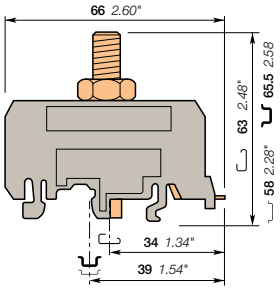

31 mm 1.220 in spacing

Description

- Compact one stud terminal block,
- Lug mounting in accordance with NF C 20-130 and DIN 46234,
- Various marking options,
- Rail or base mounting.

Ordering details

Description		Color	Type	Part Number		Pkg pce	Weight (1 pce) g
Feed-through	1 stud M8	Grey	M70/31.F	1SNA115144R1300		10	60.00

Main technical data

		NFC	DIN	UL	CSA
Lugs	Rigid: Solid/Stranded	6-70 mm²	2.5-70 mm²	4-00 AWG	max 0 AWG
	Flexible with insulated ferrule	6-50 mm²	2.5-50 mm²		
	Gauge	C5			

		IEC	DIN	UL	CSA
Screw clamp	Rigid: Solid/Stranded				
	Flexible without ferrule				
	Gauge				

	IEC	DIN	UL	CSA
Bar				
Rated current	150 A	150 A	175 A	200 A
Rated cross section	50 mm²	50 mm²	00 AWG	0 AWG
Rated voltage	1000 V		600 V	600 V
Impulse withstand voltage	8000 V			

Mounting instructions

Rail	G32, TH 35-7.5, TH 35-15
Lugs Tool	Wrench H13 mm
Torque	6-12 N.m 53.1-106.2 lb.in
Jumper screw Tool	
Torque	
Screw clamp Tool	
Torque	
Wire stripping length	

The connecting capacity data for one Rigid: Solid/Stranded, or one Flexible conductor (when applicable) is a mandatory information required by IEC, UL and CSA standards (Copper conductors). All other data are provided as supplementary information only. For more details, please consult our CB, UL or CSA certificates and technical datasheet available on http://www.TE.com

RoHS RoHS USR CSA Gost R

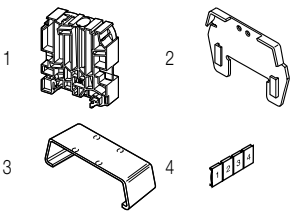

Accessories

	Description			Color	Type	Part Number		Pkg pce	Weight (1 pce) g
1	End stops	9.1 mm	0.358 in	Grey	BAMH	1SNA114836R0000		50	13.00
		10 mm	0.394 in	Dark grey	BAZH1	1SNK900102R0000		20	24.00
2	Circuit separators	Circuit separators		Grey	ECP31	1SNA113690R2100		10	6.70
3	Protecting covers			Transparent	CPP311	1SNA168204R1500		5	7.00
		marked cut: 2 blocks			CPP312	1SNA168203R1400		5	14.00
		marked cut: 3 blocks			CPP313	1SNA163409R0600		5	23.00
4	Terminal block markers	Label holder		Grey	PEP	1SNA113762R2400		50	0.46
		Terminal block markers		White	RC610	1SNA233000R0100		1	7.50

Complete list of accessories is indicated in the terminal block datasheet.
Some accessories such as jumper bars may modify the terminal block's ratings: complete information in the accessories catalogue pages.

Technical data valid for copper conductors only.

M120/35.F stud terminal blocks

Feed-through - 35 mm 1.380 in spacing

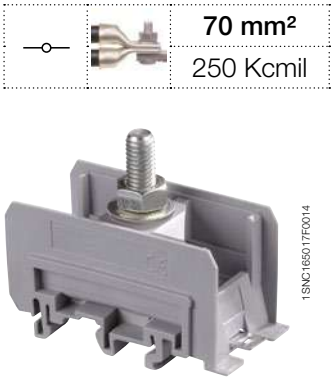

70 mm²
250 Kcmil

M120/35.F

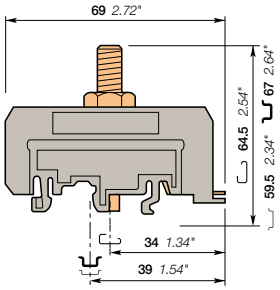

35 mm 1.380 in spacing

Description

- Compact one stud terminal block,
- Lug mounting in accordance with NF C 20-130 and DIN 46234,
- Various marking options,
- Rail or base mounting.

Ordering details

Description		Color	Type	Part Number		Pkg pce	Weight (1 pce) g
Feed-through	1 stud M8	Grey	M120/35.F	1SNA115147R1600		10	61.00

Main technical data

		NFC	DIN	UL	CSA
Lugs	Rigid: Solid/Stranded	6-95 mm²	2.5-70 mm²	2-250 Kcmil	max 000 AWG
	Flexible with insulated ferrule	6-70 mm²	2.5-70 mm²		
	Gauge	C6			

		IEC	DIN	UL	CSA
Screw clamp	Rigid: Solid/Stranded				
	Flexible without ferrule				
	Gauge				

	IEC	DIN	UL	CSA
Bar				
Rated current	192 A	150 A	255 A	270 A
Rated cross section	70 mm²	50 mm²	250 Kcmil	000 AWG
Rated voltage	1000 V		600 V	600 V
Impulse withstand voltage	8000 V			

Mounting instructions

Rail		G32, TH 35-7.5, TH 35-15
Lugs Tool		Wrench H13 mm
Torque		6-12 N.m 53.1-106.2 lb.in
Jumper screw Tool		
Torque		
Screw clamp Tool		
Torque		
Wire stripping length		

The connecting capacity data for one Rigid: Solid/Stranded, or one Flexible conductor (when applicable) is a mandatory information required by IEC, UL and CSA standards (Copper conductors). All other data are provided as supplementary information only. For more details, please consult our CB, UL or CSA certificates and technical datasheet available on http://www.TE.com

RoHS RoHS · USR · CSA · Gost R

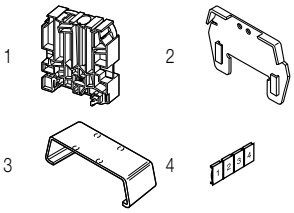

Accessories

	Description			Color	Type	Part Number		Pkg pce	Weight (1 pce) g
1	**End stops**	9.1 mm	0.358 in	Grey	BAMH	1SNA114836R0000		50	13.00
		10 mm	0.394 in	Dark grey	BAZH1	1SNK900102R0000		20	24.00
2	**Circuit separators**	Circuit separators		Grey	ECP35	1SNA113691R1600		10	10.00
3	**Protecting covers**			Transparent	CPP351	1SNA168206R1700		5	8.00
		marked cut: 2 blocks			CPP352	1SNA168205R1600		5	20.00
		marked cut: 3 blocks			CPP353	1SNA163418R2600		5	20.00
4	**Terminal block markers**	Label holder		Grey	PEP	1SNA113762R2400		50	0.46
		Terminal block markers		White	RC610	1SNA233000R0100		1	7.50

Complete list of accessories is indicated in the terminal block datasheet.
Some accessories such as jumper bars may modify the terminal block's ratings: complete information in the accessories catalogue pages.

Technical data valid for copper conductors only.

1SNC165017S0201 - Rev. B

M300/42.F stud terminal blocks
Feed-through - 42 mm 1.653 in spacing

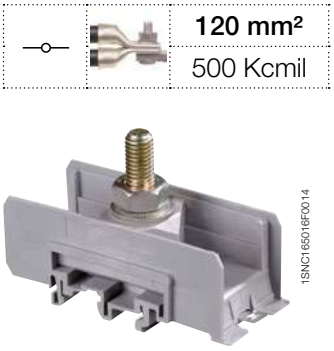

M300/42.F

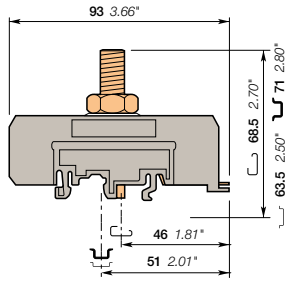

42 mm 1.653 in spacing

	120 mm²
	500 Kcmil

Description

- Compact one stud terminal block,
- Lug mounting in accordance with NF C 20-130 and DIN 46234,
- Various marking options,
- Rail or base mounting.

Ordering details

Description		Color	Type	Part Number		Pkg pce	Weight (1 pce) g
Feed-through	1 stud M10	Grey	M300/42.F	1SNA115150R2500		10	100.00

Main technical data

		NFC	DIN	UL	CSA
Lugs	Rigid: Solid/Stranded	50-150 mm²	6-150 mm²	0-500 Kcmil	max 500 Kcmil
	Flexible with insulated ferrule	50-120 mm²	6-120 mm²		
	Gauge	C8			

		IEC	DIN	UL	CSA
Screw clamp	Rigid: Solid/Stranded				
	Flexible without ferrule				
	Gauge				

	IEC	DIN	UL	CSA
Bar				
Rated current	269 A	269 A	230 A	550 A
Rated cross section	120 mm²	120 mm²	500 Kcmil	500 Kcmil
Rated voltage	1000 V		600 V	600 V
Impulse withstand voltage	8000 V			

Mounting instructions

Rail		G32, TH 35-7.5, TH 35-15
Lugs Tool		Wrench H16 mm
Torque		10-20 N.m 88.5-177 lb.in
Jumper screw Tool		
Torque		
Screw clamp Tool		
Torque		
Wire stripping length		

The connecting capacity data for one Rigid: Solid/Stranded, or one Flexible conductor (when applicable) is a mandatory information required by IEC, UL and CSA standards (Copper conductors). All other data are provided as supplementary information only. For more details, please consult our CB, UL or CSA certificates and technical datasheet available on http://www.TE.com

RoHS CSA Gost R

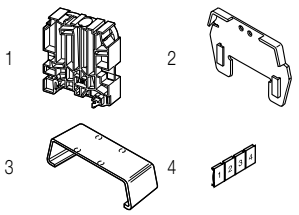

Accessories

	Description			Color	Type	Part Number		Pkg pce	Weight (1 pce) g
1	**End stops**	9.1 mm	0.358 in	Grey	BAMH	1SNA114836R0000		50	13.00
		10 mm	0.394 in	Dark grey	BAZH1	1SNK900102R0000		20	24.00
2	**Circuit separators**	Circuit separators		Grey	ECP42	1SNA113692R1700		10	20.00
3	**Protecting covers**			Transparent	CPP421	1SNA168208R2100		5	13.00
		marked cut: 2 blocks			CPP422	1SNA168207R1000		5	30.00
		marked cut: 3 blocks			CPP423	1SNA163424R1400		5	40.00
4	**Terminal block markers**	Label holder		Grey	PEP	1SNA113762R2400		50	0.46
		Terminal block markers		White	RC610	1SNA233000R0100		1	7.50

Complete list of accessories is indicated in the terminal block datasheet.
Some accessories such as jumper bars may modify the terminal block's ratings: complete information in the accessories catalogue pages.

Technical data valid for copper conductors only.

TE Connectivity's "positive retention" lock foot
Mounting instructions

Mounting
The locking action is automatic on mounting the block on the rail.

Unlocking
- Pull or push on the locking tag, using pliers as follows,
- Blocks mounted on DIN 1 rail: pull on the release tag,
- Blocks mounted on DIN 3 rails: push on the release tag,
- Remove the block from the rail by rotation, using a tube wrench while maintaining the action of the pliers.

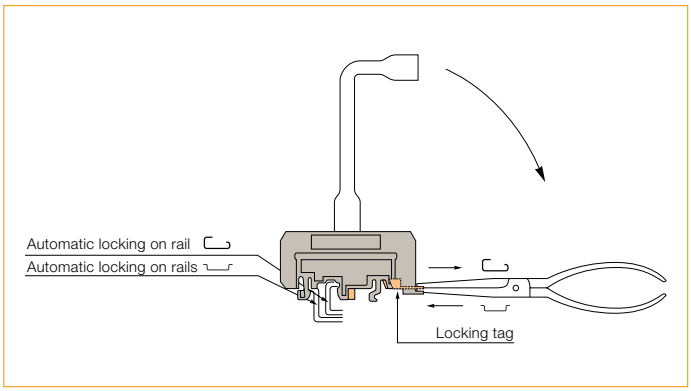

Space requirements of blocks with their partition or protective cover
Partition for TYPE I blocks.

Type	Part Number	Spacing	A	B	C	D	E	F
			Dimensions mm					
ECP26	1SNA113689R2400	26	76	35.5	40.5	67.5	62.5	70
ECP31	1SNA113690R2100	31	84	39.5	44.5	72.5	67.5	75
ECP35	1SNA113691R1600	35	90	42.5	47.5	82.5	77.5	85
ECP42	1SNA113692R1700	42	116	55.5	60.5	104.5	99.5	107

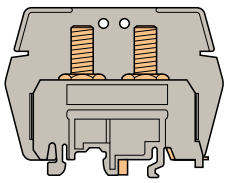

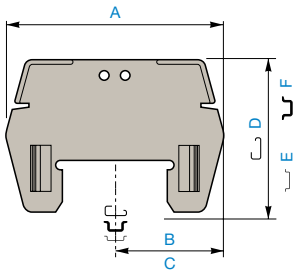

Marker-holder for power blocks
This marker-holder snaps on the ECP and ECS power blocks partitions, as well as on the type I power blocks compression clamps.

They can also be mounted on the SCF separator end sections.

Type	Part Number
PEP	1SNA113762R2400

This marker-holder can receive:
1 label RC610

Adhesive marker
High performance adhesive marker for most surface types.
See section on markers.

Type	Part Number
RPA	1SNA235463R2300

1SNC165027S0201

1SNC165027S0201

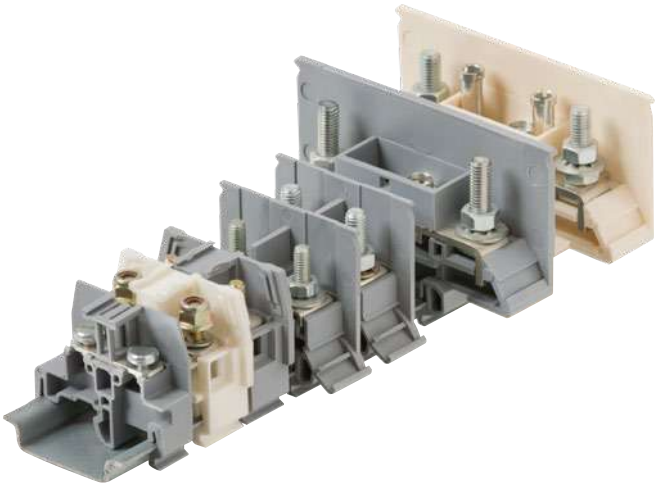

1SNC168014S0201

Dedicated applications terminal blocks
Ring lug technology

Overview			100
Feed-through			
6 mm² / 8 AWG	**M6/9.EE**		101
	M6/12.FF		102
	M6/13.FF		103 to 104
Feed-through			
16 mm²	**165LTTM5TM5**		105
Test disconnect			
16 mm²	**165ETTM5TM5**	With a screwdriver sliding link	106
	165ETTM5TM5-2	With a screwdriver sliding link and test	107

5

1SNC168014S0201

Feed-through

Section				
IEC	UL/CSA			
6 mm²	8 AWG	**M6/9.EE** 9.5 mm 0.374 in	**M6/12.FF** 12.5 mm 0.492 in	**M6/13.FF** 13 mm 0.512 in

Feed-through Test disconnect

Section				
IEC	UL/CSA			
16 mm²		**165LTTM5TM5** 16 mm 0.630 in	**165ETTM5TM5** 16 mm 0.630 in	**165ETTM5TM5-2** 16 mm 0.630 in

1SNC168015S0201

M6/9.EE ring lug terminal blocks

Feed-through - 9.5 mm 0.374 in spacing

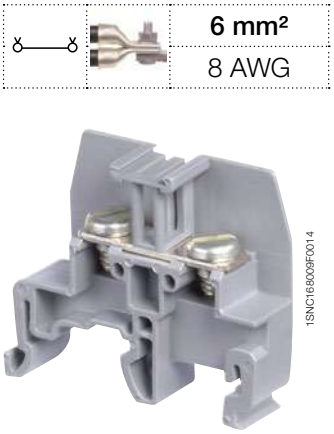

6 mm²	
8 AWG	

1SNC168009F0014

M6/9.EE

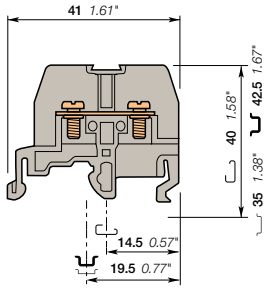

9.5 mm 0.374 in spacing

Description

- Strap screw terminal block for ring lug connection,
- Removable partition for jumpering.

Ordering details

Description		Color	Type	Part Number		Pkg pce	Weight (1 pce) g
Feed-through	With 2 screws CL 6-32 NC - 2A DIA 3.5 mm 0.138 in for lug max width 8.5 mm 0.334 in	Grey	M6/9.EE	1SNA115201R2500		50	7.00

Main technical data

		IEC	UL	CSA
Lugs	Rigid: Solid/Stranded	0.5-6 mm²	22-8 AWG	max 8 AWG
	Flexible with insulated ferrule	0.5-6 mm²		
	Gauge			
Rated current		41 A	40 A	40 A
Rated cross section		6 mm²	22-8 AWG	8 AWG
Rated voltage		800 V	600 V	600 V
Impulse withstand voltage		8 kV		
Protection			NEMA	

Mounting instructions

Rail	G32, TH 35-7.5, TH 35-15
Lugs Tool	Flat screwdriver 6.35 mm 0.250 in
Torque	0.8 - 1 N.m 7.1 - 8.9 lb.in
Wire stripping length	

The connecting capacity data for one Rigid: Solid/Stranded, or one Flexible conductor (when applicable) is a mandatory information required by IEC, UL and CSA standards (Copper conductors). All other data are provided as supplementary information only. For more details, please consult our CB, UL or CSA certificates and technical datasheet available on http://www.TE.com

RoHS USR CSA EAC

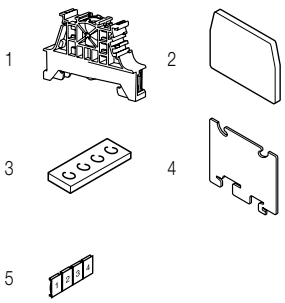

Accessories

	Description			Color	Type	Part Number		Pkg pce	Weight (1 pce) g
1	**End stops**	10 mm	0.394 in	Dark grey	BAM4	1SNK900001R0000		50	14.00
		5.2 mm	0.205 in		BAZ1	1SNK900002R0000		50	5.30
2	**End sections**	3 mm	0.118 in	Grey	FEM9	1SNA113067R1700		1	2.40
3	**Jumper bars**	2 poles	41 A		BJS9.5-2	1SNA173815R1600		10	1.00
		3 poles			BJS9.5-3	1SNA173816R1700		10	1.60
		4 poles			BJS9.5-4	1SNA173817R1000		10	2.20
		10 poles			BJS9.5-10	1SNA173819R2200		10	5.60
4	**Circuit separators**	1 mm	0.039 in	White	SCF9	1SNA103672R0100		20	2.00
5	**Terminal block markers**	Blank card		White	RCT810	1SNA236500R0600		1	7.60

Complete list of accessories is indicated in the terminal block datasheet.
Some accessories such as jumper bars may modify the terminal block's ratings: complete information in the accessories catalogue pages.

Technical data valid for copper conductors only.

1SNC168001S0201 - Rev. B

M6/12.FF ring lug terminal blocks

Feed-through - 12.5 mm 0.492 in spacing

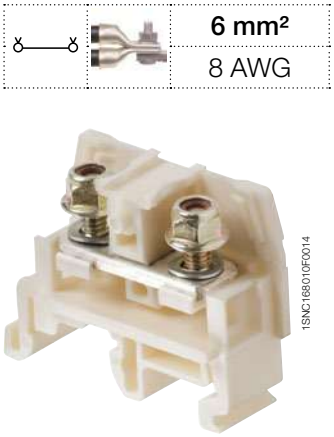

M6/12.FF

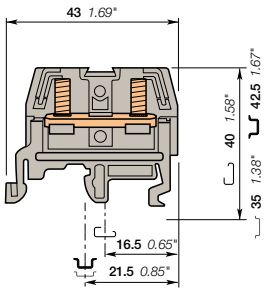

12.5 mm 0.492 in spacing

	6 mm²
	8 AWG

Description

- Terminal block for high vibration environment,
- Stud connection,
- Removable partition for jumpering.

Ordering details

Description		Color	Type	Part Number		Pkg pce	Weight (1 pce) g
Feed-through	With nuts, with 2 studs 8-32 UNC - 2A DIA 4.16 mm 0.164 in, height 9 mm 0.354 in, for lug max width 9.5 mm 0.374 in	White Grey	M6/12.FF M6/12.FF	1SNA115263R2200 1SNA400753R1000		50 50	20.00 20.00
	Without nuts, with 2 studs 8-32 UNC - 2A DIA 4.16 mm 0.164 in, height 9 mm 0.354 in, for lug max width 9.5 mm 0.374 in	Grey White	M6/12.FF M6/12.FF1	1SNA115511R0300 1SNA115262R2100		50 50	13.00 13.00

Main technical data

		IEC		UL	CSA
Lugs	Rigid: Solid/Stranded	max 6 mm²		8 AWG	18-10 AWG
	Flexible with insulated ferrule				
	Gauge				
Rated current		41 A		40 A	25 A
Rated cross section		6 mm²		8 AWG	10 AWG
Rated voltage		800 V		600 V	600 V
Impulse withstand voltage		8 kV			
Protection				NEMA	

Mounting instructions

Rail		G32, TH 35-7.5, TH 35-15
Lugs Tool		Wrench
Torque		1.8 N.m 15.65 lb.in
Wire stripping length		

The connecting capacity data for one Rigid: Solid/Stranded, or one Flexible conductor (when applicable) is a mandatory information required by IEC, UL and CSA standards (Copper conductors). All other data are provided as supplementary information only. For more details, please consult our CB, UL or CSA certificates and technical datasheet available on http://www.TE.com

RoHS USR cCSAus EAC

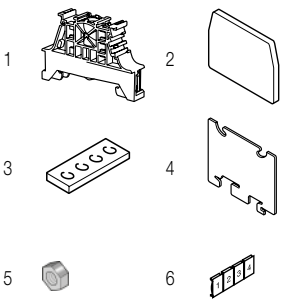

Accessories

	Description			Color	Type	Part Number		Pkg pce	Weight (1 pce) g
1	**End stops**	10 mm	0.394 in	Dark grey	BAM4	1SNK900001R0000		50	14.00
		5.2 mm	0.205 in		BAZ1	1SNK900002R0000		50	5.30
2	**End sections**	3 mm	0.118 in	Grey	FEM12F	1SNA116713R1600		25	1.25
3	**Jumper bars**	2 poles	41 A		BJS12.5-2	1SNA174393R2000		10	1.70
		3 poles			BJS12.5-3	1SNA174394R2100		10	2.70
		5 poles			BJS12.5-5	1SNA174395R2200		10	4.80
		10 poles			BJS12.5-10	1SNA174396R2300		10	9.90
4	**Circuit separators**	1 mm	0.039 in	White	SCF9	1SNA103672R0100		20	2.00
5	**Nuts**				ECR-3	1SNA175263T0600		100	1.00
6	**Terminal block markers**	Blank card		White	RCT810	1SNA236500R0600		1	7.60

Complete list of accessories is indicated in the terminal block datasheet.
Some accessories such as jumper bars may modify the terminal block's ratings: complete information in the accessories catalogue pages.

Technical data valid for copper conductors only.

1SNC168002S0201 - Rev. B

M6/13.FF ring lug terminal blocks
Feed-through - 13 mm 0.512 in spacing

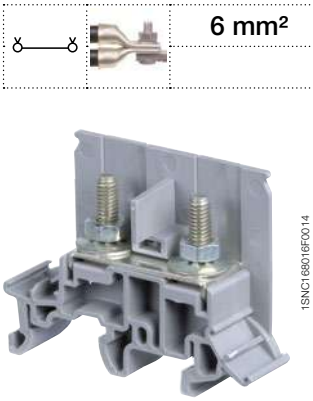

M6/13.FF

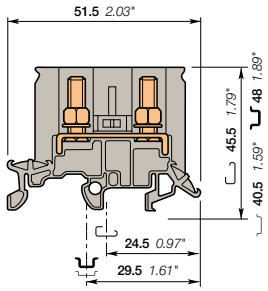

13 mm 0.512 in spacing

6 mm²

Description

- Two stud terminal block for ring lug connection,
- Removable partition for jumpering.

Ordering details

Description		Color	Type	Part Number		Pkg pce	Weight (1 pce) g
Feed-through	With 2 studs M4 x 16	Grey	M6/13.FF	1SNA115626R1600		25	16.00

Main technical data

		IEC		UL	CSA
Lugs	Rigid: Solid/Stranded	max 6 mm²		10 AWG	18-10 AWG
	Flexible with insulated ferrule	max 6 mm²			
	Gauge				
Rated current		41 A		35 A	25 A
Rated cross section		6 mm²		10 AWG	18-10 AWG
Rated voltage		800 V		600 V	600 V
Impulse withstand voltage		8 kV			
Protection				NEMA	

Mounting instructions

Rail		G32, TH 35-7.5, TH 35-15
Lugs Tool		Flat screwdriver Ø 6.35 mm Ø 0.250 in
Torque		1.2 - 2.5 N.m 10.6 - 21.8 lb.in
Wire stripping length		

The connecting capacity data for one Rigid: Solid/Stranded, or one Flexible conductor (when applicable) is a mandatory information required by IEC, UL and CSA standards (Copper conductors). All other data are provided as supplementary information only. For more details, please consult our CB, UL or CSA certificates and technical datasheet available on http://www.TE.com

RoHS RoHS | USR | cCSAus | EAC

Accessories

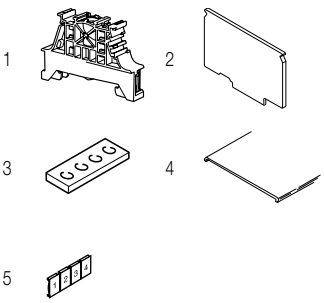

	Description			Color	Type	Part Number		Pkg pce	Weight (1 pce) g
1	**End stops**	10 mm	0.394 in	Dark grey	BAM4	1SNK900001R0000		50	14.00
		5.2 mm	0.205 in		BAZ1	1SNK900002R0000		50	5.30
2	**End sections**	1 mm	0.039 in	Grey	FEM13F	1SNA116977R1700		25	1.40
3	**Jumper bars**	10 poles	125 A		BJS13-10	1SNA167224R2700		10	10.00
4	**Protecting covers**				CPE43	1SNA280092R2500		2	
5	**Terminal block markers**	Blank card		White	RC1010	1SNA238000R1600		1	1.30

Complete list of accessories is indicated in the terminal block datasheet.
Some accessories such as jumper bars may modify the terminal block's ratings: complete information in the accessories catalogue pages.

Technical data valid for copper conductors only.

5

1SNC168003S0201 - Rev. B

M6/13.FF ring lug terminal blocks
Feed-through - 13 mm 0.512 in spacing

M6/13.FF

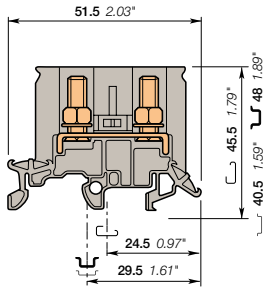

13 mm 0.512 in spacing

Description

- Two stud terminal block for ring lug connection,
- Removable partition for jumpering.

Ordering details

Description		Color	Type	Part Number		Pkg pce	Weight (1 pce) g
Feed-through	With 2 studs M5 x 16	Grey	M6/13.FF.1	1SNA115627R1700		25	16.00

Main technical data

		IEC		UL	CSA
Lugs	Rigid: Solid/Stranded	max 10 mm²		8 AWG	18-10 AWG
	Flexible with insulated ferrule	max 10 mm²			
	Gauge				
Rated current		57 A		50 A	25 A
Rated cross section		10 mm²		8 AWG	18-10 AWG
Rated voltage		800 V		600 V	600 V
Impulse withstand voltage		8 kV			
Protection				NEMA	

Mounting instructions

Rail		G32, TH 35-7.5, TH 35-15
Lugs Tool		Wrench H8 mm 0.310 in
Torque		2 - 4 N.m 17.7 - 35.4 lb.in
Wire stripping length		

The connecting capacity data for one Rigid: Solid/Stranded, or one Flexible conductor (when applicable) is a mandatory information required by IEC, UL and CSA standards (Copper conductors). All other data are provided as supplementary information only. For more details, please consult our CB, UL or CSA certificates and technical datasheet available on http://www.TE.com

RoHS USR cCSAus EAC

Accessories

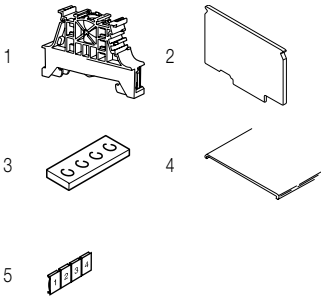

	Description			Color	Type	Part Number		Pkg pce	Weight (1 pce) g
1	**End stops**	10 mm	0.394 in	Dark grey	BAM4	1SNK900001R0000		50	14.00
		5.2 mm	0.205 in		BAZ1	1SNK900002R0000		50	5.30
2	**End sections**	1 mm	0.039 in	Grey	FEM13F	1SNA116977R1700		25	1.40
3	**Jumper bars**	13 mm	125 A		BJS13-10	1SNA167224R2700		10	10.00
4	**Protecting covers**				CPE43	1SNA280092R2500		2	
5	**Terminal block markers**	Blank card		White	RC1010	1SNA238000R1600		1	1.30

Complete list of accessories is indicated in the terminal block datasheet.
Some accessories such as jumper bars may modify the terminal block's ratings: complete information in the accessories catalogue pages.

Technical data valid for copper conductors only.

1SNC168004S0201 - Rev. B

165LTTM5TM5 ring lug terminal blocks
Feed-through - 16 mm 0.630 in spacing

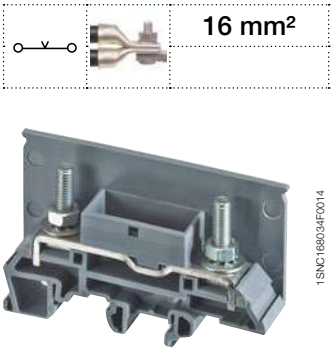

165LTTM5TM5

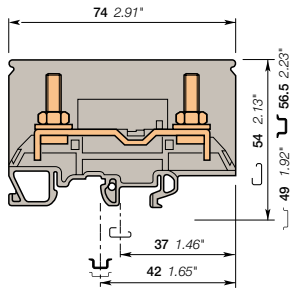

16 mm 0.630 in spacing

Description

- Two stud terminal block for ring lug connection,
- Profile aligned with disconnect terminal blocks type 165ETTM5TM5.

Ordering details

Description		Color	Type	Part Number		Pkg pce	Weight (1 pce) g
Feed-through	WIth 2 studs M5 x 16 and partition	Grey	165LTTM5TM5	1SNA216110R2200		25	40.00

Main technical data

		IEC		UL	CSA
Lugs	Rigid: Solid/Stranded	16 mm²		6 AWG	
	Flexible with insulated ferrule	16 mm²			
	Gauge				
Rated current		76 A		65 A	
Rated cross section		16 mm²		6 AWG	
Rated voltage		800 V		600 V	
Impulse withstand voltage		8 kV			
Protection				NEMA	

Mounting instructions

Rail		G32, TH 35-7.5, TH 35-15
Lugs Tool		Wrench H8 mm 0.310 in
Torque		2 - 4 N.m 17.7 - 35.4 lb.in
Wire stripping length		

The connecting capacity data for one Rigid: Solid/Stranded, or one Flexible conductor (when applicable) is a mandatory information required by IEC, UL and CSA standards (Copper conductors). All other data are provided as supplementary information only. For more details, please consult our CB, UL or CSA certificates and technical datasheet available on http://www.TE.com

RoHS RoHS USR EAC

Accessories

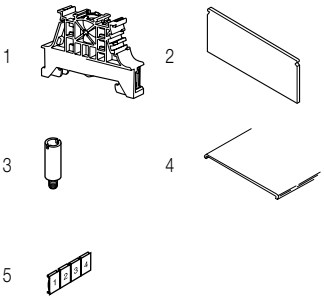

	Description			Color	Type	Part Number		Pkg pce	Weight (1 pce) g
1	**End stops**	10 mm	0.079 in	Dark grey	BAM4	1SNK900001R0000		50	14.00
		5.2 mm	0.205 in		BAZ1	1SNK900002R0000		50	5.30
2	**End sections**	2 mm	0.079 in	Grey	FEET80	1SNA216114R1200		10	7.20
3	**Test sockets**	DIA 4 mm	0.157 in		AL4-M3-R1	1SNA206722R0200		50	1.62
4	**Protecting covers**	Length 2 m	78 in		CPE80	1SNA280093R2600		1	103.00
5	**Terminal block markers**	Blank card			REH3	1SNA163155R2600		1	20.00

Complete list of accessories is indicated in the terminal block datasheet.
Some accessories such as jumper bars may modify the terminal block's ratings: complete information in the accessories catalogue pages.

Technical data valid for copper conductors only.

1SNC168007S0201 - Rev. B

165ETTM5TM5 ring lug terminal blocks

Test disconnect with a screwdriver sliding link - 16 mm 0.630 in spacing

16 mm²

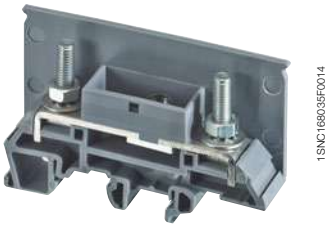

1SNC168035F0014

165ETTM5TM5

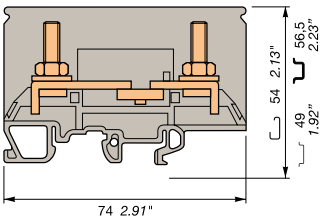

16 mm 0.630 in spacing

Description

- Secure your disconnect operations with the disconnect sliding link operated with a screwdriver,
- Two stud terminal block for ring lug connection,
- Profile aligned with terminal blocks type 165LTTM5TM5.

Ordering details

Description		Color	Type	Part Number		Pkg pce	Weight (1 pce) g
Disconnect	With 2 studs M5 x 18 fitted with 1 nut + 1 lock washer	Grey	165ETTM5TM5	1SNA216112R1000		25	22.00

Main technical data

		IEC	UL	CSA
Lugs	Rigid: Solid/Stranded	16 mm²		
	Flexible with insulated ferrule	16 mm²		
	Gauge			
Rated current		76 A		
Rated cross section		16 mm²		
Rated voltage		800 V		
Impulse withstand voltage		8 kV		
Protection			NEMA	

Mounting instructions

Rail	G32, TH 35-7.5, TH 35-15
Lugs Tool	Wrench H8 mm 0.310 in
Torque	2 - 4 N.m 17.7 - 35.4 lb.in
Disconnect device Tool	Flat screwdriver Ø 4 mm Ø 0.157 in
Torque	0.5 - 0.8 N.m 4.4 - 7.1 lb.in
Wire stripping length	

The connecting capacity data for one Rigid: Solid/Stranded, or one Flexible conductor (when applicable) is a mandatory information required by IEC, UL and CSA standards (Copper conductors). All other data are provided as supplementary information only. For more details, please consult our CB, UL or CSA certificates and technical datasheet available on http://www.TE.com

RoHS RoHS EAC EAC

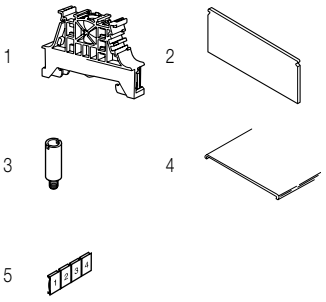

Accessories

	Description			Color	Type	Part Number		Pkg pce	Weight (1 pce) g
1	**End stops**	10 mm	0.079 in	Dark grey	BAM4	1SNK900001R0000		50	14.00
		5.2 mm	0.205 in		BAZ1	1SNK900002R0000		50	5.30
2	**End sections**	2 mm	0.079 in	Grey	FEET80	1SNA216114R1200		10	7.20
3	**Test sockets**	DIA 4 mm 0.157 in			AL4-M3-R1	1SNA206722R0200		50	1.62
4	**Protecting covers**	Length 2 m 78 in			CPE80	1SNA280093R2600		1	103.00
5	**Terminal block markers**	Blank card			REH3	1SNA163155R2600		1	20.00

Complete list of accessories is indicated in the terminal block datasheet.
Some accessories such as jumper bars may modify the terminal block's ratings: complete information in the accessories catalogue pages.

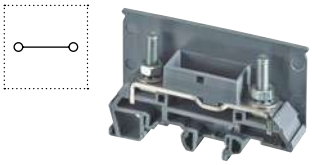

Feed-through wire lug terminal blocks

Description	Color	Type	Part Number		Pkg pce	Weight (1 pce) g
Feed-through	Grey	165LTTM5TM5	1SNA216110R2200		25	40.00

Technical data valid for copper conductors only.

1SNC168010S0201 - Rev. B

165ETTM5TM5 ring lug terminal blocks

Test disconnect with a screwdriver sliding link - 16 mm 0.630 in spacing

16 mm²

1SNC168023F0014

165ETTM5TM5

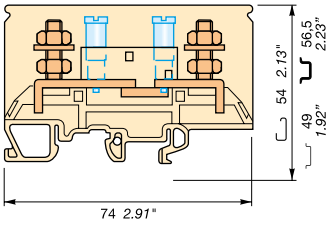

16 mm 0.630 in spacing

Description

- Secure your disconnect operations with the disconnect sliding link operated with a screwdriver,
- Ease your test operations with the 2 independent built-in test sockets compatible with DIA 4 mm 0.157 in test plugs,
- Two stud terminal block for ring lug connection,
- Profile aligned with terminal blocks type 165LTTM5TM5.

Ordering details

Description		Color	Type	Part Number		Pkg pce	Weight (1 pce) g
Disconnect	With 2 studs M5 x 18 fitted with 2 nuts + 1 washer, with test sockets DIA 4 mm 0.157 in	Beige	165ETTM5TM5-2	1SNA296117R1600		25	51.00

Main technical data

		IEC		UL	CSA
Lugs	Rigid: Solid/Stranded	16 mm²			
	Flexible with insulated ferrule	16 mm²			
	Gauge				
Rated current		76 A			
Rated cross section		16 mm²			
Rated voltage		800 V			
Impulse withstand voltage		8 kV			
Protection				NEMA	

Mounting instructions

Rail		G32, TH 35-7.5, TH 35-15
Lugs Tool		Wrench H8 mm 0.310 in
Torque		2 - 4 N.m 17.7 - 35.4 lb.in
Disconnect device Tool		Flat screwdriver Ø 4 mm Ø 0.157 in
Torque		0.5 - 0.8 N.m 4.4 - 7.1 lb.in
Wire stripping length		

The connecting capacity data for one Rigid: Solid/Stranded, or one Flexible conductor (when applicable) is a mandatory information required by IEC, UL and CSA standards (Copper conductors). All other data are provided as supplementary information only. For more details, please consult our CB, UL or CSA certificates and technical datasheet available on http://www.TE.com

RoHS RoHS · Gost R

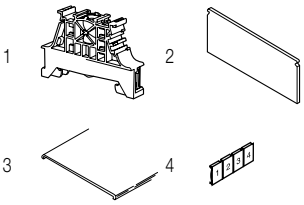

Accessories

	Description			Color	Type	Part Number		Pkg pce	Weight (1 pce) g
1	**End stops**	10 mm	0.079 in	Dark grey	BAM4	1SNK900001R0000		50	14.00
		5.2 mm	0.205 in		BAZ1	1SNK900002R0000		50	5.30
2	**End sections**	2 mm	0.079 in	Beige	FEET80	1SNA296114R1300		10	7.20
3	**Protecting covers**	Length 2 m 78 in			CPE80	1SNA280093R2600		1	103.00
4	**Terminal block markers**	Blank card			REH3	1SNA163155R2600		1	20.00

Complete list of accessories is indicated in the terminal block datasheet.
Some accessories such as jumper bars may modify the terminal block's ratings: complete information in the accessories catalogue pages.

Technical data valid for copper conductors only.

1SNC168012S0201 - Rev. B

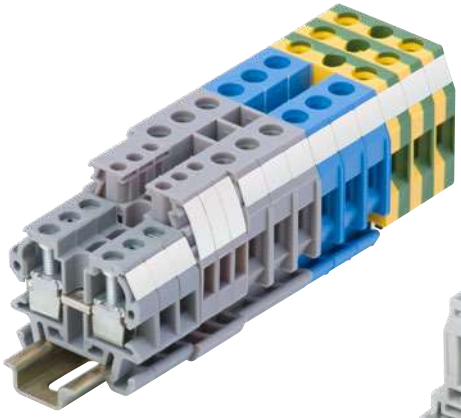

1SNC160099S0201

Overview				110
Screw clamp technology				
Rail TH 35				
Feed-through	4 mm² / 10-12 AWG	**MS4/6**		112
	6 mm² / 8 AWG	**MS6/8**		113
Rail TH 15				
Feed-through	1.5 mm² / 12 AWG	**DR1.5/4**		114
		DR1.5/5		115
	4 mm² / 10-12 AWG	**DR4/6**		117
Ground	4 mm² / 10-12 AWG	**DR4/6.P**		119
Disconnect	2.5 mm² / 12 AWG	**DR2.5/5.S**		120
Fuse	4 mm² / 12 AWG	**DR4/8.SF**		121
Spring clamp technology				
Rail TH 35				
Feed-through	2.5 mm² / 12 AWG	**DS2.5/5.2L**	2 connections	122
		DS2.5/10.4L	4 connections	123
Rail TH 15				
Feed-through	2.5 mm² / 12 AWG	**DR2.5/5.2L**	2 connections	124
		DR2.5/10.4L	4 connections	125
Ground	2.5 mm² / 12 AWG	**DR2.5/10.P.4L**	4 connections	126
Base mounting				
Feed-through	2.5 mm² / 12 AWG	**DB2.5/5.2L**	2 connections with flanges mounting	127
		DH2.5/5.2L	2 connections with snap in foot	128
ADO / screw clamp technology				
Rail TH 35				
Feed-through	1 mm² / 18 AWG	**DS2.5/5.ADO & DSE2.5/5.ADO**		129
	1.5 mm² / 16 AWG	**DS4/6.ADO & DSE4/6.ADO**		130
	2.5 mm² / 14 AWG	**DS4/8.ADO & DSE4/8.ADO**		131
Ground	2.5 mm² / 14 AWG	**DS4/8.P.ADO**		132
Rail TH 15				
Feed-through	1 mm² / 18 AWG	**DR2.5/5.ADO & DRE2.5/5.ADO**		133
	1.5 mm² / 16 AWG	**DR4/6.ADO & DRE4/6.ADO**		134
	2.5 mm² / 14 AWG	**DR4/8.ADO & DRE4/8.ADO**		135
Ground	2.5 mm² / 14 AWG	**DR4/8.P.ADO**		136
Base mounting				
Feed-through	1 mm² / 18 AWG	**DB2.5/5.ADO**	With flanges mounting	137
	1.5 mm² / 16 AWG	**DB4/6.ADO**	With flanges mounting	138
	2.5 mm² / 14 AWG	**DB4/8.ADO**	With flanges mounting	139
	1.5 mm² / 16 AWG	**DH4/6.ADO**	With snap in foot	140
ADO / ADO technology				
Rail TH 35				
Feed-through	1.5 mm² / 16 AWG	**DS1.5/6.ADO & DSE1.5/6.ADO**		141
	2.5 mm² / 14 AWG	**DS2.5/8.ADO & DSE2.5/8.ADO**		142
Ground	2.5 mm² / 14 AWG	**DS2.5/8.P.ADO**		143
Rail TH 15				
Feed-through	1 mm² / 18 AWG	**DR1/5.ADO & DRE1/5.ADO**		144
	1.5 mm² / 16 AWG	**DR1.5/6.ADO & DRE1.5/6.ADO**		145
	2.5 mm² / 14 AWG	**DR2.5/8.ADO & DRE2.5/8.ADO**		146
Ground	2.5 mm² / 14 AWG	**DR2.5/8.P.ADO**		147
Base mounting				
Feed-through	1.5 mm² / 16 AWG	**DB1.5/6.ADO**	With flanges mounting	148
	2.5 mm² / 14 AWG	**DB2.5/8.ADO**	With flanges mounting	149
	1.5 mm² / 16 AWG	**DH1.5/6.ADO**	With snap in foot	150

1SNC160099S0201

Screw clamp technology

Section		Feed-through		Ground	Disconnect	Fuse
IEC	UL/CSA					
1.5 mm²	12 AWG		**DR1.5/4** 4 mm 0.157 in			
1.5 mm²	12 AWG		**DR1.5/5** 5 mm 0.197 in			
2.5 mm²	12 AWG				**DR2.5/5 S** 5.08 mm 0.200 in	
4 mm²	10-12 AWG	**MS4/6** 6 mm 0.236 in	**DR4/6** 6 mm 0.236 in	**DR4/6.P** 6 mm 0.236 in		**DR4/8.SF** 8 mm 0.315 in
6 mm²	8 AWG	**MS6/8** 8 mm 0.315 in				
Rail / mounting		TH 35	TH 15	TH 15	TH 15	TH 15

Spring clamp technology

Section		Feed-through				Ground
IEC	UL/CSA					
2.5 mm²	12 AWG	**DS2.5/5.2L** 5 mm 0.197 in	**DR2.5/5.2L** 5 mm 0.197 in	**DB2.5/5.2L** 5 mm 0.197 in	**DH2.5/5.2L** 5 mm 0.197 in	
2.5 mm²	12 AWG	**DS2.5/10.4L** 10 mm 0.394 in	**DR2.5/10.4L** 10 mm 0.394 in			**DR2.5/10.P.4L** 10 mm 0.394 in
Rail / mounting		TH 35	TH 15	BASE	BASE	TH 15

1SNC160061S0201

ADO / screw clamp technology

Section		Feed-through				Ground	
IEC	UL/CSA						
1 mm²	18 AWG	DS2.5/5.ADO 5 mm 0.197 in	DR2.5/5.ADO 5 mm 0.197 in	DB2.5/5.ADO 5 mm 0.197 in			
1.5 mm²	16 AWG	DS4/6.ADO 6 mm 0.236 in	DR4/6.ADO 6 mm 0.236 in	DB4/6.ADO 6 mm 0.236 in	DH4/6.ADO 6 mm 0.236 in		
2.5 mm²	14 AWG	DS4/8.ADO 8 mm 0.315 in	DR4/8.ADO 8 mm 0.315 in	DB4/8.ADO 8 mm 0.315 in		DS4/8.P.ADO 8 mm 0.315 in	DR4/8.P.ADO 8 mm 0.315 in
Rail / mounting		TH 35	TH 15	BASE	BASE	TH 35	TH 15

ADO / ADO technology

Section		Feed-through				Ground	
IEC	UL/CSA						
1 mm²	18 AWG		DR1/5.ADO 5 mm 0.197 in				
1.5 mm²	16 AWG	DS1.5/6.ADO 6 mm 0.236 in	DR1.5/6.ADO 6 mm 0.236 in	DB1.5/6.ADO 6 mm 0.236 in	DH1.5/6.ADO 6 mm 0.236 in		
2.5 mm²	14 AWG	DS2.5/8.ADO 8 mm 0.315 in	DR2.5/8.ADO 8 mm 0.315 in	DB2.5/8.ADO 8 mm 0.315 in		DS2.5/8.P.ADO 8 mm 0.315 in	DR2.5/8.P.ADO 8 mm 0.315 in
Rail / mounting		TH 35	TH 15	BASE	BASE	TH 35	TH 15

1SNC160061S0201

MS4/6 screw clamp terminal blocks

Miniblocks - 6 mm 0.236 in spacing

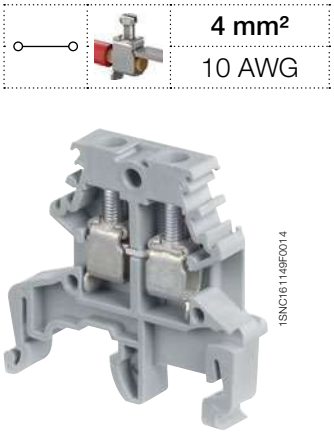

MS4/6

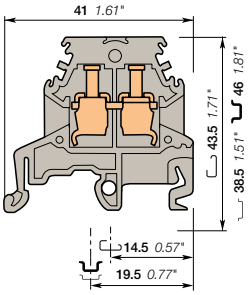

6 mm 0.236 in spacing

4 mm²
10 AWG

Description

- Save space with compact over-all dimensions terminal block,
- Flexibility: snap onto symmetrical and asymmetrical rails.

Ordering details

Description		Color	Type	Part Number		Pkg pce	Weight (1 pce) g
Miniblocks	Feed-through	Grey	MS4/6	1SNA115265R2400		100	6.00
		Yellow	MS4/6	1SNA105265R0300		100	6.00

Main technical data

		IEC	UL	CSA
1 conductor per clamp	Rigid: Solid/Stranded	0.2-4 mm²	22-10 AWG	22-12 AWG
	Flexible without ferrule	0.22-4 mm²		
	Flexible with insulated ferrule			
	Gauge	A4		
Rated current / Rated cross section		32 A / 4 mm²	30 A / 10 AWG	25 A / 12 AWG
Rated short-time withstand current (1s)		480 A		
Rated voltage		630 V	600 V	300 V
Impulse withstand voltage		4000 V		
Protection		IP20	NEMA 1	

Mounting instructions

Rail	G32, TH 35-7.5, TH 35-15
Wire stripping length	10 mm 0.39 in
Tool	Flat screwdriver Ø 4 mm Ø 0.157 in
Torque	0.5 - 0.8 Nm 4.4 - 7.1 lb.in

The connecting capacity data for one Rigid: Solid/Stranded, or one Flexible conductor (when applicable) is a mandatory information required by IEC, UL and CSA standards (Copper conductors). All other data are provided as supplementary information only. For more details, please consult our CB, UL or CSA certificates and technical datasheet available on http://www.TE.com

CE RoHS USR CSA Gost R

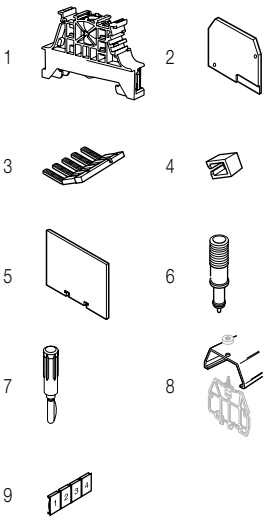

Accessories

	Description			Color	Type	Part Number		Pkg pce	Weight (1 pce) g
1	**End stops**	10 mm	0.394 in	Dark grey	BAM4	1SNK900001R0000		50	14.00
		5.2 mm	0.205 in		BAZ1	1SNK900002R0000		50	5.30
2	**End sections**	3 mm	0.118 in	Grey	FEMS6	1SNA113885R0100		20	1.80
3	**Lateral jumper bars**	2 poles	35 A	Grey	PC6-2	1SNA113546R1400		10	2.00
		3 poles			PC6-3	1SNA116536R0500		10	2.00
		4 poles			PC6-4	1SNA116537R0600		10	1.00
		10 poles			PC6-10	1SNA113548R2600		10	8.00
4	**Insulating tips**				EIP	1SNA113550R2400		10	
5	**Circuit separators**	2.4 mm	0.094 in	Grey	SCFEX3	1SNA103620R0100		10	30.00
		3 mm	0.118 in		SCFCV1-2	1SNA116795R1100		10	8.00
6	**Test adapters**			Yellow	DCJ	1SNA173059R0300		10	2.40
7	**Test plugs**	DIA 2 mm	0.079 in	Black	FC2	1SNA007865R2600		100	
8	**Protecting covers**	Length 1 m	39 in	Transparent	CPV1-2	1SNA176816R1200		1	
9	**Terminal block markers**			White	RC610	1SNA233000R0100		1	7.50

Complete list of accessories is indicated in the terminal block datasheet.
Some accessories such as jumper bars may modify the terminal block's ratings: complete information in the accessories catalogue pages.

Technical data valid for copper conductors only.

1SNC161124S0201 - Rev. A

MS6/8 screw clamp terminal blocks

Miniblocks - 8 mm 0.315 in spacing

6 mm²
8 AWG

MS6/8

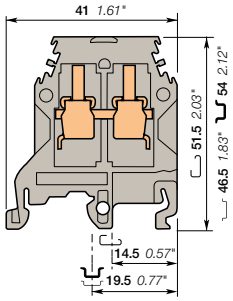

8 mm 0.315 in spacing

Description

- Save space with compact over-all dimensions terminal block,
- Flexibility: snap onto symmetrical and asymmetrical rails.

Ordering details

Description		Color	Type	Part Number		Pkg pce	Weight (1 pce) g
Miniblocks	Feed-through	Grey	MS6/8	1SNA115278R0100		50	12.00

Main technical data

		IEC	UL	CSA
1 conductor per clamp	Rigid: Solid/Stranded	0.5-10 mm²	22-8 AWG	20-8 AWG
	Flexible without ferrule	0.5-6 mm²		
	Flexible with insulated ferrule			
	Gauge	A5		
Rated current / Rated cross section		41 A / 6 mm²	50 A / 8 AWG	40 A / 8 AWG
Rated short-time withstand current (1s)		720 A		
Rated voltage		500 V	300 V	300 V
Impulse withstand voltage		6000 V		
Protection		IP20	NEMA 1	

Mounting instructions

Rail	G32, TH 35-7.5, TH 35-15
Wire stripping length	12 mm 0.47 in
Tool	Flat screwdriver Ø 4 - 5 mm Ø 0.157 - 0.197 in
Torque	0.8 - 1 Nm 7.1 - 8.9 lb.in

The connecting capacity data for one Rigid: Solid/Stranded, or one Flexible conductor (when applicable) is a mandatory information required by IEC, UL and CSA standards (Copper conductors). All other data are provided as supplementary information only. For more details, please consult our CB, UL or CSA certificates and technical datasheet available on http://www.TE.com

CE RoHS USR CSA Gost R

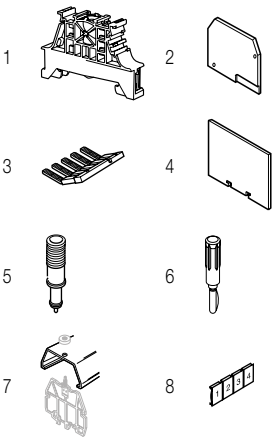

Accessories

	Description			Color	Type	Part Number		Pkg pce	Weight (1 pce) g
1	**End stops**	10 mm	0.394 in	Dark grey	BAM4	1SNK900001R0000		50	14.00
		5.2 mm	0.205 in		BAZ1	1SNK900002R0000		50	5.30
2	**End sections**	3 mm	0.118 in	Grey	FEMS8	1SNA114195R0600		25	1.90
3	**Lateral jumper bars**	2 poles	50 A		PC8-2	1SNA116538R1700		10	3.00
		3 poles			PC8-3	1SNA116539R1000		10	4.00
		4 poles			PC8-4	1SNA116540R2500		10	6.00
		10 poles			PC8-10	1SNA163313R2400		10	14.00
4	**Circuit separators**	2.4 mm	0.094 in	Grey	SCFEX3	1SNA103620R0100		10	30.00
		3 mm	0.118 in		SCFCV1-2	1SNA116795R1100		10	8.00
5	**Test adapters**			Orange	DCO	1SNA173060R0000		10	2.30
6	**Test plugs**	DIA 2 mm 0.079 in		Black	FC2	1SNA007865R2600		100	
7	**Protecting covers**	Length 1 m 39 in		Transparent	CPV1-2	1SNA176816R1200		1	
8	**Terminal block markers**	Blank card		White	RC810	1SNA234000R0200		1	8.20

Complete list of accessories is indicated in the terminal block datasheet.
Some accessories such as jumper bars may modify the terminal block's ratings: complete information in the accessories catalogue pages.

Technical data valid for copper conductors only.

1SNC161139S0201 - Rev. A

DR1.5/4 screw clamp terminal blocks

Miniblocks - 4 mm 0.157 in spacing

1.5 mm²

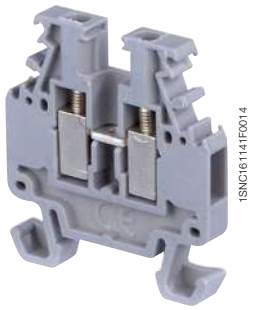

DR1.5/4

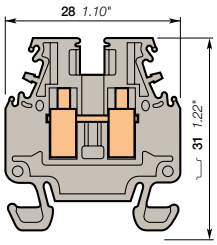

4 mm 0.157 in spacing

Description

Save space with compact over-all dimensions terminal block.

Ordering details

Description		Color	Type	Part Number		Pkg pce	Weight (1 pce) g
Miniblocks	Feed-through	Grey	DR1.5/4	1SNA110106R2500		50	3.00

Main technical data

		IEC	UL	CSA
1 conductor per clamp	Rigid: Solid/Stranded	0.2-1.5 mm²		
	Flexible without ferrule	0.22-1.5 mm²		
	Flexible with insulated ferrule			
	Gauge	A1		
Rated current / Rated cross section		17.5 A / 1.5 mm²		
Rated short-time withstand current (1s)		180 A		
Rated voltage		500 V		
Impulse withstand voltage		6000 V		
Protection		IP20	NEMA 1	

Mounting instructions

Rail	TH 15-5.5
Wire stripping length	7 mm 0.275 in
Tool	Flat screwdriver Ø 2.5 mm Ø 0.98 in
Torque	0.4 - 0.6 Nm 3.5 - 5.3 lb.in

The connecting capacity data for one Rigid: Solid/Stranded, or one Flexible conductor (when applicable) is a mandatory information required by IEC, UL and CSA standards (Copper conductors). All other data are provided as supplementary information only. For more details, please consult our CB, UL or CSA certificates and technical datasheet available on http://www.TE.com

CE RoHS Gost R

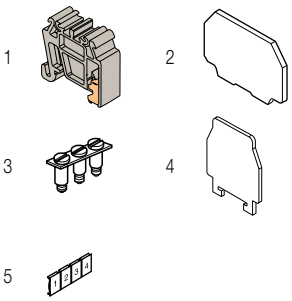

Accessories

	Description			Color	Type	Part Number		Pkg pce	Weight (1 pce) g
1	**End stops**	6.5 mm	0.256 in	Grey	BADRL	1SNA199420R2100		50	2.00
2	**End sections**	1 mm	0.039 in	Grey	FED2-4	1SNA215580R2100		25	1.40
3	**Jumper bars**	2 poles	17.5 A		BJM4	1SNA205735R0600		10	1.00
		3 poles				1SNA205736R0700		10	2.00
		5 poles				1SNA205737R0000		10	3.00
		10 poles				1SNA205738R1100		10	6.00
4	**Circuit separators**	0.3 mm	0.012 in	White	SCDR61	1SNA173016R1000		25	0.40
5	**Terminal block markers**	Blank card		White	RC410	1SNA229000R1500		1	5.16

Complete list of accessories is indicated in the terminal block datasheet.
Some accessories such as jumper bars may modify the terminal block's ratings: complete information in the accessories catalogue pages.

Technical data valid for copper conductors only.

1SNC161125S0201 - Rev. A

DR1.5/5 screw clamp terminal blocks

Miniblocks - 5 mm 0.197 in spacing

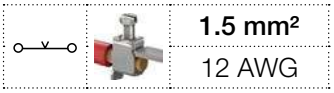

1.5 mm²
12 AWG

DR1.5/5

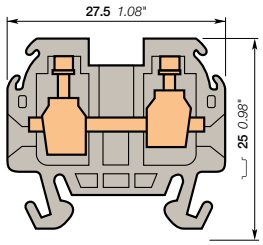

5 mm 0.197 in spacing

Description

Save space with compact over-all dimensions terminal block.

Ordering details

Description		Color	Type	Part Number		Pkg pce	Weight (1 pce) g
Miniblocks	Feed-through	Grey	DR1.5/5	1SNA115510R1600		100	5.00

Main technical data

		IEC	UL	CSA
1 conductor per clamp	Rigid: Solid/Stranded	0.2-2.5 mm²	28 - 12 AWG	28 - 14 AWG
	Flexible without ferrule	0.22-1.5 mm²		
	Flexible with insulated ferrule			
	Gauge			
Rated current / Rated cross section		20 A / 1.5 mm²	20 A / 12 AWG	20 A / 14 AWG
Rated short-time withstand current (1s)		180 A		
Rated voltage		250 V	300 V	300 V
Impulse withstand voltage				
Protection		IP20	NEMA 1	

Mounting instructions

Rail	TH 15-5.5
Wire stripping length	8.5 mm 0.335 in
Tool	Flat screwdriver Ø 3.5 mm Ø 0.138 in
Torque	0.4 - 0.6 Nm 3.5 - 5.3 lb.in

The connecting capacity data for one Rigid: Solid/Stranded, or one Flexible conductor (when applicable) is a mandatory information required by IEC, UL and CSA standards (Copper conductors).
All other data are provided as supplementary information only. For more details, please consult our CB, UL or CSA certificates and technical datasheet available on http://www.TE.com

CE RoHS USR CSA Gost R

Accessories

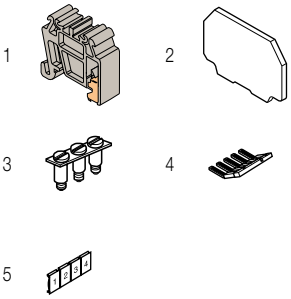

	Description			Color	Type	Part Number		Pkg pce	Weight (1 pce) g
1	**End stops**	6.5 mm	0.256 in	Grey	BADRL	1SNA199420R2100		50	2.00
2	**End sections**	1 mm	0.039 in	Grey	FEDR5	1SNA117318R2300		25	0.80
3	**Jumper bars**	2 poles	24 A		BJMI5DR	1SNA176704R0200		10	2.00
		3 poles				1SNA176705R0300		10	3.00
		4 poles				1SNA176706R0400		10	4.00
		10 poles				1SNA176708R1600		10	12.00
4	**Lateral jumper bars**	10 poles	25 A		PC51-10	1SNA167908R0600		10	5.00
5	**Terminal block markers**	Blank card		White	RC55	1SNA230000R1200		1	2.90

Complete list of accessories is indicated in the terminal block datasheet.
Some accessories such as jumper bars may modify the terminal block's ratings: complete information in the accessories catalogue pages.

Technical data valid for copper conductors only.

1SNC161145S0201 - Rev. A

DR1.5/5 screw clamp terminal blocks

Miniblocks - 5 mm 0.197 in spacing

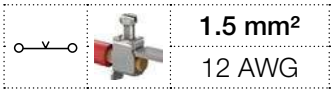

1.5 mm²
12 AWG

DR1.5/5

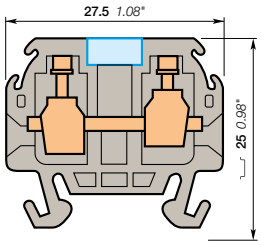

5 mm 0.197 in spacing

Description

Save space with compact over-all dimensions terminal block.

Ordering details

Description		Color	Type	Part Number		Pkg pce	Weight (1 pce) g
Miniblocks	Feed-through with partition	Grey	DR1.5/5.1	1SNA112086R0200		100	5.00

Main technical data

		IEC	UL	CSA
1 conductor per clamp	Rigid: Solid/Stranded	0.2-2.5 mm²		28-14 AWG
	Flexible without ferrule	0.22-1.5 mm²		
	Flexible with insulated ferrule			
	Gauge			
Rated current / Rated cross section		20 A / 1.5 mm²		20 A / 14 AWG
Rated short-time withstand current (1s)		180 A		
Rated voltage		250 V		300 V
Impulse withstand voltage				
Protection		IP20	NEMA 1	

Mounting instructions

Rail	TH 15-5.5
Wire stripping length	8.5 mm 0.335 in
Tool	Flat screwdriver Ø 3.5 mm Ø 0.138 in
Torque	0.4 - 0.6 Nm 3.5 - 5.3 lb.in

The connecting capacity data for one Rigid: Solid/Stranded, or one Flexible conductor (when applicable) is a mandatory information required by IEC, UL and CSA standards (Copper conductors). All other data are provided as supplementary information only. For more details, please consult our CB, UL or CSA certificates and technical datasheet available on http://www.TE.com

CE RoHS CSA Gost R

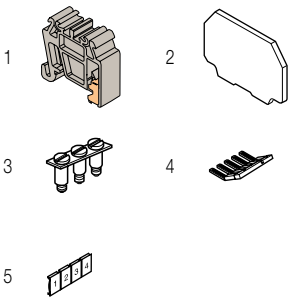

Accessories

	Description			Color	Type	Part Number		Pkg pce	Weight (1 pce) g
1	**End stops**	6.5 mm	0.256 in	Grey	BADRL	1SNA199420R2100		50	2.00
2	**End sections**	1 mm	0.039 in	Grey	FEDR5	1SNA117318R2300		25	0.80
3	**Jumper bars**	2 poles	24 A		BJMI5DR	1SNA176704R0200		10	2.00
		3 poles				1SNA176705R0300		10	3.00
		4 poles				1SNA176706R0400		10	4.00
		10 poles				1SNA176708R1600		10	12.00
		20 poles			BJS5-20	1SNA177652R0600		10	4.00
4	**Lateral jumper bars**	10 poles	25 A		PC51-10	1SNA167908R0600		10	5.00
5	**Terminal block markers**	Blank card		White	RC55	1SNA230000R1200		1	2.90

Complete list of accessories is indicated in the terminal block datasheet.
Some accessories such as jumper bars may modify the terminal block's ratings: complete information in the accessories catalogue pages.

Technical data valid for copper conductors only.

DR4/6 screw clamp terminal blocks

Miniblocks - 6 mm 0.236 in spacing

DR4/6

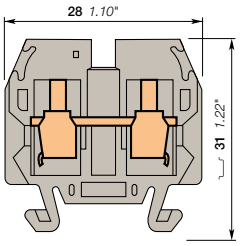

6 mm 0.236 in spacing

	4 mm²
	12 AWG

Description

Save space with compact over-all dimensions terminal block.

Ordering details

Description		Color	Type	Part Number		Pkg pce	Weight (1 pce) g
Miniblocks	Feed-through	Grey	DR4/6	1SNA110251R0500		50	6.00
		Blue	DR4/6.N	1SNA120251R0700		50	6.00

Main technical data

		IEC	UL	CSA
1 conductor per clamp	Rigid: Solid/Stranded	0.2-4 mm²	22 - 12 AWG	28-10 AWG
	Flexible without ferrule	0.22-4 mm²		
	Flexible with insulated ferrule			
	Gauge			
Rated current / Rated cross section		30 A / 4 mm²	20 A / 12 AWG	25 A / 10 AWG
Rated short-time withstand current (1s)		480 A		
Rated voltage		500 V	250 V	600 V
Impulse withstand voltage				
Protection		IP20	NEMA 1	

Mounting instructions

Rail	TH 15-5.5
Wire stripping length	9.5 mm 0.37 in
Tool	Flat screwdriver Ø 4 mm Ø 0.157 in
Torque	0.5 - 0.8 Nm 4.4 - 7.1 lb.in

The connecting capacity data for one Rigid: Solid/Stranded, or one Flexible conductor (when applicable) is a mandatory information required by IEC, UL and CSA standards (Copper conductors). All other data are provided as supplementary information only. For more details, please consult our CB, UL or CSA certificates and technical datasheet available on http://www.TE.com

CE RoHS USR cCSAus Gost R

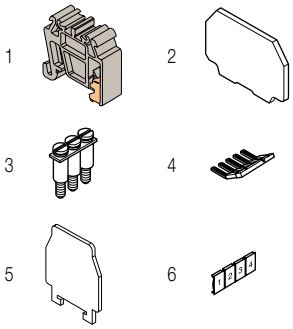

Accessories

	Description			Color	Type	Part Number		Pkg pce	Weight (1 pce) g
1	**End stops**	6.5 mm	0.256 in	Grey	BADRL	1SNA199420R2100		50	2.00
2	**End sections**	1 mm	0.039 in	Grey	FEDR61	1SNA117600R0300		25	0.80
3	**Jumper bars**	2 poles	32 A		BJM62	1SNA173217R2600		10	2.00
		3 poles				1SNA173218R0700		10	3.00
		4 poles				1SNA173219R0000		10	4.00
		10 poles				1SNA173226R2700		10	10.00
4	**Lateral jumper bars**	10 poles	35 A		PC61-10	1SNA163311R2200		10	5.00
5	**Circuit separators**	0.3 mm	0.012 in	White	SCDR61	1SNA173016R1000		25	0.40
6	**Terminal block markers**	Blank card		White	RC65	1SNA232000R0000		1	3.60

Complete list of accessories is indicated in the terminal block datasheet.
Some accessories such as jumper bars may modify the terminal block's ratings: complete information in the accessories catalogue pages.

Ground screw clamp terminal blocks

Description		Color	Type	Part Number		Pkg pce	Weight (1 pce) g
Ground	Profile aligned with DR4/6...	Green-yellow	DR4/6.P	1SNA160496R2600		50	10.00

Technical data valid for copper conductors only.

1SNC161126S0201 - Rev. A

DR4/6.1 screw clamp terminal blocks

Miniblocks - 6 mm 0.236 in spacing

4 mm²
12 AWG

DR4/6.1

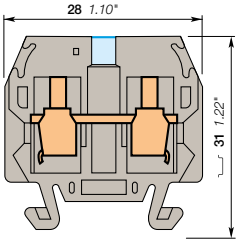

6 mm 0.236 in spacing

Description

Save space with compact over-all dimensions terminal block.

Ordering details

Description		Color	Type	Part Number		Pkg pce	Weight (1 pce) g
Miniblocks	Feed-through with partition	Grey	DR4/6.1	1SNA110491R1700		50	6.00
	Feed-through	Blue	DR4/6.1.N	1SNA120491R1100		50	6.00

Main technical data

		IEC	UL	CSA
1 conductor per clamp	Rigid: Solid/Stranded	0.2-4 mm²		28-10 AWG
	Flexible without ferrule	0.22-4 mm²		
	Flexible with insulated ferrule			
	Gauge			
Rated current / Rated cross section		30 A / 4 mm²		25 A / 10 AWG
Rated short-time withstand current (1s)		480 A		
Rated voltage		500 V		600 V
Impulse withstand voltage				
Protection		IP20	NEMA 1	

The connecting capacity data for one Rigid: Solid/Stranded, or one Flexible conductor (when applicable) is a mandatory information required by IEC, UL and CSA standards (Copper conductors). All other data are provided as supplementary information only. For more details, please consult our CB, UL or CSA certificates and technical datasheet available on http://www.TE.com

CE RoHS cCSAus Gost R

Mounting instructions

Rail	TH 15-5.5
Wire stripping length	9.5 mm 0.37 in
Tool	Flat screwdriver Ø 4 mm Ø 0.157 in
Torque	0.5 - 0.8 Nm 4.4 - 7.1 lb.in

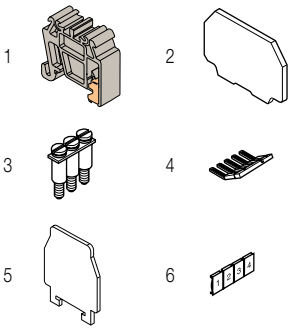

Accessories

	Description			Color	Type	Part Number		Pkg pce	Weight (1 pce) g
1	**End stops**	6.5 mm	0.256 in	Grey	BADRL	1SNA199420R2100		50	2.00
2	**End sections**	1 mm	0.039 in	Grey	FEDR61	1SNA117600R0300		25	0.80
3	**Jumper bars**	2 poles	32 A		BJM62	1SNA173217R2600		10	2.00
		3 poles				1SNA173218R0700		10	3.00
		4 poles				1SNA173219R0000		10	4.00
		10 poles				1SNA173226R2700		10	10.00
4	**Lateral jumper bars**	10 poles	35 A		PC61-10	1SNA163311R2200		10	5.00
5	**Circuit separators**	0.3 mm	0.012 in	White	SCDR61	1SNA173016R1000		25	0.40
6	**Terminal block markers**	Blank card		White	RC65	1SNA232000R0000		1	3.60

Complete list of accessories is indicated in the terminal block datasheet.
Some accessories such as jumper bars may modify the terminal block's ratings: complete information in the accessories catalogue pages.

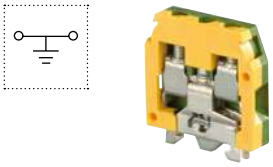

Ground screw clamp terminal blocks

Description		Color	Type	Part Number		Pkg pce	Weight (1 pce) g
Ground	Profile aligned with DR4/6...	Green-yellow	DR4/6.P	1SNA160496R2600		50	10.00

Technical data valid for copper conductors only.

1SNC161130S0201 - Rev. A

DR4/6.P screw clamp terminal blocks

Miniblocks - 6 mm 0.236 in spacing

DR4/6.P

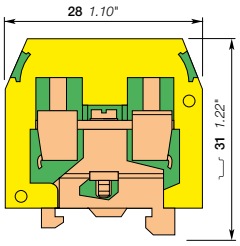

6 mm 0.236 in spacing

		4 mm²
		12 AWG

Description

- Save space with compact over-all dimensions terminal block,
- For DIN 2 rail,
- Reliable electrical and mechanical contact with the rail.

Ordering details

Description		Color	Type	Part Number		Pkg pce	Weight (1 pce) g
Ground	Screwless rail connection	Green-yellow	DR4/6.P	1SNA160496R2600		50	10.00

Main technical data

		IEC	UL	CSA
1 conductor per clamp	Rigid: Solid/Stranded	0.2-4 mm²	22-12 AWG	28-10 AWG
	Flexible without ferrule	0.22-4 mm²		
	Flexible with insulated ferrule			
	Gauge			
Rated cross section		4 mm²	12 AWG	10 AWG
Rated short-time withstand current (1s)		480 A		

Mounting instructions

Rail		TH 15-5.5
Wire stripping length		9.5 mm 0.37 in
Screw clamp Tool		Flat screwdriver Ø 4 mm Ø 0.157 in
Torque		0.5 - 0.8 N.m 4.4 - 7.1 lb.in

The connecting capacity data for one Rigid: Solid/Stranded, or one Flexible conductor (when apply) is a mandatory information required by IEC, UL and CSA standards (Copper conductors).
All other data are provided as supplementary information only. For more details, please consult our CB, UL or CSA certificates and technical datasheet available on http://www.TE.com

CE RoHS USR cCSAus Gost R

Accessories

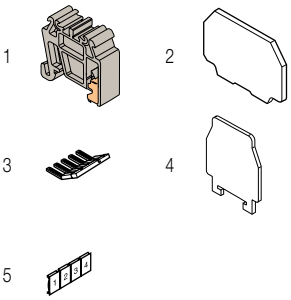

	Description			Color	Type	Part Number		Pkg pce	Weight (1 pce) g
1	**End stops**	6.5 mm	0.256 in	Grey	BADRL	1SNA199420R2100		50	2.00
2	**End sections**	1 mm	0.039 in	Grey	FEDR61	1SNA117600R0300		25	0.80
3	**Lateral jumper bars**	10 poles	35 A		PC61-10	1SNA163311R2200		10	5.00
4	**Circuit separators**	0.3 mm	0.012 in	White	SCDR61	1SNA173016R1000		25	0.40
5	**Terminal block markers**	Blank card		White	RC65	1SNA232000R0000		1	3.60

Complete list of accessories is indicated in the terminal block datasheet.
Some accessories such as jumper bars may modify the terminal block's ratings: complete information in the accessories catalogue pages.

Technical data valid for copper conductors only.

1SNC161050S0201 - Rev. A

DR2.5/5.S screw clamp terminal blocks

Miniblocks - 5.08 mm 0.200 in spacing

2.5 mm²

1SNC161307F0014

DR2.5/5.S

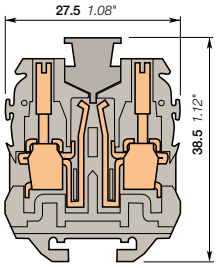

5.08 mm 0.200 in spacing

Description

- Save space with compact over-all dimensions terminal block,
- Ease your disconnect operations with the disconnect plug.

Ordering details

Description		Color	Type	Part Number		Pkg pce	Weight (1 pce) g
Miniblocks	Disconnect with 2 test sockets DIA 2 mm 0.079 in	Grey	DR2.5/5.S1	1SNA112098R1600		100	6.00

Main technical data

		IEC	UL	CSA
1 conductor per clamp	Rigid: Solid/Stranded	0.5-4 mm²		
	Flexible without ferrule	0.5-2.5 mm²		
	Flexible with insulated ferrule			
	Gauge			
Rated current / Rated cross section		3 A / 2.5 mm²		
Rated short-time withstand current (1s)		300 A		
Rated voltage		380 V		
Impulse withstand voltage				
Protection		IP20	NEMA 1	

Mounting instructions

Rail	TH 15-5.5
Wire stripping length	8.5 mm 0.335 in
Tool	Flat screwdriver Ø 3.5 mm Ø 0.138 in
Torque	0.4 - 0.6 Nm 3.5 - 5.3 lb.in

The connecting capacity data for one Rigid: Solid/Stranded, or one Flexible conductor (when applicable) is a mandatory information required by IEC, UL and CSA standards (Copper conductors). All other data are provided as supplementary information only. For more details, please consult our CB, UL or CSA certificates and technical datasheet available on http://www.TE.com

CE RoHS Gost R

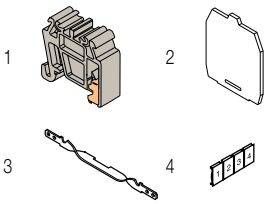

Accessories

	Description			Color	Type	Part Number		Pkg pce	Weight (1 pce) g
1	**End stops**	6.5 mm	0.256 in	Grey	BADRL	1SNA199420R2100		50	2.00
2	**End sections**	1 mm	0.039 in	Grey	FEDR51	1SNA117668R0200		25	1.00
3	**Shield connectors**				CBD5	1SNA167674R0200		25	
4	**Terminal block markers** Blank card			White	RC55	1SNA230000R1200		1	2.90

Complete list of accessories is indicated in the terminal block datasheet.
Some accessories such as jumper bars may modify the terminal block's ratings: complete information in the accessories catalogue pages.

Technical data valid for copper conductors only.

DR4/8.SF screw clamp terminal blocks

Miniblocks - 8 mm 0.315 in spacing

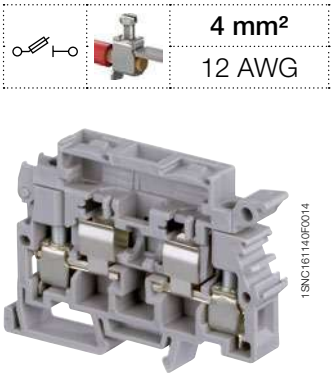

4 mm²	
12 AWG	

1SNC161140F0014

DR4/8.SF

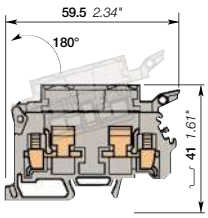

8 mm 0.315 in spacing

Description

- Save space with compact over-all dimensions terminal block,
- Protect your circuits with 5 x 20 and 5 x 25 fuse terminal blocks (fuse not supplied with terminal blocks).

Ordering details

Description		Color	Type	Part Number		Pkg pce	Weight (1 pce) g
Miniblocks	Fuse	Grey	DR4/8.SF	1SNA110368R1200		50	14.00

Main technical data

		IEC	UL	CSA
1 conductor per clamp	Rigid: Solid/Stranded	0.5-4 mm²		18 - 12 AWG
	Flexible without ferrule	0.5-4 mm²		
	Flexible with insulated ferrule			
	Gauge	A4		
Rated current / Rated cross section		6.3 A / 4 mm²		6.3 A / 12 AWG
Rated short-time withstand current (1s)		480 A		
Rated voltage		630 V		300 V
Impulse withstand voltage		8000 V		
Protection		IP20	NEMA 1	

Mounting instructions

Rail		TH 15-5.5
Wire stripping length		9.5 mm 0.37 in
Tool		Flat screwdriver Ø 4 mm Ø 0.157 in
Torque		0.5 - 0.8 Nm 4.4 - 7.1 lb.in

The connecting capacity data for one Rigid: Solid/Stranded, or one Flexible conductor (when applicable) is a mandatory information required by IEC, UL and CSA standards (Copper conductors). All other data are provided as supplementary information only. For more details, please consult our CB, UL or CSA certificates and technical datasheet available on http://www.TE.com

CE RoHS CSA Gost R

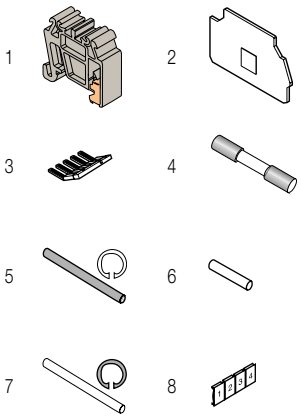

Accessories

	Description			Color	Type	Part Number		Pkg pce	Weight (1 pce) g
1	**End stops**	End stops	0.256 in	Grey	BADRL	1SNA199420R2100		50	2.00
2	**End sections**	1.5 mm	0.059 in	Grey	FEM8S	1SNA116951R1500		20	2.60
3	**Lateral jumper bars**	10 poles	35 A		PC81-10	1SNA173523R1100		10	5.00
4	**Fuses**	0.5 A			FU520	1SNA008288R1500		10	
		3.15 A				1SNA008289R1600		10	
		1 A				1SNA008290R1300		10	
		2 A				1SNA008291R0000		10	
		5 A				1SNA008292R0100		10	
5	**Assembly rods**	2 poles			TGA8	1SNA168672R1100		10	1.00
		3 poles				1SNA168673R1200		10	
		4 poles				1SNA168674R1300		10	
6	**Neutral cartridges**				CN5	1SNA179371R1600		10	3.90
7	**Spring retaining rings**				ANT	1SNA168675R1400		10	
8	**Terminal block markers**	Blank card		White	RC810	1SNA234000R0200		1	8.20

Complete list of accessories is indicated in the terminal block datasheet.
Some accessories such as jumper bars may modify the terminal block's ratings: complete information in the accessories catalogue pages.

1SNC161127S0201 - Rev. A

Technical data valid for copper conductors only.

DS2.5/5.2L spring terminal blocks
Miniblocks - 5 mm 0.197 in spacing

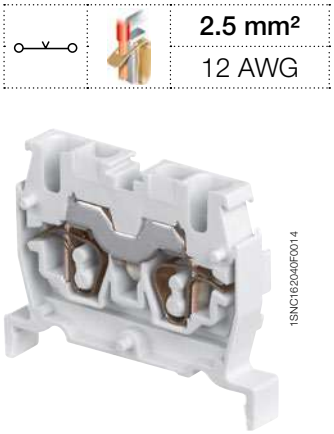

DS2.5/5.2L

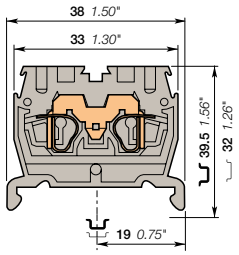

5 mm 0.197 in spacing

		2.5 mm²
		12 AWG

Description

- Save space with compact terminal blocks,
- Easy mounting on DIN rail TH35,
- Easy to access thanks to the front wiring entry,
- Clamping contact pressure non dependent on the operator and automatic creeping compensation.

Ordering details

Description		Color	Type	Part Number		Pkg pce	Weight (1 pce) g
Feed-through	2 connections	Grey	DS2.5/5.2L	1SNA290221R0400		100	4.00
		Blue	DS2.5/5.N.2L	1SNA290223R0600		100	4.00

Main technical data

		IEC	UL	CSA
1 conductor per clamp	Rigid: Solid/Stranded	0.12-4 mm²	26-12 AWG	
	Flexible without ferrule	0.12-2.5 mm²		
	Flexible with non insulated ferrule			
	Flexible with insulated ferrule	0.5-1.5 mm²		
	Gauge	A2		
Rated current / Rated cross section		24 A / 2.5 mm²	15 A / 12 AWG	
Rated short-time withstand current (1s)		300 A		
Rated voltage		800 V	600 V	
Impulse withstand voltage		8000 V		
Protection		IP20	NEMA 1	

Mounting instructions

Rail	TH 35-7.5, TH 35-15
Wire stripping length	9.5 mm 0.37 in
Tool	Flat screwdriver Ø 3.5 mm Ø 0.138 in

The connecting capacity data for one Rigid: Solid/Stranded, or one Flexible conductor (when applicable) is a mandatory information required by IEC, UL and CSA standards (Copper conductors). All other data are provided as supplementary information only. For more details, please consult our CB, UL or CSA certificates and technical datasheet available on http://www.TE.com

RoHS RoHS USR CNR Gost R

Notes

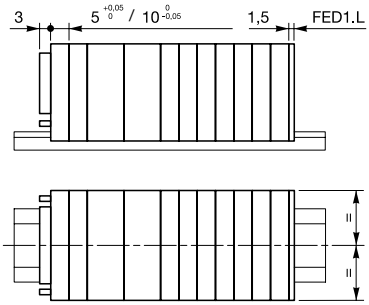

Accessories

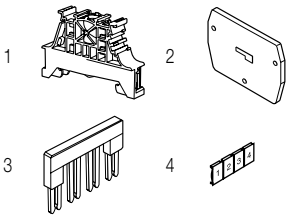

	Description			Color	Type	Part Number		Pkg pce	Weight (1 pce) g
1	**End stops**	5.2 mm	0.205 in	Dark grey	BAZ1	1SNK900002R0000		50	5.30
		10 mm	0.394 in		BAM4	1SNK900001R0000		50	14.00
2	**End sections**	1.5 mm	0.059 in	Grey	FED1.L	1SNA291301R0200		20	1.40
		4 mm	0.157 in		FED2.L	1SNA291311R2300		20	1.90
3	**Jumper bars**	2 poles	24 A	Orange	BJDL5-2	1SNA291102R2300		50	1.00
		3 poles			BJDL5-3	1SNA291103R2400		50	0.70
		4 poles			BJDL5-4	1SNA291104R2500		50	0.80
		5 poles			BJDL5-5	1SNA291105R2600		20	0.90
		10 poles			BJDL5-10	1SNA291110R2600		20	1.20
4	**Terminal block markers** Blank card			White	RC55	1SNA230000R1200		1	2.90

Complete list of accessories is indicated in the terminal block datasheet.
Some accessories such as jumper bars may modify the terminal block's ratings: complete information in the accessories catalogue pages.

Technical data valid for copper conductors only.

1SNC162090S0201 - Rev. B

DS2.5/10.4L spring terminal blocks
Miniblocks - 10 mm 0.394 in spacing

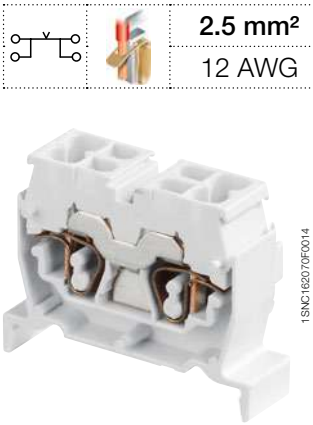

DS2.5/10.4L

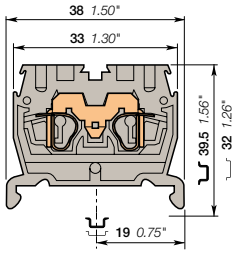

10 mm 0.394 in spacing

2.5 mm²
12 AWG

Description

- Save space with compact terminal blocks,
- Easy mounting on DIN rail TH35,
- Easy to access thanks to the front wiring entry,
- Clamping contact pressure non dependent on the operator and automatic creeping compensation.

Ordering details

Description		Color	Type	Part Number		Pkg pce	Weight (1 pce) g
Feed-through	4 connections	Grey	DS2.5/10.4L	1SNA290231R0600		100	6.00
		Blue	DS2.5/10.N.4L	1SNA290233R0000		100	6.00
		Yellow	DS2.5/10.4L.YL	1SNA290501R0000		100	6.00

Main technical data

		IEC	UL	CSA
1 conductor per clamp	Rigid: Solid/Stranded	0.12-4 mm²	26-12 AWG	
	Flexible without ferrule	0.12-2.5 mm²		
	Flexible with non insulated ferrule			
	Flexible with insulated ferrule	0.5-1.5 mm²		
	Gauge	A2		
Rated current / Rated cross section		24 A / 2.5 mm²	15 A / 12 AWG	
Rated short-time withstand current (1s)		300 A		
Rated voltage		800 V	600 V	
Impulse withstand voltage		8000 V		
Protection		IP20	NEMA 1	

Mounting instructions

Rail	TH 35-7.5, TH 35-15
Wire stripping length	9.5 mm 0.37 in
Tool	Flat screwdriver Ø 3.5 mm Ø 0.138 in

The connecting capacity data for one Rigid: Solid/Stranded, or one Flexible conductor (when applicable) is a mandatory information required by IEC, UL and CSA standards (Copper conductors). All other data are provided as supplementary information only. For more details, please consult our CB, UL or CSA certificates and technical datasheet available on http://www.TE.com

RoHS RoHS USR CNR Gost R

Notes

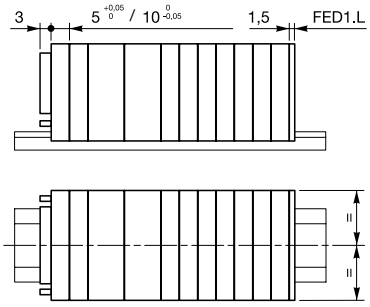

Accessories

	Description			Color	Type	Part Number		Pkg pce	Weight (1 pce) g
1	**End stops**	5.2 mm	0.205 in	Dark grey	BAZ1	1SNK900002R0000		50	5.30
		10 mm	0.394 in		BAM4	1SNK900001R0000		50	14.00
2	**End sections**	1.5 mm	0.059 in	Grey	FED1.L	1SNA291301R0200		20	1.40
		4 mm	0.157 in		FED2.L	1SNA291311R2300		20	1.90
3	**Jumper bars**	2 poles	24 A	Orange	BJDL10-2	1SNA291322R2600		50	1.00
		3 poles			BJDL10-3	1SNA291323R2700		50	1.00
		4 poles			BJDL10-4	1SNA291324R2000		20	2.00
		5 poles			BJDL10-5	1SNA291325R2100		20	2.00
4	**Terminal block markers** Blank card			White	RC55	1SNA230000R1200		1	2.90

1 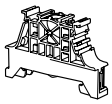
2 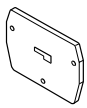
3 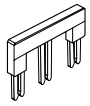
4

Complete list of accessories is indicated in the terminal block datasheet.
Some accessories such as jumper bars may modify the terminal block's ratings: complete information in the accessories catalogue pages.

Technical data valid for copper conductors only.

1SNC162091S0201 - Rev. B

DR2.5/5.2L spring terminal blocks
Miniblocks - 5 mm 0.197 in spacing

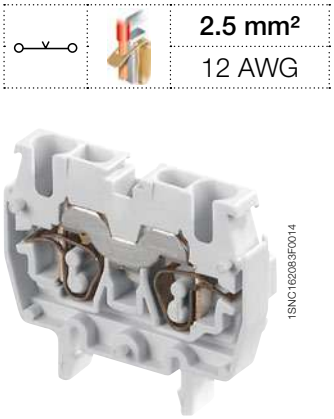

DR2.5/5.2L

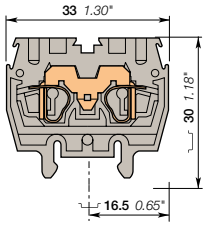

5 mm 0.197 in spacing

	2.5 mm²
	12 AWG

Description

- Save space with compact terminal blocks,
- Easy mounting on DIN rail TH15,
- Easy to access thanks to the front wiring entry,
- Clamping contact pressure non dependent on the operator and automatic creeping compensation.

Ordering details

Description		Color	Type	Part Number		Pkg pce	Weight (1 pce) g
Feed-through	2 connections	Grey	DR2.5/5.2L	1SNA290201R1100		100	4.00
		Blue	DR2.5/5.N.2L	1SNA290203R1300		100	4.00

Main technical data

		IEC	UL	CSA
1 conductor per clamp	Rigid: Solid/Stranded	0.12-4 mm²	26-12 AWG	
	Flexible without ferrule	0.12-2.5 mm²		
	Flexible with non insulated ferrule			
	Flexible with insulated ferrule	0.5-1.5 mm²		
	Gauge	A2		
Rated current / Rated cross section		24 A / 2.5 mm²	15 A / 12 AWG	
Rated short-time withstand current (1s)		300 A		
Rated voltage		800 V	600 V	
Impulse withstand voltage		8000 V		
Protection		IP20	NEMA 1	

The connecting capacity data for one Rigid: Solid/Stranded, or one Flexible conductor (when applicable) is a mandatory information required by IEC, UL and CSA standards (Copper conductors). All other data are provided as supplementary information only. For more details, please consult our CB, UL or CSA certificates and technical datasheet available on http://www.TE.com

RoHS RoHS · USR CNR · Gost R

Mounting instructions

Rail		TH 15-5.5
Wire stripping length		9.5 mm 0.37 in
Tool		Flat screwdriver Ø 3.5 mm Ø 0.138 in

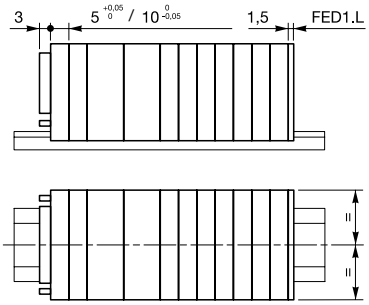

Accessories

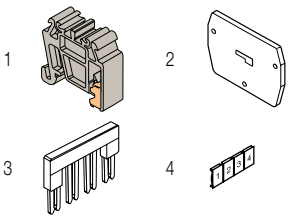

	Description			Color	Type	Part Number		Pkg pce	Weight (1 pce) g
1	**End stops**	6.5 mm	0.256 in	Grey	BADRL	1SNA199420R2100		50	2.00
2	**End sections**	1.5 mm	0.059 in	Grey	FED1.L	1SNA291301R0200		20	1.40
		4 mm	0.157 in		FED2.L	1SNA291311R2300		20	1.90
3	**Jumper bars**	2 poles	24 A	Orange	BJDL5-2	1SNA291102R2300		50	1.00
		3 poles			BJDL5-3	1SNA291103R2400		50	0.70
		4 poles			BJDL5-4	1SNA291104R2500		50	0.80
		5 poles			BJDL5-5	1SNA291105R2600		20	0.90
		10 poles			BJDL5-10	1SNA291110R2600		20	1.20
4	**Terminal block markers**	Blank card		White	RC55	1SNA230000R1200		1	2.90

Complete list of accessories is indicated in the terminal block datasheet.
Some accessories such as jumper bars may modify the terminal block's ratings: complete information in the accessories catalogue pages.

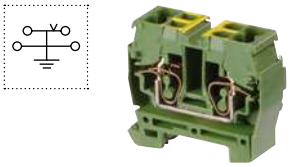

Ground spring terminal blocks

Description		Color	Type	Part Number		Pkg pce	Weight (1 pce) g
Ground	Profile aligned with DR2.5/...L	Green-yellow	DR2.5/10.P.4L	1SNA290219R1200		100	7.00

Technical data valid for copper conductors only.

DR2.5/10.4L spring terminal blocks

Miniblocks - 10 mm 0.394 in spacing

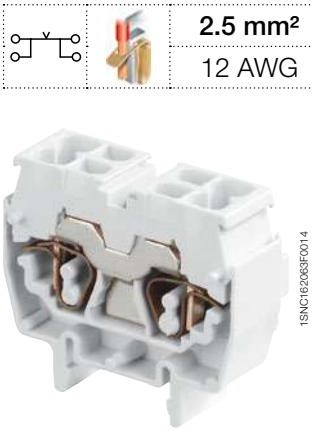

1SNC162063F0014

DR2.5/10.4L

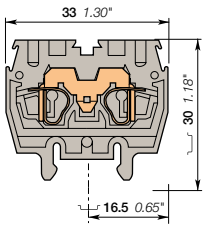

10 mm 0.394 in spacing

2.5 mm²

12 AWG

Description

- Save space with compact terminal blocks,
- Easy mounting on DIN rail TH15,
- Easy to access thanks to the front wiring entry,
- Clamping contact pressure non dependent on the operator and automatic creeping compensation.

Ordering details

Description		Color	Type	Part Number		Pkg pce	Weight (1 pce) g
Feed-through	4 connections	Grey	DR2.5/10.4L	1SNA290211R0200		100	6.00
		Blue	DR2.5/10.N.4L	1SNA290213R0400		100	6.00

Main technical data

		IEC	UL	CSA
1 conductor per clamp	Rigid: Solid/Stranded	0.12-4 mm²	26-12 AWG	
	Flexible without ferrule	0.12-2.5 mm²		
	Flexible with non insulated ferrule			
	Flexible with insulated ferrule	0.5-1.5 mm²		
	Gauge	A2		
Rated current / Rated cross section		24 A / 2.5 mm²	15 A / 12 AWG	
Rated short-time withstand current (1s)		300 A		
Rated voltage		800 V	600 V	
Impulse withstand voltage		8000 V		
Protection		IP20	NEMA 1	

Mounting instructions

Rail		TH 15-5.5
Wire stripping length		9.5 mm 0.37 in
Tool		Flat screwdriver Ø 3.5 mm Ø 0.138 in

The connecting capacity data for one Rigid: Solid/Stranded, or one Flexible conductor (when applicable) is a mandatory information required by IEC, UL and CSA standards (Copper conductors). All other data are provided as supplementary information only. For more details, please consult our CB, UL or CSA certificates and technical datasheet available on http://www.TE.com

RoHS RoHS USR CNR Gost R

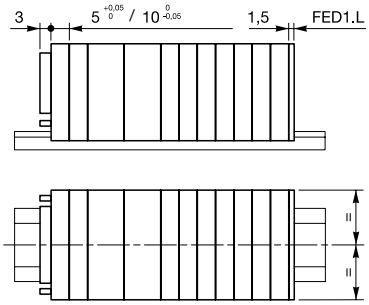

Accessories

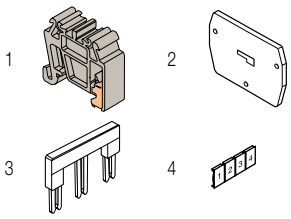

	Description			Color	Type	Part Number		Pkg pce	Weight (1 pce) g
1	**End stops**	6.5 mm	0.256 in	Grey	BADRL	1SNA199420R2100		50	2.00
2	**End sections**	1.5 mm	0.059 in	Grey	FED1.L	1SNA291301R0200		20	1.40
		4 mm	0.157 in		FED2.L	1SNA291311R2300		20	1.90
3	**Jumper bars**	2 poles	24 A	Orange	BJDL10-2	1SNA291322R2600		50	1.00
		3 poles			BJDL10-3	1SNA291323R2700		50	1.00
		4 poles			BJDL10-4	1SNA291324R2000		20	2.00
		5 poles			BJDL10-5	1SNA291325R2100		20	2.00
4	**Terminal block markers** Blank card			White	RC55	1SNA230000R1200		1	2.90

Complete list of accessories is indicated in the terminal block datasheet.
Some accessories such as jumper bars may modify the terminal block's ratings: complete information in the accessories catalogue pages.

Ground spring terminal blocks

Description		Color	Type	Part Number		Pkg pce	Weight (1 pce) g
Ground	Profile aligned with DR2.5/...L	Green-yellow	DR2.5/10.P.4L	1SNA290219R1200		100	7.00

Technical data valid for copper conductors only.

1SNC162093S0201 - Rev. B

DR2.5/10.P.4L spring terminal blocks

Miniblocks - 10 mm 0.394 in spacing

2.5 mm²

12 AWG

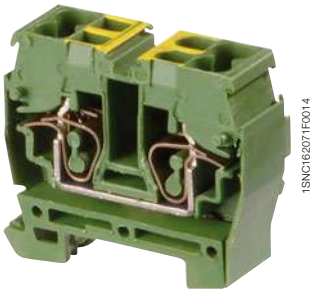

1SNC162071F0014

DR2.5/10.P.4L

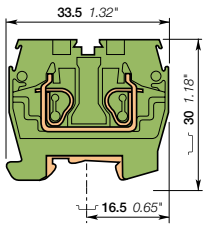

10 mm 0.394 in spacing

Description

- Save space with compact terminal blocks,
- Easy mounting on DIN rail TH15,
- Easy to access thanks to the front wiring entry,
- Clamping contact pressure non dependent on the operator and automatic creeping compensation.

Ordering details

Description		Color	Type	Part Number		Pkg pce	Weight (1 pce) g
Ground	Screwless rail connection	Green-yellow	DR2.5/10.P.4L	1SNA290219R1200		100	7.00

Main technical data

		IEC	UL	CSA
1 conductor per clamp	Rigid: Solid/Stranded	0.12-4 mm²		
	Flexible without ferrule	0.12-2.5 mm²		
	Flexible with non insulated ferrule			
	Flexible with insulated ferrule	0.5-1.5 mm²		
	Gauge	A2		
Rated cross section		2.5 mm²		
Rated short-time withstand current (1s)		300 A		
Protection		IP20	NEMA 1	

Mounting instructions

Rail		TH 15-5.5
Wire stripping length		9.5 mm 0.37 in
Tool		Flat screwdriver Ø 3.5 mm Ø 0.138 in

The connecting capacity data for one Rigid: Solid/Stranded, or one Flexible conductor (when applicable) is a mandatory information required by IEC, UL and CSA standards (Copper conductors). All other data are provided as supplementary information only. For more details, please consult our CB, UL or CSA certificates and technical datasheet available on http://www.TE.com

RoHS RoHS Gost R

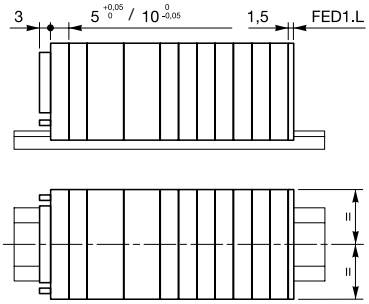

Accessories

	Description			Color	Type	Part Number		Pkg pce	Weight (1 pce) g
1	**End stops**	6.5 mm	0.256 in	Grey	BADRL	1SNA199420R2100		50	2.00
2	**End sections**	1.5 mm	0.059 in	Grey	FED1.L	1SNA291301R0200		20	1.40
3	**Terminal block markers**	Blank card		White	RC55	1SNA230000R1200		1	2.90

1 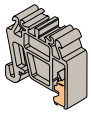

2 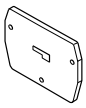

3

Complete list of accessories is indicated in the terminal block datasheet.
Some accessories such as jumper bars may modify the terminal block's ratings: complete information in the accessories catalogue pages.

Technical data valid for copper conductors only.

1SNC162094S0201 - Rev. B

DB2.5/5.2L spring terminal blocks
Miniblocks - 5 mm 0.197 in spacing

DB2.5/5.2L

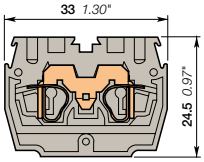

5 mm 0.197 in spacing

	2.5 mm²
	12 AWG

Description

- Save space with compact terminal blocks,
- Easy base mounting thanks to the usage of flanges,
- Easy to access thanks to the front wiring entry,
- Clamping contact pressure non dependent on the operator and automatic creeping compensation.

Ordering details

Description		Color	Type	Part Number		Pkg pce	Weight (1 pce) g
Feed-through	2 connections	Grey	DB2.5/5.2L	1SNA290241R1000		100	4.00
		Blue	DB2.5/5.N.2L	1SNA290243R1200		100	4.00

Main technical data

		IEC	UL	CSA
1 conductor per clamp	Rigid: Solid/Stranded	0.12-4 mm²	26-12 AWG	
	Flexible without ferrule	0.12-2.5 mm²		
	Flexible with non insulated ferrule			
	Flexible with insulated ferrule	0.5-1.5 mm²		
	Gauge	A2		
Rated current / Rated cross section		24 A / 2.5 mm²	15 A / 12 AWG	
Rated short-time withstand current (1s)		300 A		
Rated voltage		800 V	600 V	
Impulse withstand voltage		8000 V		
Protection		IP20	NEMA 1	

Mounting instructions

Rail		
Wire stripping length		9.5 mm 0.37 in
Tool		Flat screwdriver Ø 3.5 mm Ø 0.138 in

The connecting capacity data for one Rigid: Solid/Stranded, or one Flexible conductor (when applicable) is a mandatory information required by IEC, UL and CSA standards (Copper conductors). All other data are provided as supplementary information only. For more details, please consult our CB, UL or CSA certificates and technical datasheet available on http://www.TE.com

RoHS RoHS | USR CNR | Gost R

Notes

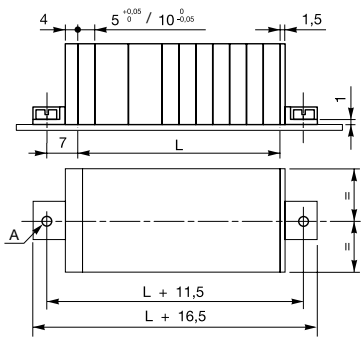

L = (N blocks x 5.05) + (N blocks x 10)

A: 2 holes DIA 3.2 mm for 3 mm screw with cylindrical head (not supplied)

Accessories

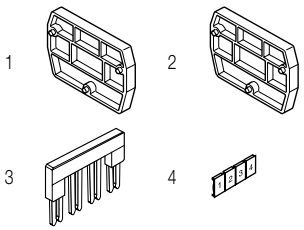

	Description			Color	Type	Part Number		Pkg pce	Weight (1 pce) g
1	**End section kits**			Grey	FEDB.L	1SNA290281R0100		20	3.00
2	**End sections**	4 mm	0.157 in	Grey	FED2.L	1SNA291311R2300		20	1.90
3	**Jumper bars**	2 poles	24 A	Orange	BJDL5-2	1SNA291102R2300		50	1.00
		3 poles			BJDL5-3	1SNA291103R2400		50	0.70
		4 poles			BJDL5-4	1SNA291104R2500		50	0.80
		5 poles			BJDL5-5	1SNA291105R2600		20	0.90
		10 poles			BJDL5-10	1SNA291110R2600		20	1.20
4	**Terminal block markers** Blank card			White	RC55	1SNA230000R1200		1	2.90

Complete list of accessories is indicated in the terminal block datasheet.
Some accessories such as jumper bars may modify the terminal block's ratings: complete information in the accessories catalogue pages.

Technical data valid for copper conductors only.

1SNC162095S0201 - Rev. B

DH2.5/5.2L spring terminal blocks

Miniblocks - 5 mm 0.197 in spacing

DH2.5/5.2L

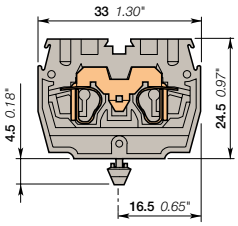

5 mm 0.197 in spacing

	2.5 mm²
	12 AWG

Description

- Save space with compact terminal blocks,
- Easy base mounting thanks to snap in mounting foot,
- Clamping contact pressure non dependent on the operator and automatic creeping compensation.

Ordering details

Description		Color	Type	Part Number		Pkg pce	Weight (1 pce) g
Feed-through	2 connections	Grey	DH2.5/5.2L	1SNA290261R1400		100	4.00

Main technical data

		IEC	UL	CSA
1 conductor per clamp	Rigid: Solid/Stranded	0.12-4 mm²	26-12 AWG	
	Flexible without ferrule	0.12-2.5 mm²		
	Flexible with non insulated ferrule			
	Flexible with insulated ferrule	0.5-1.5 mm²		
	Gauge	A2		
Rated current / Rated cross section		24 A / 2.5 mm²	15 A / 12 AWG	
Rated short-time withstand current (1s)		300 A		
Rated voltage		800 V	600 V	
Impulse withstand voltage		8000 V		
Protection		IP20	NEMA 1	

The connecting capacity data for one Rigid: Solid/Stranded, or one Flexible conductor (when applicable) is a mandatory information required by IEC, UL and CSA standards (Copper conductors). All other data are provided as supplementary information only. For more details, please consult our CB, UL or CSA certificates and technical datasheet available on http://www.TE.com

RoHS RoHS | USR CNR | Gost R

Mounting instructions

Rail		
Wire stripping length		9.5 mm 0.37 in
Tool		Flat screwdriver Ø 3.5 mm Ø 0.138 in

Notes

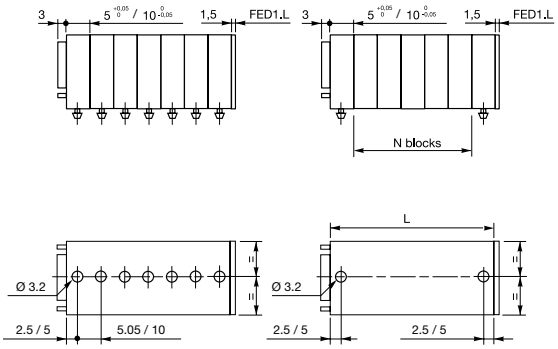

For 10 mm blocks, mount a DH block every 4 blocks.
For 5 mm blocks, mount a DH block every 8 blocks.

N blocks = 8 blocks max with 5 mm spacing
N blocks = 4 blocks max with 10 mm spacing

L = (N blocks x 5.05) + (N blocks x 10)
Panel thickness: 0.6 to 1.2 mm 0.024 to 0.047 in

Accessories

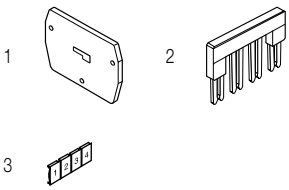

	Description			Color	Type	Part Number		Pkg pce	Weight (1 pce) g
1	**End sections**	1.5 mm	0.059 in	Grey	FED1.L	1SNA291301R0200		20	1.40
		4 mm	0.157 in		FED2.L	1SNA291311R2300		20	1.90
2	**Jumper bars**	2 poles	24 A	Orange	BJDL5-2	1SNA291102R2300		50	1.00
		3 poles			BJDL5-3	1SNA291103R2400		50	0.70
		4 poles			BJDL5-4	1SNA291104R2500		50	0.80
		5 poles			BJDL5-5	1SNA291105R2600		20	0.90
		10 poles			BJDL5-10	1SNA291110R2600		20	1.20
3	**Terminal block markers** Blank card			White	RC55	1SNA230000R1200		1	2.90

Complete list of accessories is indicated in the terminal block datasheet.
Some accessories such as jumper bars may modify the terminal block's ratings: complete information in the accessories catalogue pages.

Technical data valid for copper conductors only.

DS2.5/5.ADO IDC terminal blocks

Miniblocks ADO - screw clamp - 5 mm 0.197 in spacing

DS2.5/5.ADO

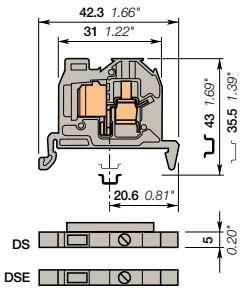

5 mm 0.197 in spacing

1 mm²
18 AWG

Description

- The mini blocks are particularly designed for applications where space is very restricted,
- With the TE Connectivity ADO System®, experience the fastest and most reliable connection on the market,
- This solution brings all the benefits of the ADO System® and allows installators to connect on standard screw clamp,
- Up to 2 wires per connection in the ADO System® connection.

Ordering details

Description		Color	Type	Part Number		Pkg pce	Weight (1 pce) g
Feed-through	With rib	Grey	DS2.5/5.ADO	1SNA399514R2300		100	4.00
	Without rib for TB assembly extremity	Grey	DSE2.5/5.ADO	1SNA399518R0700		20	4.00

Main technical data

		IEC	UL	CSA
ADO	Rigid: Solid/Stranded	0.2-1 mm²	24-18 AWG	
	Flexible without ferrule	0.22-1 mm²		
Screw clamp	Rigid: Solid/Stranded	0.2-4 mm²	24-12 AWG	
	Flexible without ferrule	0.22-2.5 mm²		
	Flexible with insulated ferrule			
	Gauge	A3		
Rated current / Rated cross section		13.5 A / 1 mm²	10 A / 18 AWG	
Rated short-time withstand current (1s)		120 A		
Rated voltage		800 V	600 V	
Impulse withstand voltage		8000 V		
Protection		IP20	NEMA 1	

Mounting instructions

Rail	TH 35-7.5, TH 35-15
Wire stripping length	9.5 mm 0.37 in
Tool	Flat screwdriver Ø 3.5 mm Ø 0.138 in
Torque	0.4 - 0.6 N.m 3.5 - 5.3 lb.in

The connecting capacity data for one Rigid: Solid/Stranded, or one Flexible conductor (when applicable) is a mandatory information required by IEC, UL and CSA standards (Copper conductors). All other data are provided as supplementary information only. For more details, please consult our CB, UL or CSA certificates and technical datasheet available on http://www.TE.com

RoHS — USR CNR — Gost R

Notes

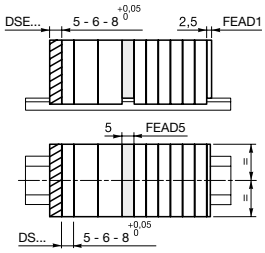

- End section FEAD1 to be mounted directly on the open part of the terminal block.
- End terminal block DSE has to be mounted at the end of the terminal blocks assembly: it reduces its size, because it suppresses the insulation rib (- 4 mm).
- Nota: This terminal block cannot be accidently located anywhere else into the terminal block assembly (without locking holes)
- Separator FEAD5 which snaps on the terminal blocks, separates and makes visible the different parts of the terminal blocks assembly.

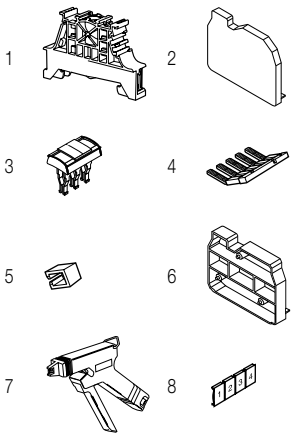

Accessories

	Description			Color	Type	Part Number		Pkg pce	Weight (1 pce) g
1	**End stops**	10 mm	0.394 in	Dark grey	BAM4	1SNK900001R0000		50	14.00
		5.2 mm	0.205 in		BAZ1	1SNK900002R0000		50	5.30
2	**End sections**	2.5 mm	0.098 in	Grey	FEAD1	1SNA199421R1600		20	1.30
3	**Jumper bars**	2 poles	13.5 A	Orange	BJADO5-2	1SNA205955R0300		20	1.00
		3 poles			BJADO5-3	1SNA205956R0400		20	1.00
		10 poles			BJADO5-10	1SNA205963R0300		10	5.00
4	**Lateral jumper bars**	2 poles	30 A	Grey	PC5-2	1SNA113542R1000		10	1.80
		10 poles			PC5-10	1SNA113544R1200		10	6.00
5	**Insulating tips**	For lateral jumper bars type PC...			EIP	1SNA113550R2400		10	
6	**Circuit separators**	5 mm	0.197 in	Grey	FEAD5	1SNA199433R1200		20	1.80
7	**Tools**	Semi automatic tool			OUPAD	1SNA178944R0400		1	205.00
		Hand tool			OUMAD	1SNA179466R0600		1	29.00
8	**Terminal block markers**	Blank card		White	RC55	1SNA230000R1200		1	2.90

Complete list of accessories is indicated in the terminal block datasheet.
Some accessories such as jumper bars may modify the terminal block's ratings: complete information in the accessories catalogue pages.

Technical data valid for copper conductors only.

DS4/6.ADO IDC terminal blocks

Miniblocks ADO - screw clamp - 6 mm 0.236 in spacing

1.5 mm²
16 AWG

1SNC163080F0014

DS4/6.ADO

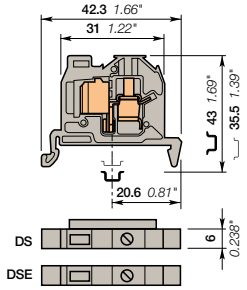

6 mm 0.236 in spacing

Description

- The mini blocks are particularly designed for applications where space is very restricted,
- With the TE Connectivity ADO System®, experience the fastest and most reliable connection on the market,
- This solution brings all the benefits of the ADO System® and allows installators to connect on standard screw clamp,
- Up to 2 wires per connection in the ADO System® connection.

Ordering details

Description		Color	Type	Part Number		Pkg pce	Weight (1 pce) g
Feed-through	With rib	Grey	DS4/6.ADO	1SNA299489R0700		100	5.00
	Without rib for TB assembly extremity	Grey	DSE4/6.ADO	1SNA299556R0100		20	5.00

Main technical data

		IEC	UL	CSA
ADO	Rigid: Solid/Stranded	0.28-1.5 mm²	22-16 AWG	
	Flexible without ferrule	0.34-1.5 mm²		
Screw clamp	Rigid: Solid/Stranded	0.2-4 mm²	22-10 AWG	
	Flexible without ferrule	0.22-4 mm²		
	Flexible with insulated ferrule			
	Gauge	A4		
Rated current / Rated cross section		17.5 A / 1.5 mm²	20 A / 16 AWG	
Rated short-time withstand current (1s)		180 A		
Rated voltage		800 V	600 V	
Impulse withstand voltage				
Protection		IP20	NEMA 1	

Mounting instructions

Rail	TH 35-7.5, TH 35-15
Wire stripping length	9.5 mm 0.37 in
Tool	Flat screwdriver Ø 4 mm Ø 0.157 in
Torque	0.5 - 0.8 N.m 4.4 - 7.1 lb.in

The connecting capacity data for one Rigid: Solid/Stranded, or one Flexible conductor (when applicable) is a mandatory information required by IEC, UL and CSA standards (Copper conductors). All other data are provided as supplementary information only. For more details, please consult our CB, UL or CSA certificates and technical datasheet available on http://www.TE.com

RoHS RoHS · USR CNR · Gost R

Notes

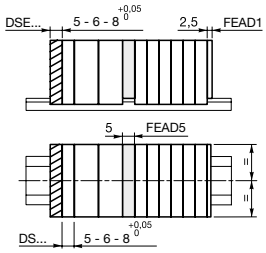

- End section FEAD1 to be mounted directly on the open part of the terminal block.
- End terminal block DSE has to be mounted at the end of the terminal blocks assembly: it reduces its size, because it suppresses the insulation rib (- 4 mm).
- Nota: This terminal block cannot be accidently located anywhere else into the terminal block assembly (without locking holes)
- Separator FEAD5 which snaps on the terminal blocks, separates and makes visible the different parts of the terminal blocks assembly.

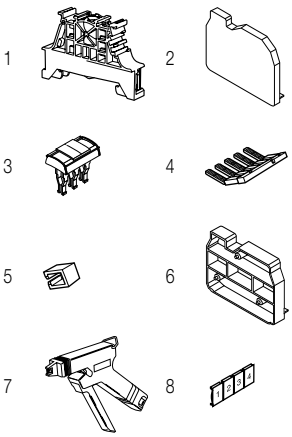

Accessories

	Description			Color	Type	Part Number		Pkg pce	Weight (1 pce) g
1	**End stops**	10 mm	0.394 in	Dark grey	BAM4	1SNK900001R0000		50	14.00
		5.2 mm	0.205 in		BAZ1	1SNK900002R0000		50	5.30
2	**End sections**	2.5 mm	0.098 in	Grey	FEAD1	1SNA199421R1600		20	1.30
3	**Jumper bars**	2 poles	17.5 A	Orange	BJADO6-2	1SNA205974R0600		20	1.00
		3 poles			BJADO6-3	1SNA205975R0700		20	1.00
		10 poles			BJADO6-10	1SNA205982R2700		10	6.00
4	**Lateral jumper bars**	2 poles	35 A	Grey	PC6-2	1SNA113546R1400		10	2.00
		3 poles			PC6-3	1SNA116536R0500		10	2.00
		4 poles			PC6-4	1SNA116537R0600		10	1.00
		10 poles			PC6-10	1SNA113548R2600		10	8.00
5	**Insulating tips**	For lateral jumper bars type PC...			EIP	1SNA113550R2400		10	
6	**Circuit separators**	5 mm	0.197 in	Grey	FEAD5	1SNA199433R1200		20	1.80
7	**Tools**	Semi automatic tool			OUPAD	1SNA178944R0400		1	205.00
		Hand tool			OUMAD	1SNA179466R0600		1	29.00
8	**Terminal block Markers**	Blank card		White	RC65	1SNA232000R0000		1	3.60

Complete list of accessories is indicated in the terminal block datasheet.
Some accessories such as jumper bars may modify the terminal block's ratings: complete information in the accessories catalogue pages.

Technical data valid for copper conductors only.

1SNC163028S0201 - Rev. A

DS4/8.ADO IDC terminal blocks

Miniblocks ADO - screw clamp - 8 mm 0.315 in spacing

DS4/8.ADO

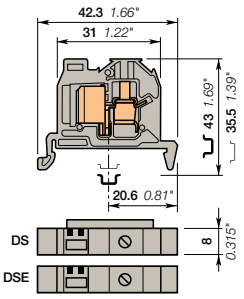

8 mm 0.315 in spacing

2.5 mm²
14 AWG

Description

- The mini blocks are particularly designed for applications where space is very restricted,
- With the TE Connectivity ADO System®, experience the fastest and most reliable connection on the market,
- This solution brings all the benefits of the ADO System® and allows installators to connect on standard screw clamp,
- Up to 2 wires per connection in the ADO System® connection.

Ordering details

Description		Color	Type	Part Number		Pkg pce	Weight (1 pce) g
Feed-through	With rib and 2 notches for wire size 1-2.5 mm² (16-14 AWG)	Grey	DS4/8.ADO	1SNA299493R2300		100	7.00
	Without rib for TB assembly extremity and 2 notches for wire size 1-2.5 mm² (16-14 AWG)	Grey	DSE4/8.ADO	1SNA299557R0200		20	7.00

Main technical data

		IEC	UL	CSA
ADO	Rigid: Solid/Stranded	1-2.5 mm²	16-14 AWG	
	Flexible without ferrule	1-2.5 mm²		
Screw clamp	Rigid: Solid/Stranded	0.2-4 mm²	22-10 AWG	
	Flexible without ferrule	0.22-4 mm²		
	Flexible with insulated ferrule			
	Gauge	A4		
Rated current / Rated cross section		24 A / 2.5 mm²	25 A / 14 AWG	
Rated short-time withstand current (1s)		300 A		
Rated voltage		1000 V	600 V	
Impulse withstand voltage				
Protection		IP20	NEMA 1	

The connecting capacity data for one Rigid: Solid/Stranded, or one Flexible conductor (when applicable) is a mandatory information required by IEC, UL and CSA standards (Copper conductors). All other data are provided as supplementary information only. For more details, please consult our CB, UL or CSA certificates and technical datasheet available on http://www.TE.com

RoHS RoHS | USR CNR | Gost R

Mounting instructions

Rail	TH 35-7.5, TH 35-15
Wire stripping length	9.5 mm 0.37 in
Tool	Flat screwdriver Ø 4 mm Ø 0.157 in
Torque	0.5 - 0.8 N.m 4.4 - 7.1 lb.in

Notes

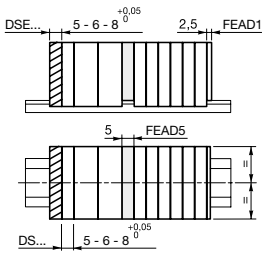

- End section FEAD1 to be mounted directly on the open part of the terminal block.
- End terminal block DSE has to be mounted at the end of the terminal blocks assembly: it reduces its size, because it suppresses the insulation rib (- 4 mm).
- Nota: This terminal block cannot be accidently located anywhere else into the terminal block assembly (without locking holes)
- Separator FEAD5 which snaps on the terminal blocks, separates and makes visible the different parts of the terminal blocks assembly.

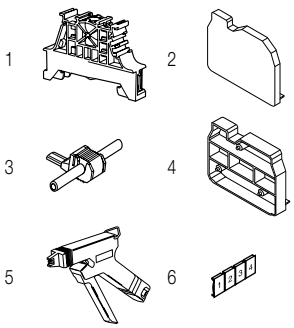

Accessories

	Description			Color	Type	Part Number		Pkg pce	Weight (1 pce) g
1	**End stops**	10 mm	0.394 in	Dark grey	BAM4	1SNK900001R0000		50	14.00
		5.2 mm	0.205 in		BAZ1	1SNK900002R0000		50	5.30
2	**End sections**	2.5 mm	0.098 in	Grey	FEAD1	1SNA199421R1600		20	1.30
3	**Jumper bars**	1 poles	24 A	Grey	AD2.5	1SNA114205R2000		50	1.60
4	**Circuit separators**	5 mm	0.197 in	Grey	FEAD5	1SNA199433R1200		20	1.80
5	**Tools**	Semi automatic tool			OUPAD	1SNA178944R0400		1	205.00
		Hand tool			OUMAD	1SNA179466R0600		1	29.00
6	**Terminal block markers**	Blank card			RCAL85	1SNA237000R0500		1	2.90

Complete list of accessories is indicated in the terminal block datasheet.
Some accessories such as jumper bars may modify the terminal block's ratings: complete information in the accessories catalogue pages.

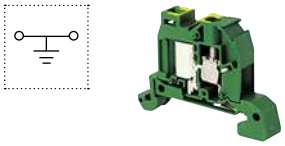

Ground IDC terminal blocks

Description		Color	Type	Part Number		Pkg pce	Weight (1 pce) g
Ground	Profile aligned with DS4/8.ADO	Green-yellow	DS4/8.P.ADO	1SNA199527R1000		100	8.00

Technical data valid for copper conductors only.

6

1SNC163029S0201 - Rev. A

DS4/8.P.ADO IDC terminal blocks

Miniblocks ADO - screw clamp - 8 mm 0.315 in spacing

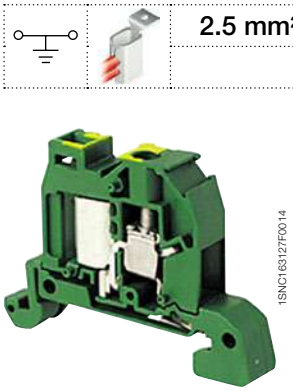

DS4/8.P.ADO

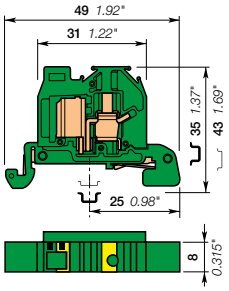

8 mm 0.315 in spacing

Description

- The mini blocks are particularly designed for applications where space is very restricted,
- Protect your installation in the event of a short-circuit thanks to our screwless rail contact non operator dependent,
- Secure mounting or removal from the rail,
- This solution brings all the benefits of the ADO System® and allows installators to connect on standard screw clamp,
- Up to 2 wires per connection in the ADO System® connection.

Ordering details

Description		Color	Type	Part Number		Pkg pce	Weight (1 pce) g
Ground	With 2 notches for wire size 1-2.5 mm² (16-14 AWG)	Green-yellow	DS4/8.P.ADO	1SNA199527R1000		100	8.00

Main technical data

		IEC	UL	CSA
ADO	Rigid: Solid/Stranded	1-2.5 mm²		
	Flexible without ferrule			
Screw clamp	Rigid: Solid/Stranded	0.2-4 mm²		
	Flexible without ferrule			
	Flexible with insulated ferrule			
	Gauge	A4		
Rated cross section		2.5 mm²		
Rated short-time withstand current (1s)		300 A		
Protection		IP20	NEMA 1	

Mounting instructions

Rail		TH 35-7.5, TH 35-15
Wire stripping length		9.5 mm 0.37 in
Tool		Flat screwdriver Ø 4 mm Ø 0.157 in
Torque		0.5 - 0.8 N.m 4 - 7.1 lb.in

The connecting capacity data for one Rigid: Solid/Stranded, or one Flexible conductor (when applicable) is a mandatory information required by IEC, UL and CSA standards (Copper conductors). All other data are provided as supplementary information only. For more details, please consult our CB, UL or CSA certificates and technical datasheet available on http://www.TE.com

RoHS RoHS | Gost R

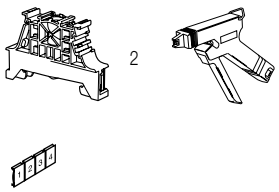

Accessories

	Description			Color	Type	Part Number		Pkg pce	Weight (1 pce) g
1	**End stops**	10 mm	0.394 in	Dark grey	BAM4	1SNK900001R0000		50	14.00
		5.2 mm	0.205 in		BAZ1	1SNK900002R0000		50	5.30
2	**Tools**	Semi automatic tool			OUPAD	1SNA178944R0400		1	205.00
		Hand tool			OUMAD	1SNA179466R0600		1	29.00
3	**Terminal block markers**	Blank card			RCAL85	1SNA237000R0500		1	2.90

Complete list of accessories is indicated in the terminal block datasheet.
Some accessories such as jumper bars may modify the terminal block's ratings: complete information in the accessories catalogue pages.

Technical data valid for copper conductors only.

1SNC163030S0201 - Rev. A

DR2.5/5.ADO IDC terminal blocks

Miniblocks ADO - screw clamp - 5 mm 0.197 in spacing

DR2.5/5.ADO

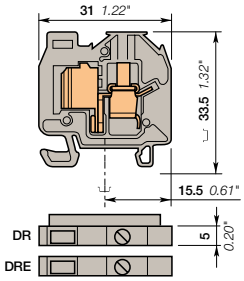

5 mm 0.197 in spacing

1 mm²
18 AWG

Description

- The mini blocks are particularly designed for applications where space is very restricted,
- With the TE Connectivity ADO System®, experience the fastest and most reliable connection on the market,
- This solution brings all the benefits of the ADO System® and allows installators to connect on standard screw clamp,
- Up to 2 wires per connection in the ADO System® connection.

Ordering details

Description		Color	Type	Part Number		Pkg pce	Weight (1 pce) g
Feed-through	With rib	Grey	DR2.5/5.ADO	1SNA399509R1700		100	4.00
	Without rib for TB assembly extremity	Grey	DRE2.5/5.ADO	1SNA399513R2200		20	4.00

Main technical data

		IEC	UL	CSA
ADO	Rigid: Solid/Stranded	0.2-1 mm²	24-18 AWG	
	Flexible without ferrule	0.22-1 mm²		
Screw clamp	Rigid: Solid/Stranded	0.2-4 mm²	24-12 AWG	
	Flexible without ferrule	0.22-2.5 mm²		
	Flexible with insulated ferrule			
	Gauge	A3		
Rated current / Rated cross section		13.5 A / 1 mm²	10 A / 18 AWG	
Rated short-time withstand current (1s)		120 A		
Rated voltage		800 V	600 V	
Impulse withstand voltage		8000 V		
Protection		IP20	NEMA 1	

Mounting instructions

Rail	TH 15-5.5
Wire stripping length	9.5 mm 0.374 in
Tool	Flat screwdriver Ø 3.5 mm Ø 0.138 in
Torque	0.4 - 0.6 N.m 3.5 - 5.3 lb.in

The connecting capacity data for one Rigid: Solid/Stranded, or one Flexible conductor (when applicable) is a mandatory information required by IEC, UL and CSA standards (Copper conductors). All other data are provided as supplementary information only. For more details, please consult our CB, UL or CSA certificates and technical datasheet available on http://www.TE.com

RoHS RoHS · USR CNR · Gost R

Notes

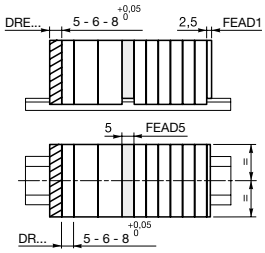

- End section FEAD1 to be mounted directly on the open part of the terminal block.
- End terminal block DRE has to be mounted at the end of the terminal blocks assembly: it reduces its size, because it suppresses the insulation rib (- 4 mm).
- Nota: This terminal block cannot be accidently located anywhere else into the terminal block assembly (without locking holes)
- Separator FEAD5 which snaps on the terminal blocks, separates and makes visible the different parts of the terminal blocks assembly.

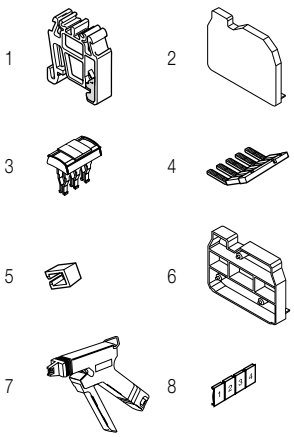

Accessories

	Description			Color	Type	Part Number		Pkg pce	Weight (1 pce) g
1	**End stops**	6.5 mm	0.256 in	Grey	BADRL	1SNA199420R2100		50	2.00
2	**End sections**	2.5 mm	0.098 in	Grey	FEAD1	1SNA199421R1600		20	1.30
3	**Jumper bars**	2 poles	13.5 A	Orange	BJADO5-2	1SNA205955R0300		20	1.00
		3 poles			BJADO5-3	1SNA205956R0400		20	1.00
		10 poles			BJADO5-10	1SNA205963R0300		10	5.00
4	**Lateral jumper bars**	2 poles	30 A	Grey	PC5-2	1SNA113542R1000		10	1.80
		10 poles			PC5-10	1SNA113544R1200		10	6.00
5	**Insulating tips**	For lateral jumper bars type PC...			EIP	1SNA113550R2400		10	
6	**Circuit separators**	5 mm	0.197 in	Grey	FEAD5	1SNA199433R1200		20	1.80
7	**Tools**	Semi automatic tool			OUPAD	1SNA178944R0400		1	205.00
		Hand tool			OUMAD	1SNA179466R0600		1	29.00
8	**Terminal block markers**	Blank card		White	RC55	1SNA230000R1200		1	2.90

Complete list of accessories is indicated in the terminal block datasheet.
Some accessories such as jumper bars may modify the terminal block's ratings: complete information in the accessories catalogue pages.

Technical data valid for copper conductors only.

1SNC163031S0201 - Rev. A

DR4/6.ADO IDC terminal blocks

Miniblocks ADO - screw clamp - 6 mm 0.236 in spacing

1SNC163073F0014

DR4/6.ADO

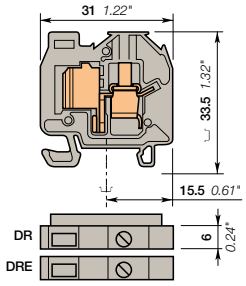

6 mm 0.236 in spacing

Description

- The mini blocks are particularly designed for applications where space is very restricted,
- With the TE Connectivity ADO System®, experience the fastest and most reliable connection on the market,
- This solution brings all the benefits of the ADO System® and allows installators to connect on standard screw clamp,
- Up to 2 wires per connection in the ADO System® connection.

Ordering details

Description		Color	Type	Part Number		Pkg pce	Weight (1 pce) g
Feed-through	With rib	Grey	DR4/6.ADO	1SNA199275R0300		100	5.00
	Without rib for TB assembly extremity	Grey	DRE4/6.ADO	1SNA299552R0500		20	5.00

Main technical data

		IEC	UL	CSA
ADO	Rigid: Solid/Stranded	0.28-1.5 mm²	22-16 AWG	
	Flexible without ferrule	0.34-1.5 mm²		
Screw clamp	Rigid: Solid/Stranded	0.2-4 mm²	22-10 AWG	
	Flexible without ferrule	0.22-4 mm²		
	Flexible with insulated ferrule			
	Gauge	A4		
Rated current / Rated cross section		17.5 A / 1.5 mm²	20 A / 16 AWG	
Rated short-time withstand current (1s)		180 A		
Rated voltage		800 V	600 V	
Impulse withstand voltage		8000 V		
Protection		IP20	NEMA 1	

Mounting instructions

Rail		TH 15-5.5
Wire stripping length		9.5 mm 0.374 in
Tool		Flat screwdriver Ø 4 mm Ø 0.157 in
Torque		0.5 - 0.8 N.m 4.4 - 7.1 lb.in

The connecting capacity data for one Rigid: Solid/Stranded, or one Flexible conductor (when applicable) is a mandatory information required by IEC, UL and CSA standards (Copper conductors). All other data are provided as supplementary information only. For more details, please consult our CB, UL or CSA certificates and technical datasheet available on http://www.TE.com

RoHS RoHS · USR CNR · Gost R

Notes

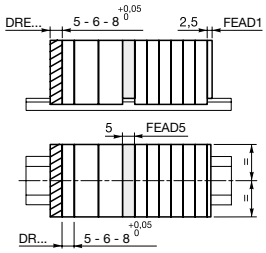

- End section FEAD1 to be mounted directly on the open part of the terminal block.
- End terminal block DRE has to be mounted at the end of the terminal blocks assembly: it reduces its size, because it suppresses the insulation rib (- 4 mm).
- Nota: This terminal block cannot be accidently located anywhere else into the terminal block assembly (without locking holes)
- Separator FEAD5 which snaps on the terminal blocks, separates and makes visible the different parts of the terminal blocks assembly.

Accessories

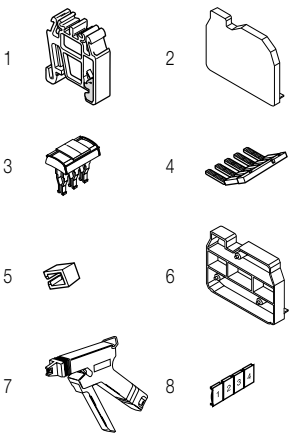

	Description			Color	Type	Part Number		Pkg pce	Weight (1 pce) g
1	**End stops**	6.5 mm	0.256 in	Grey	BADRL	1SNA199420R2100		50	2.00
2	**End sections**	2.5 mm	0.098 in	Grey	FEAD1	1SNA199421R1600		20	1.30
3	**Jumper bars**	2 poles	17.5 A	Orange	BJADO6-2	1SNA205974R0600		20	1.00
		3 poles			BJADO6-3	1SNA205975R0700		20	1.00
		10 poles			BJADO6-10	1SNA205982R2700		10	6.00
4	**Lateral jumper bars**	2 poles	35 A	Grey	PC6-2	1SNA113546R1400		10	2.00
		3 poles			PC6-3	1SNA116536R0500		10	2.00
		4 poles			PC6-4	1SNA116537R0600		10	1.00
		10 poles			PC6-10	1SNA113548R2600		10	8.00
5	**Insulating tips**	For lateral jumper bars type PC...			EIP	1SNA113550R2400		10	
6	**Circuit separators**	5 mm	0.197 in	Grey	FEAD5	1SNA199433R1200		20	1.80
7	**Tools**	Semi automatic tool			OUPAD	1SNA178944R0400		1	205.00
		Hand tool			OUMAD	1SNA179466R0600		1	29.00
8	**Terminal block markers**	Blank card		White	RC65	1SNA232000R0000		1	3.60

Complete list of accessories is indicated in the terminal block datasheet.
Some accessories such as jumper bars may modify the terminal block's ratings: complete information in the accessories catalogue pages.

Technical data valid for copper conductors only.

1SNC163032S0201 - Rev. A

DR4/8.ADO IDC terminal blocks

Miniblocks ADO - screw clamp - 8 mm 0.315 in spacing

DR4/8.ADO

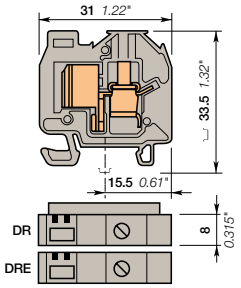

8 mm 0.315 in spacing

	2.5 mm²
	14 AWG

Description

- The mini blocks are particularly designed for applications where space is very restricted,
- With the TE Connectivity ADO System®, experience the fastest and most reliable connection on the market,
- This solution brings all the benefits of the ADO System® and allows installators to connect on standard screw clamp,
- Up to 2 wires per connection in the ADO System® connection.

Ordering details

Description		Color	Type	Part Number		Pkg pce	Weight (1 pce) g
Feed-through	With rib and 2 notches for wire size 1-2.5 mm² (16-14 AWG)	Grey	DR4/8.ADO	1SNA199279R1700		100	7.00

Main technical data

		IEC	UL	CSA
ADO	Rigid: Solid/Stranded	1-2.5 mm²	16-14 AWG	
	Flexible without ferrule	1-2.5 mm²		
Screw clamp	Rigid: Solid/Stranded	0.2-4 mm²	22-10 AWG	
	Flexible without ferrule	0.22-4 mm²		
	Flexible with insulated ferrule			
	Gauge	A4		
Rated current / Rated cross section		24 A / 2.5 mm²	25 A / 14 AWG	
Rated short-time withstand current (1s)		300 A		
Rated voltage		1000 V	600 V	
Impulse withstand voltage		8000 V		
Protection		IP20	NEMA 1	

Mounting instructions

Rail	TH 15-5.5
Wire stripping length	9.5 mm 0.374 in
Tool	Flat screwdriver Ø 4 mm Ø 0.157 in
Torque	0.5 - 0.8 N.m 4.4 - 7.1 lb.in

The connecting capacity data for one Rigid: Solid/Stranded, or one Flexible conductor (when applicable) is a mandatory information required by IEC, UL and CSA standards (Copper conductors). All other data are provided as supplementary information only. For more details, please consult our CB, UL or CSA certificates and technical datasheet available on http://www.TE.com

RoHS USR CNR Gost R

Notes

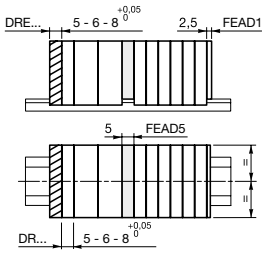

- End section FEAD1 to be mounted directly on the open part of the terminal block.
- End terminal block DRE has to be mounted at the end of the terminal blocks assembly: it reduces its size, because it suppresses the insulation rib (- 4 mm).
- Nota: This terminal block cannot be accidently located anywhere else into the terminal block assembly (without locking holes)
- Separator FEAD5 which snaps on the terminal blocks, separates and makes visible the different parts of the terminal blocks assembly.

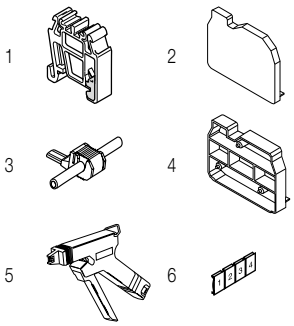

Accessories

	Description			Color	Type	Part Number		Pkg pce	Weight (1 pce) g
1	**End stops**	6.5 mm	0.256 in	Grey	BADRL	1SNA199420R2100		50	2.00
2	**End sections**	2.5 mm	0.098 in	Grey	FEAD1	1SNA199421R1600		20	1.30
3	**Jumper bars**	1 poles	24 A	Grey	AD2.5	1SNA114205R2000		50	1.60
4	**Circuit separators**	5 mm	0.197 in	Grey	FEAD5	1SNA199433R1200		20	1.80
5	**Tools**	Semi automatic tool			OUPAD	1SNA178944R0400		1	205.00
		Hand tool			OUMAD	1SNA179466R0600		1	29.00
6	**Terminal block markers**	Blank card			RCAL85	1SNA237000R0500		1	2.90

Complete list of accessories is indicated in the terminal block datasheet.
Some accessories such as jumper bars may modify the terminal block's ratings: complete information in the accessories catalogue pages.

Ground IDC terminal blocks

Description		Color	Type	Part Number		Pkg pce	Weight (1 pce) g
Ground	Profile aligned with DR4/8.ADO	Green-yellow	DR4/8.P.ADO	1SNA299632R0500		100	8.00

Technical data valid for copper conductors only.

1SNC163033S0201 - Rev. A

DR4/8.P.ADO IDC Terminal Blocks

Miniblocks ADO - screw clamp - 8 mm 0.315 in Spacing

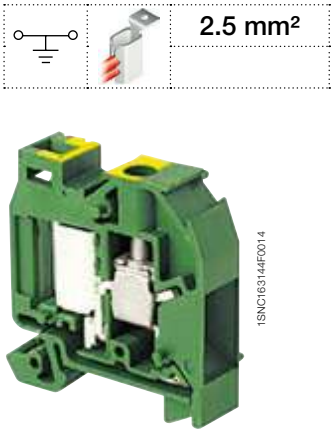

DR4/8.P.ADO

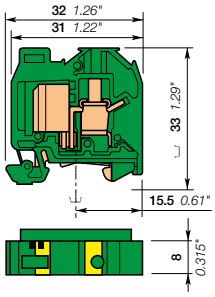

8 mm 0.315 in Spacing

2.5 mm²

Description

- The mini blocks are particularly designed for applications where space is very restricted,
- Protect your installation in the event of a short-circuit thanks to our screwless rail contact non operator dependent,
- Secure mounting or removal from the rail,
- This solution brings all the benefits of the ADO System® and allows installators to connect on standard screw clamp,
- Up to 2 wires per connection in the ADO System® connection.

Ordering Details

Description		Color	Type	Part Number		Pkg pce	Weight (1 pce) g
Ground	Ground with 2 notches for wire size 1-2.5 mm² (16-14 AWG)	Green-Yellow	DR4/8.P.ADO	1SNA299632R0500		100	8.00

Main Technical Data

		IEC	UL	CSA
ADO	Rigid: Solid/Stranded	1-2.5 mm²		
	Flexible without ferrule	1-2.5 mm²		
Screw clamp	Rigid: Solid/Stranded	0.2-4 mm²		
	Flexible without ferrule	0.22-4 mm²		
	Flexible with insulated ferrule			
	Gauge	A4		
Rated cross section		2.5 mm²		
Rated short-time withstand current (1s)		300 A		
Protection			NEMA	

Mounting Instructions

Rail	TH 15-5.5
Wire stripping length	9.5 mm 0.374 in
Tool	Flat screwdriver Ø 4 mm Ø 0.157 in
Torque	0.5 - 0.8 N.m 4.4 - 7.1 lb.in

The connecting capacity data for one Rigid: Solid/Stranded, or one Flexible conductor (when applicable) is a mandatory information required by IEC, UL and CSA standards (Copper conductors). All other data are provided as supplementary information only. For more details, please consult our CB, UL or CSA certificates and technical datasheet available on http://www.TE.com

RoHS RoHS Gost R

Accessories

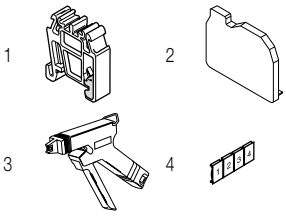

	Description			Color	Type	Part Number		Pkg pce	Weight (1 pce) g
1	**End Stops**	6.5 mm	0.256 in	Grey	BADRL	1SNA199420R2100		50	2.00
2	**End Sections**	2.5 mm	0.098 in	Grey	FEAD1	1SNA199421R1600		20	1.30
3	**Tools**	Semi automatic tool			OUPAD	1SNA178944R0400		1	205.00
		Hand tool			OUMAD	1SNA179466R0600		1	29.00
4	**Terminal block markers**	Blank card			RCAL85	1SNA237000R0500		1	2.90

Complete list of accessories is indicated in the terminal block datasheet.
Some accessories such as jumper bars may modify the terminal block's ratings: complete information in the accessories catalogue pages.

Technical data valid for copper conductors only.

DB2.5/5.ADO IDC terminal blocks

Miniblocks ADO - screw clamp - 5 mm 0.197 in spacing

DB2.5/5.ADO

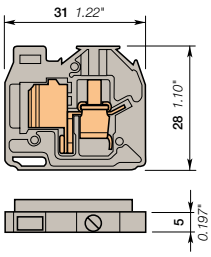

5 mm 0.197 in spacing

	1 mm²
	18 AWG

Description

- The mini blocks are particularly designed for applications where space is very restricted,
- With the TE Connectivity ADO System®, experience the fastest and most reliable connection on the market,
- This solution brings all the benefits of the ADO System® and allows installators to connect on standard screw clamp,
- Easy base mounting thanks to the usage of flanges,
- Up to 2 wires per connection in the ADO System® connection.

Ordering details

Description	Color	Type	Part Number		Pkg pce	Weight (1 pce) g
Feed-through	Grey	DB2.5/5.ADO	1SNA399519R0000		100	4.00

Main technical data

		IEC	UL	CSA
ADO	Rigid: Solid/Stranded	0.2-1 mm²	24-18 AWG	
	Flexible without ferrule	0.22-1 mm²		
Screw clamp	Rigid: Solid/Stranded	0.2-4 mm²	24-12 AWG	
	Flexible without ferrule	0.22-2.5 mm²		
	Flexible with insulated ferrule			
	Gauge	A3		
Rated current / Rated cross section		13.5 A / 1 mm²	10 A / 18 AWG	
Rated short-time withstand current (1s)		120 A		
Rated voltage		800 V	600 V	
Impulse withstand voltage		8000 V		
Protection		IP20	NEMA 1	

Mounting instructions

Rail		
Wire stripping length		9.5 mm 0.374 in
Tool		Flat screwdriver Ø 3.5 mm Ø 0.138 in
Torque		0.4 - 0.6 N.m 3.5 - 5.3 lb.in

The connecting capacity data for one Rigid: Solid/Stranded, or one Flexible conductor (when applicable) is a mandatory information required by IEC, UL and CSA standards (Copper conductors). All other data are provided as supplementary information only. For more details, please consult our CB, UL or CSA certificates and technical datasheet available on http://www.TE.com

RoHS RoHS · USR CNR · Gost R

Notes

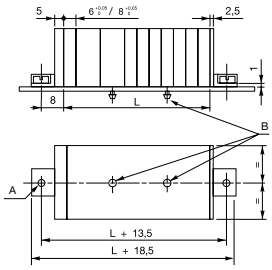

A: 2 holes DIA 3.2 mm for 3 mm screw max. with cylindrical head (not supplied).

L = (N blocks x 6) + (N blocks x 8)

Plate thickness 0.6 to 1.2 mm

Intermediate mounting of DH blocks every 2 blocks (spacing 8 mm) or 3 blocks (spacing 6 mm)

Accessories

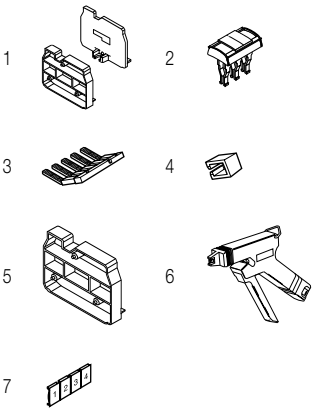

	Description			Color	Type	Part Number		Pkg pce	Weight (1 pce) g
1	**End section kits**			Grey	FEAD3	1SNA199437R1600		20	3.00
2	**Jumper bars**	2 poles	13.5 A	Orange	BJADO5-2	1SNA205955R0300		20	1.00
		3 poles			BJADO5-3	1SNA205956R0400		20	1.00
		10 poles			BJADO5-10	1SNA205963R0300		10	5.00
3	**Lateral jumper bars**	2 poles	30 A	Grey	PC5-2	1SNA113542R1000		10	1.80
		10 poles			PC5-10	1SNA113544R1200		10	6.00
4	**Insulating tips**	For lateral jumper bars type PC...			EIP	1SNA113550R2400		10	
5	**Circuit separators**	5 mm	0.197 in	Grey	FEAD5	1SNA199433R1200		20	1.80
6	**Tools**	Semi automatic tool			OUPAD	1SNA178944R0400		1	205.00
		Hand tool			OUMAD	1SNA179466R0600		1	29.00
7	**Terminal block markers**	Blank card		White	RC55	1SNA230000R1200		1	2.90

Complete list of accessories is indicated in the terminal block datasheet.
Some accessories such as jumper bars may modify the terminal block's ratings: complete information in the accessories catalogue pages.

Technical data valid for copper conductors only.

1SNC163035S0201 - Rev. A

DB4/6.ADO IDC terminal blocks

Miniblocks ADO - screw clamp - 6 mm 0.236 in spacing

1.5 mm²
16 AWG

DB4/6.ADO

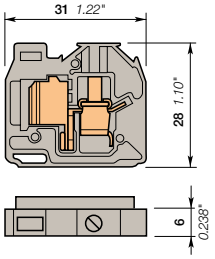

6 mm 0.236 in spacing

Description

- The mini blocks are particularly designed for applications where space is very restricted,
- With the TE Connectivity ADO System®, experience the fastest and most reliable connection on the market,
- This solution brings all the benefits of the ADO System® and allows installators to connect on standard screw clamp,
- Easy base mounting thanks to the usage of flanges,
- Up to 2 wires per connection in the ADO System® connection.

Ordering details

Description	Color	Type	Part Number		Pkg pce	Weight (1 pce) g
Feed-through	Grey	DB4/6.ADO	1SNA299505R0700		100	5.00

Main technical data

		IEC	UL	CSA
ADO	Rigid: Solid/Stranded	0.28-1.5 mm²	22-16 AWG	
	Flexible without ferrule	0.34-1.5 mm²	22-16 AWG	
Screw clamp	Rigid: Solid/Stranded	0.2-4 mm²	22-10 AWG	
	Flexible without ferrule	0.22-4 mm²		
	Flexible with insulated ferrule			
	Gauge	A4		
Rated current / Rated cross section		17.5 A / 1.5 mm²	20 A / 16 AWG	
Rated short-time withstand current (1s)		180 A		
Rated voltage		800 V	600 V	
Impulse withstand voltage		8000 V		
Protection		IP20	NEMA 1	

Mounting instructions

Rail		
Wire stripping length		9.5 mm 0.374 in
Tool		Flat screwdriver Ø 4 mm Ø 0.157 in
Torque		0.5 - 0.8 N.m 4.4 - 7.1 lb.in

The connecting capacity data for one Rigid: Solid/Stranded, or one Flexible conductor (when applicable) is a mandatory information required by IEC, UL and CSA standards (Copper conductors). All other data are provided as supplementary information only. For more details, please consult our CB, UL or CSA certificates and technical datasheet available on http://www.TE.com

RoHS / USR CNR / cCSAus / Gost R

Notes

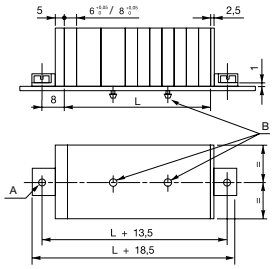

A: 2 holes DIA 3.2 mm for 3 mm screw max. with cylindrical head (not supplied)

L = (N blocks x 6) + (N blocks x 8)

Plate thickness 0.6 to 1.2 mm

Intermediate mounting of DH blocks every 2 blocks (spacing 8 mm) or 3 blocks (spacing 6 mm)

Accessories

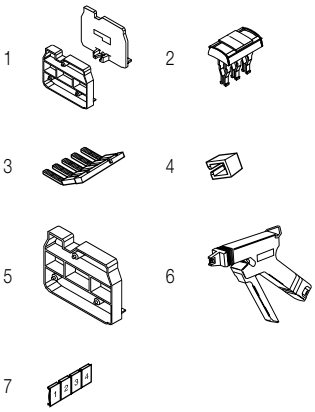

	Description			Color	Type	Part Number		Pkg pce	Weight (1 pce) g
1	End section kits			Grey	FEAD3	1SNA199437R1600		20	3.00
2	Jumper bars	2 poles	17.5 A	Orange	BJADO6-2	1SNA205974R0600		20	1.00
		3 poles			BJADO6-3	1SNA205975R0700		20	1.00
		10 poles			BJADO6-10	1SNA205982R2700		10	6.00
3	Lateral jumper bars	2 poles	35 A	Grey	PC6-2	1SNA113546R1400		10	2.00
		3 poles			PC6-3	1SNA116536R0500		10	2.00
		4 poles			PC6-4	1SNA116537R0600		10	1.00
		10 poles			PC6-10	1SNA113548R2600		10	8.00
4	Insulating tips	For lateral jumper bars type PC...			EIP	1SNA113550R2400		10	
5	Circuit separators	5 mm	0.197 in	Grey	FEAD5	1SNA199433R1200		20	1.80
6	Tools	Semi automatic tool			OUPAD	1SNA178944R0400		1	205.00
		Hand tool			OUMAD	1SNA179466R0600		1	29.00
7	Terminal block markers	Blank card		White	RC65	1SNA232000R0000		1	3.60

Complete list of accessories is indicated in the terminal block datasheet.
Some accessories such as jumper bars may modify the terminal block's ratings: complete information in the accessories catalogue pages.

Technical data valid for copper conductors only.

1SNC163036S0201 - Rev. A

DB4/8.ADO IDC terminal blocks

Miniblocks ADO - screw clamp - 8 mm 0.315 in spacing

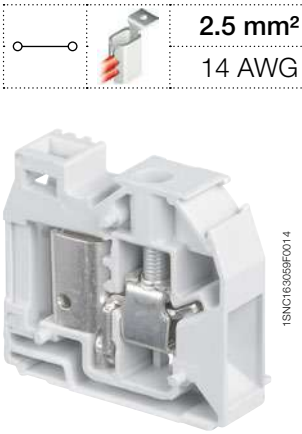

2.5 mm²
14 AWG

1SNC163059F0014

DB4/8.ADO

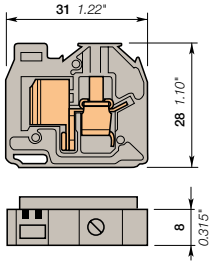

8 mm 0.315 in spacing

Description

- The mini blocks are particularly designed for applications where space is very restricted,
- With the TE Connectivity ADO System®, experience the fastest and most reliable connection on the market,
- This solution brings all the benefits of the ADO System® and allows installators to connect on standard screw clamp,
- Easy base mounting thanks to the usage of flanges,
- Up to 2 wires per connection in the ADO System® connection.

Ordering details

Description		Color	Type	Part Number		Pkg pce	Weight (1 pce) g
Feed-through	With 2 notches for wire size 1-2.5 mm² (16-14 AWG)	Grey	DB4/8.ADO	1SNA299509R1300		100	7.00

Main technical data

		IEC	UL	CSA
ADO	Rigid: Solid/Stranded	1-2.5 mm²	16-14 AWG	
	Flexible without ferrule	1-2.5 mm²		
Screw clamp	Rigid: Solid/Stranded	0.2-4 mm²	22-10 AWG	
	Flexible without ferrule	0.22-4 mm²		
	Flexible with insulated ferrule			
	Gauge	A4		
Rated current / Rated cross section		24 A / 2.5 mm²	25 A / 14 AWG	
Rated short-time withstand current (1s)		300 A		
Rated voltage		800 V	600 V	
Impulse withstand voltage		8000 V		
Protection		IP20	NEMA 1	

Mounting instructions

Rail		
Wire stripping length		9.5 mm 0.374 in
Tool		Flat screwdriver Ø 4 mm Ø 0.157 in
Torque		0.5 - 0.8 N.m 4.4 - 7.1 lb.in

The connecting capacity data for one Rigid: Solid/Stranded, or one Flexible conductor (when applicable) is a mandatory information required by IEC, UL and CSA standards (Copper conductors). All other data are provided as supplementary information only. For more details, please consult our CB, UL or CSA certificates and technical datasheet available on http://www.TE.com

RoHS — RoHS; USR CNR; Gost R

Notes

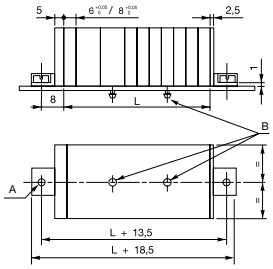

A: 2 holes DIA 3.2 mm for 3 mm screw max. with cylindrical head (not supplied)

L = (N blocks x 6) + (N blocks x 8)

Plate thickness 0.6 to 1.2 mm

Intermediate mounting of DH blocks every 2 blocks (spacing 8 mm) or 3 blocks (spacing 6 mm)

Accessories

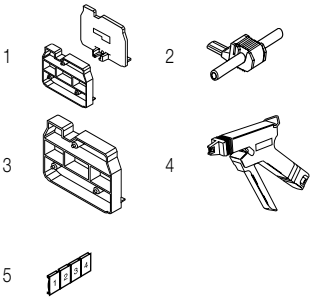

	Description			Color	Type	Part Number		Pkg pce	Weight (1 pce) g
1	**End section kits**			Grey	FEAD3	1SNA199437R1600		20	3.00
2	**Jumper bars**	1 poles	24 A	Grey	AD2.5	1SNA114205R2000		50	1.60
3	**Circuit separators**	5 mm	0.197 in	Grey	FEAD5	1SNA199433R1200		20	1.80
4	**Tools**	Semi automatic tool			OUPAD	1SNA178944R0400		1	205.00
		Hand tool			OUMAD	1SNA179466R0600		1	29.00
5	**Terminal block markers**	Blank card			RCAL85	1SNA237000R0500		1	2.90

Complete list of accessories is indicated in the terminal block datasheet.
Some accessories such as jumper bars may modify the terminal block's ratings: complete information in the accessories catalogue pages.

Technical data valid for copper conductors only.

1SNC163037S0201 - Rev. A

DH4/6.ADO IDC terminal blocks

Miniblocks ADO - screw clamp - 6 mm 0.236 in spacing

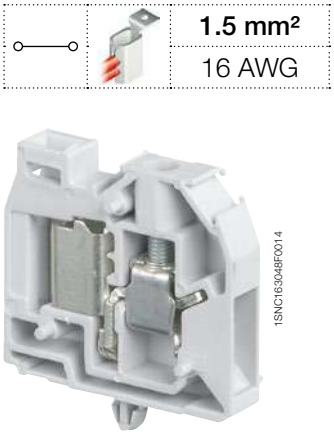

DH4/6.ADO

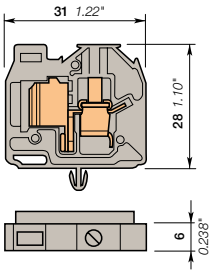

6 mm 0.236 in spacing

Description

- The mini blocks are particularly designed for applications where space is very restricted,
- With the TE Connectivity ADO System®, experience the fastest and most reliable connection on the market,
- This solution brings all the benefits of the ADO System® and allow installators to connect on standard screw clamp,
- Easy base mounting thanks to snap in mounting foot,
- Up to 2 wires per connection in the ADO System® connection.

Ordering details

Description	Color	Type	Part Number		Pkg pce	Weight (1 pce) g
Feed-through	Grey	DH4/6.ADO	1SNA299521R2600		100	5.00

Main technical data

		IEC	UL	CSA
ADO	Rigid: Solid/Stranded	0.28-1.5 mm²	22-16 AWG	
	Flexible without ferrule	0.34-1.5 mm²		
Screw clamp	Rigid: Solid/Stranded	0.2-4 mm²	22-10 AWG	
	Flexible without ferrule	0.22-4 mm²		
	Flexible with insulated ferrule			
	Gauge	A4		
Rated current / Rated cross section		17.5 A / 1.5 mm²	20 A / 16 AWG	
Rated short-time withstand current (1s)		180 A		
Rated voltage		800 V	600 V	
Impulse withstand voltage		8000 V		
Protection		IP20	NEMA 1	

Mounting instructions

Rail		
Wire stripping length		9.5 mm 0.374 in
Tool		Flat screwdriver Ø 4 mm Ø 0.157 in
Torque		0.5 - 0.8 N.m 4.4 - 7.1 lb.in

The connecting capacity data for one Rigid: Solid/Stranded, or one Flexible conductor (when applicable) is a mandatory information required by IEC, UL and CSA standards (Copper conductors). All other data are provided as supplementary information only. For more details, please consult our CB, UL or CSA certificates and technical datasheet available on http://www.TE.com

RoHS / USR CNR / Gost R

Notes

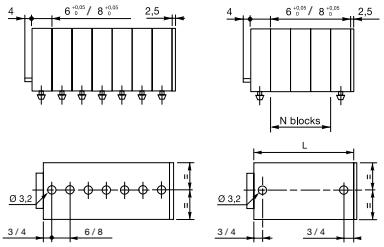

L = (N blocks x 6) + (N blocks x 8)

N blocks = 3 blocks max. with 6 mm spacing
2 blocks max. with 8 mm spacing

Plate thickness 0.6 to 1.2 mm

Accessories

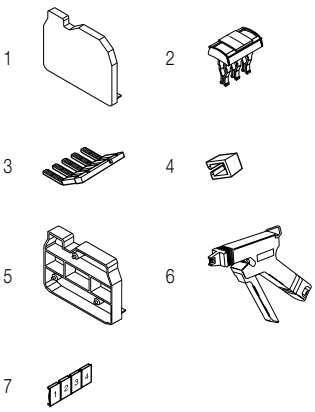

	Description			Color	Type	Part Number		Pkg pce	Weight (1 pce) g
1	End section			Grey	FEAD1	1SNA199421R1600		20	1.30
2	Jumper bars	2 poles	17.5 A	Orange	BJADO6-2	1SNA205974R0600		20	1.00
		3 poles			BJADO6-3	1SNA205975R0700		20	1.00
		10 poles			BJADO6-10	1SNA205982R2700		10	6.00
3	Lateral jumper bars	2 poles	35 A	Grey	PC6-2	1SNA113546R1400		10	2.00
		3 poles			PC6-3	1SNA116536R0500		10	2.00
		4 poles			PC6-4	1SNA116537R0600		10	1.00
		10 poles			PC6-10	1SNA113548R2600		10	8.00
4	Insulating tips	For lateral jumper bars type PC...			EIP	1SNA113550R2400		10	
5	Circuit separators	5 mm	0.197 in	Grey	FEAD5	1SNA199433R1200		20	1.80
6	Tools	Semi automatic tool			OUPAD	1SNA178944R0400		1	205.00
		Hand tool			OUMAD	1SNA179466R0600		1	29.00
7	Terminal block markers	Blank card		White	RC65	1SNA232000R0000		1	3.60

Complete list of accessories is indicated in the terminal block datasheet.
Some accessories such as jumper bars may modify the terminal block's ratings: complete information in the accessories catalogue pages.

Technical data valid for copper conductors only.

1SNC163038S0201 - Rev. A

DS1.5/6.ADO IDC terminal blocks

Miniblocks ADO-ADO - 6 mm 0.236 in spacing

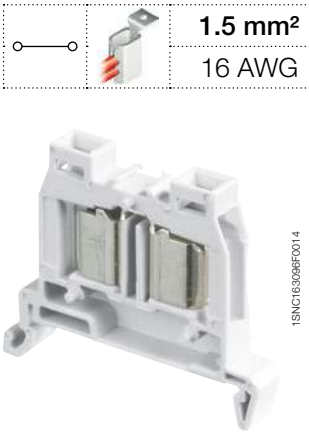

DS1.5/6.ADO

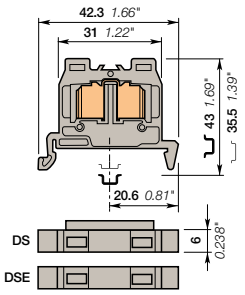

6 mm 0.236 in spacing

	1.5 mm²
	16 AWG

Description

- The mini blocks are particularly designed for applications where space is very restricted,
- With the TE Connectivity ADO System®, experience the fastest and most reliable connection on the market,
- Designed for control applications exposed to severe constrains (vibrations, shocks, corrosion etc.),
- Up to 2 wires per connection.

Ordering details

Description		Color	Type	Part Number		Pkg pce	Weight (1 pce) g
Feed-through	With rib	Grey	DS1.5/6.ADO	1SNA299497R2700		100	4.00
	Without rib for TB assembly extremity	Grey	DSE1.5/6.ADO	1SNA299558R1300		20	4.00

Main technical data

		IEC	UL	CSA
ADO	Rigid: Solid/Stranded	0.28-1.5 mm²	22-16 AWG	
	Flexible without ferrule	0.34-1.5 mm²		
Screw clamp	Rigid: Solid/Stranded			
	Flexible without ferrule			
	Flexible with insulated ferrule			
	Gauge			
Rated current / Rated cross section		17.5 A / 1.5 mm²	20 A / 16 AWG	
Rated short-time withstand current (1s)		180 A		
Rated voltage		1000 V	600 V	
Impulse withstand voltage				
Protection		IP20	NEMA 1	

Mounting instructions

Rail		TH 35-7.5, TH 35-15
Wire stripping length		
Tool		
Torque		

The connecting capacity data for one Rigid: Solid/Stranded Flexible conductor (when applicable) is a mandatory information required by IEC, UL and CSA standards (Copper conductors). All other data are provided as supplementary information only. For more details, please consult our CB, UL or CSA certificates and technical datasheet available on http://www.TE.com

RoHS RoHS | USR CNR | Gost R

Notes

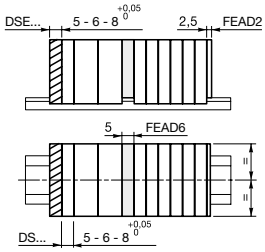

- End section FEAD2 to be mounted directly on the open part of the terminal block.
- End terminal block DSE has to be mounted at the end of the terminal blocks assembly: It reduces its size, because it suppresses the insulation rib (- 4 mm).
- Nota: This terminal block cannot be accidently located anywhere else into the terminal block assembly (without locking holes)
- Separator FEAD6 which snaps on the terminal blocks, separates and makes visible the different parts of the terminal blocks assembly.

Accessories

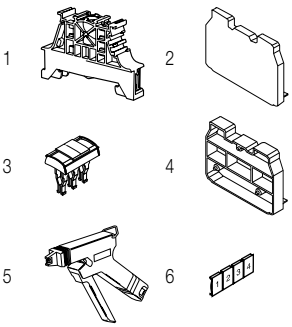

	Description			Color	Type	Part Number		Pkg pce	Weight (1 pce) g
1	**End stops**	10 mm	0.394 in	Dark grey	BAM4	1SNK900001R0000		50	14.00
		5.2 mm	0.205 in		BAZ1	1SNK900002R0000		50	5.30
2	**End sections**	2.5 mm	0.098 in	Grey	FEAD2	1SNA199423R1000		20	1.30
3	**Jumper bars**	2 poles	17.5 A	Orange	BJADO6-2	1SNA205974R0600		20	1.00
		3 poles			BJADO6-3	1SNA205975R0700		20	1.00
		10 poles			BJADO6-10	1SNA205982R2700		10	6.00
4	**Circuit separators**	5 mm	0.197 in	Grey	FEAD6	1SNA199435R1400		20	1.80
5	**Tools**	Semi automatic tool			OUPAD	1SNA178944R0400		1	205.00
		Hand tool			OUMAD	1SNA179466R0600		1	29.00
6	**Terminal block markers**	Blank card		White	RC65	1SNA232000R0000		1	3.60

Complete list of accessories is indicated in the terminal block datasheet.
Some accessories such as jumper bars may modify the terminal block's ratings: complete information in the accessories catalogue pages.

Technical data valid for copper conductors only.

1SNC163063S0201 Rev. A

DS2.5/8.ADO IDC terminal blocks

Miniblocks ADO-ADO - 8 mm 0.315 in spacing

2.5 mm²
14 AWG

1SNC163096F0014

DS2.5/8.ADO

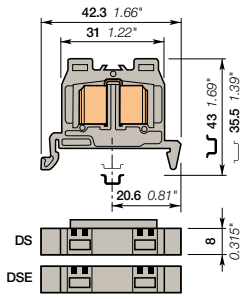

8 mm 0.315 in spacing

Description

- The mini blocks are particularly designed for applications where space is very restricted,
- With the TE Connectivity ADO System®, experience the fastest and most reliable connection on the market,
- Designed for control applications exposed to severe constrains (vibrations, shocks, corrosion etc.),
- Up to 2 wires per connection.

Ordering details

Description		Color	Type	Part Number		Pkg pce	Weight (1 pce) g
Feed-through	With rib and 2 notches for wire size 1-2.5 mm² (16-14 AWG)	Grey	DS2.5/8.ADO	1SNA299501R0300		100	6.00
	Without rib for TB assembly extremity and 2 notches for wire size 1-2.5 mm² (16-14 AWG)	Grey	DSE2.5/8.ADO	1SNA299559R1400		20	6.00

Main technical data

		IEC	UL	CSA
ADO	Rigid: Solid/Stranded	1-2.5 mm²	16-14 AWG	
	Flexible without ferrule	1-2.5 mm²		
Screw clamp	Rigid: Solid/Stranded			
	Flexible without ferrule			
	Flexible with insulated ferrule			
	Gauge			
Rated current / Rated cross section		24 A / 2.5 mm²	25 A / 14 AWG	
Rated short-time withstand current (1s)		300 A		
Rated voltage		1000 V	600 V	
Impulse withstand voltage				
Protection		IP20	NEMA 1	

Mounting instructions

Rail		TH 35-7.5, TH 35-15
Wire stripping length		
Tool		
Torque		

The connecting capacity data for one Rigid: Solid/Stranded, or one Flexible conductor (when applicable) is a mandatory information required by IEC, UL and CSA standards (Copper conductors). All other data are provided as supplementary information only. For more details, please consult our CB, UL or CSA certificates and technical datasheet available on http://www.TE.com

RoHS cCSAus Gost R

Notes

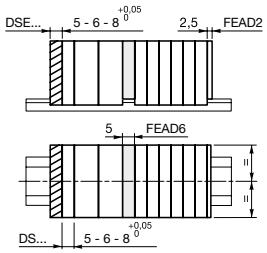

- End section FEAD2 to be mounted directly on the open part of the terminal block.
- End terminal block DSE has to be mounted at the end of the terminal blocks assembly: It reduces its size, because it suppresses the insulation rib (- 4 mm).
- Nota: This terminal block cannot be accidently located anywhere else into the terminal block assembly (without locking holes)
- Separator FEAD6 which snaps on the terminal blocks, separates and makes visible the different parts of the terminal blocks assembly.

Accessories

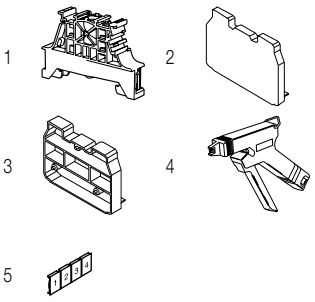

	Description			Color	Type	Part Number		Pkg pce	Weight (1 pce) g
1	**End stops**	10 mm	0.394 in	Dark grey	BAM4	1SNK900001R0000		50	14.00
		5.2 mm	0.205 in		BAZ1	1SNK900002R0000		50	5.30
2	**End sections**	2.5 mm	0.098 in	Grey	FEAD2	1SNA199423R1000		20	1.30
3	**Circuit separators**	5 mm	0.197 in	Grey	FEAD6	1SNA199435R1400		20	1.80
4	**Tools**	Semi automatic tool			OUPAD	1SNA178944R0400		1	205.00
		Hand tool			OUMAD	1SNA179466R0600		1	29.00
5	**Terminal block markers**	Blank card			RCAL85	1SNA237000R0500		1	2.90

Complete list of accessories is indicated in the terminal block datasheet.
Some accessories such as jumper bars may modify the terminal block's ratings: complete information in the accessories catalogue pages.

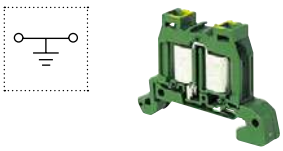

Ground IDC terminal blocks

Description		Color	Type	Part Number		Pkg pce	Weight (1 pce) g
Ground	Profile aligned with DS2.5/8.ADO	Green-yellow	DS2.5/8.P.ADO	1SNA199528R2100		100	10.00

Technical data valid for copper conductors only.

1SNC163064S0201 - Rev. A

DS2.5/8.P.ADO IDC terminal blocks

Miniblocks ADO-ADO - 8 mm 0.315 in spacing

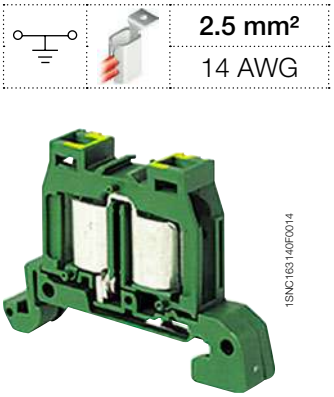

2.5 mm²
14 AWG

1SNC163140F0014

DS2.5/8.P.ADO

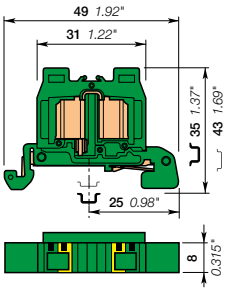

8 mm 0.315 in spacing

Description

- The mini blocks are particularly designed for applications where space is very restricted,
- Protect your installation in the event of a short-circuit thanks to our screwless rail contact non operator dependent,
- Secure mounting or removal from the rail,
- With the TE Connectivity ADO System®, experience the fastest and most reliable connection on the market,
- Up to 2 wires per connection.

Ordering details

Description		Color	Type	Part Number		Pkg pce	Weight (1 pce) g
Ground	With 2 notches for wire size 1-2.5 mm² (16-14 AWG)	Green-yellow	DS2.5/8.P.ADO	1SNA199528R2100		100	10.00

Main technical data

		IEC	UL	CSA
ADO	Rigid: Solid/Stranded	1-2.5 mm²	16-14 AWG	
	Flexible without ferrule	1-2.5 mm²		
Screw clamp	Rigid: Solid/Stranded			
	Flexible without ferrule			
	Flexible with insulated ferrule			
	Gauge			
Rated cross section		2.5 mm²	14 AWG	
Rated short-time withstand current (1s)		300 A		
Protection		IP20	NEMA 1	

Mounting instructions

Rail		TH 35-7.5, TH 35-15
Wire stripping length		
Tool		
Torque		

The connecting capacity data for one Rigid: Solid/Stranded, or one Flexible conductor (when applicable) is a mandatory information required by IEC, UL and CSA standards (Copper conductors). All other data are provided as supplementary information only. For more details, please consult our CB, UL or CSA certificates and technical datasheet available on http://www.TE.com

RoHS RoHS | cCSAus | Gost R

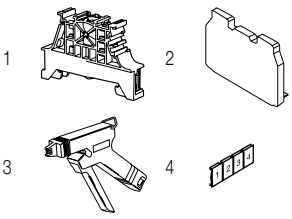

Accessories

	Description			Color	Type	Part Number		Pkg pce	Weight (1 pce) g
1	**End stops**	10 mm	0.394 in	Dark grey	BAM4	1SNK900001R0000		50	14.00
		5.2 mm	0.205 in		BAZ1	1SNK900002R0000		50	5.30
2	**End sections**	2.5 mm	0.098 in	Grey	FEAD2	1SNA199423R1000		20	1.30
3	**Tools**	Semi automatic tool			OUPAD	1SNA178944R0400		1	205.00
		Hand tool			OUMAD	1SNA179466R0600		1	29.00
4	**Terminal block markers**	Blank card			RCAL85	1SNA237000R0500		1	2.90

Complete list of accessories is indicated in the terminal block datasheet.
Some accessories such as jumper bars may modify the terminal block's ratings: complete information in the accessories catalogue pages.

Technical data valid for copper conductors only.

1SNC163065S0201 - Rev. A

DR1/5.ADO IDC terminal blocks

Miniblocks ADO-ADO - 5 mm 0.197 in spacing

1 mm²
18 AWG

DR1/5.ADO

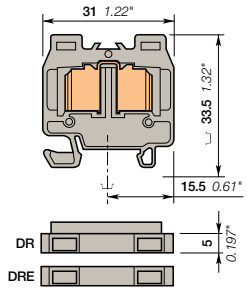

5 mm 0.197 in spacing

Description

- The mini blocks are particularly designed for applications where space is very restricted,
- With the TE Connectivity ADO System®, experience the fastest and most reliable connection on the market,
- Designed for control applications exposed to severe constrains (vibrations, shocks, corrosion etc.),
- Up to 2 wires per connection.

Ordering details

Description		Color	Type	Part Number		Pkg pce	Weight (1 pce) g
Feed-through	With rib	Grey	DR1/5.ADO	1SNA399491R2500		100	3.00
	Without rib for TB assembly extremity	Grey	DRE1/5.ADO	1SNA399495R2100		20	3.00

Main technical data

		IEC	UL	CSA
ADO	Rigid: Solid/Stranded	0.2-1 mm²	24-18 AWG	
	Flexible without ferrule	0.22-1 mm²		
Screw clamp	Rigid: Solid/Stranded			
	Flexible without ferrule			
	Flexible with insulated ferrule			
	Gauge			
Rated current / Rated cross section		13.5 A / 1 mm²	10 A / 18 AWG	
Rated short-time withstand current (1s)		120 A		
Rated voltage		1000 V	600 V	
Impulse withstand voltage		8000 V		
Protection		IP20	NEMA 1	

Mounting instructions

Rail		TH 15-5.5
Wire stripping length		
Tool		
Torque		

The connecting capacity data for one Rigid: Solid/Stranded, or one Flexible conductor (when applicable) is a mandatory information required by IEC, UL and CSA standards (Copper conductors). All other data are provided as supplementary information only. For more details, please consult our CB, UL or CSA certificates and technical datasheet available on http://www.TE.com

RoHS RoHS · USR CNR · Gost R

Notes

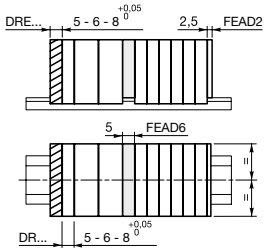

- End section FEAD1 to be mounted directly on the open part of the terminal block.
- End terminal block DRE has to be mounted at the end of the terminal blocks assembly: it reduces its size, because it suppresses the insulation rib (- 4 mm).
- Nota: This terminal block cannot be accidently located anywhere else into the terminal block assembly (without locking holes)
- Separator FEAD5 which snaps on the terminal blocks, separates and makes visible the different parts of the terminal blocks assembly.

Accessories

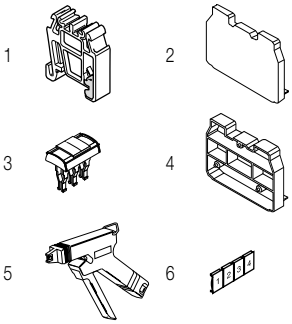

	Description			Color	Type	Part Number		Pkg pce	Weight (1 pce) g
1	**End stops**	6.5 mm	0.256 in	Grey	BADRL	1SNA199420R2100		50	2.00
2	**End sections**	2.5 mm	0.098 in	Grey	FEAD2	1SNA199423R1000		20	1.30
3	**Jumper bars**	2 poles	13.5 A	Orange	BJADO5-2	1SNA205955R0300		20	1.00
		3 poles			BJADO5-3	1SNA205956R0400		20	1.00
		10 poles			BJADO5-10	1SNA205963R0300		10	5.00
4	**Circuit separators**	5 mm	0.197 in	Grey	FEAD6	1SNA199435R1400		20	1.80
5	**Tools**	Semi automatic tool			OUPAD	1SNA178944R0400		1	205.00
		Hand tool			OUMAD	1SNA179466R0600		1	29.00
6	**Terminal block markers**	Blank card		White	RC55	1SNA230000R1200		1	2.90

Complete list of accessories is indicated in the terminal block datasheet.
Some accessories such as jumper bars may modify the terminal block's ratings: complete information in the accessories catalogue pages.

Technical data valid for copper conductors only.

1SNC163066S0201 - Rev. A

DR1.5/6.ADO IDC terminal blocks

Miniblocks ADO-ADO - 6 mm 0.236 in spacing

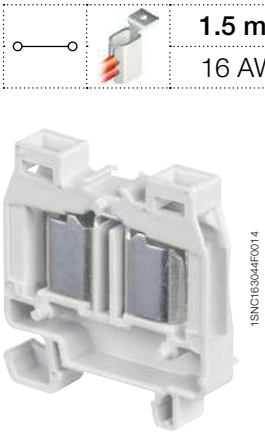

DR1.5/6.ADO

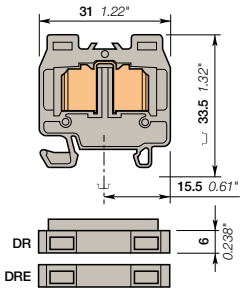

6 mm 0.236 in spacing

	1.5 mm²
	16 AWG

Description

- The mini blocks are particularly designed for applications where space is very restricted,
- With the TE Connectivity ADO System®, experience the fastest and most reliable connection on the market,
- Designed for control applications exposed to severe constrains (vibrations, shocks, corrosion etc.),
- Up to 2 wires per connection.

Ordering details

Description		Color	Type	Part Number		Pkg pce	Weight (1 pce) g
Feed-through	With rib	Grey	DR1.5/6.ADO	1SNA199283R2400		100	4.00
	Without rib for TB assembly extremity	Grey	DRE1.5/6.ADO	1SNA299554R0700		20	4.00

Main technical data

		IEC	UL	CSA
ADO	Rigid: Solid/Stranded	0.28-1.5 mm²	22-16 AWG	
	Flexible without ferrule	0.34-1.5 mm²	22-16 AWG	
Screw clamp	Rigid: Solid/Stranded			
	Flexible without ferrule			
	Flexible with insulated ferrule			
	Gauge			
Rated current / Rated cross section		17.5 A / 1.5 mm²	20 A / 16 AWG	
Rated short-time withstand current (1s)		180 A		
Rated voltage		1000 V	600 V	
Impulse withstand voltage		8000 V		
Protection		IP20	NEMA 1	

Mounting instructions

Rail		TH 15-5.5
Wire stripping length		
Tool		
Torque		

The connecting capacity data for one Rigid: Solid/Stranded, or one Flexible conductor (when applicable) is a mandatory information required by IEC, UL and CSA standards (Copper conductors). All other data are provided as supplementary information only. For more details, please consult our CB, UL or CSA certificates and technical datasheet available on http://www.TE.com

RoHS RoHS | cCSAus | Gost R

Notes

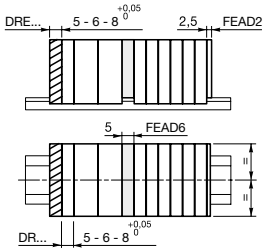

- End section FEAD1 to be mounted directly on the open part of the terminal block.
- End terminal block DRE has to be mounted at the end of the terminal blocks assembly: it reduces its size, because it suppresses the insulation rib (- 4 mm).
- Nota: This terminal block cannot be accidently located anywhere else into the terminal block assembly (without locking holes)
- Separator FEAD5 which snaps on the terminal blocks, separates and makes visible the different parts of the terminal blocks assembly.

Accessories

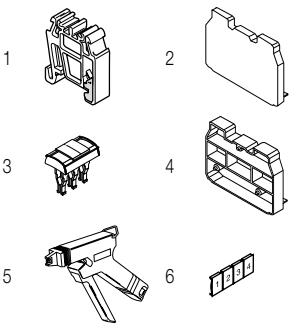

	Description			Color	Type	Part Number		Pkg pce	Weight (1 pce) g
1	**End stops**	6.5 mm	0.256 in	Grey	BADRL	1SNA199420R2100		50	2.00
2	**End sections**	2.5 mm	0.098 in	Grey	FEAD2	1SNA199423R1000		20	1.30
3	**Jumper bars**	2 poles	17.5 A	Orange	BJADO6-2	1SNA205974R0600		20	1.00
		3 poles			BJADO6-3	1SNA205975R0700		20	1.00
		10 poles			BJADO6-10	1SNA205982R2700		10	6.00
4	**Circuit separators**	5 mm	0.197 in	Grey	FEAD6	1SNA199435R1400		20	1.80
5	**Tools**	Semi automatic tool			OUPAD	1SNA178944R0400		1	205.00
		Hand tool			OUMAD	1SNA179466R0600		1	29.00
6	**Terminal block markers**	Blank card		White	RC65	1SNA232000R0000		1	3.60

Complete list of accessories is indicated in the terminal block datasheet.
Some accessories such as jumper bars may modify the terminal block's ratings: complete information in the accessories catalogue pages.

Technical data valid for copper conductors only.

1SNC163067S0201 - Rev. A

DR2.5/8.ADO IDC terminal blocks

Miniblocks ADO-ADO - 8 mm 0.315 in spacing

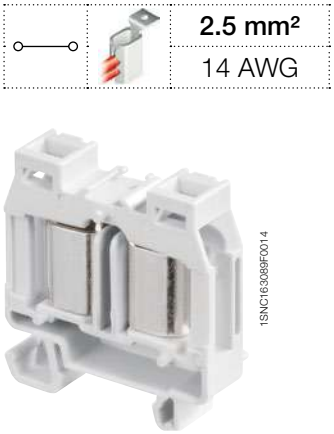

DR2.5/8.ADO

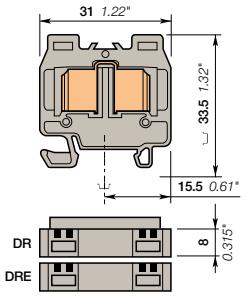

8 mm 0.315 in spacing

2.5 mm²
14 AWG

Description

- The mini blocks are particularly designed for applications where space is very restricted,
- With the TE Connectivity ADO System®, experience the fastest and most reliable connection on the market,
- Designed for control applications exposed to severe constrains (vibrations, shocks, corrosion etc.),
- Up to 2 wires per connection.

Ordering details

Description		Color	Type	Part Number		Pkg pce	Weight (1 pce) g
Feed-through	With rib and 2 notches for wire size 1-2.5 mm² (16-14 AWG)	Grey	DR2.5/8.ADO	1SNA199287R2000		100	6.00
	Without rib for TB assembly extremity and 2 notches for wire size 1-2.5 mm² (16-14 AWG)	Grey	DRE2.5/8.ADO	1SNA299555R0000		20	6.00

Main technical data

		IEC	UL	CSA
ADO	Rigid: Solid/Stranded	1-2.5 mm²	16-14 AWG	
	Flexible without ferrule	1-2.5 mm²	16-14 AWG	
Screw clamp	Rigid: Solid/Stranded			
	Flexible without ferrule			
	Flexible with insulated ferrule			
	Gauge			
Rated current / Rated cross section		24 A / 2.5 mm²	25 A / 14 AWG	
Rated short-time withstand current (1s)		8000 A		
Rated voltage		1000 V	600 V	
Impulse withstand voltage		8000 V		
Protection		IP20	NEMA 1	

Mounting instructions

Rail		TH 15-5.5
Wire stripping length		
Tool		
Torque		

The connecting capacity data for one Rigid: Solid/Stranded, or one Flexible conductor (when applicable) is a mandatory information required by IEC, UL and CSA standards (Copper conductors). All other data are provided as supplementary information only. For more details, please consult our CB, UL or CSA certificates and technical datasheet available on http://www.TE.com

RoHS RoHS | cCSAus | Gost R

Notes

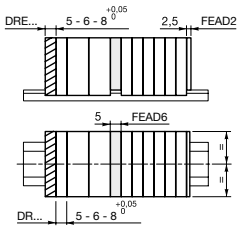

- End section FEAD1 to be mounted directly on the open part of the terminal block.
- End terminal block DRE has to be mounted at the end of the terminal blocks assembly: it reduces its size, because it suppresses the insulation rib (- 4 mm).
- Nota: This terminal block cannot be accidently located anywhere else into the terminal block assembly (without locking holes)
- Separator FEAD5 which snaps on the terminal blocks, separates and makes visible the different parts of the terminal blocks assembly.

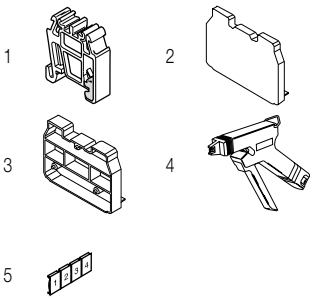

Accessories

	Description			Color	Type	Part Number		Pkg pce	Weight (1 pce) g
1	**End stops**	6.5 mm	0.256 in	Grey	BADRL	1SNA199420R2100		50	2.00
2	**End sections**	2.5 mm	0.098 in	Grey	FEAD2	1SNA199423R1000		20	1.30
3	**Circuit separators**	5 mm	0.197 in	Grey	FEAD6	1SNA199435R1400		20	1.80
4	**Tools**	Semi automatic tool			OUPAD	1SNA178944R0400		1	205.00
		Hand tool			OUMAD	1SNA179466R0600		1	29.00
5	**Terminal block markers**	Blank card			RCAL85	1SNA237000R0500		1	2.90

Complete list of accessories is indicated in the terminal block datasheet.
Some accessories such as jumper bars may modify the terminal block's ratings: complete information in the accessories catalogue pages.

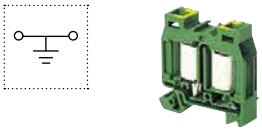

Ground IDC terminal blocks

Description		Color	Type	Part Number		Pkg pce	Weight (1 pce) g
Ground	Profile aligned with DR2.5/8.ADO	Green-yellow	DR2.5/8.P.ADO	1SNA299633R0600		100	8.00

Technical data valid for copper conductors only.

1SNC163068S0201 - Rev. A

DR2.5/8.P.ADO IDC terminal blocks

Miniblocks ADO-ADO - 8 mm 0.315 in spacing

DR2.5/8.P.ADO

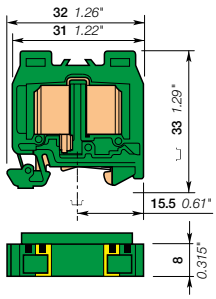

8 mm 0.315 in spacing

2.5 mm²	
14 AWG	

Description

- The mini blocks are particularly designed for applications where space is very restricted,
- Protect your installation in the event of a short-circuit thanks to our screwless rail contact non operator dependent,
- Secure mounting or removal from the rail,
- With the TE Connectivity ADO System®, experience the fastest and most reliable connection on the market,
- Up to 2 wires per connection.

Ordering details

Description		Color	Type	Part Number		Pkg pce	Weight (1 pce) g
Ground	With 2 notches for wire size 1-2.5 mm² (16-14 AWG)	Green-yellow	DR2.5/8.P.ADO	1SNA299633R0600		100	8.00

Main technical data

		IEC	UL	CSA
ADO	Rigid: Solid/Stranded	1-2.5 mm²	16-14 AWG	
	Flexible without ferrule	1-2.5 mm²		
Screw clamp	Rigid: Solid/Stranded			
	Flexible without ferrule			
	Flexible with insulated ferrule			
	Gauge			
Rated cross section		2.5 mm²	14 AWG	
Rated short-time withstand current (1s)		300 A		
Protection		IP20	NEMA 1	

Mounting instructions

Rail		TH 15-5.5
Wire stripping length		
Tool		
Torque		

The connecting capacity data for one Rigid: Solid/Stranded, or one Flexible conductor (when applicable) is a mandatory information required by IEC, UL and CSA standards (Copper conductors). All other data are provided as supplementary information only. For more details, please consult our CB, UL or CSA certificates and technical datasheet available on http://www.TE.com

RoHS RoHS | cCSAus | Gost R

6

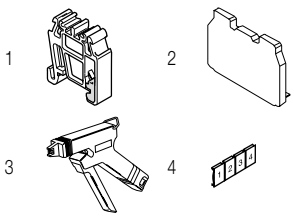

Accessories

	Description			Color	Type	Part Number		Pkg pce	Weight (1 pce) g
1	**End stops**	6.5 mm	0.256 in	Grey	BADRL	1SNA199420R2100		50	2.00
2	**End sections**	2.5 mm	0.098 in	Grey	FEAD2	1SNA199423R1000		20	1.30
3	**Tools**	Semi automatic tool			OUPAD	1SNA178944R0400		1	205.00
		Hand tool			OUMAD	1SNA179466R0600		1	29.00
4	**Terminal block markers**	Blank card			RCAL85	1SNA237000R0500		1	2.90

Complete list of accessories is indicated in the terminal block datasheet.
Some accessories such as jumper bars may modify the terminal block's ratings: complete information in the accessories catalogue pages.

Technical data valid for copper conductors only.

1SNC163069S0201 - Rev. A

DB1.5/6.ADO IDC terminal blocks

Miniblocks ADO-ADO - 6 mm 0.236 in spacing

1.5 mm²
16 AWG

DB1.5/6.ADO

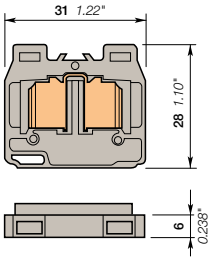

6 mm 0.236 in spacing

Description

- The mini blocks are particularly designed for applications where space is very restricted,
- With the TE Connectivity ADO System®, experience the fastest and most reliable connection on the market,
- Designed for control applications exposed to severe constrains (vibrations, shocks, corrosion etc.),
- Easy base mounting thanks to the usage of flanges,
- Up to 2 wires per connection.

Ordering details

Description	Color	Type	Part Number		Pkg pce	Weight (1 pce) g
Feed-through	Grey	DB1.5/6.ADO	1SNA299513R2600		100	4.00

Main technical data

		IEC	UL	CSA
ADO	Rigid: Solid/Stranded	0.28-1.5 mm²	22-16 AWG	
	Flexible without ferrule	0.34-1.5 mm²		
Screw clamp	Rigid: Solid/Stranded			
	Flexible without ferrule			
	Flexible with insulated ferrule			
	Gauge			
Rated current / Rated cross section		17.5 A / 1.5 mm²	20 A / 16 AWG	
Rated short-time withstand current (1s)		180 A		
Rated voltage		1000 V	600 V	
Impulse withstand voltage		8000 V		
Protection		IP20	NEMA 1	

Mounting instructions

Rail	
Wire stripping length	
Tool	
Torque	

The connecting capacity data for one Rigid: Solid/Stranded Flexible conductor (when applicable) is a mandatory information required by IEC, UL and CSA standards (Copper conductors). All other data are provided as supplementary information only. For more details, please consult our CB, UL or CSA certificates and technical datasheet available on http://www.TE.com

RoHS RoHS | cCSAus | Gost R

Notes

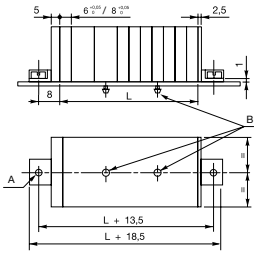

A: 2 holes DIA 3.2 mm for 3 mm screw max. with cylindrical head (not supplied)

L = (N blocks x 6) + (N blocks x 8)

Plate thickness 0.6 to 1.2 mm

Intermediate mounting of DH blocks every 2 blocks (spacing 8 mm) or 3 blocks (spacing 6 mm)

Accessories

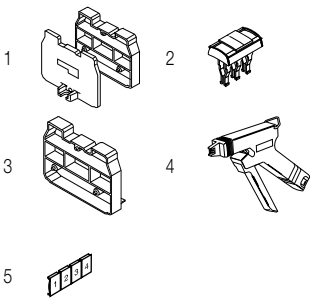

	Description			Color	Type	Part Number		Pkg pce	Weight (1 pce) g
1	End section kits			Grey	FEAD4	1SNA199439R2000		20	3.00
2	Jumper bars	2 poles	17.5 A	Orange	BJADO6-2	1SNA205974R0600		20	1.00
		3 poles			BJADO6-3	1SNA205975R0700		20	1.00
		10 poles			BJADO6-10	1SNA205982R2700		10	6.00
3	Circuit separators	5 mm	0.197 in	Grey	FEAD6	1SNA199435R1400		20	1.80
4	Tools	Semi automatic tool			OUPAD	1SNA178944R0400		1	205.00
		Hand tool			OUMAD	1SNA179466R0600		1	29.00
5	Terminal block markers	Blank card		White	RC65	1SNA232000R0000		1	3.60

Complete list of accessories is indicated in the terminal block datasheet.
Some accessories such as jumper bars may modify the terminal block's ratings: complete information in the accessories catalogue pages.

Technical data valid for copper conductors only.

1SNC163070S0201 Rev. A

DB2.5/8.ADO IDC terminal blocks

Miniblocks ADO-ADO - 8 mm 0.315 in spacing

DB2.5/8.ADO

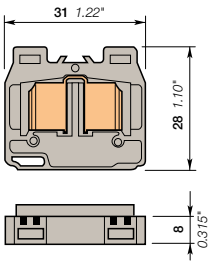

8 mm 0.315 in spacing

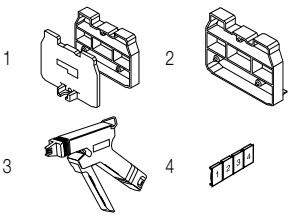

	2.5 mm²
	14 AWG

Description

- The mini blocks are particularly designed for applications where space is very restricted,
- With the TE Connectivity ADO System®, experience the fastest and most reliable connection on the market,
- Designed for control applications exposed to severe constrains (vibrations, shocks, corrosion etc.),
- Easy base mounting thanks to the usage of flanges,
- Up to 2 wires per connection.

Ordering details

Description		Color	Type	Part Number		Pkg pce	Weight (1 pce) g
Feed-through	With 2 notches for wire size 1-2.5 mm² (16-14 AWG)	Grey	DB2.5/8.ADO	1SNA299517R2200		100	6.00

Main technical data

		IEC	UL	CSA
ADO	Rigid: Solid/Stranded	1-2.5 mm²	16-14 AWG	
	Flexible without ferrule	1-2.5 mm²		
Screw clamp	Rigid: Solid/Stranded			
	Flexible without ferrule			
	Flexible with insulated ferrule			
	Gauge			
Rated current / Rated cross section		24 A / 2.5 mm²	25 A / 14 AWG	
Rated short-time withstand current (1s)		300 A		
Rated voltage		800 V	600 V	
Impulse withstand voltage		8000 V		
Protection		IP20	NEMA 1	

Mounting instructions

Rail	
Wire stripping length	
Tool	
Torque	

The connecting capacity data for one Rigid: Solid/Stranded, or one Flexible conductor (when applicable) is a mandatory information required by IEC, UL and CSA standards (Copper conductors). All other data are provided as supplementary information only. For more details, please consult our CB, UL or CSA certificates and technical datasheet available on http://www.TE.com

RoHS cCSAus Gost R

Notes

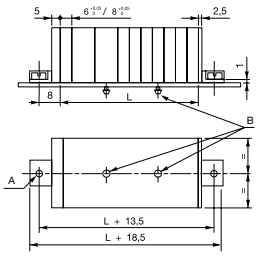

A: 2 holes DIA 3.2 mm for 3 mm screw max. with cylindrical head (not supplied)

L = (N blocks x 6) + (N blocks x 8)

Plate thickness 0.6 to 1.2 mm

Intermediate mounting of DH blocks every 2 blocks (spacing 8 mm) or 3 blocks (spacing 6 mm)

Accessories

	Description		Color	Type	Part Number		Pkg pce	Weight (1 pce) g
1	**End section kits**		Grey	FEAD4	1SNA199439R2000		20	3.00
2	**Circuit separators**	5 mm 0.197 in	Grey	FEAD6	1SNA199435R1400		20	1.80
3	**Tools**	Semi automatic tool		OUPAD	1SNA178944R0400		1	205.00
		Hand tool		OUMAD	1SNA179466R0600		1	29.00
4	**Terminal block markers**	Blank card		RCAL85	1SNA237000R0500		1	2.90

Complete list of accessories is indicated in the terminal block datasheet.
Some accessories such as jumper bars may modify the terminal block's ratings: complete information in the accessories catalogue pages.

Technical data valid for copper conductors only.

1SNC163071S0201 - Rev. A

DH1.5/6.ADO IDC terminal blocks

Miniblocks ADO-ADO - 6 mm 0.236 in spacing

1.5 mm²
16 AWG

DH1.5/6.ADO

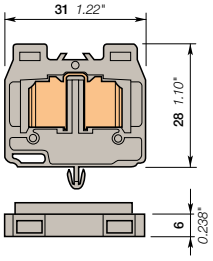

6 mm 0.236 in spacing

Description

- The mini blocks are particularly designed for applications where space is very restricted,
- With the TE Connectivity ADO System®, experience the fastest and most reliable connection on the market,
- Designed for control applications exposed to severe constrains (vibrations, shocks, corrosion etc.),
- Easy base mounting thanks to snap in mounting foot,
- Up to 2 wires per connection.

Ordering details

Description	Color	Type	Part Number		Pkg pce	Weight (1 pce) g
Feed-through	Grey	DH1.5/6.ADO	1SNA299529R0600		100	4.00

Main technical data

		IEC	UL	CSA
ADO	Rigid: Solid/Stranded	0.28-1.5 mm²	22-16 AWG	
	Flexible without ferrule	0.34-1.5 mm²		
Screw clamp	Rigid: Solid/Stranded			
	Flexible without ferrule			
	Flexible with insulated ferrule			
	Gauge			
Rated current / Rated cross section		17.5 A / 1.5 mm²	20 A / 16 AWG	
Rated short-time withstand current (1s)		180 A		
Rated voltage		1000 V	600 V	
Impulse withstand voltage		8000 V		
Protection		IP20	NEMA 1	

Mounting instructions

Rail	
Wire stripping length	
Tool	
Torque	

The connecting capacity data for one Rigid: Solid/Stranded, or one Flexible conductor (when applicable) is a mandatory information required by IEC, UL and CSA standards (Copper conductors). All other data are provided as supplementary information only. For more details, please consult our CB, UL or CSA certificates and technical datasheet available on http://www.TE.com

RoHS cCSAus Gost R

Notes

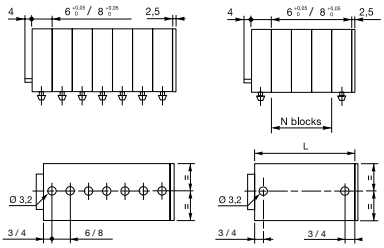

L = (N blocks x 6) + (N blocks x 8)

N blocks = 3 blocks max. with 6 mm spacing
2 blocks max. with 8 mm spacing

Plate thickness 0.6 to 1.2 mm

Accessories

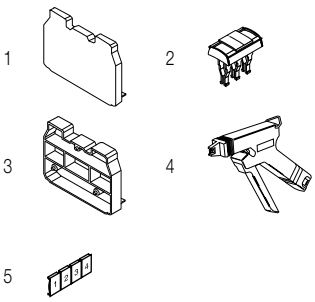

	Description			Color	Type	Part Number		Pkg pce	Weight (1 pce) g
1	End sections	2.5 mm	0.098 in	Grey	FEAD2	1SNA199423R1000		20	1.30
2	Jumper bars	2 poles	17.5 A	Orange	BJADO6-2	1SNA205974R0600		20	1.00
		3 poles			BJADO6-3	1SNA205975R0700		20	1.00
		10 poles			BJADO6-10	1SNA205982R2700		10	6.00
3	Circuit separators	5 mm	0.197 in	Grey	FEAD6	1SNA199435R1400		20	1.80
4	Tools	Semi automatic tool			OUPAD	1SNA178944R0400		1	205.00
		Hand tool			OUMAD	1SNA179466R0600		1	29.00
5	Terminal block markers	Blank card		White	RC65	1SNA232000R0000		1	3.60

Complete list of accessories is indicated in the terminal block datasheet.
Some accessories such as jumper bars may modify the terminal block's ratings: complete information in the accessories catalogue pages.

Technical data valid for copper conductors only.

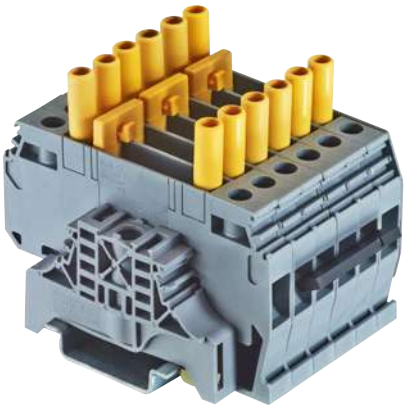

1SNC160100S0201

Dedicated applications terminal blocks
Test & measurement

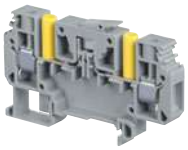

Technologies presentation			154
Overview			156

Screw clamp technology

Test disconnect with screwdriver sliding link

6 mm² / 8 AWG	**M6/8.ST**		157
	M6/8.ST1	With test	158
	M6/8.ST1.IP20	With insulated test sockets	159
	M6/8.ST3	With insulated rod	160
	M6/8.ST7	Feed-through	161
	M6/8.STA	With test	162

Test disconnect with blade

6 mm² / 8 AWG	**D6/10.SNBTB1**		163
	D6/10.SNBTB2	With test	164

Test disconnect with plug

4 mm² / 12 AWG	**M4/6.ST**		165
10 mm² / 8 AWG	**M10/10.ST-Sn**		166

Test disconnect with push-turn knob

6 mm² / 8 AWG	**M6/8.STP1**	With test	167
	M6/8.STP	With test	168

Spring loaded screw clamp technology

Test disconnect with screwdriver sliding link

6 mm² / 12 AWG	**D6/8.ST1.RS**	With test	169
	D6/8.ST1.RS.IP20	With insulated test sockets	170

1SNC160100S0201

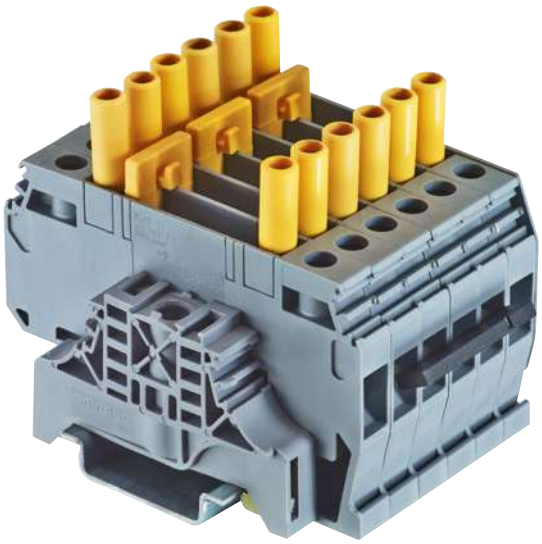

Secure your measurement operations

Our test & measurement terminal blocks benefit from our long experience in the energy applications.
A large choice of accessories make the test & measurement operation easy and secure.

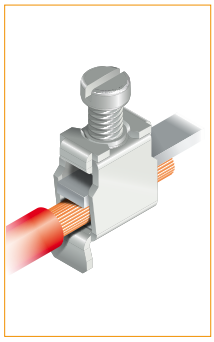

CE RoHS ISO 9001

A large choice of combinations and accessories

Short-circuit CT circuits safely and conveniently

TE connectivity's insulated short-circuit bridge allows secured short-circuit position thanks to AJS9 test sockets tightening.
Adapted hook shape maintains the bridge on terminal block in the non connected position.

Test your circuits with flexibility using AJS9 test sockets

The insulated test sockets AJS9 are available in 6 colors for convenient circuit identification.
They are compatible with standard DIA. 4 mm test plugs (IEC 60010-031).
Fully operated by screwdriver (DIA. 3.5 mm).

Convenient circuit distribution with lateral jumpers

TE Connectivity provides a whole set of lateral jumpers adapted to the various circuit configurations of our customers.

Secure your disconnect operation during short-circuiting

In non short-circuited position:
- The short circuiting bridge is opened. For security purpose, the access to the disconnect sliding unit is blocked (in closed position).

In short-circuited position:
- The short circuiting bridge is first positioned, authorizing access to the disconnect sliding unit for opening the circuit.

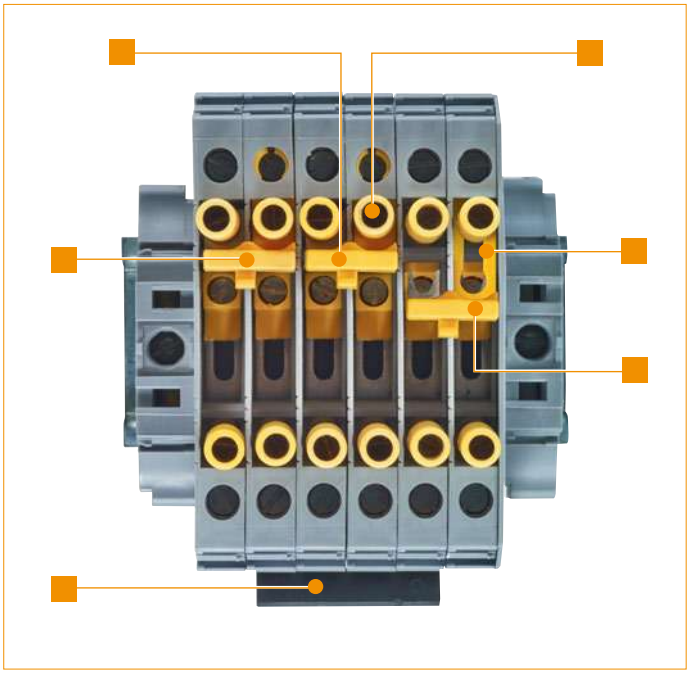

1SNC161164S0201

Common point on the transformers

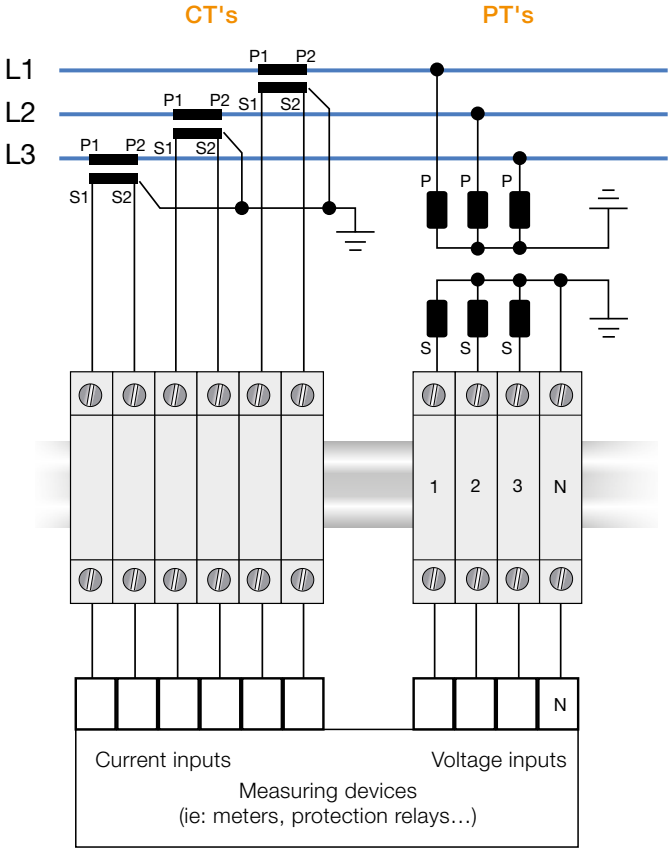

1SNC161165S0201

Screw clamp technology

Section IEC	UL/CSA	Test disconnect with screwdriver sliding link		Test disconnect with insulated rod sliding link	Feed-through	Test disconnect with screwdriver sliding link
6 mm²	8 AWG	M6/8.ST 6 mm 0.236 in	M6/8.ST1.IP20 6 mm 0.236 in	M6/8.ST3 8 mm 0.315 in	M6/8.ST7 8 mm 0.315 in	M6/8.STA 6 mm 0.236 in

Section IEC	UL/CSA	Test disconnect with blade	Test disconnect with plug	Test disconnect with push-turn knob	
4 mm²	12 AWG		M4/6.ST 6 mm 0.236 in		
6 mm²	8 AWG	D6/10.SNBTB 10 mm 0.394 in		M6/8.STP1 8 mm 0.315 in	M6/8.STP 8 mm 0.315 in
10 mm²	8 AWG		M10/10.ST-Sn 10 mm 0.394 in		

Spring loaded screw clamp technology

Section IEC	UL/CSA	Test disconnect with screwdriver sliding link
6 mm²	12 AWG	D6/8.ST1.RS.IP20 8 mm 0.315 in

1SNC161163S0201

M6/8.ST screw clamp terminal blocks

Test disconnect with a screwdriver sliding link - 8 mm 0.315 in spacing

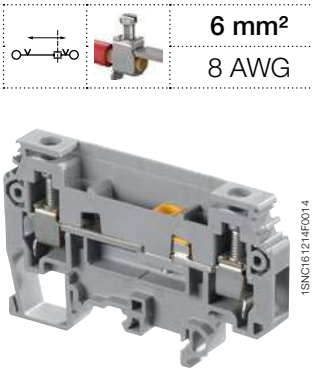

M6/8.ST

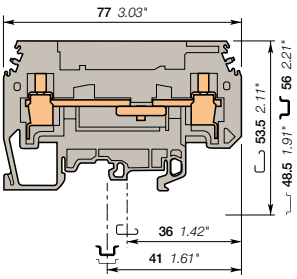

8 mm 0.315 in spacing

6 mm²
8 AWG

Description

Secure your disconnect operations with the disconnect sliding link operated with a screwdriver.

Ordering details

Description	Color	Type	Part Number		Pkg pce	Weight (1 pce) g
Disconnect	Grey	M6/8.ST	1SNA115236R1700		25	30.00

Main technical data

		IEC	UL	CSA
1 conductor per clamp	Rigid: Solid/Stranded	0.5-10 mm²	18 - 8 AWG	18-8 AWG
	Flexible without ferrule	0.5-6 mm²		
	Flexible with insulated ferrule			
	Gauge	A5		
Rated current / Rated cross section		40 A / 6 mm²	30 A / 8 AWG	30 A / 8 AWG
Rated short-time withstand current (1s)		720 A		
Rated voltage		630 V	150 V	150 V
Impulse withstand voltage				
Protection		IP20	NEMA 1	

Mounting instructions

Rail	G32, TH 35-7.5, TH 35-15
Wire stripping length	13 mm 0.51 in
Screw clamp Tool	Flat screwdriver Ø 5 mm Ø 0.197 in
Torque	0.8 - 1 N.m 7.1 - 8.9 lb.in
Disconnect device Tool	Flat screwdriver Ø 3.5 mm Ø 0.138 in
Torque	0.4 - 0.6 N.m 3.5 - 5.3 lb.in

The connecting capacity data for one Rigid: Solid/Stranded, or one Flexible conductor (when applicable) is a mandatory information required by IEC, UL and CSA standards (Copper conductors). All other data are provided as supplementary information only. For more details, please consult our CB, UL or CSA certificates and technical datasheet available on http://www.TE.com

CE RoHS USR CSA Gost R

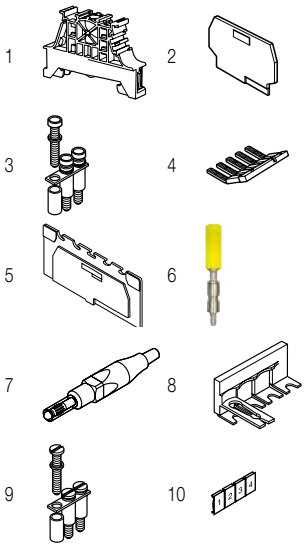

Accessories

	Description			Color	Type	Part Number		Pkg pce	Weight (1 pce) g
1	**End stops**	10 mm	0.394 in	Dark grey	BAM4	1SNK900001R0000		50	14.00
		5.2 mm	0.205 in		BAZ1	1SNK900002R0000		50	5.30
2	**End sections**	1 mm	0.039 in	Grey	FEMT2	1SNA113629R2700		10	2.00
3	**Jumper bars**	20 poles	41 A		BJS8-20	1SNA174789R0500		5	3.20
4	**Lateral jumper bars**	50 A		Black	PC8-10	1SNA163313R2400		10	14.00
					PC8-R1	1SNA400711R0600		10	6.60
					PC8-R2	1SNA400712R0700		10	7.84
					PC8-R3	1SNA400713R0000		10	9.00
					PC8-R4	1SNA400724R0300		10	4.50
5	**Circuit separators**	3 mm	0.118 in	Grey	SCFT2	1SNA114522R0500		20	
6	**Test sockets**	DIA 4 mm 0.157 in IP20		Yellow	AJS9	1SNA179726R0200		25	5.00
				Black	AJS9-1	1SNA206680R1500		25	3.60
				Green	AJS9-2	1SNA206681R0200		25	3.60
				Grey	AJS9-3	1SNA206682R0300		25	3.60
				Blue	AJS9-4	1SNA206683R0400		25	3.60
				Red	AJS9-5	1SNA206720R1400		25	3.60
		DIA 4 mm 0.157 in			AL4-M3	1SNA206721R0100		50	1.10
7	**Test plugs**	DIA 4 mm 0.157 in IP20		Red	FC4-1	1SNA167927R1000		10	11.00
8	**Short circuit bridges**	2 poles		Yellow	SC-JB8-2	1SNK900652R0000		25	2.00
		3 poles			SC-JB8-3	1SNK900653R0000		25	3.40
		4 poles			SC-JB8-4	1SNK900654R0000		25	4.70
9	**Fastening kits**	Sub assembly post + screw + washer			EV8S	1SNA168401R0300		20	3.00
10	**Terminal block markers**	Blank card		White	RC810	1SNA234000R0200		1	8.20

Complete list of accessories is indicated in the terminal block datasheet.
Some accessories such as jumper bars may modify the terminal block's ratings: complete information in the accessories catalogue pages.

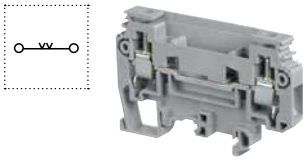

Feed-through screw clamp terminal blocks

Description		Color	Type	Part Number		Pkg pce	Weight (1 pce) g
Feed-through	Profile aligned with M6/8.ST...	Grey	M6/8.ST7	1SNA115243R2600		25	20.00

Technical data valid for copper conductors only.

1SNC161055S0201

M6/8.ST screw clamp terminal blocks

Test disconnect with a screwdriver sliding link - 8 mm 0.315 in spacing

6 mm²	
8 AWG	

M6/8.ST

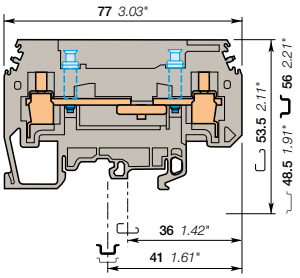

8 mm 0.315 in spacing

Description

- Secure your disconnect operations with the disconnect sliding link operated with a screwdriver,
- Ease your test operations with the 2 independent built-in test sockets compatible with DIA 4 mm 0.157 in test plugs.

Ordering details

Description		Color	Type	Part Number		Pkg pce	Weight (1 pce) g
Disconnect	With 2 test sockets DIA 4 mm 0.157 in	Grey	M6/8.ST1	1SNA115237R1000		25	30.00

Main technical data

		IEC	UL	CSA
1 conductor per clamp	Rigid: Solid/Stranded	0.5-10 mm²	18 - 8 AWG	18-8 AWG
	Flexible without ferrule	0.5-6 mm²		
	Flexible with insulated ferrule			
	Gauge	A5		
Rated current / Rated cross section		40 A / 6 mm²	30 A / 8 AWG	30 A / 8 AWG
Rated short-time withstand current (1s)		720 A		
Rated voltage		630 V	150 V	150 V
Impulse withstand voltage				
Protection			NEMA	

Mounting instructions

Rail	G32, TH 35-7.5, TH 35-15
Wire stripping length	13 mm 0.51 in
Screw clamp Tool	Flat screwdriver Ø 5 mm Ø 0.197 in
Torque	0.8 - 1 N.m 7.1 - 8.9 lb.in
Disconnect device Tool	Flat screwdriver Ø 3.5 mm Ø 0.138 in
Torque	0.4 - 0.6 N.m 3.5 - 5.3 lb.in

The connecting capacity data for one Rigid: Solid/Stranded, or one Flexible conductor (when applicable) is a mandatory information required by IEC, UL and CSA standards (Copper conductors). All other data are provided as supplementary information only. For more details, please consult our CB, UL or CSA certificates and technical datasheet available on http://www.TE.com

CE RoHS USR CSA Gost R

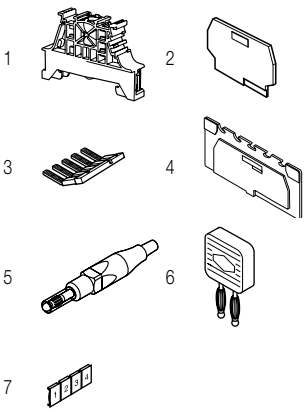

Accessories

	Description			Color	Type	Part Number		Pkg pce	Weight (1 pce) g
1	**End stops**	10 mm	0.394 in	Dark grey	BAM4	1SNK900001R0000		50	14.00
		9 mm	0.354 in		BAZ1	1SNK900002R0000		50	4.70
2	**End sections**	1 mm	0.039 in	Grey	FEMT2	1SNA113629R2700		10	2.00
3	**Lateral jumper bars**	50 A		Black	PC8-10	1SNA163313R2400		10	14.00
					PC8-R1	1SNA400711R0600		10	6.60
					PC8-R2	1SNA400712R0700		10	7.84
					PC8-R3	1SNA400713R0000		10	9.00
					PC8-R4	1SNA400724R0300		10	4.50
4	**Circuit separators**	3 mm	0.118 in	Grey	SCFT2	1SNA114522R0500		20	
5	**Test plugs**	DIA 4 mm 0.157 in IP20		Red	FC4-1	1SNA167927R1000		10	11.00
6	**Short circuit plugs**	DIA 4 mm 0.157 in			BP8.A4	1SNA173888R2000		10	
7	**Terminal block markers**	Blank card		White	RC810	1SNA234000R0200		1	8.20

Complete list of accessories is indicated in the terminal block datasheet.
Some accessories such as jumper bars may modify the terminal block's ratings: complete information in the accessories catalogue pages.

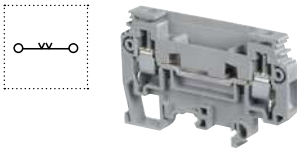

Feed-through screw clamp terminal blocks

Description		Color	Type	Part Number		Pkg pce	Weight (1 pce) g
Feed-through	Profile aligned with M6/8.ST...	Grey	M6/8.ST7	1SNA115243R2600		25	20.00

Technical data valid for copper conductors only.

1SNC161109S0201

M6/8.ST screw clamp terminal blocks

Test disconnect with a screwdriver sliding link - 8 mm 0.315 in spacing

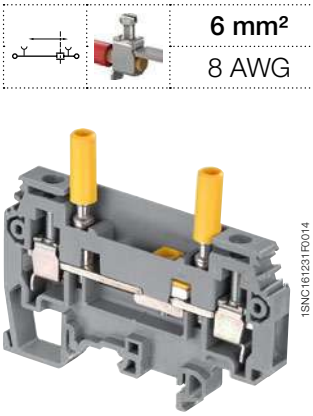

M6/8.ST

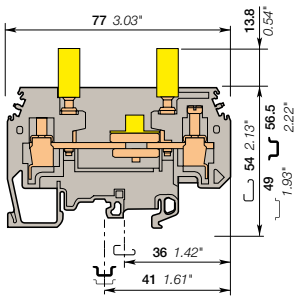

8 mm 0.315 in spacing

6 mm²
8 AWG

Description

- Terminal blocks especially designed for current transformers circuits:
- Easy and secured current measurement thanks to the two built-in test yellow sockets compatible with IP20 DIA 4 mm 0.157 in test plugs,
- Convenient short-circuit operations with the PCS sliding short circuiting bridges from 2 to 4 poles,
- Tests sockets available as well in black, green, grey and blue.

Ordering details

Description		Color	Type	Part Number		Pkg pce	Weight (1 pce) g
Disconnect	With two yellow test sockets DIA 4 mm 0.157 in	Grey	M6/8.ST1.IP20	1SNA115971R1000		25	40.00

Main technical data

		IEC	UL	CSA
1 conductor per clamp	Rigid: Solid/Stranded	0.5 - 10 mm²	18 - 8 AWG	18 - 8 AWG
	Flexible without ferrule	0.5 - 6 mm²		
	Flexible with insulated ferrule			
	Gauge	A5		
Rated current / Rated cross section		40 A / 6 mm²	30 A / 8 AWG	30 A / 8 AWG
Rated short-time withstand current (1s)		720 A		
Rated voltage		630 V	150 V	150 V
Impulse withstand voltage		8000 V		
Protection		IP20	NEMA 1	

Mounting instructions

Rail	G32, TH 35-7.5, TH 35-15
Wire stripping length	13 mm 0.51 in
Screw clamp Tool	Flat screwdriver Ø 3.5 mm Ø 0.138 in
Torque	0.8 - 1 N.m 7.1 - 8.9 lb.in
Disconnect device Tool	Flat screwdriver Ø 3.5 mm Ø 0.138 in
Torque	0.5 N.m 4.45 lb.in
Test socket Tool	Flat screwdriver Ø 3.5 mm Ø 0.138 in
Torque	0.6 N.m 5.34 lb.in

The connecting capacity data for one Rigid: Solid/Stranded, or one Flexible conductor (when applicable) is a mandatory information required by IEC, UL and CSA standards (Copper conductors). All other data are provided as supplementary information only. For more details, please consult our CB, UL or CSA certificates and technical datasheet available on http://www.TE.com

CE RoHS USR CSA Gost R

Accessories

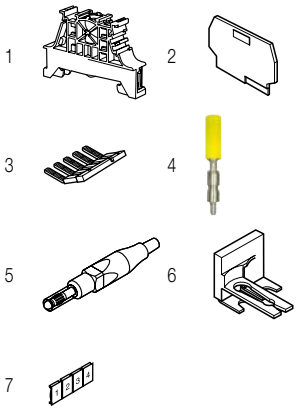

	Description			Color	Type	Part Number		Pkg pce	Weight (1 pce) g
1	**End stops**	10 mm	0.394 in	Dark grey	BAM4	1SNK900001R0000		50	14.00
		9 mm	0.354 in		BAZ1	1SNK900002R0000		50	4.70
2	**End sections**	1 mm	0.039 in	Grey	FEMT2	1SNA113629R2700		10	2.00
3	**Lateral jumper bars**	50 A		Black	PC8-10	1SNA163313R2400		10	14.00
					PC8-R1	1SNA400711R0600		10	6.60
					PC8-R2	1SNA400712R0700		10	7.84
					PC8-R3	1SNA400713R0000		10	9.00
					PC8-R4	1SNA400724R0300		10	4.50
4	**Test sockets**	DIA 4 mm 0.157 in IP20		Black	AJS9-1	1SNA206680R1500		25	3.60
				Green	AJS9-2	1SNA206681R0200		25	3.60
				Grey	AJS9-3	1SNA206682R0300		25	3.60
				Blue	AJS9-4	1SNA206683R0400		25	3.60
				Red	AJS9-5	1SNA206720R1400		25	3.60
5	**Test plugs**	DIA 4 mm 0.157 in IP20		Red	FC4-1	1SNA167927R1000		10	11.00
6	**Short circuit bridges**	2 poles		Yellow	SC-JB8-2	1SNK900652R0000		25	2.00
		3 poles			SC-JB8-3	1SNK900653R0000		25	3.40
		4 poles			SC-JB8-4	1SNK900654R0000		25	4.70
7	**Terminal block markers**	Blank card		White	RC810	1SNA234000R0200		1	8.20

Complete list of accessories is indicated in the terminal block datasheet.
Some accessories such as jumper bars may modify the terminal block's ratings: complete information in the accessories catalogue pages.

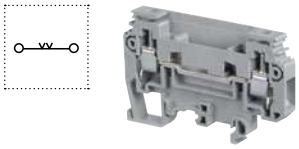

Feed-through screw clamp terminal blocks

Description		Color	Type	Part Number		Pkg pce	Weight (1 pce) g
Feed-through	Profile aligned with M6/8.ST...	Grey	M6/8.ST7	1SNA115243R2600		25	20.00

Technical data valid for copper conductors only.

1SNC161111S0201

M6/8.ST screw clamp terminal blocks

Test disconnect with insulated rod sliding link - 8 mm 0.315 in spacing

6 mm²
8 AWG

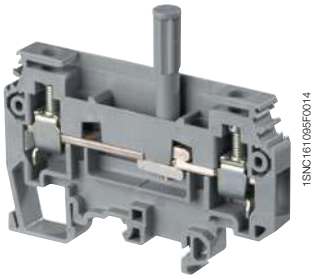

M6/8.ST

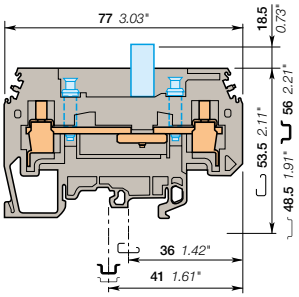

8 mm 0.315 in spacing

Description

- Secure your disconnect operations with the disconnect sliding link operated with a screwdriver,
- Ease your test operations with the two independent built-in test sockets compatible with DIA 4 mm 0.157 in test plugs.

Ordering details

Description		Color	Type	Part Number		Pkg pce	Weight (1 pce) g
Disconnect	With 2 test sockets DIA 4 mm 0.157 in	Grey	M6/8.ST3	1SNA115239R2200		25	30.00

Main technical data

		IEC	UL	CSA
1 conductor per clamp	Rigid: Solid/Stranded	0.5-10 mm²	18 - 8 AWG	18-8 AWG
	Flexible without ferrule	0.5-6 mm²		
	Flexible with insulated ferrule			
	Gauge	A5		
Rated current / Rated cross section		40 A / 6 mm²	30 A / 8 AWG	30 A / 8 AWG
Rated short-time withstand current (1s)		720 A		
Rated voltage		630 V	150 V	150 V
Impulse withstand voltage				
Protection			NEMA	

Mounting instructions

Rail	G32, TH 35-7.5, TH 35-15
Wire stripping length	
Screw clamp Tool	Flat screwdriver Ø 5 mm Ø 0.197 in
Torque	0.8 - 1 N.m 7.1 - 8.9 lb.in
Disconnect device Tool	Flat screwdriver Ø 3.5 mm Ø 0.138 in
Torque	0.4 - 0.6 N.m 3.5 - 5.3 lb.in

The connecting capacity data for one Rigid: Solid/Stranded, or one Flexible conductor (when applicable) is a mandatory information required by IEC, UL and CSA standards (Copper conductors). All other data are provided as supplementary information only. For more details, please consult our CB, UL or CSA certificates and technical datasheet available on http://www.TE.com

CE RoHS USR CSA Gost R

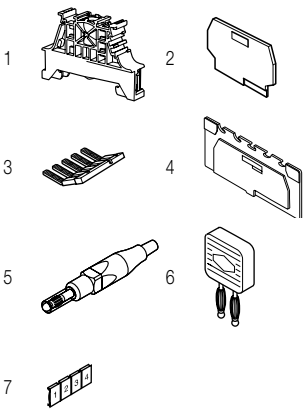

Accessories

	Description			Color	Type	Part Number		Pkg pce	Weight (1 pce) g
1	**End stops**	10 mm		Dark grey	BAM4	1SNK900001R0000		50	14.00
		9 mm			BAZ1	1SNK900002R0000		50	4.70
2	**End sections**	1 mm	0.039 in	Grey	FEMT2	1SNA113629R2700		10	2.00
3	**Lateral jumper bars**	50 A		Black	PC8-10	1SNA163313R2400		10	14.00
					PC8-R1	1SNA400711R0600		10	6.60
					PC8-R2	1SNA400712R0700		10	7.84
					PC8-R3	1SNA400713R0000		10	9.00
					PC8-R4	1SNA400724R0300		10	4.50
4	**Circuit separators**	3 mm	0.118 in	Grey	SCFT2	1SNA114522R0500		20	
5	**Test plugs**	DIA 4 mm 0.157 in IP20		Red	FC4-1	1SNA167927R1000		10	11.00
6	**Short circuit plugs**	DIA 4 mm 0.157 in			BP8.A4	1SNA173888R2000		10	
7	**Terminal block markers**	Blank card		White	RC810	1SNA234000R0200		1	8.20

Complete list of accessories is indicated in the terminal block datasheet.
Some accessories such as jumper bars may modify the terminal block's ratings: complete information in the accessories catalogue pages.

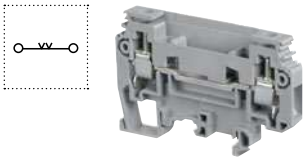

Feed-through screw clamp terminal blocks

Description		Color	Type	Part Number		Pkg pce	Weight (1 pce) g
Feed-through	Profile aligned with M6/8.ST...	Grey	M6/8.ST7	1SNA115243R2600		25	20.00

Technical data valid for copper conductors only.

1SNC161110S0201

M6/8.ST screw clamp terminal blocks
Feed-through - 8 mm 0.315 in spacing

6 mm²
8 AWG

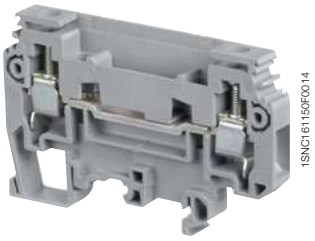

M6/8.ST

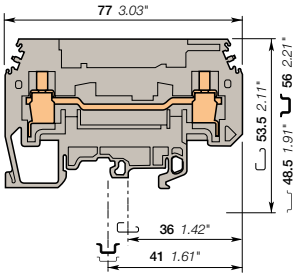

8 mm 0.315 in spacing

Description

Profile aligned with M6/8 ST.

Ordering details

Description	Color	Type	Part Number		Pkg pce	Weight (1 pce) g
Feed-through	Grey	M6/8.ST7	1SNA115243R2600		25	20.00

Main technical data

		IEC	UL	CSA
1 conductor per clamp	Rigid: Solid/Stranded	0.5-10 mm²	18 - 8 AWG	18-8 AWG
	Flexible without ferrule	0.5-6 mm²		
	Flexible with insulated ferrule			
	Gauge	A5		
Rated current / Rated cross section		40 A / 6 mm²	40 A / 8 AWG	40 A / 8 AWG
Rated short-time withstand current (1s)		720 A		
Rated voltage		630 V	150 V	150 V
Impulse withstand voltage				
Protection			NEMA	

Mounting instructions

Rail	G32, TH 35-7.5, TH 35-15
Wire stripping length	13 mm 0.51 in
Tool	Flat screwdriver Ø 5 mm Ø 0.197 in
Torque	0.8 - 1 N.m 7.1 - 8.9 lb.in

The connecting capacity data for one Rigid: Solid/Stranded, or one Flexible conductor (when applicable) is a mandatory information required by IEC, UL and CSA standards (Copper conductors). All other data are provided as supplementary information only. For more details, please consult our CB, UL or CSA certificates and technical datasheet available on http://www.TE.com

CE RoHS USR CSA Gost R

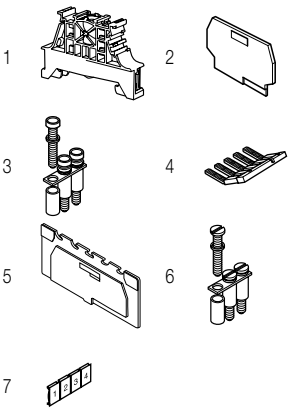

Accessories

	Description			Color	Type	Part Number		Pkg pce	Weight (1 pce) g
1	End stops	10 mm	0.394 in	Dark grey	BAM4	1SNK900001R0000		50	14.00
		9 mm	0.354 in		BAZ1	1SNK900002R0000		50	4.70
2	End sections	1 mm	0.039 in	Grey	FEMT2	1SNA113629R2700		10	2.00
3	Jumper bars	20 poles	41 A		BJS8-20	1SNA174789R0500		5	3.20
4	Lateral jumper bars	2 poles	50 A	Black	PC8-2	1SNA116538R1700		10	3.00
		3 poles			PC8-3	1SNA116539R1000		10	4.00
		4 poles			PC8-4	1SNA116540R2500		10	6.00
		10 poles			PC8-10	1SNA163313R2400		10	14.00
					PC8-R1	1SNA400711R0600		10	6.60
					PC8-R2	1SNA400712R0700		10	7.84
					PC8-R3	1SNA400713R0000		10	9.00
					PC8-R4	1SNA400724R0300		10	4.50
5	Circuit separators	3 mm	0.118 in	Grey	SCFT2	1SNA114522R0500		20	
6	Fastening kits	Sub assembly post + screw + washer			EV8S	1SNA168401R0300		20	3.00
7	Terminal block markers	Blank card		White	RC810	1SNA234000R0200		1	8.20

Complete list of accessories is indicated in the terminal block datasheet.
Some accessories such as jumper bars may modify the terminal block's ratings: complete information in the accessories catalogue pages.

1SNC161069S0201

Technical data valid for copper conductors only.

M6/8.ST screw clamp terminal blocks

Test disconnect with a screwdriver sliding link - 8 mm 0.315 in spacing

6 mm²
8 AWG

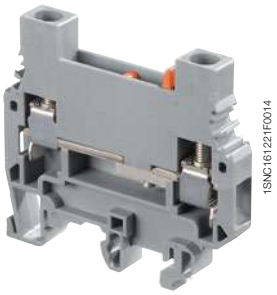

M6/8.ST

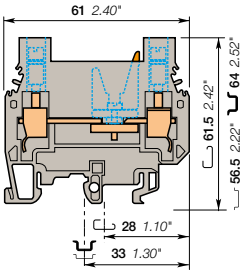

8 mm 0.315 in spacing

Description

- Compact disconnect terminal blocks:
- Secure your disconnect operations with the disconnect orange sliding link operated with a screwdriver,
- Ease your test operations with the two built-in test sockets screws compatible with DIA 4 mm 0.157 in test plugs.

Ordering details

Description		Color	Type	Part Number		Pkg pce	Weight (1 pce) g
Disconnect	With 2 test sockets DIA 4 mm 0.157 in	Grey	M6/8.STA	1SNA115359R0200		25	30.00

Main technical data

		IEC	UL	CSA
1 conductor per clamp	Rigid: Solid/Stranded	0.5-10 mm²	22 - 8 AWG	
	Flexible without ferrule	0.5-6 mm²		
	Flexible with insulated ferrule			
	Gauge	A5		
Rated current / Rated cross section		30 A / 6 mm²	50 A / 8 AWG	
Rated short-time withstand current (1s)		480 A		
Rated voltage		500 V	600 V	
Impulse withstand voltage				
Protection		IP20	NEMA 1	

Mounting instructions

Rail		G32, TH 35-7.5, TH 35-15
Wire stripping length		11 mm 0.43 in
Screw clamp Tool		Flat screwdriver Ø 5.5 mm Ø 0.217 in
Torque		0.8 - 1 N.m 7.1 - 8.9 lb.in
Disconnect device Tool		Flat screwdriver Ø 4 mm Ø 0.157 in
Torque		0.4 - 0.6 N.m 3.5 - 5.3 lb.in

The connecting capacity data for one Rigid: Solid/Stranded, or one Flexible conductor (when applicable) is a mandatory information required by IEC, UL and CSA standards (Copper conductors). All other data are provided as supplementary information only. For more details, please consult our CB, UL or CSA certificates and technical datasheet available on http://www.TE.com

CE RoHS USR Gost R

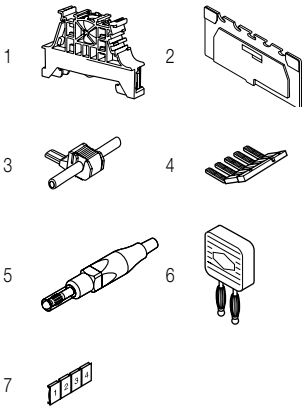

Accessories

	Description			Color	Type	Part Number		Pkg pce	Weight (1 pce) g
1	**End stops**	10 mm	0.394 in	Dark grey	BAM4	1SNK900001R0000		50	14.00
		9 mm	0.354 in		BAZ1	1SNK900002R0000		50	4.70
2	**End sections**	3 mm	0.118 in	Grey	FEMT4	1SNA114778R0500		10	5.60
					FEMSTA	1SNA116979R2100		10	3.60
3	**Jumper bars**	1 poles	24 A	Grey	AD2.5	1SNA114205R2000		50	1.60
4	**Lateral jumper bars**	2 poles	50 A	Black	PC8-2	1SNA116538R1700		10	3.00
		3 poles			PC8-3	1SNA116539R1000		10	4.00
		4 poles			PC8-4	1SNA116540R2500		10	6.00
		10 poles			PC8-10	1SNA163313R2400		10	14.00
5	**Test plugs**	DIA 4 mm 0.157 in IP20		Red	FC4-1	1SNA167927R1000		10	11.00
6	**Short circuit plugs**				BP8.A4	1SNA173888R2000		10	
7	**Terminal block markers**	Blank card		White	RC810	1SNA234000R0200		1	8.20

Complete list of accessories is indicated in the terminal block datasheet.
Some accessories such as jumper bars may modify the terminal block's ratings: complete information in the accessories catalogue pages.

1SNC161031S0201

Technical data valid for copper conductors only.

D6/10.SNBTB screw clamp terminal blocks

Test disconnect with blade - 10 mm 0.394 in spacing

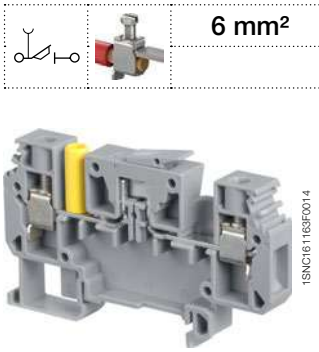

D6/10.SNBTB

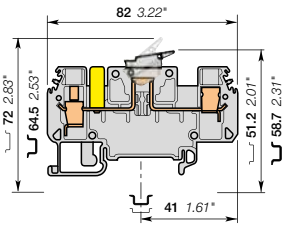

10 mm 0.394 in spacing

6 mm²

Description

- Ease your disconnect operations with the disconnect blade,
- Ease your test operations with built-in test sockets compatible with DIA 4 mm 0.157 in test plugs.

Ordering details

Description		Color	Type	Part Number		Pkg pce	Weight (1 pce) g
Disconnect	With 1 isolated test socket DIA 4 mm 0.157 in	Grey	D6/10.SNBTB1	1SNA115928R1500		20	25.00

Main technical data

		IEC	UL	CSA
1 conductor per clamp	Rigid: Solid/Stranded	0.5-10 mm²		
	Flexible without ferrule	0.5-6 mm²		
	Flexible with insulated ferrule			
	Gauge	A5		
Rated current / Rated cross section		15 A / 6 mm²		
Rated short-time withstand current (1s)		720 A		
Rated voltage		500 V		
Impulse withstand voltage		6000 V		
Protection		IP20	NEMA 1	

Mounting instructions

Rail	G32, TH 35-7.5, TH 35-15
Wire stripping length	12 mm 0.47 in
Tool	Flat screwdriver Ø 4 mm Ø 0.157 in
Torque	0.8 N.m 7.1 lb.in

The connecting capacity data for one Rigid: Solid/Stranded, or one Flexible conductor (when applicable) is a mandatory information required by IEC, UL and CSA standards (Copper conductors). All other data are provided as supplementary information only. For more details, please consult our CB, UL or CSA certificates and technical datasheet available on http://www.TE.com

CE RoHS Gost R

Accessories

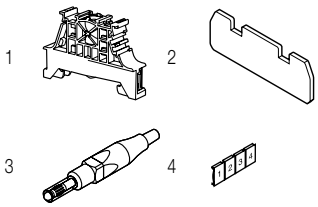

	Description			Color	Type	Part Number		Pkg pce	Weight (1 pce) g
1	**End stops**	10 mm	0.394 in	Dark grey	BAM4	1SNK900001R0000		50	14.00
		5.2 mm	0.205 in		BAZ1	1SNK900002R0000		50	5.30
2	**End sections**	2 mm	0.079 in	Grey	FED10S1	1SNA215999R2100		20	3.35
3	**Test plugs**	DIA 4 mm 0.157 in IP20		Red	FC4-1	1SNA167927R1000		10	11.00
4	**Terminal block markers**	Blank card		White	RC1010	1SNA238000R1600		1	1.30

Complete list of accessories is indicated in the terminal block datasheet.
Some accessories such as jumper bars may modify the terminal block's ratings: complete information in the accessories catalogue pages.

Technical data valid for copper conductors only.

1SNC161154S0201 - Rev. A

D6/10.SNBTB screw clamp terminal blocks

Test disconnect with blade - 10 mm 0.394 in spacing

6 mm²

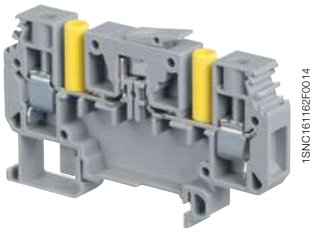

D6/10.SNBTB

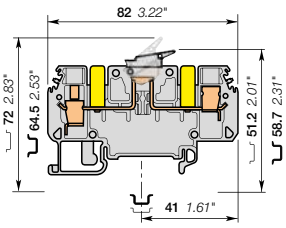

10 mm 0.394 in spacing

Description

- Ease your disconnect operations with the disconnect blade,
- Ease your test operations with built-in test sockets compatible with DIA 4 mm 0.157 in test plugs.

Ordering details

Description		Color	Type	Part Number		Pkg pce	Weight (1 pce) g
Disconnect	With 2 isolated test sockets DIA 4 mm 0.157 in	Grey	D6/10.SNBTB2	1SNA115929R1600		20	25.00

Main technical data

		IEC	UL	CSA
1 conductor per clamp	Rigid: Solid/Stranded	0.5-10 mm²		
	Flexible without ferrule	0.5-6 mm²		
	Flexible with insulated ferrule			
	Gauge	A5		
Rated current / Rated cross section		15 A / 6 mm²		
Rated short-time withstand current (1s)		720 A		
Rated voltage		500 V		
Impulse withstand voltage		6000 V		
Protection		IP20	NEMA 1	

Mounting instructions

Rail	G32, TH 35-7.5, TH 35-15
Wire stripping length	12 mm 0.47 in
Tool	Flat screwdriver Ø 4 mm Ø 0.157 in
Torque	0.8 N.m 7.1 lb.in

The connecting capacity data for one Rigid: Solid/Stranded, or one Flexible conductor (when applicable) is a mandatory information required by IEC, UL and CSA standards (Copper conductors). All other data are provided as supplementary information only. For more details, please consult our CB, UL or CSA certificates and technical datasheet available on http://www.TE.com

CE RoHS Gost R

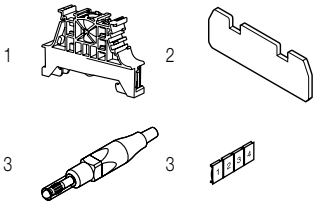

Accessories

	Description			Color	Type	Part Number		Pkg pce	Weight (1 pce) g
1	**End stops**	10 mm	0.394 in	Dark grey	BAM4	1SNK900001R0000		50	14.00
		5.2 mm	0.205 in		BAZ1	1SNK900002R0000		50	5.30
2	**End sections**	2 mm	0.079 in	Grey	FED10S1	1SNA215999R2100		20	3.35
3	**Test plugs**	DIA 4 mm 0.157 in IP20		Red	FC4-1	1SNA167927R1000		10	11.00
4	**Terminal block markers**	Blank card		White	RC1010	1SNA238000R1600		1	1.30

Complete list of accessories is indicated in the terminal block datasheet.
Some accessories such as jumper bars may modify the terminal block's ratings: complete information in the accessories catalogue pages.

Technical data valid for copper conductors only.

1SNC161155S0201 - Rev. A

M4/6.ST screw clamp terminal blocks

Test disconnect with plug - 6 mm 0.236 in spacing

M4/6.ST

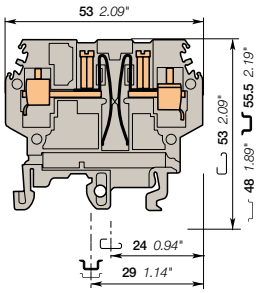

6 mm 0.236 in spacing

	4 mm²
	12 AWG

Description

- Test disconnect terminal blocks operated with plug,
- Dedicated "make before break" plug for current circuit (green plug) or "break before make" for voltage circuit (red plug).

Ordering details

Description		Color	Type	Part Number		Pkg pce	Weight (1 pce) g
Disconnect	Tinned contact blades	Grey	M4/6.ST.Sn	1SNA115313R1400		20	14.00
	Gold contact blades		M4/6.ST.Au	1SNA115314R1500		20	14.00

Main technical data

		IEC	UL	CSA
1 conductor per clamp	Rigid: Solid/Stranded	0.5 - 4 mm²		22-12 AWG
	Flexible without ferrule	0.5 - 4 mm²		
	Flexible with insulated ferrule			
	Gauge	A4		
Rated current / Rated cross section		5 A / 4 mm²		5 A / 12 AWG
Rated short-time withstand current (1s)		480 A		
Rated voltage		500 V		150 V
Impulse withstand voltage				
Protection		IP10	NEMA	

Mounting instructions

Rail	G32, TH 35-7.5, TH 35-15
Wire stripping length	9.5 mm 0.374 in
Tool	Flat screwdriver Ø 4 mm Ø 0.157 in
Torque	0.5 - 0.8 Nm 4.4 - 7.1 lb.in

The connecting capacity data for one Rigid: Solid/Stranded, or one Flexible conductor (when applicable) is a mandatory information required by IEC, UL and CSA standards (Copper conductors). All other data are provided as supplementary information only. For more details, please consult our CB, UL or CSA certificates and technical datasheet available on http://www.TE.com

CE RoHS CSA Gost R

Utilization of each type of plug

Number of operations: 200
On request, the plugs can be replaced by an insertable printed circuit for diagnosis testing.

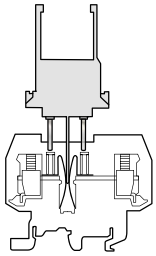

BNT1 ("voltage" plug)

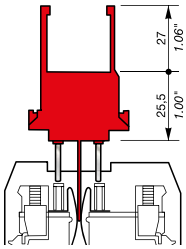

1st step: the plug cuts the circuit.
2nd step: the test circuit connection is made.

BNT2 ("polarity" plug)

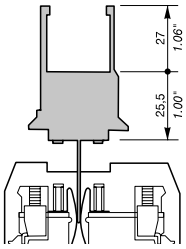

Plug not equipped with pins cuts the circuit.

BNT3 ("current" plug)

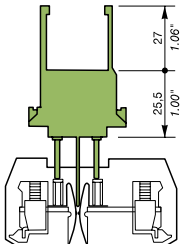

1st step: the test circuit is established
2nd step: the plug opens the circuit.

Accessories

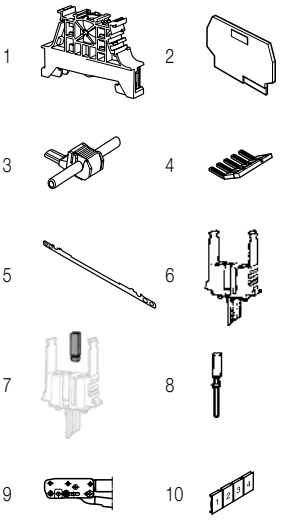

	Description			Color	Type	Part Number		Pkg pce	Weight (1 pce) g
1	**End stops**	10 mm	0.394 in	Dark grey	BAM4	1SNK900001R0000		50	14.00
		5.2 mm	0.205 in		BAZ1	1SNK900002R0000		50	5.30
2	**End sections**	2.5 mm	0.098 in	Grey	FEMT3	1SNA114328R2200		20	2.70
3	**Jumper bars**	1 poles	24 A	Grey	AD2.5	1SNA114205R2000		50	1.60
4	**Lateral jumper bars**	10 poles	35 A		PC61-10	1SNA163311R2200		10	5.00
5	**Shield connectors**				CBM5	1SNA178745R1400		50	
6	**Short circuit plugs**	"Polarity" plug		Grey	BNT2	1SNA114329R2300		20	3.00
		"Voltage" plug		Red	BNT1	1SNA199135R1700		20	8.00
		"Current" plug		Green	BNT3	1SNA199136R1000		20	8.00
7	**Assembly pins for plugs**				CVABM	1SNA183436R0500		10	0.40
8	**Pins**	0.5 mm²	24-20 AWG		BRC-0.5	1SNA174558R0500		10	1.40
		1 mm²	18 AWG		BRC-1	1SNA173906R2200		10	2.00
		1.5 mm²	16 AWG		BRC-1.5	1SNA173907R2300		10	2.00
		2.5 mm²	14 AWG		BRC-2.5	1SNA173908R0400		10	2.00
		4 mm²	12 AWG		BRC-4	1SNA174601R0100		10	2.00
9	**Tools**	Connecting capacity: 1 to 2.5 mm²			PSC	1SNA173181R1300		1	
10	**Terminal block markers**	Blank card		White	RC610	1SNA233000R0100		1	7.50

Complete list of accessories is indicated in the terminal block datasheet.
Some accessories such as jumper bars may modify the terminal block's ratings: complete information in the accessories catalogue pages.

Technical data valid for copper conductors only.

1SNC161140S0201 - Rev. A

M10/10.ST-Sn screw clamp terminal blocks

Test disconnect with plug - 10 mm 0.394 in spacing

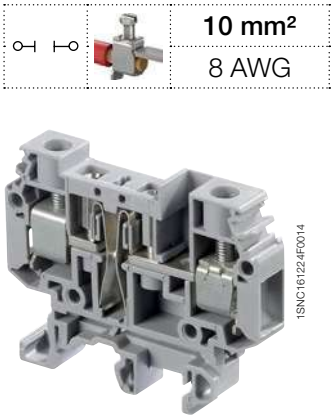

M10/10.ST-Sn

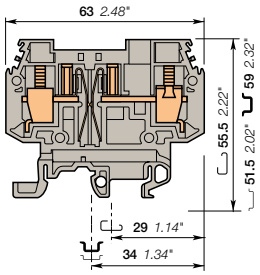

10 mm 0.394 in spacing

10 mm²	8 AWG

Description

- Test disconnect terminal blocks operated with plug,
- Dedicated "make before break" plug for current circuit (green plug) or "break before make" for voltage circuit (red plug).

Ordering details

Description		Color	Type	Part Number		Pkg pce	Weight (1 pce) g
Disconnect	Tinned contact blades	Grey	M10/10.ST-Sn	1SNA115539R1700		20	27.00

Main technical data

		IEC	UL	CSA
1 conductor per clamp	Rigid: Solid/Stranded	0.5-16 mm²		8 AWG
	Flexible without ferrule	0.5-10 mm²		
	Flexible with insulated ferrule			
	Gauge	B6		
Rated current / Rated cross section		15 A / 10 mm²		10 A / 8 AWG
Rated short-time withstand current (1s)		1200 A		
Rated voltage		500 V		300 V
Impulse withstand voltage				
Protection		IP20	NEMA 1	

Mounting instructions

Rail	G32, TH 35-7.5, TH 35-15
Wire stripping length	12 mm 0.472 in
Tool	Flat screwdriver Ø 5.5 - 6 mm Ø 0.217 - 0.236 in
Torque	1.2 - 1.4 Nm 10.6 - 12.3 lb.in

The connecting capacity data for one Rigid: Solid/Stranded, or one Flexible conductor (when applicable) is a mandatory information required by IEC, UL and CSA standards (Copper conductors). All other data are provided as supplementary information only. For more details, please consult our CB, UL or CSA certificates and technical datasheet available on http://www.TE.com

CE RoHS CSA Gost R

Utilization of each type of plug

Number of operations: 200
On request, the plugs can be replaced by an insertable printed circuit for diagnosis testing.

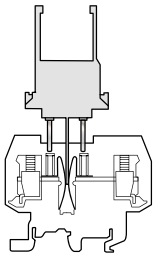

BNT1 ("voltage" plug)

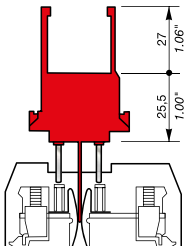

1st step: the plug cuts the circuit.
2nd step: the test circuit connection is made.

BNT2 ("polarity" plug)

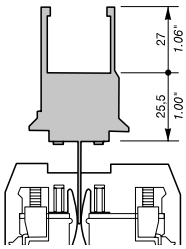

Plug not equipped with pins cuts the circuit.

BNT3 ("current" plug)

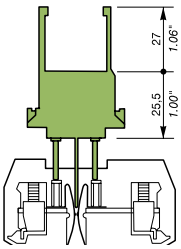

1st step: the test circuit is established
2nd step: the plug opens the circuit.

Accessories

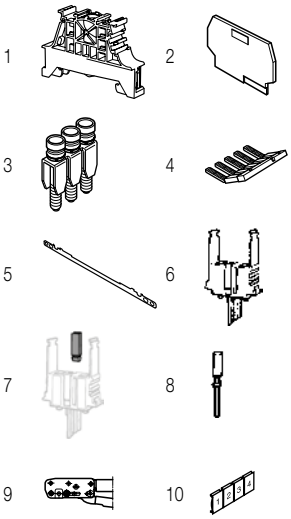

	Description			Color	Type	Part Number		Pkg pce	Weight (1 pce) g
1	**End stops**	10 mm	0.394 in	Dark grey	BAM4	1SNK900001R0000		50	14.00
		5.2 mm	0.205 in		BAZ1	1SNK900002R0000		50	5.30
2	**End sections**	2.5 mm	0.098 in	Grey	FEMT5	1SNA116781R1300		20	3.00
3	**Jumper bars**	2 poles	57 A		BJMI10-2	1SNA176675R0400		10	5.00
		3 poles			BJMI10-3	1SNA176676R0500		10	8.00
		4 poles			BJMI10-4	1SNA176677R0600		10	11.00
		5 poles			BJMI10-5	1SNA176678R1700		10	13.00
		10 poles			BJMI10-10	1SNA176679R1000		10	27.00
4	**Lateral jumper bars**	10 poles	70 A		PC10-10	1SNA163315R2600		10	23.00
5	**Shield connectors**				CBM5	1SNA178745R1400		50	
6	**Short circuit plugs**	"Polarity" plug		Grey	BNT2	1SNA114329R2300		20	3.00
		"Voltage" plug		Red	BNT1	1SNA199135R1700		20	8.00
		"Current" plug		Green	BNT3	1SNA199136R1000		20	8.00
7	**Assembly pins for plugs**				CVABM1	1SNA116783R1500		20	
8	**Pins**	0.5 mm²	24-20 AWG		BRC-0.5	1SNA174558R0500		10	1.40
		1 mm²	18 AWG		BRC-1	1SNA173906R2200		10	2.00
		1.5 mm²	16 AWG		BRC-1.5	1SNA173907R2300		10	2.00
		2.5 mm²	14 AWG		BRC-2.5	1SNA173908R0400		10	2.00
		4 mm²	12 AWG		BRC-4	1SNA174601R0100		10	2.00
9	**Tools**	Connecting capacity: 1 to 2.5 mm²			PSC	1SNA173181R1300		1	
10	**Terminal block markers**	Blank card		White	RC1010	1SNA238000R1600		1	1.30

Complete list of accessories is indicated in the terminal block datasheet.
Some accessories such as jumper bars may modify the terminal block's ratings: complete information in the accessories catalogue pages.

Technical data valid for copper conductors only.

1SNC161147S0201 - Rev. A

M6/8.STP screw clamp terminal blocks

Disconnect with push-turn knob - with test socket - 8 mm 0.315 in spacing

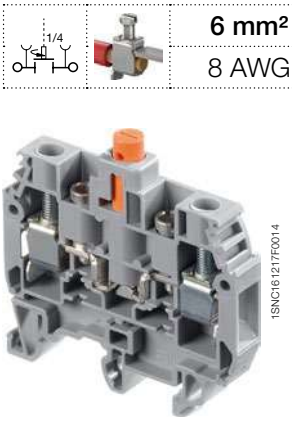

6 mm²
8 AWG

M6/8.STP

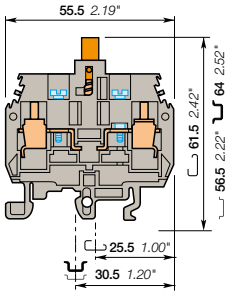

8 mm 0.315 in spacing

Description

- Ease your disconnect operations with the disconnect ¼ turn push-turn knob,
- Possibility to seal in the open and closed position,
- Ease your test operations with the built-in test socket.

Ordering details

Description		Color	Type	Part Number		Pkg qty	Weight (1 pce) g
Disconnect	With 2 test sockets DIA 4 mm 0.157 in	Grey, orange	M6/8.STP1	1SNA115529R1500		25	21.00

Main technical data

Connecting capacity		IEC	UL	CSA
1 conductor per clamp	Rigid: Solid/Stranded	0.5-10 mm²		8 AWG
	Flexible without ferrule	0.5-6 mm²		
	Flexible with insulated ferrule			
	Gauge			
Rated current / Rated cross section		15 A / 6 mm²		15 A / 8 AWG
Rated short-time withstand current (1s)		720 A		
Rated voltage		500 V		600 V
Impulse withstand voltage				
Protection		IP10	NEMA	

Mounting instructions

Rail	G32, TH 35-7.5, TH 35-15
Wire stripping length	11 mm 0.433 in
Tool	Flat screwdriver Ø 4 mm Ø 0.157 in
Torque	0.8 - 1 N.m 7.1 - 8.9 lb.in

The connecting capacity data for one Rigid: Solid/Stranded, or one Flexible conductor (when applicable) is a mandatory information required by IEC, UL and CSA standards (Copper conductors). All other data are provided as supplementary information only. For more details, please consult our CB, UL or CSA certificates and technical datasheet available on http://www.TE.com

RoHS CSA Gost R

Notes

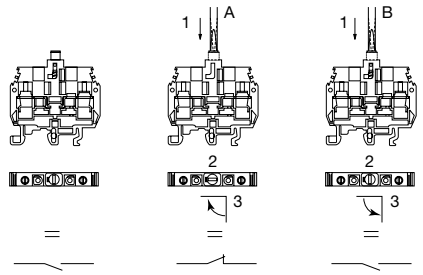

A: Closing operation
B: Opening operation
1: Push
2: Turn
3: Stop

Accessories

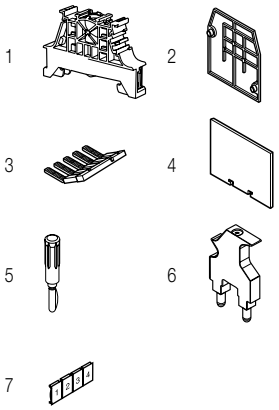

	Description			Color	Type	Part Number		Pkg qty	Weight (1 pce) g
1	**End stops**	10 mm	0.394 in	Dark grey	BAM4	1SNK900001R0000		50	14.00
		9 mm	0.354 in		BAZ1	1SNK900002R0000		50	4.70
2	**End sections**	2.8 mm	0.110 in	Grey	FEMT1	1SNA113137R0200		50	2.00
3	**Lateral jumper bars**	2 poles	50 A		PC8-2	1SNA116538R1700		10	3.00
		3 poles			PC8-3	1SNA116539R1000		10	4.00
		4 poles			PC8-4	1SNA116540R2500		10	6.00
		10 poles			PC8-10	1SNA163313R2400		10	14.00
4	**Circuit separators**	1 mm	0.039 in	Grey	SCFT1	1SNA103588R2600		20	20.00
5	**Test plugs**	DIA 4 mm 0.157 in		White	FC4	1SNA167860R0100		10	10.00
		DIA 4 mm 0.157 in IP20		Red	FC4-1	1SNA167927R1000		10	11.00
6	**Short circuit plugs**	DIA 4 mm 0.157 in			BP8.A4	1SNA173888R2000		10	
				Red	BNSTP2	1SNA196789R2400		20	10.00
		With test DIA 4 mm 0.157 in		Beige	BNSTP1	1SNA196792R1700		20	14.00
7	**Terminal block markers**	Blank card		White	RC810	1SNA234000R0200		1	8.20

Complete list of accessories is indicated in the terminal block datasheet.
Some accessories such as jumper bars may modify the terminal block's ratings: complete information in the accessories catalogue pages.

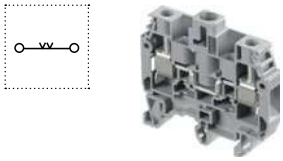

Feed-through screw clamp terminal blocks

Description		Color	Type	Part Number		Pkg qty	Weight (1 pce) g
Feed-through	Profile aligned with M6/8 STP...	Grey	M6/8.STP3	1SNA115500R2500		25	21.00

Technical data valid for copper conductors only.

M6/8.STP screw clamp terminal blocks

Disconnect with push-turn knob - with test socket - 8 mm 0.315 in spacing

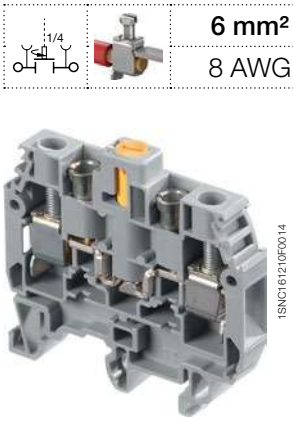

6 mm²
8 AWG

M6/8.STP

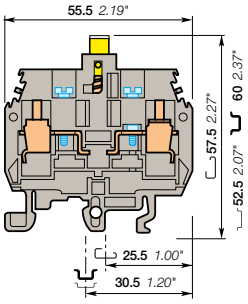

8 mm 0.315 in spacing

Description

- Ease your disconnect operations with the disconnect ¼ turn push-turn knob,
- Possibility to seal in the open position,
- Ease your test operations with the built-in test socket.

Ordering details

Description		Color	Type	Part Number		Pkg qty	Weight (1 pce) g
Disconnect	With 2 test sockets DIA 4 mm 0.157 in	Grey, yellow	M6/8.STP	1SNA115277R2000		25	21.00
		Grey, black	M6/8.STP	1SNA105141R2700		25	21.00
		Grey, red	M6/8.STP	1SNA105142R2000		25	21.00

Main technical data

Connecting capacity		IEC	UL	CSA
1 conductor per clamp	Rigid: Solid/Stranded	0.5-10 mm²	22-8 AWG	8 AWG
	Flexible without ferrule	0.5-6 mm²		
	Flexible with insulated ferrule			
	Gauge			
Rated current / Rated cross section		15 A / 6 mm²	40 A / 8 AWG	15 A / 8 AWG
Rated short-time withstand current (1s)		180 A		
Rated voltage		500 V	600 V	600 V
Impulse withstand voltage				
Protection		IP10	NEMA	

Mounting instructions

Rail		G32, TH 35-7.5, TH 35-15
Wire stripping length		11 mm 0.433 in
Tool		Flat screwdriver Ø 4 mm Ø 0.157 in
Torque		0.8 - 1 N.m 7.1 - 8.9 lb.in

The connecting capacity data for one Rigid: Solid/Stranded, or one Flexible conductor (when applicable) is a mandatory information required by IEC, UL and CSA standards (Copper conductors). All other data are provided as supplementary information only. For more details, please consult our CB, UL or CSA certificates and technical datasheet available on http://www.TE.com

RoHS USR CSA Gost R

Notes

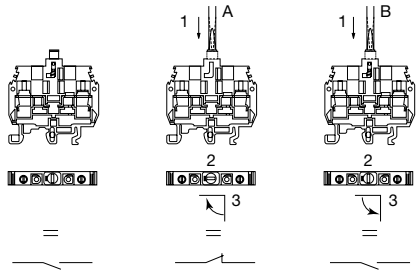

A: Closing operation
B: Opening operation
1: Push
2: Turn
3: Stop

Accessories

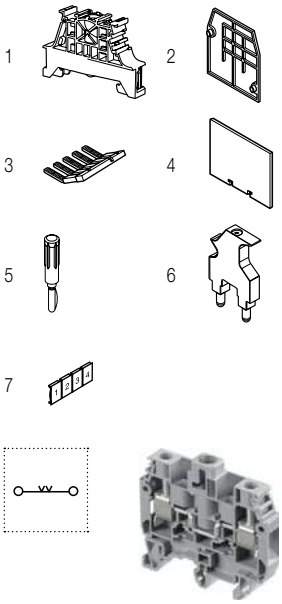

	Description			Color	Type	Part Number		Pkg qty	Weight (1 pce) g
1	**End stops**	10 mm	0.394 in	Dark grey	BAM4	1SNK900001R0000		50	14.00
		9 mm	0.354 in		BAZ1	1SNK900002R0000		50	4.70
2	**End sections**	2.8 mm	0.110 in	Grey	FEMT1	1SNA113137R0200		50	2.00
3	**Lateral jumper bars**	2 poles	50 A		PC8-2	1SNA116538R1700		10	3.00
		3 poles			PC8-3	1SNA116539R1000		10	4.00
		4 poles			PC8-4	1SNA116540R2500		10	6.00
		10 poles			PC8-10	1SNA163313R2400		10	14.00
4	**Circuit separators**	1 mm	0.039 in	Grey	SCFT1	1SNA103588R2600		20	20.00
5	**Test plugs**	DIA 4 mm 0.157 in		White	FC4	1SNA167860R0100		10	10.00
		DIA 4 mm 0.157 in IP20		Red	FC4-1	1SNA167927R1000		10	11.00
6	**Short circuit plugs**	DIA 4 mm 0.157 in			BP8.A4	1SNA173888R2000		10	
				Red	BNSTP2	1SNA196789R2400		20	10.00
		With test DIA 4 mm 0.157 in		Beige	BNSTP1	1SNA196792R1700		20	14.00
7	**Terminal block markers**	Blank card		White	RC810	1SNA234000R0200		1	8.20

Complete list of accessories is indicated in the terminal block datasheet.
Some accessories such as jumper bars may modify the terminal block's ratings: complete information in the accessories catalogue pages.

Feed-through screw clamp terminal blocks

Description		Color	Type	Part Number		Pkg qty	Weight (1 pce) g
Feed-through	Profile aligned with M6/8 STP...	Grey	M6/8.STP3	1SNA115500R2500		25	21.00

Technical data valid for copper conductors only.

D6/8.ST.RS spring loaded screw clamp terminal blocks

Test disconnect with a screwdriver sliding link - 8 mm 0.315 in spacing

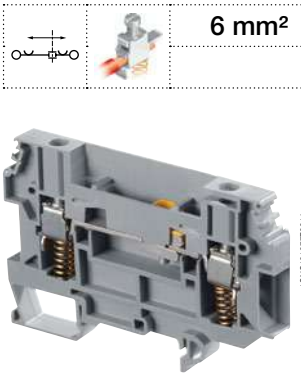

6 mm²

1SNC161277F0014

D6/8.ST.RS

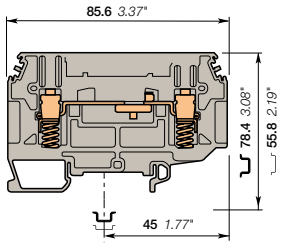

8 mm 0.315 in spacing

Description

- Mainly dedicated to energy markets for security purposes on CT circuits,
- Security: specific shape in linking bar to lock the ferrule, spring clamp can maintain contact pressure even if screw clamp is loose.

Ordering details

Description	Color	Type	Part Number		Pkg pce	Weight (1 pce) g
Disconnect	Grey	D6/8.ST.RS	1SNA115914R0700		32	28.00

Main technical data

		IEC	BS TS 5018	CSA
1 conductor per clamp	Rigid: Solid/Stranded	0.5-10 mm²		
	Flexible without ferrule	0.5-6 mm²		
	Flexible with insulated ferrule			
Lugs	Flexible with insulated ferrule		0.28-2.5 mm²	
	Gauge	A5		
Rated current / Rated cross section		24 A / 6 mm²		
Rated short-time withstand current (1s)		720 A		
Rated voltage		400 V		
Impulse withstand voltage		6000 V		
Protection			NEMA	

Mounting instructions

Rail		G32, TH 35-7.5, TH 35-15
Wire stripping length		16 mm 0.51 in
Tool		Flat screwdriver Ø 3.5 mm Ø 0.138 in
Torque		0.8 - 1 Nm 7.1 - 8.9 lb.in

The connecting capacity data for one Rigid: Solid/Stranded, or one Flexible conductor (when applicable) is a mandatory information required by IEC, UL and CSA standards (Copper conductors). All other data are provided as supplementary information only. For more details, please consult our CB, UL or CSA certificates and technical datasheet available on http://www.TE.com

CE RoHS Gost R

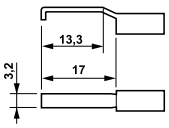

Each screw clamp holds up to 2 bent lugs as shown (not supplied)

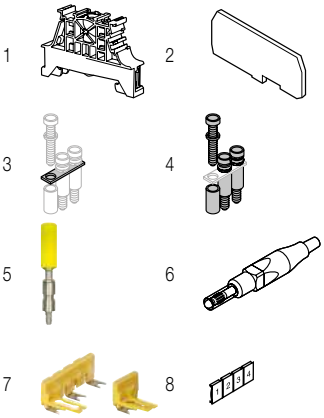

Accessories

	Description			Color	Type	Part Number		Pkg pce	Weight (1 pce) g
1	End stops	End stops	0.394 in	Dark grey	BAM4	1SNK900001R0000		50	14.00
			0.205 in		BAZ1	1SNK900002R0000		50	5.30
2	End sections	1 mm	0.039 in	Grey	FEM8T6	1SNA215266R0100		10	4.40
3	Jumper bars	2 poles	41 A		BJS8	1SNA164581R1300		10	3.10
		3 poles				1SNA164582R1400		10	3.10
		4 poles				1SNA164583R1500		10	3.10
		20 poles			BJS8-20	1SNA174789R0500		5	3.20
4	Fastening kits	Sub assembly post + screw + washer			EV6I	1SNA206394R0200		20	2.00
5	Test sockets	DIA 4 mm 0.157 in IP20		Yellow	AJS9	1SNA179726R0200		25	3.60
				Black	AJS9-1	1SNA206680R1500		25	3.60
				Green	AJS9-2	1SNA206681R0200		25	3.60
				Grey	AJS9-3	1SNA206682R0300		25	3.60
				Blue	AJS9-4	1SNA206683R0400		25	3.60
				Red	AJS9-5	1SNA206720R1400		25	3.60
		DIA 4 mm 0.157 in			AL4-M3	1SNA206721R0100		50	1.10
6	Test plugs	DIA 4 mm 0.157 in IP20		Red	FC4-1	1SNA167927R1000		10	11.00
7	Short circuit bridges	2 poles		Yellow	SC-JB8-2	1SNK900652R0000		25	2.00
		3 poles			SC-JB8-3	1SNK900653R0000		25	3.40
		4 poles			SC-JB8-4	1SNK900654R0000		25	4.70
8	Terminal block markers	Blank card		White	RC810	1SNA234000R0200		1	8.20

Complete list of accessories is indicated in the terminal block datasheet.
Some accessories such as jumper bars may modify the terminal block's ratings: complete information in the accessories catalogue pages.

Technical data valid for copper conductors only.

1SNC161153S0201 - Rev. A

D6/8.ST.RS spring loaded screw clamp terminal blocks

Test disconnect with a screwdriver sliding link - 8 mm 0.315 in spacing

6 mm²

1SNC161233F0014

D6/8.ST.RS

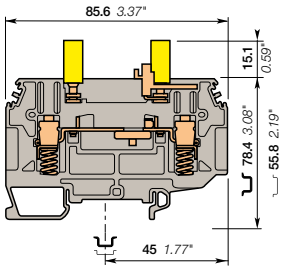

8 mm 0.315 in spacing

Description

- Mainly dedicated to energy markets for security purposes on CT circuits,
- Security: specific shape in linking bar to lock the ferrule, spring clamp can maintain contact pressure even if screw clamp is loose.

Ordering details

Description		Color	Type	Part Number		Pkg pce	Weight (1 pce) g
Disconnect	With 2 yellow test sockets DIA 4 mm 0.157 in	Grey	D6/8.ST1.RS.IP20	1SNA115831R0400		32	38.00

Main technical data

		IEC	BS TS 5018	CSA
1 conductor per clamp	Rigid: Solid/Stranded	0.5-10 mm²		
	Flexible without ferrule	0.5-6 mm²		
	Flexible with insulated ferrule			
Lugs	Flexible with insulated ferrule		0.28-2.5 mm²	
	Gauge	A5		
Rated current / Rated cross section		24 A / 6 mm²		
Rated short-time withstand current (1s)		720 A		
Rated voltage		400 V		
Impulse withstand voltage		6000 V		
Protection			NEMA	

Mounting instructions

Rail	G32, TH 35-7.5, TH 35-15
Wire stripping length	16 mm 0.51 in
Screw clamp Tool	Flat screwdriver Ø 3.5 mm Ø 0.138 in
Torque	0.8 - 1 Nm 7.1 - 8.9 lb.in
Disconnect device Tool	Flat screwdriver Ø 3.5 mm Ø 0.138 in
Torque	0.4 - 0.6 N.m 3.5 - 5.3 lb.in
Test socket Tool	Ø 3.5 mm Ø 0.138 in
Torque	0.6 N.m 5.34 lb.in

The connecting capacity data for one Rigid: Solid/Stranded, or one Flexible conductor (when applicable) is a mandatory information required by IEC, UL and CSA standards (Copper conductors). All other data are provided as supplementary information only. For more details, please consult our CB, UL or CSA certificates and technical datasheet available on http://www.TE.com

CE RoHS Gost R

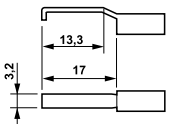

Each screw clamp holds up to 2 bent lugs as shown (not supplied)

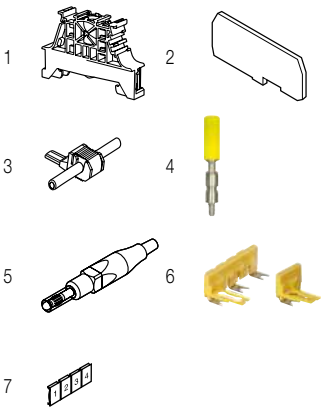

Accessories

	Description			Color	Type	Part Number		Pkg pce	Weight (1 pce) g
1	**End stops**	10 mm	0.394 in	Dark grey	BAM4	1SNK900001R0000		50	14.00
		5.2 mm	0.205 in		BAZ1	1SNK900002R0000		50	5.30
2	**End sections**	1 mm	0.039 in	Grey	FEM8T6	1SNA215266R0100		10	4.40
3	**Jumper bars**	1 poles	24 A	Grey	AD2.5	1SNA114205R2000		50	1.60
4	**Test sockets**	DIA 4 mm 0.157 in IP20		Black	AJS9-1	1SNA206680R1500		25	3.60
				Green	AJS9-2	1SNA206681R0200		25	3.60
				Grey	AJS9-3	1SNA206682R0300		25	3.60
				Blue	AJS9-4	1SNA206683R0400		25	3.60
				Red	AJS9-5	1SNA206720R1400		25	3.60
5	**Test plugs**	DIA 4 mm 0.157 in IP20		Red	FC4-1	1SNA167927R1000		10	11.00
6	**Short circuit bridges**	2 poles		Yellow	SC-JB8-2	1SNK900652R0000		25	2.00
		3 poles			SC-JB8-3	1SNK900653R0000		25	3.40
		4 poles			SC-JB8-4	1SNK900654R0000		25	4.70
7	**Terminal block markers**	Blank card		White	RC810	1SNA234000R0200		1	8.20

Complete list of accessories is indicated in the terminal block datasheet.
Some accessories such as jumper bars may modify the terminal block's ratings: complete information in the accessories catalogue pages.

Technical data valid for copper conductors only.

1SNC161095S0201 - Rev. A

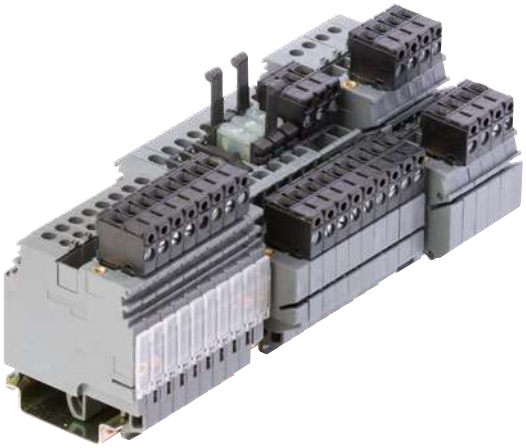

1SNC164011S0201

Dedicated applications terminal blocks
Pluggable

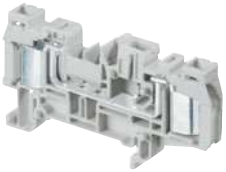

Technologies presentation			174
Overview			175

Screw clamp technology

Feed-through

2.5 mm² / 12 AWG	**MA2.5/5-CPE**		176
	MA2.5/5-2CPE		178

Double deck

2.5 mm² / 12 AWG	**MA2.5/5D2-2CPE**	2 feed-through circuits	180
	MA2.5/5.D-2CPE	1 feed-through circuit	181

Disconnect with blade

2.5 mm² / 12 AWG	**MA2.5/5-SNB-CPE**		182

ADO technology

Feed-through

1.5 mm² / 16 AWG	**D1.5/7.ADO-CPE**	1 ADO - 1 pluggable	183
	D1.5/7.2ADO-CPE	2 ADO - 1 pluggable	185
2.5 mm² / 14 AWG	**D2.5/7.ADO-CPE**	1 ADO - 1 pluggable	184
	D2.5/7.2ADO-CPE	2 ADO - 1 pluggable	186

1SNC164011S0201

Optimize your equipment assembly process!

TE connectivity's pluggable terminal blocks offer the possibility to use pre-assembled cables and connectors which improve wiring efficiency.
Pluggable technology offers following advantages:

- Wiring can be pre-defined and pre-tested before final assembling
- During assembling, the pre-assembled cables help in saving time (plug & play solution) and reduce wiring errors
- During servicing, rail assemblies or components can be quickly replaced.

The preferred solution for OEM's and panel builders handling cabinets made of multiple separate modules.

CE RoHS ISO 9001

A large choice of solutions and technologies

Screw clamp pluggable technology

TE connectivity's screw clamp pluggable range combines the advantage of a fast connection associated with the standard easy to use screw technology.
The range features various functions such as: feed-through, neutral, double deck, disconnect and fuse.

PI-Spring screwless pluggable technology

Our PI-Spring pluggable range combines fast assembly and fast wiring thanks to our exclusive tool-free direct insertion connection technology.
The range features functions adapted to OEM's applications such as 2 jumper channels for distribution, testing,high density wiring with dual connection on both side.
Find more in out SNK series catalog.

ADO System® screwless pluggable technology

Combines fast assembly with the Fastest and the Most Reliable Connection on the Market.
Our ADO System® range features high ratings 4 mm²/24 A max and high density wiring with dual connection and up to 2 wires per ADO System® connection.

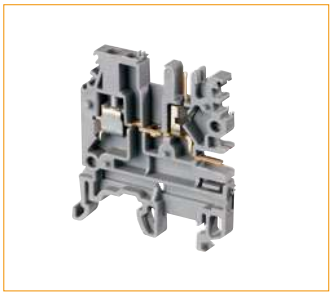

Screw clamp pluggable terminal block

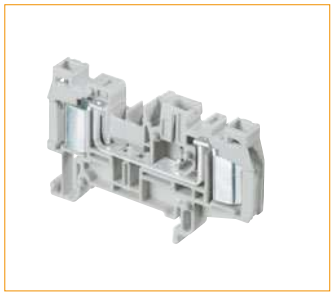

ADO System® pluggable terminal block

1SNC164010S0201

Screw clamp technology

Section		Feed-through		Double deck	
IEC	UL/CSA				
2.5 mm²	12 AWG	MA2.5/5-CPE 5 mm 0.197 in	MA2.5/5-2CPE 5 mm 0.197 in	MA2.5/5D2-2CPE 5 mm 0.197 in	MA2.5/5.D-2CPE 5 mm 0.197 in

Disconnect with blade

Section		
IEC	UL/CSA	
2.5 mm²	12 AWG	MA2.5/5-SNB-CPE 5 mm 0.197 in

ADO technology

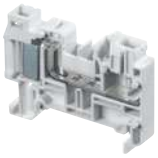
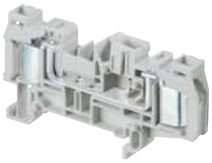

Feed-through

Section			
IEC	UL/CSA		
1.5 mm²	16 AWG	D1.5/7.ADO-CPE 7.62 mm 0.300 in	D1.5/7.2ADO-CPE 7.62 mm 0.300 in
2.5 mm²	14 AWG	D2.5/7.ADO-CPE 7.62 mm 0.300 in	D2.5/7.2ADO-CPE 7.62 mm 0.300 in

1SNC160060S0201

MA2.5/5-CPE pluggable terminal blocks

Feed-through - 5.08 mm 0.200 in spacing

2.5 mm²
12 AWG

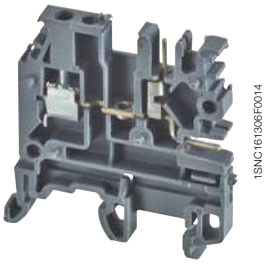

MA2.5/5-CPE

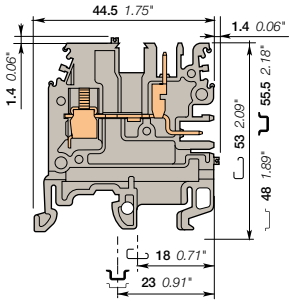

5.08 mm 0.200 in spacing

Description

- Save in flexibility, reliability and simplicity thanks to the pluggable terminal blocks,
- They are particularly well adapted to solve the connecting problems of equipment composed of sub-assemblies (complex machines such as elevators or trains, panel boards with extension boxes...),
- They can then be easily connected through patchcords with CPFT2 plugs connected to the pluggable terminal blocks outputs.

Ordering details

Description		Color	Type	Part Number		Pkg pce	Weight (1 pce) g
Feed-through	1 feed-through circuit	Grey	MA2.5/5-CPE	1SNA400814R0000		50	7.00
		Blue	MA2.5/5-CPE	1SNA400827R0000		50	7.00

Main technical data

		IEC	UL	CSA
1 conductor per clamp	Rigid: Solid/Stranded	0.2-4 mm²	24-12 AWG	
	Flexible without ferrule	0.22-2.5 mm²		
	Flexible with insulated ferrule			
	Gauge	A3		
Rated current / Rated cross section		12 A / 2.5 mm²	10 A / 12 AWG	
Rated short-time withstand current (1s)		300 A		
Rated voltage		320 V	300 V	
Impulse withstand voltage		4000 V		
Protection		IP20	NEMA 1	

Mounting instructions

Rail	G32, TH 35-7.5, TH 35-15
Wire stripping length	8.5 mm 0.33 in
Tool	Flat screwdriver Ø 3.5 mm Ø 0.138 in
Torque	0.4 - 0.6 Nm 3.5 - 5.3 lb.in

The connecting capacity data for one Rigid: Solid/Stranded, or one Flexible conductor (when applicable) is a mandatory information required by IEC, UL and CSA standards (Copper conductors). All other data are provided as supplementary information only. For more details, please consult our CB, UL or CSA certificates and technical datasheet available on http://www.TE.com

CE RoHS USR CNR cCSAus Gost R

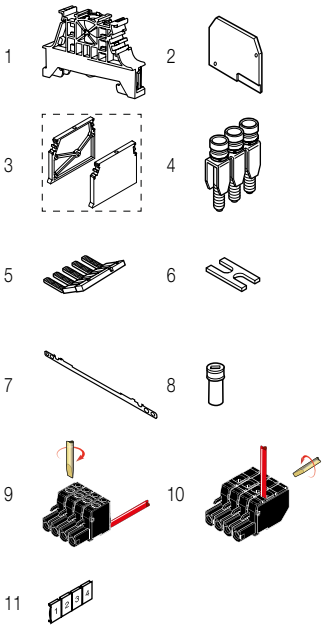

Accessories

	Description				Color	Type	Part Number		Pkg pce	Weight (1 pce) g
1	**End stops**	10 mm	0.394 in		Dark grey	BAM4	1SNK900001R0000		50	14.00
		5.2 mm	0.205 in			BAZ1	1SNK900002R0000		50	5.30
2	**End sections**	2.8 mm	0.110 in		Grey	FEM6	1SNA400824R0000		20	2.40
3	**End section-flange kit (R+L)**				Grey	ENS.FE-BCP	1SNA400819R0000		10	7.00
4	**Jumper bars**	2 poles	24 A			BJMI5-2	1SNA176278R1600		10	3.30
		3 poles				BJMI5-3	1SNA176279R1700		10	5.00
		4 poles				BJMI5-4	1SNA176280R0500		10	6.70
		10 poles				BJMI5-10	1SNA176282R2300		10	16.90
5	**Lateral jumper bars**	2 poles	30 A		Grey	PC5-2	1SNA113542R1000		10	1.80
		10 poles				PC5-10	1SNA113544R1200		10	6.00
6	**Cross spacing jumpers**	5 mm 0.200 in - 6 mm 0.236 in - 8 mm 0.315 in				EL6	1SNA173627R2100		10	0.10
7	**Shield connectors**					CBM5	1SNA178745R1400		50	
8	**Coding pegs**					COCF 32	1SNA173660R1600		10	0.10
						COC 1	1SNA299777R1600		10	
9	**Female plugs wires parallel**	5.08 mm	0.200 in	2 poles	Black	CPFT2/2	1SNA094302R2100		120	3.20
				3 poles		CPFT2/3	1SNA094303R2200		80	4.80
				4 poles		CPFT2/4	1SNA094304R2300		60	6.40
				10 poles		CPFT2/10	1SNA094310R2400		20	16.00
10	**Female plugs wires perpendicular**	5.08 mm	0.200 in	2 poles	Black	CPFT2/R-2	1SNA094352R2200		120	3.80
				3 poles		CPFT2/R-3	1SNA094353R2300		80	5.70
				4 poles		CPFT2/R-4	1SNA094354R2400		60	7.60
				10 poles		CPFT2/R-10	1SNA094360R0600		20	19.00
11	**Terminal block markers**	Blank card			White	RC510	1SNA231000R0700		1	5.20

Complete list of accessories is indicated in the terminal block datasheet.
Some accessories such as jumper bars may modify the terminal block's ratings: complete information in the accessories catalogue pages.

Technical data valid for copper conductors only.

1SNC164001S0201 - Rev. B

MA2.5/5-CPE pluggable terminal blocks

Feed-through - 5.08 mm 0.200 in spacing

2.5 mm²
12 AWG

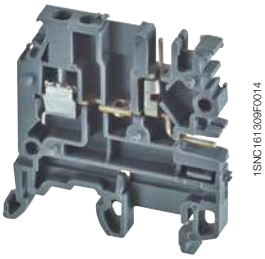

MA2.5/5-CPE

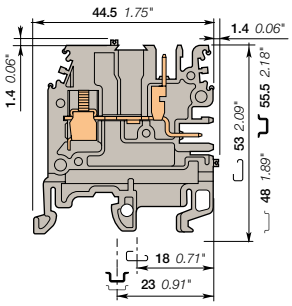

5.08 mm 0.200 in spacing

Description

- Save in flexibility, reliability and simplicity thanks to the pluggable terminal blocks,
- They are particularly well adapted to solve the connecting problems of equipment composed of sub-assemblies (complex machines such as elevators or trains, panel boards with extension boxes...),
- They can then be easily connected through patchcords with CPFT2 plugs connected to the pluggable terminal blocks outputs.

Ordering details

Description		Color	Type	Part Number		Pkg pce	Weight (1 pce) g
Feed-through	1 feed-through circuit with partition	Grey	MA2.5/5-CPE.1	1SNA400822R0000		50	7.00

Main technical data

		IEC	UL	CSA
1 conductor per clamp	Rigid: Solid/Stranded	0.2-4 mm²	24-12 AWG	
	Flexible without ferrule	0.22-2.5 mm²		
	Flexible with insulated ferrule			
	Gauge	A3		
Rated current / Rated cross section		12 A / 2.5 mm²	10 A / 12 AWG	
Rated short-time withstand current (1s)		300 A		
Rated voltage		320 V	300 V	
Impulse withstand voltage		4000 V		
Protection		IP20	NEMA 1	

The connecting capacity data for one Rigid: Solid/Stranded, or one Flexible conductor (when applicable) is a mandatory information required by IEC, UL and CSA standards (Copper conductors). All other data are provided as supplementary information only. For more details, please consult our CB, UL or CSA certificates and technical datasheet available on http://www.TE.com

CE RoHS USR CNR cCSAus Gost R

Mounting instructions

Rail		G32, TH 35-7.5, TH 35-15
Wire stripping length		8.5 mm 0.33 in
Tool		Flat screwdriver Ø 3.5 mm Ø 0.138 in
Torque		0.4 - 0.6 Nm 3.5 - 5.3 lb.in

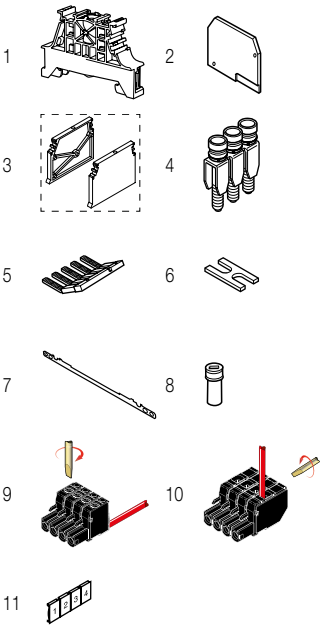

Accessories

	Description				Color	Type	Part Number		Pkg pce	Weight (1 pce) g
1	**End stops**	10 mm	0.394 in		Dark grey	BAM4	1SNK900001R0000		50	14.00
		5.2 mm	0.205 in			BAZ1	1SNK900002R0000		50	5.30
2	**End sections**	2.8 mm	0.110 in		Grey	FEM6	1SNA400824R0000		20	2.40
3	**End section-flange kit (R+L)**					ENS.FE-BCP	1SNA400819R0000		10	7.00
4	**Jumper bars**	2 poles	24 A			BJMI5-2	1SNA176278R1600		10	3.30
		3 poles				BJMI5-3	1SNA176279R1700		10	5.00
		4 poles				BJMI5-4	1SNA176280R0500		10	6.70
		10 poles				BJMI5-10	1SNA176282R2300		10	16.90
5	**Lateral jumper bars**	2 poles	30 A		Grey	PC5-2	1SNA113542R1000		10	1.80
		10 poles				PC5-10	1SNA113544R1200		10	6.00
6	**Cross spacing jumpers**	5 mm 0.200 in - 6 mm 0.236 in - 8 mm 0.315 in				EL6	1SNA173627R2100		10	0.10
7	**Shield connectors**					CBM5	1SNA178745R1400		50	
8	**Coding pegs**					COCF 32	1SNA173660R1600		10	0.10
						COC 1	1SNA299777R1600		10	
9	**Female plugs wires parallel**	5.08 mm	0.200 in	2 poles	Black	CPFT2/2	1SNA094302R2100		120	3.20
				3 poles		CPFT2/3	1SNA094303R2200		80	4.80
				4 poles		CPFT2/4	1SNA094304R2300		60	6.40
				10 poles		CPFT2/10	1SNA094310R2400		20	16.00
10	**Female plugs wires perpendicular**	5.08 mm	0.200 in	2 poles	Black	CPFT2/R-2	1SNA094352R2200		120	3.80
				3 poles		CPFT2/R-3	1SNA094353R2300		80	5.70
				4 poles		CPFT2/R-4	1SNA094354R2400		60	7.60
				10 poles		CPFT2/R-10	1SNA094360R0600		20	19.00
11	**Terminal block markers**	Blank card			White	RC510	1SNA231000R0700		1	5.20

Complete list of accessories is indicated in the terminal block datasheet.
Some accessories such as jumper bars may modify the terminal block's ratings: complete information in the accessories catalogue pages.

Technical data valid for copper conductors only.

1SNC164002S0201 - Rev. B

MA2.5/5-2CPE pluggable terminal blocks

Feed-through - 5.08 mm 0.200 in spacing

2.5 mm²
12 AWG

MA2.5/5-2CPE

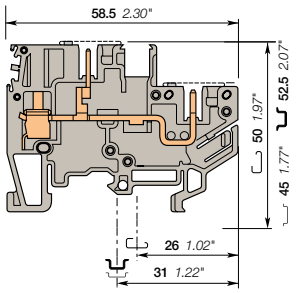

5.08 mm 0.200 in spacing

Description

- Save in flexibility, reliability and simplicity thanks to the pluggable terminal blocks,
- They are particularly well adapted to solve the connecting problems of equipment composed of sub-assemblies (complex machines such as elevators or trains, panel boards with extension boxes...),
- They can then be easily connected through patchcords with CPFT2 plugs connected to the pluggable terminal blocks outputs.

Ordering details

Description		Color	Type	Part Number		Pkg pce	Weight (1 pce) g
Feed-through	1 feed-through circuit	Grey	MA2.5/5-2CPE	1SNA400817R0000		50	7.00
		Blue	MA2.5/5-2CPE	1SNA125711R1500		50	7.00

Main technical data

		IEC	UL	CSA
1 conductor per clamp	Rigid: Solid/Stranded	0.2-4 mm²	24-12 AWG	
	Flexible without ferrule	0.22-2.5 mm²		
	Flexible with insulated ferrule			
	Gauge	A3		
Rated current / Rated cross section		12 A / 2.5 mm²	10 A / 12 AWG	
Rated short-time withstand current (1s)		300 A		
Rated voltage		320 V	300 V	
Impulse withstand voltage		4000 V		
Protection		IP20	NEMA 1	

The connecting capacity data for one Rigid: Solid/Stranded, or one Flexible conductor (when applicable) is a mandatory information required by IEC, UL and CSA standards (Copper conductors). All other data are provided as supplementary information only. For more details, please consult our CB, UL or CSA certificates and technical datasheet available on http://www.TE.com

CE RoHS USR CNR Gost R

Mounting instructions

Rail	G32, TH 35-7.5, TH 35-15
Wire stripping length	10 mm 0.394 in
Tool	Flat screwdriver Ø 3.5 mm Ø 0.138 in
Torque	0.4 - 0.6 Nm 3.5 - 5.3 lb.in

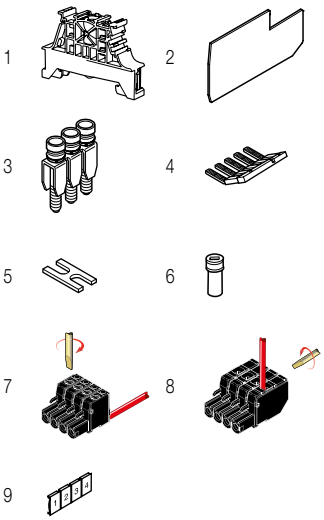

Accessories

	Description				Color	Type	Part Number		Pkg pce	Weight (1 pce) g
1	**End stops**	10 mm	0.394 in		Dark grey	BAM4	1SNK900001R0000		50	14.00
		5.2 mm	0.205 in			BAZ1	1SNK900002R0000		50	5.30
2	**End sections**	2.8 mm	0.110 in		Grey	FE2CPE	1SNA400826R0000		20	2.50
3	**Jumper bars**	2 poles	24 A			BJMI5-2	1SNA176278R1600		10	3.30
		3 poles				BJMI5-3	1SNA176279R1700		10	5.00
		4 poles				BJMI5-4	1SNA176280R0500		10	6.70
		5 poles				BJMI5-5	1SNA176281R2200		10	8.40
		10 poles				BJMI5-10	1SNA176282R2300		10	16.90
4	**Lateral jumper bars**	2 poles	30 A		Grey	PC5-2	1SNA113542R1000		10	1.80
		10 poles				PC5-10	1SNA113544R1200		10	6.00
5	**Cross spacing jumpers**	5 mm 0.200 in - 6 mm 0.236 in - 8 mm 0.315 in				EL6	1SNA173627R2100		10	0.10
6	**Coding pegs**					COCF 32	1SNA173660R1600		10	0.10
						COC 1	1SNA299777R1600		10	
7	**Female plugs wires parallel**	5.08 mm	0.200 in	2 poles	Black	CPFT2/2	1SNA094302R2100		120	3.20
				3 poles		CPFT2/3	1SNA094303R2200		80	4.80
				4 poles		CPFT2/4	1SNA094304R2300		60	6.40
				10 poles		CPFT2/10	1SNA094310R2400		20	16.00
8	**Female plugs wires perpendicular**	5.08 mm	0.200 in	2 poles	Black	CPFT2/R-2	1SNA094352R2200		120	3.80
				3 poles		CPFT2/R-3	1SNA094353R2300		80	5.70
				4 poles		CPFT2/R-4	1SNA094354R2400		60	7.60
				10 poles		CPFT2/R-10	1SNA094360R0600		20	19.00
9	**Terminal block markers**	Blank card			White	RC510	1SNA231000R0700		1	5.20

Complete list of accessories is indicated in the terminal block datasheet.
Some accessories such as jumper bars may modify the terminal block's ratings: complete information in the accessories catalogue pages.

Technical data valid for copper conductors only.

1SNC164003S0201 - Rev. A

MA2.5/5-2CPE pluggable terminal blocks

Feed-through - 5.08 mm 0.200 in spacing

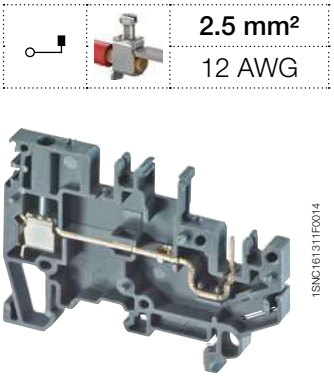

2.5 mm²
12 AWG

1SNC1613111F0014

MA2.5/5-2CPE

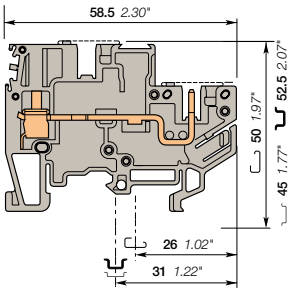

5.08 mm 0.200 in spacing

Description

- Save in flexibility, reliability and simplicity thanks to the pluggable terminal blocks,
- They are particularly well adapted to solve the connecting problems of equipment composed of sub-assemblies (complex machines such as elevators or trains, panel boards with extension boxes...),
- They can then be easily connected through patchcords with CPFT2 plugs connected to the pluggable terminal blocks outputs.

Ordering details

Description		Color	Type	Part Number		Pkg pce	Weight (1 pce) g
Feed-through	1 feed-through circuit for use in combination with disconnect blocks	Grey	MA2.5/5-2CPE1-Pb	1SNA400821R0000		50	7.00

Main technical data

		IEC	UL	CSA
1 conductor per clamp	Rigid: Solid/Stranded	0.2-4 mm²	24-12 AWG	
	Flexible without ferrule	0.22-2.5 mm²		
	Flexible with insulated ferrule			
	Gauge	A3		
Rated current / Rated cross section		12 A / 2.5 mm²	10 A / 12 AWG	
Rated short-time withstand current (1s)		300 A		
Rated voltage		320 V	300 V	
Impulse withstand voltage		4000 V		
Protection		IP20	NEMA 1	

Mounting instructions

Rail	G32, TH 35-7.5, TH 35-15
Wire stripping length	10 mm 0.394 in
Tool	Flat screwdriver Ø 3.5 mm Ø 0.138 in
Torque	0.4 - 0.6 Nm 3.5 - 5.3 lb.in

The connecting capacity data for one Rigid: Solid/Stranded, or one Flexible conductor (when applicable) is a mandatory information required by IEC, UL and CSA standards (Copper conductors). All other data are provided as supplementary information only. For more details, please consult our CB, UL or CSA certificates and technical datasheet available on http://www.TE.com

CE RoHS USR CNR Gost R

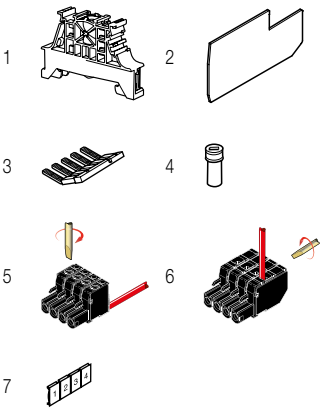

Accessories

	Description				Color	Type	Part Number		Pkg pce	Weight (1 pce) g
1	**End stops**	10 mm	0.394 in		Dark grey	BAM4	1SNK900001R0000		50	14.00
		5.2 mm	0.205 in			BAZ1	1SNK900002R0000		50	5.30
2	**End sections**	2.8 mm	0.110 in		Grey	FE2CPE	1SNA400826R0000		20	2.50
3	**Lateral jumper bars**	2 poles	30 A		Grey	PC5-2	1SNA113542R1000		10	1.80
		10 poles				PC5-10	1SNA113544R1200		10	6.00
4	**Coding pegs**					COCF 32	1SNA173660R1600		10	0.10
						COC 1	1SNA299777R1600		10	
5	**Female plugs wires parallel**	5.08 mm	0.200 in	2 poles	Black	CPFT2/2	1SNA094302R2100		120	3.20
				3 poles		CPFT2/3	1SNA094303R2200		80	4.80
				4 poles		CPFT2/4	1SNA094304R2300		60	6.40
				10 poles		CPFT2/10	1SNA094310R2400		20	16.00
6	**Female plugs wires perpendicular**	5.08 mm	0.200 in	2 poles	Black	CPFT2/R-2	1SNA094352R2200		120	3.80
				3 poles		CPFT2/R-3	1SNA094353R2300		80	5.70
				4 poles		CPFT2/R-4	1SNA094354R2400		60	7.60
				10 poles		CPFT2/R-10	1SNA094360R0600		20	19.00
7	**Terminal block markers**	Blank card			White	RC510	1SNA231000R0700		1	5.20

Complete list of accessories is indicated in the terminal block datasheet.
Some accessories such as jumper bars may modify the terminal block's ratings: complete information in the accessories catalogue pages.

Technical data valid for copper conductors only.

1SNC164004S0201 - Rev. A

MA2.5/5D-2CPE pluggable terminal blocks

Double deck with 2 feed-through circuits - 5.08 mm 0.200 in spacing

2.5 mm²
12 AWG

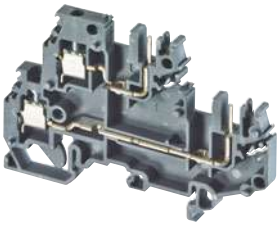

1SNC161302R0014

MA2.5/5D-2CPE

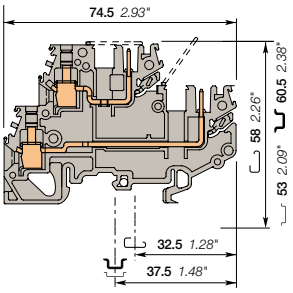

5.08 mm 0.200 in spacing

Description

- Save space with double deck terminal blocks,
- Gain in flexibility, reliability and simplicity thanks to the pluggable terminal blocks,
- Plug & play connection through pre-wired harnesses equipped with CPFT2 plugs.

Ordering details

Description		Color	Type	Part Number		Pkg pce	Weight (1 pce) g
Feed-through	2 feed-through circuits	Grey	MA2.5/5.D2-2CPE	1SNA400813R0000		50	12.00
		Blue	MA2.5/5.D2-2CPE	1SNA125961R1000		50	12.00

Main technical data

		IEC	UL	CSA
1 conductor per clamp	Rigid: Solid/Stranded	0.2-4 mm²	24-12 AWG	
	Flexible without ferrule	0.22-2.5 mm²		
	Flexible with insulated ferrule			
	Gauge	A3		
Rated current / Rated cross section		12 A / 2.5 mm²	10 A / 12 AWG	
Rated short-time withstand current (1s)		300 A		
Rated voltage		320 V	300 V	
Impulse withstand voltage		4000 V		
Protection		IP20	NEMA 1	

Mounting instructions

Rail	G32, TH 35-7.5, TH 35-15
Wire stripping length	10 mm 0.394 in
Tool	Flat screwdriver Ø 3.5 mm Ø 0.138 in
Torque	0.4 - 0.6 Nm 3.5 - 5.3 lb.in

The connecting capacity data for one Rigid: Solid/Stranded, or one Flexible conductor (when applicable) is a mandatory information required by IEC, UL and CSA standards (Copper conductors). All other data are provided as supplementary information only. For more details, please consult our CB, UL or CSA certificates and technical datasheet available on http://www.TE.com

CE | RoHS | USR CNR | Gost R

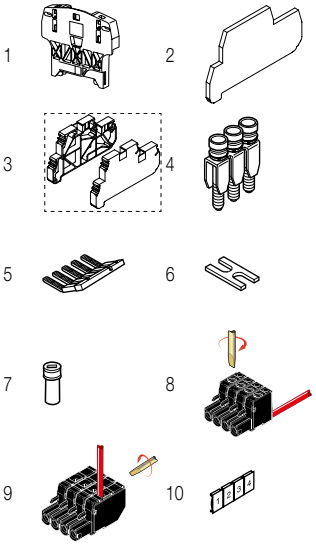

Accessories

	Description				Color	Type	Part Number		Pkg pce	Weight (1 pce) g
1	**End stops**	10 mm	0.394 in		Dark grey	BAZH1	1SNK900102R0000		20	24.00
2	**End sections**	2.54 mm	0.100 in		Grey	FEDCP	1SNA400825R0000		20	3.50
3	**End section-flange kit (R+L)**				Grey	ENS.FEDBCP	1SNA400818R0000		10	11.00
4	**Jumper bars**	2 poles	24 A			BJMI5-2	1SNA176278R1600		10	3.30
		3 poles				BJMI5-3	1SNA176279R1700		10	5.00
		4 poles				BJMI5-4	1SNA176280R0500		10	6.70
		10 poles				BJMI5-10	1SNA176282R2300		10	16.90
5	**Lateral jumper bars**	2 poles	30 A		Grey	PC5-2	1SNA113542R1000		10	1.80
		10 poles				PC5-10	1SNA113544R1200		10	6.00
6	**Cross spacing jumpers**	5 mm 0.200 in - 6 mm 0.236 in - 8 mm 0.315 in				EL6	1SNA173627R2100		10	0.10
7	**Coding pegs**					COCF 32	1SNA173660R1600		10	0.10
						COC 1	1SNA299777R1600		10	
8	**Female plugs wires parallel**	5.08 mm	0.200 in	2 poles	Black	CPFT2/2	1SNA094302R2100		120	3.20
				3 poles		CPFT2/3	1SNA094303R2200		80	4.80
				4 poles		CPFT2/4	1SNA094304R2300		60	6.40
				10 poles		CPFT2/10	1SNA094310R2400		20	16.00
9	**Female plugs wires perpendicular**	5.08 mm	0.200 in	2 poles	Black	CPFT2/R-2	1SNA094352R2200		120	3.80
				3 poles		CPFT2/R-3	1SNA094353R2300		80	5.70
				4 poles		CPFT2/R-4	1SNA094354R2400		60	7.60
				10 poles		CPFT2/R-10	1SNA094360R0600		20	19.00
10	**Terminal block markers**	Blank card			White	RC510	1SNA231000R0700		1	5.20

Complete list of accessories is indicated in the terminal block datasheet.
Some accessories such as jumper bars may modify the terminal block's ratings: complete information in the accessories catalogue pages.

Technical data valid for copper conductors only.

1SNC164005S0201 - Rev. B

MA2.5/5D-2CPE pluggable terminal blocks

Double deck with 1 feed-through circuit - 5.08 mm 0.200 in spacing

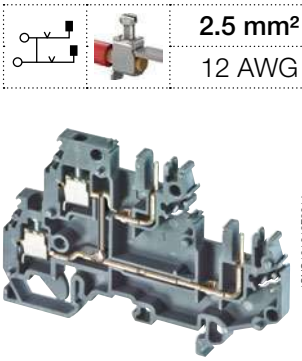

MA2.5/5D-2CPE

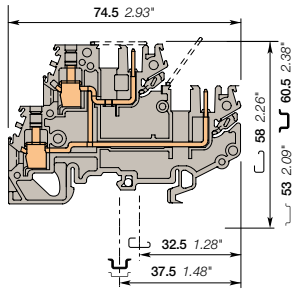

5.08 mm 0.200 in spacing

	2.5 mm²
	12 AWG

Description

- Save space with double deck terminal blocks,
- Gain in flexibility, reliability and simplicity thanks to the pluggable terminal blocks,
- Plug & play connection through pre-wired harnesses equipped with CPFT2 plugs.

Ordering details

Description		Color	Type	Part Number		Pkg pce	Weight (1 pce) g
Feed-through	1 feed-through circuit	Grey	MA2.5/5.D-2CPE	1SNA400823R0000		50	12.00

Main technical data

		IEC	UL	CSA
1 conductor per clamp	Rigid: Solid/Stranded	0.2-4 mm²	24-12 AWG	
	Flexible without ferrule	0.22-2.5 mm²		
	Flexible with insulated ferrule			
	Gauge	A3		
Rated current / Rated cross section		12 A / 2.5 mm²	10 A / 12 AWG	
Rated short-time withstand current (1s)		300 A		
Rated voltage		320 V	300 V	
Impulse withstand voltage		4000 V		
Protection		IP20	NEMA 1	

The connecting capacity data for one Rigid: Solid/Stranded, or one Flexible conductor (when applicable) is a mandatory information required by IEC, UL and CSA standards (Copper conductors). All other data are provided as supplementary information only. For more details, please consult our CB, UL or CSA certificates and technical datasheet available on http://www.TE.com

CE RoHS USR CNR Gost R

Mounting instructions

Rail	G32, TH 35-7.5, TH 35-15
Wire stripping length	10 mm 0.394 in
Tool	Flat screwdriver Ø 3.5 mm Ø 0.138 in
Torque	0.4 - 0.6 Nm 3.5 - 5.3 lb.in

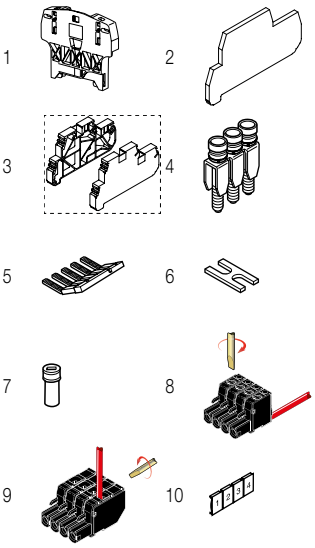

Accessories

	Description				Color	Type	Part Number		Pkg pce	Weight (1 pce) g
1	**End stops**	10 mm	0.394 in		Dark grey	BAZH1	1SNK900102R0000		20	24.00
2	**End sections**	2.54 mm	0.100 in		Grey	FEDCP	1SNA400825R0000		20	3.50
3	**End section-flange kit (R+L)**				Grey	ENS.FEDBCP	1SNA400818R0000		10	11.00
4	**Jumper bars**	2 poles	24 A			BJMI5-2	1SNA176278R1600		10	3.30
		3 poles				BJMI5-3	1SNA176279R1700		10	5.00
		4 poles				BJMI5-4	1SNA176280R0500		10	6.70
		10 poles				BJMI5-10	1SNA176282R2300		10	16.90
5	**Lateral jumper bars**	2 poles			Grey	PC5-2	1SNA113542R1000		10	1.80
		10 poles				PC5-10	1SNA113544R1200		10	6.00
6	**Cross spacing jumpers**	5 mm 0.200 in - 6 mm 0.236 in - 8 mm 0.315 in				EL6	1SNA173627R2100		10	0.10
7	**Coding pegs**					COCF 32	1SNA173660R1600		10	0.10
						COC 1	1SNA299777R1600		10	
8	**Female plugs wires parallel**	5.08 mm	0.200 in	2 poles	Black	CPFT2/2	1SNA094302R2100		120	3.20
				3 poles		CPFT2/3	1SNA094303R2200		80	4.80
				4 poles		CPFT2/4	1SNA094304R2300		60	6.40
				10 poles		CPFT2/10	1SNA094310R2400		20	16.00
9	**Female plugs wires perpendicular**	5.08 mm	0.200 in	2 poles	Black	CPFT2/R-2	1SNA094352R2200		120	3.80
				3 poles		CPFT2/R-3	1SNA094353R2300		80	5.70
				4 poles		CPFT2/R-4	1SNA094354R2400		60	7.60
				10 poles		CPFT2/R-10	1SNA094360R0600		20	19.00
10	**Terminal block markers**	Blank card			White	RC510	1SNA231000R0700		1	5.20

Complete list of accessories is indicated in the terminal block datasheet.
Some accessories such as jumper bars may modify the terminal block's ratings: complete information in the accessories catalogue pages.

Technical data valid for copper conductors only.

1SNC164006S0201 - Rev. B

MA2.5/5-SNB-CPE pluggable terminal blocks

Disconnect with blade - 5.08 mm 0.200 in spacing

2.5 mm²
12 AWG

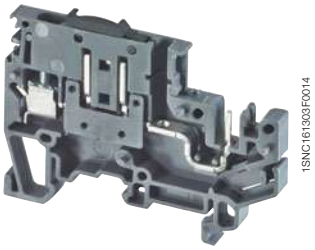

MA2.5/5-SNB-CPE

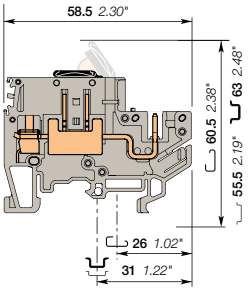

5.08 mm 0.200 in spacing

Description

- Save in flexibility, reliability and simplicity thanks to the pluggable terminal blocks,
- They are particularly well adapted to solve the connecting problems of equipment composed of sub-assemblies (complex machines such as elevators or trains, panel boards with extension boxes...),
- They can then be easily connected through patchcords with CPFT2 plugs connected to the pluggable terminal blocks outputs.

Ordering details

Description		Color	Type	Part Number		Pkg pce	Weight (1 pce) g
Disconnect	1 feed-through circuit	Grey	MA2.5/5-SNB-CPE	1SNA400815R0000		50	7.00

Main technical data

		IEC	UL	CSA
1 conductor per clamp	Rigid: Solid/Stranded	0.2-4 mm²	24-12 AWG	
	Flexible without ferrule	0.22-2.5 mm²		
	Flexible with insulated ferrule			
	Gauge	A3		
Rated current / Rated cross section		10 A / 2.5 mm²	10 A / 12 AWG	
Rated short-time withstand current (1s)		120 A		
Rated voltage		320 V	300 V	
Impulse withstand voltage		4000 V		
Protection		IP20	NEMA 1	

Mounting instructions

Rail	G32, TH 35-7.5, TH 35-15
Wire stripping length	10 mm 0.394 in
Tool	Flat screwdriver Ø 3.5 mm Ø 0.138 in
Torque	0.4 - 0.6 Nm 3.5 - 5.3 lb.in

The connecting capacity data for one Rigid: Solid/Stranded, or one Flexible conductor (when applicable) is a mandatory information required by IEC, UL and CSA standards (Copper conductors). All other data are provided as supplementary information only. For more details, please consult our CB, UL or CSA certificates and technical datasheet available on http://www.TE.com

CE | RoHS | USR CNR | Gost R

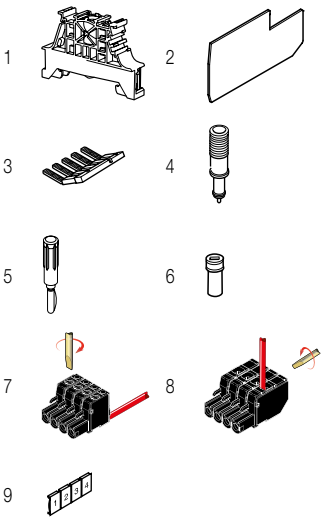

Accessories

	Description				Color	Type	Part Number		Pkg pce	Weight (1 pce) g
1	**End stops**	10 mm	0.394 in		Dark grey	BAM4	1SNK900001R0000		50	14.00
		5.2 mm	0.205 in			BAZ1	1SNK900002R0000		50	5.30
2	**End sections**	2.8 mm	0.110 in		Grey	FE2CPE	1SNA400826R0000		20	2.50
3	**Lateral jumper bars**	2 poles	30 A		Grey	PC5-2	1SNA113542R1000		10	1.80
		10 poles				PC5-10	1SNA113544R1200		10	6.00
4	**Test adapters**				Blue	DCB	1SNA105028R2100		10	20.00
5	**Test plugs**	DIA 2 mm	0.079 in		Black	FC2	1SNA007865R2600		100	
6	**Coding pegs**					COCF 32	1SNA173660R1600		10	0.10
						COC 1	1SNA299777R1600		10	
7	**Female plugs wires parallel**	5.08 mm	0.200 in	2 poles	Black	CPFT2/2	1SNA094302R2100		120	3.20
				3 poles		CPFT2/3	1SNA094303R2200		80	4.80
				4 poles		CPFT2/4	1SNA094304R2300		60	6.40
				10 poles		CPFT2/10	1SNA094310R2400		20	16.00
8	**Female plugs wires perpendicular**	5.08 mm	0.200 in	2 poles	Black	CPFT2/R-2	1SNA094352R2200		120	3.80
				3 poles		CPFT2/R-3	1SNA094353R2300		80	5.70
				4 poles		CPFT2/R-4	1SNA094354R2400		60	7.60
				10 poles		CPFT2/R-10	1SNA094360R0600		20	19.00
9	**Terminal block markers**	Blank card			White	RC510	1SNA231000R0700		1	5.20

Complete list of accessories is indicated in the terminal block datasheet.
Some accessories such as jumper bars may modify the terminal block's ratings: complete information in the accessories catalogue pages.

Technical data valid for copper conductors only.

1SNC164007S0201 - Rev. A

D1.5/7.ADO-CPE pluggable terminal blocks

Feed-through ADO - pluggable - 7.62 mm 0.300 in spacing

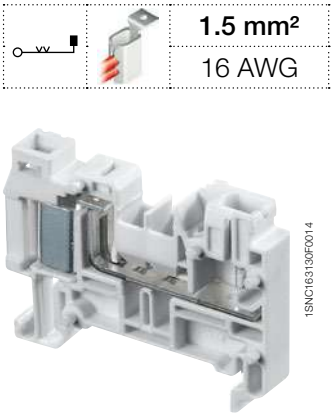

1.5 mm²	
16 AWG	

D1.5/7.ADO-CPE

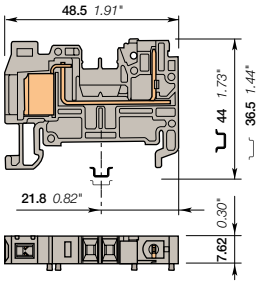

7.62 mm 0.300 in spacing

Description

- Disconnect terminal blocks allow easy opening, maintenance and current or voltage testing without disconnecting the wiring,
- With the TE Connectivity ADO System®, experience the fastest and most reliable connection on the market,
- Designed for control applications exposed to severe constrains (vibrations, shocks, corrosion etc.),
- Up to 2 wires per connection.

Ordering details

Description		Color	Type	Part Number		Pkg pce	Weight (1 pce) g
Feed-through	1 ADO, 1 pluggable	Grey	D1.5/7.ADO-CPE	1SNA290486R2700		50	

Main technical data

		IEC	UL	CSA
ADO	Rigid: Solid/Stranded	0.34-1.5 mm²	22-16 AWG	
	Flexible without ferrule	0.34-2.5 mm²		
Screw clamp	Rigid: Solid/Stranded			
	Flexible without ferrule			
	Flexible with insulated ferrule			
	Gauge			
Rated current / Rated cross section		16 A / 1.5 mm²	15 A / 16 AWG	
Rated short-time withstand current (1s)		180 A		
Rated voltage		500 V	300 V	
Impulse withstand voltage				
Protection		IP20	NEMA 1	

Mounting instructions

Rail		TH 35-7.5, TH 35-15
Wire stripping length		
Tool		
Torque		

The connecting capacity data for one Rigid: Solid/Stranded, or one Flexible conductor (when applicable) is a mandatory information required by IEC, UL and CSA standards (Copper conductors). All other data are provided as supplementary information only. For more details, please consult our CB, UL or CSA certificates and technical datasheet available on http://www.TE.com

RoHS RoHS USR CNR Gost R

Notes

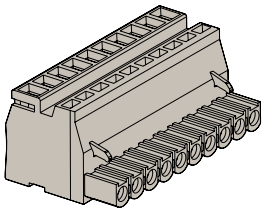

1SSA2662xxR1100

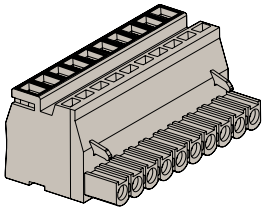

1SSA2672xxR1100

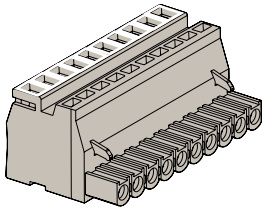

1SSA2762xxR1100

Accessories

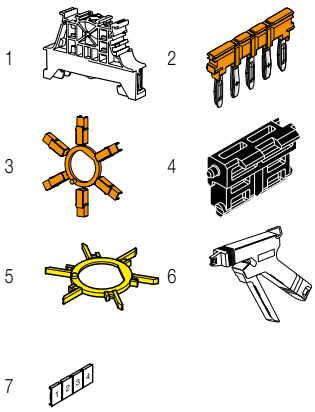

	Description			Color	Type	Part Number		Pkg pce	Weight (1 pce) g
1	**End stops**	10 mm	0.394 in	Dark grey	BAM4	1SNK900001R0000		50	14.00
		5.2 mm	0.205 in		BAZ1	1SNK900002R0000		50	5.30
2	**Jumper bars**	2 poles			BJE762.2	1SNA290451R0300		10	5.30
		5 poles			BJE762.5	1SNA290452R0400		10	15.40
		10 poles			BJE762.10	1SNA290453R0500		10	24.00
3	**Insulating tips**	For jumper bars type BJE762		Orange	EIP	1SNA290454R0600		10	100.00
4	**Locking devices**			Black	VRADO.CPE7	1SNA400063R0000		20	0.40
5	**Coding pegs**			Yellow	COCE	1SNA199321R2100		10	1.00
6	**Tools**	Semi automatic tool			OUPAD	1SNA178944R0400		1	205.00
		Hand tool			OUMAD	1SNA179466R0600		1	29.00
7	**Terminal block markers**	Blank card		White	RB-12W7	1SNA290455R0700		50	6.00

Complete list of accessories is indicated in the terminal block datasheet.
Some accessories such as jumper bars may modify the terminal block's ratings: complete information in the accessories catalogue pages.

Technical data valid for copper conductors only.

1SNC163075S0201 - Rev. A

D2.5/7.ADO-CPE pluggable terminal blocks

Feed-through ADO - pluggable - 7.62 mm 0.300 in spacing

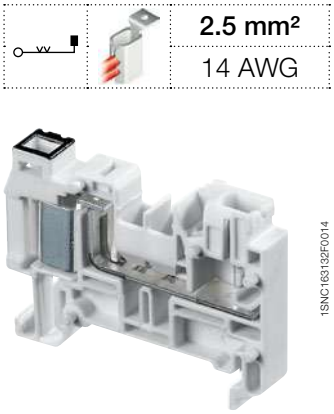

2.5 mm²
14 AWG

1SNC163132F0014

D2.5/7.ADO-CPE

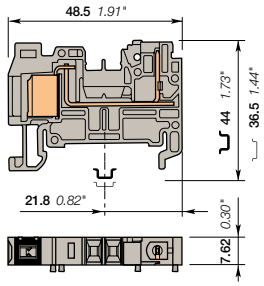

7.62 mm 0.300 in spacing

Description

- Disconnect terminal blocks allow easy opening, maintenance and current or voltage testing without disconnecting the wiring,
- With the TE Connectivity ADO System®, experience the fastest and most reliable connection on the market,
- Designed for control applications exposed to severe constrains (vibrations, shocks, corrosion etc.),
- Up to 2 wires per connection.

Ordering details

Description		Color	Type	Part Number		Pkg pce	Weight (1 pce) g
Feed-through	1 ADO, 1 pluggable with black marking for wire size 1-2.5 mm² (16-14 AWG)	Grey	D2.5/7.ADO-CPE	1SNA290483R2400		50	8.40

Main technical data

		IEC	UL	CSA
ADO	Rigid: Solid/Stranded	1-2.5 mm²	16-14 AWG	
	Flexible without ferrule	1-2.5 mm²		
Screw clamp	Rigid: Solid/Stranded			
	Flexible without ferrule			
	Flexible with insulated ferrule			
	Gauge			
Rated current / Rated cross section		24 A / 2.5 mm²	15 A / 14 AWG	
Rated short-time withstand current (1s)		300 A		
Rated voltage		500 V	300 V	
Impulse withstand voltage				
Protection		IP20	NEMA 1	

Mounting instructions

Rail	TH 35-7.5, TH 35-15
Wire stripping length	
Tool	
Torque	

The connecting capacity data for one Rigid: Solid/Stranded, or one Flexible conductor (when applicable) is a mandatory information required by IEC, UL and CSA standards (Copper conductors). All other data are provided as supplementary information only. For more details, please consult our CB, UL or CSA certificates and technical datasheet available on http://www.TE.com

RoHS RoHS | USR CNR | Gost R

Notes

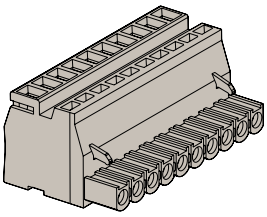

1SSA2662xxR1100

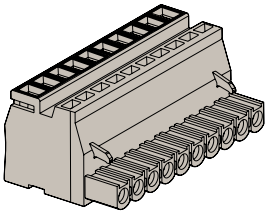

1SSA2672xxR1100

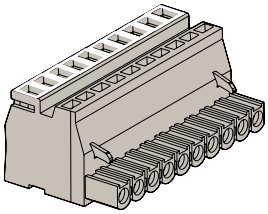

1SSA2762xxR1100

Accessories

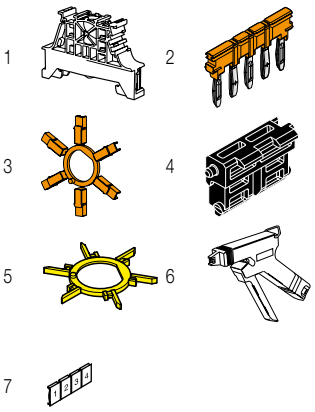

	Description			Color	Type	Part Number		Pkg pce	Weight (1 pce) g
1	**End stops**	10 mm	0.394 in	Dark grey	BAM4	1SNK900001R0000		50	14.00
		5.2 mm	0.205 in		BAZ1	1SNK900002R0000		50	5.30
2	**Jumper bars**	2 poles			BJE762.2	1SNA290451R0300		10	5.30
		5 poles			BJE762.5	1SNA290452R0400		10	15.40
		10 poles			BJE762.10	1SNA290453R0500		10	24.00
3	**Insulating tips**	For jumper bars type BJE762		Orange	EIP	1SNA290454R0600		10	100.00
4	**Locking devices**			Black	VRADO.CPE7	1SNA400063R0000		20	0.40
5	**Coding pegs**			Yellow	COCE	1SNA199321R2100		10	1.00
6	**Tools**	Semi automatic tool			OUPAD	1SNA178944R0400		1	205.00
		Hand tool			OUMAD	1SNA179466R0600		1	29.00
7	**Terminal block markers**	Blank card		White	RB-12W7	1SNA290455R0700		50	6.00

Complete list of accessories is indicated in the terminal block datasheet.
Some accessories such as jumper bars may modify the terminal block's ratings: complete information in the accessories catalogue pages.

Technical data valid for copper conductors only.

1SNC163077S0201 - Rev. A

D1.5/7.2ADO-CPE pluggable terminal blocks

Feed-through ADO - pluggable - 7.62 mm 0.300 in spacing

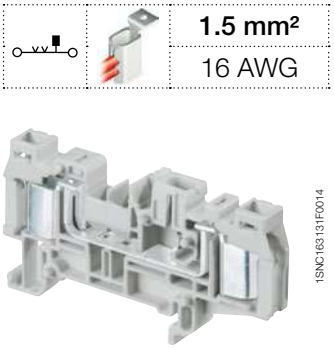

1.5 mm²
16 AWG

1SNC163131F0014

D1.5/7.2ADO-CPE

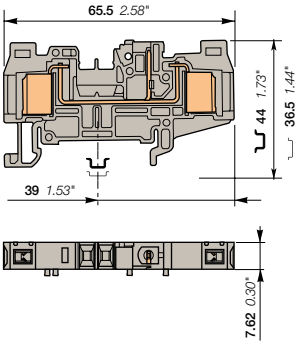

7.62 mm 0.300 in spacing

Description

- Disconnect terminal blocks allow easy opening, maintenance and current or voltage testing without disconnecting the wiring,
- With the TE Connectivity ADO System®, experience the fastest and most reliable connection on the market,
- Designed for control applications exposed to severe constrains (vibrations, shocks, corrosion etc.),
- Up to 2 wires per connection.

Ordering details

Description		Color	Type	Part Number		Pkg pce	Weight (1 pce) g
Feed-through	2 ADO, 1 pluggable	Grey	D1.5/7.2ADO-CPE	1SNA290487R2000		50	

Main technical data

		IEC	UL	CSA
ADO	Rigid: Solid/Stranded	0.34-1.5 mm²	22-16 AWG	
	Flexible without ferrule	0.34-2.5 mm²		
Screw clamp	Rigid: Solid/Stranded			
	Flexible without ferrule			
	Flexible with insulated ferrule			
	Gauge			
Rated current / Rated cross section		16 A / 1.5 mm²	15 A / 16 AWG	
Rated short-time withstand current (1s)		180 A		
Rated voltage		500 V	300 V	
Impulse withstand voltage				
Protection		IP20	NEMA 1	

Mounting instructions

Rail		TH 35-7.5, TH 35-15
Wire stripping length		
Tool		
Torque		

The connecting capacity data for one Rigid: Solid/Stranded, or one Flexible conductor (when applicable) is a mandatory information required by IEC, UL and CSA standards (Copper conductors). All other data are provided as supplementary information only. For more details, please consult our CB, UL or CSA certificates and technical datasheet available on http://www.TE.com

RoHS RoHS · USR CNR · Gost R

Notes

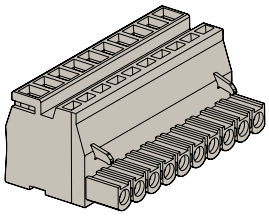

1SSA2662xxR1100

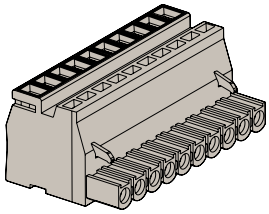

1SSA2672xxR1100

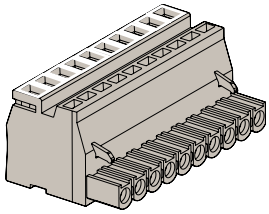

1SSA2762xxR1100

Accessories

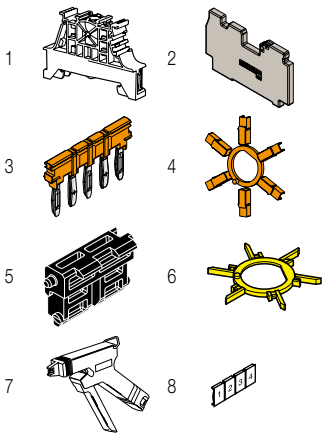

	Description			Color	Type	Part Number		Pkg pce	Weight (1 pce) g
1	**End stops**	10 mm	0.394 in	Dark grey	BAM4	1SNK900001R0000		50	14.00
		5.2 mm	0.205 in		BAZ1	1SNK900002R0000		50	5.30
2	**End sections**	2.9 mm	0.114 in	Grey	FECPE.2ADO	1SNA291833R1700		20	2.50
3	**Jumper bars**	2 poles			BJE762.2	1SNA290451R0300		10	5.30
		5 poles			BJE762.5	1SNA290452R0400		10	15.40
		10 poles			BJE762.10	1SNA290453R0500		10	24.00
4	**Insulating tips**	For jumper bars type BJE762		Orange	EIP	1SNA290454R0600		10	100.00
5	**Locking devices**			Black	VRADO.CPE7	1SNA400063R0000		20	0.40
6	**Coding pegs**			Yellow	COCE	1SNA199321R2100		10	1.00
7	**Tools**	Semi automatic tool			OUPAD	1SNA178944R0400		1	205.00
		Hand tool			OUMAD	1SNA179466R0600		1	29.00
8	**Terminal block markers**	Blank card		White	RB-12W7	1SNA290455R0700		50	6.00

Complete list of accessories is indicated in the terminal block datasheet.
Some accessories such as jumper bars may modify the terminal block's ratings: complete information in the accessories catalogue pages.

Technical data valid for copper conductors only.

1SNC163076S0201 - Rev. A

D2.5/7.2ADO-CPE pluggable terminal blocks

Feed-through ADO - pluggable - 7.62 mm 0.300 in spacing

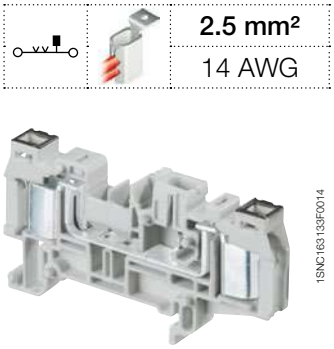

2.5 mm²
14 AWG

1SNC163133F0014

D2.5/7.2ADO-CPE

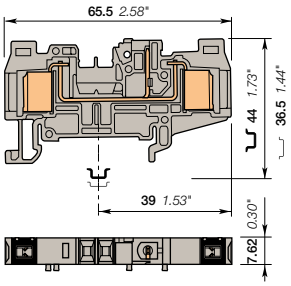

7.62 mm 0.300 in spacing

Description

- Disconnect terminal blocks allow easy opening, maintenance and current or voltage testing without disconnecting the wiring,
- With the TE Connectivity ADO System®, experience the fastest and most reliable connection on the market,
- Designed for control applications exposed to severe constrains (vibrations, shocks, corrosion etc.),
- Up to 2 wires per connection.

Ordering details

Description		Color	Type	Part Number		Pkg pce	Weight (1 pce) g
Feed-through	2 ADO, 1 pluggable with black marking for wire size 1-2.5 mm² (16-14 AWG)	Grey	D2.5/7.2ADO-CPE	1SNA290484R2500		50	11.00

Main technical data

		IEC	UL	CSA
ADO	Rigid: Solid/Stranded	1-2.5 mm²	16-14 AWG	
	Flexible without ferrule	1-2.5 mm²		
Screw clamp	Rigid: Solid/Stranded			
	Flexible without ferrule			
	Flexible with insulated ferrule			
	Gauge			
Rated current / Rated cross section		24 A / 2.5 mm²	15 A / 14 AWG	
Rated short-time withstand current (1s)		300 A		
Rated voltage		500 V	300 V	
Impulse withstand voltage				
Protection		IP20	NEMA 1	

Mounting instructions

Rail	TH 35-7.5, TH 35-15
Wire stripping length	
Tool	
Torque	

The connecting capacity data for one Rigid: Solid/Stranded, or one Flexible conductor (when applicable) is a mandatory information required by IEC, UL and CSA standards (Copper conductors). All other data are provided as supplementary information only. For more details, please consult our CB, UL or CSA certificates and technical datasheet available on http://www.TE.com

RoHS / RoHS — USR CNR — Gost R

Notes

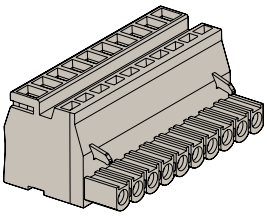

1SSA2662xxR1100

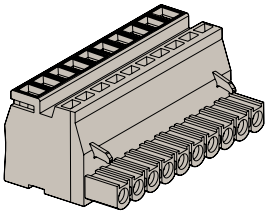

1SSA2672xxR1100

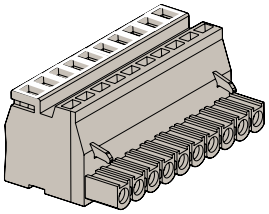

1SSA2762xxR1100

Accessories

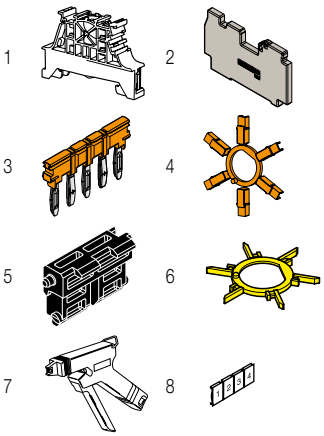

	Description			Color	Type	Part Number		Pkg pce	Weight (1 pce) g
1	**End stops**	10 mm	0.394 in	Dark grey	BAM4	1SNK900001R0000		50	14.00
		5.2 mm	0.205 in		BAZ1	1SNK900002R0000		50	5.30
2	**End sections**	2.9 mm	0.114 in	Grey	FECPE.2ADO	1SNA291833R1700		20	2.50
3	**Jumper bars**	2 poles			BJE762.2	1SNA290451R0300		10	5.30
		5 poles			BJE762.5	1SNA290452R0400		10	15.40
		10 poles			BJE762.10	1SNA290453R0500		10	24.00
4	**Insulating tips**	For jumper bars type BJE762		Orange	EIP	1SNA290454R0600		10	100.00
5	**Locking devices**			Black	VRADO.CPE7	1SNA400063R0000		20	0.40
6	**Coding pegs**			Yellow	COCE	1SNA199321R2100		10	1.00
7	**Tools**	Semi automatic tool			OUPAD	1SNA178944R0400		1	205.00
		Hand tool			OUMAD	1SNA179466R0600		1	29.00
8	**Terminal block markers**	Blank card		White	RB-12W7	1SNA290455R0700		50	6.00

Complete list of accessories is indicated in the terminal block datasheet.
Some accessories such as jumper bars may modify the terminal block's ratings: complete information in the accessories catalogue pages.

Technical data valid for copper conductors only.

1SNC163078S0201 - Rev. A

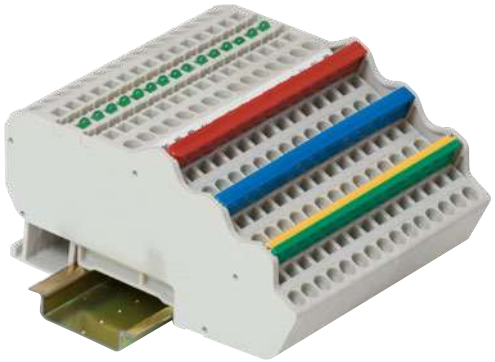

1SNC160101S0201

Dedicated applications terminal blocks
Sensors / Actuators

Technologies presentation			190
Overview			191
Screw clamp technology			
2 wire sensor			
2.5 mm² / 12 AWG	**D2.5/6.DP**		192
3 wire sensor			
2.5 mm² / 12 AWG	**D2.5/6.DA**		193
	D2.5/6.D		194
	D2.5/6.DL	With red led	195
	D2.5/6.DAL	With green led	196
Thermocouple			
	MTC6		197
Spring clamp technology			
3 wire sensor			
1.5 mm² / 16 AWG	**D2.5/5.C3.L**		198
	D2.5/5.C3.L.L	With green led	199
4 wire sensor			
1.5 mm² / 16 AWG	**D2.5/5.C4.L**		200
	D2.5/5.C4.L.L	With green led	201
ADO-ADO technology			
3 wire sensor			
1 mm² / 20 AWG	**D1/5.C3.ADO**		202
	D1/5.C3.ADO.L	With green led	203
4 wire sensor			
1 mm² / 20 AWG	**D1/5.C4.ADO**		204
	D1/5.C4.ADO.L	With green led	205

1SNC160101S0201

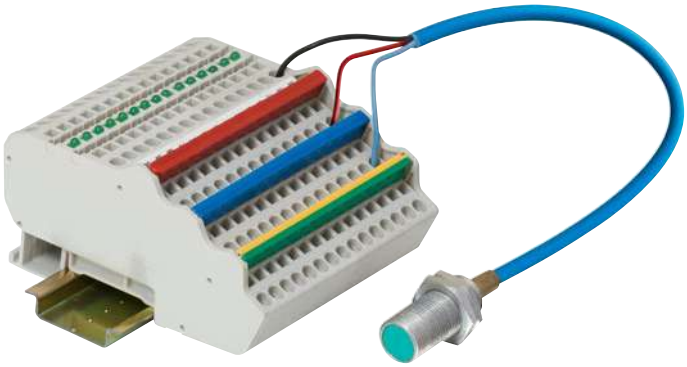

The smart choice for process automation applications

Process automation applications typically require the use of a large number of digital or analog signals and sensors.
The space constraint is often an issue in regards to this large volume of signals to handle.
TE Connectivity sensor and actuator terminal blocks reduce the installation costs, speed the wiring and ease commissioning thanks to:

- Compact multi deck terminals blocks for 3 & 4 wire sensors
- Potentials distribution via jumper (positive, negative, ground)
- Signal indication via LED for circuit status indication.

Select from our large choice of solutions and technologies

Classic and compact screw clamp terminal blocks

The product family features very compact dimensions.
It is the preferred choice for small junction boxes when panel height is a constraints. Our terminals are compatible with:

- 2 wire and 3 wire sensors
- PNP & NPN sensors.

Convenient and ergonomic spring clamp terminal blocks

The product family features popular spring technology particularly appreciated in process industry.
Our product family offers:

- Compatibility with 2, 3 and 4 wire sensors
- Compatibility with NPN and PNP sensors thanks to bidirectional LED indicators
- Color coded 34 poles plug-in jumpers adapted to popular PLC I/O cards configurations (8, 16, 32 channels).

ADO System® terminal blocks: experience the fastest and most reliable connection on the market

Our exclusive ADO System® combines speed on connection with top reliability of connection. Our product family offers:

- Compatibility with 2, 3 and 4 wire sensors
- Compatibility with NPN and PNP sensors thanks to bidirectional LED indicators
- Color coded 66 poles plug-in jumpers adapted to all PLC I/O cards configurations (8,16, 32 & 64 channels).

Universal thermocouple terminal block

This terminal block allows connection of all types of temperature thermocouple sensors. Its exclusive design allows thermocouple wire extention with no loss of signal integrity.
Learn more in the related page of our catalog.

Screw clamp terminal block

Spring terminal block

ADO System® terminal block

Thermocouple terminal block

1SNC161167S0201

Screw clamp technology

		2 wire sensor	3 wire sensor				Thermocouple
Section							
IEC	UL/CSA						
2.5 mm²	12 AWG	D2.5/6.DP 6 mm 0.236 in	D2.5/6.DA 6 mm 0.236 in	D2.5/6.D 6 mm 0.236 in	D2.5/6.DL 6 mm 0.236 in	D2.5/6.DAL 6 mm 0.236 in	MTC6 6 mm 0.236 in

Spring clamp technology

		3 wire sensor		4 wire sensor	
Section					
IEC	UL/CSA				
1.5 mm²	16 AWG	D2.5/5.C3.L 5 mm 0.197 in	D2.5/5.C3.L.L 5 mm 0.197 in	D2.5/5.C4.L 5 mm 0.197 in	D2.5/5.C4.L.L 5 mm 0.197 in

ADO - ADO technology

		3 wire sensor		4 wire sensor	
Section					
IEC	UL/CSA				
1 mm²	20 AWG	D1/5.C3.ADO 5 mm 0.197 in	D1/5.C3.ADO.L 5 mm 0.197 in	D1/5.C4.ADO 5 mm 0.197 in	D1/5.C4.ADO.L 5 mm 0.197 in

1SNC160063S0201

D2.5/6.DP screw clamp terminal blocks
Double deck + ground - 6 mm 0.236 in spacing

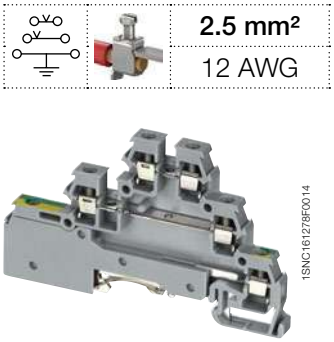

D2.5/6.DP

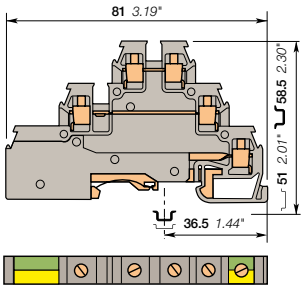

6 mm 0.236 in spacing

	2.5 mm²
	12 AWG

Description

- Save space with triple deck terminal blocks: 2 independent circuits in just 6 mm 0.236 in spacing,
- Adapted for 2 wires sensor/actuator with ground.

Ordering details

Description		Color	Type	Part Number		Pkg qty	Weight (1 pce) g
Feed-through + ground	For 2 wires sensor with ground - 2 feed-through circuits - 1 ground circuit	Grey, Green-Yellow	D2.5/6.DPA1	1SNA115643R2700		25	16.00

Main technical data

Connecting capacity		IEC	UL	CSA
1 conductor per clamp	Rigid: Solid/Stranded	0.2-2.5 mm²	20-12 AWG	22-14 AWG
	Flexible without ferrule	0.22-2.5 mm²		
	Flexible with insulated ferrule			
	Gauge	A2		
Rated current / Rated cross section		22 A / 2.5 mm²	26 A / 12 AWG	20 A / 14 AWG
Rated short-time withstand current (1s)		300 A		
Rated voltage		380 V	300 V	300 V
Impulse withstand voltage				
Protection		IP20	NEMA 1	

Mounting instructions

Rail	G32, TH 35-7.5, TH 35-15
Wire stripping length	6 mm 0.24 in
Tool	Flat screwdriver Ø 3.5 mm Ø 0.138 in
Torque	0.4 - 0.6 N.m 3.5 - 5.3 lb.in

The connecting capacity data for one Rigid: Solid/Stranded, or one Flexible conductor (when applicable) is a mandatory information required by IEC, UL and CSA standards (Copper conductors). All other data are provided as supplementary information only. For more details, please consult our CB, UL or CSA certificates and technical datasheet available on http://www.TE.com

CE RoHS USR CSA Gost R

Accessories

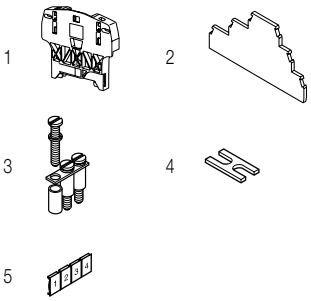

	Description			Color	Type	Part Number		Pkg qty	Weight (1 pce) g
1	**End stops**	10 mm	0.394 in	Dark grey	BAZH1	1SNK900102R0000		20	24.00
2	**End sections**	3 mm	0.118 in	Grey	FED3E	1SNA116771R2000		20	3.80
3	**Jumper bars**	2 poles	22 A		BJD6	1SNA178024R2500		10	1.00
		3 poles				1SNA178025R2600		10	2.00
		4 poles				1SNA178026R2700		10	2.00
		5 poles				1SNA178027R2000		10	3.00
		10 poles				1SNA178032R2500		10	6.00
		20 poles				1SNA178033R2600		5	12.00
4	**Cross spacing jumpers**	5 mm 0.200 in - 6 mm 0.236 in - 8 mm 0.315 in			EL61	1SNA177812R1700		10	0.10
5	**Terminal block markers**	Blank card		White	RC65	1SNA232000R0000		1	3.60

Complete list of accessories is indicated in the terminal block datasheet.
Some accessories such as jumper bars may modify the terminal block's ratings: complete information in the accessories catalogue pages.

Technical data valid for copper conductors only.

D2.5/6.DA screw clamp terminal blocks
Triple deck - 6 mm 0.236 in spacing

2.5 mm²
12 AWG

D2.5/6.DA

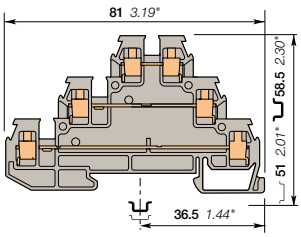

6 mm 0.236 in spacing

Description

- Save space with triple deck terminal blocks: 3 independent circuits connected in just 6 mm 0.236 in spacing,
- Adapted for 3 wires sensor/actuator.

Ordering details

Description		Color	Type	Part Number		Pkg qty	Weight (1 pce) g
Feed-through	For 3 wires sensor - 3 feed-through circuits	Grey	D2.5/6.DA	1SNA115541R1100		25	13.00

Main technical data

Connecting capacity		IEC	UL	CSA
1 conductor per clamp	Rigid: Solid/Stranded	0.2-2.5 mm²	20-12 AWG	22-14 AWG
	Flexible without ferrule	0.22-2.5 mm²		
	Flexible with insulated ferrule			
	Gauge	A2		
Rated current / Rated cross section		22 A / 2.5 mm²	26 A / 12 AWG	20 A / 14 AWG
Rated short-time withstand current (1s)		300 A		
Rated voltage		380 V	300 V	300 V
Impulse withstand voltage				
Protection		IP20	NEMA 1	

Mounting instructions

Rail	G32, TH 35-7.5, TH 35-15
Wire stripping length	6 mm 0.24 in
Tool	Flat screwdriver Ø 3.5 mm Ø 0.138 in
Torque	0.4 - 0.6 N.m 3.5 - 5.3 lb.in

The connecting capacity data for one Rigid: Solid/Stranded, or one Flexible conductor (when applicable) is a mandatory information required by IEC, UL and CSA standards (Copper conductors). All other data are provided as supplementary information only. for more details, please consult our CB, UL or CSA certificates and technical datasheet available on http://www.TE.com

CE | RoHS | USR | CSA | Gost R

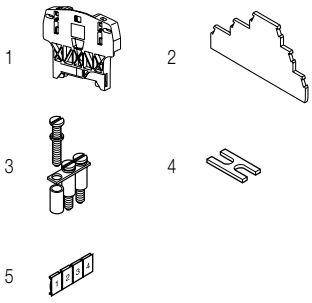

Accessories

	Description			Color	Type	Part Number		Pkg qty	Weight (1 pce) g
1	**End stops**	10 mm	0.394 in	Dark grey	BAZH1	1SNK900102R0000		20	24.00
2	**End sections**	3 mm	0.118 in	Grey	FED3E	1SNA116771R2000		20	3.80
3	**Jumper bars**	2 poles	22 A		BJD6	1SNA178024R2500		10	1.00
		3 poles				1SNA178025R2600		10	2.00
		4 poles				1SNA178026R2700		10	2.00
		5 poles				1SNA178027R2000		10	3.00
		10 poles				1SNA178032R2500		10	6.00
		20 poles				1SNA178033R2600		5	12.00
4	**Cross spacing jumpers**	5 mm 0.200 in - 6 mm 0.236 in - 8 mm 0.315 in			EL61	1SNA177812R1700		10	0.10
5	**Terminal block markers**	Blank card		White	RC65	1SNA232000R0000		1	3.60

Complete list of accessories is indicated in the terminal block datasheet.
Some accessories such as jumper bars may modify the terminal block's ratings: complete information in the accessories catalogue pages.

Technical data valid for copper conductors only.

1SNC161084S0201 - Rev. B

D2.5/6.D screw clamp terminal blocks

Sensors / Actuators - 6 mm 0.236 in spacing

2.5 mm²
12 AWG

D2.5/6.D

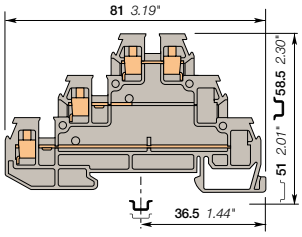

6 mm 0.236 in spacing

Description

Save space with triple deck terminal blocks: adapted for 3 wires sensor/actuator in just 6 mm 0.236 in spacing.

Ordering details

Description		Color	Type	Part Number		Pkg pce	Weight (1 pce) g
Sensor	For 3 wire sensor with a jumper channel on each deck	Grey	D2.5/6.D	1SNA115542R1200		25	10.00

Main technical data

		IEC	UL	CSA
1 conductor per clamp	Rigid: Solid/Stranded	0.2-2.5 mm²	20-12 AWG	22-14 AWG
	Flexible without ferrule	0.22-2.5 mm²		
	Flexible with insulated ferrule			
	Gauge	A2		
Rated current / Rated cross section		22 A / 2.5 mm²	26 A / 12 AWG	20 A / 14 AWG
Rated short-time withstand current (1s)		300 A		
Rated voltage		380 V	300 V	300 V
Impulse withstand voltage				
Protection		IP20	NEMA 1	

Mounting instructions

Rail	G32, TH 35-7.5, TH 35-15
Wire stripping length	6 mm 0.24 in
Tool	Flat screwdriver Ø 3.5 mm Ø 0.138 in
Torque	0.4 - 0.6 Nm 3.5 - 5.3 lb.in

The connecting capacity data for one Rigid: Solid/Stranded, or one Flexible conductor (when applicable) is a mandatory information required by IEC, UL and CSA standards (Copper conductors). All other data are provided as supplementary information only. For more details, please consult our CB, UL or CSA certificates and technical datasheet available on http://www.TE.com

CE RoHS USR CSA Gost R

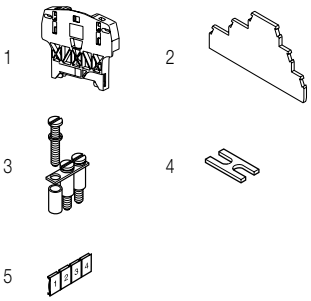

Accessories

	Description			Color	Type	Part Number		Pkg pce	Weight (1 pce) g
1	**End stops**	10 mm	0.394 in	Dark grey	BAZH1	1SNK900102R0000		20	24.00
2	**End sections**	3 mm	0.118 in	Grey	FED3E	1SNA116771R2000		20	3.80
3	**Jumper bars**	2 poles	22 A		BJD6	1SNA178024R2500		10	1.00
		3 poles				1SNA178025R2600		10	2.00
		4 poles				1SNA178026R2700		10	2.00
		5 poles				1SNA178027R2000		10	3.00
		10 poles				1SNA178032R2500		10	6.00
		20 poles				1SNA178033R2600		5	12.00
4	**Cross spacing jumpers**	5 mm 0.200 in - 6 mm 0.236 in - 8 mm 0.315 in			EL61	1SNA177812R1700		10	0.10
5	**Terminal block markers**	Blank card		White	RC65	1SNA232000R0000		1	3.60

Complete list of accessories is indicated in the terminal block datasheet.
Some accessories such as jumper bars may modify the terminal block's ratings: complete information in the accessories catalogue pages.

Technical data valid for copper conductors only.

1SNC161148S0201 - Rev. A

D2.5/6.D screw clamp terminal blocks

Sensors / Actuators - 6 mm 0.236 in spacing

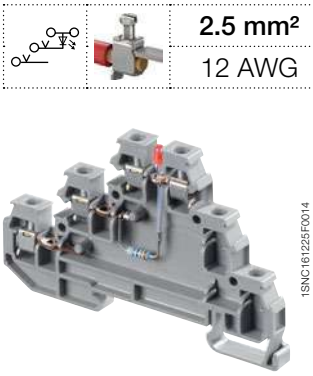

D2.5/6.D

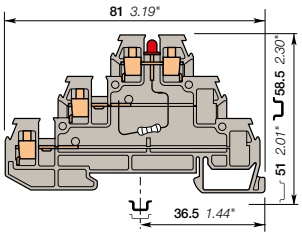

6 mm 0.236 in spacing

2.5 mm²
12 AWG

Description

- Save space with triple deck terminal blocks: adapted for 3 wires sensor/actuator in just 6 mm 0.236 in spacing,
- Quickly identify the signal circuit status thanks to the indicator.

Ordering details

Description		Color	Type	Part Number		Pkg pce	Weight (1 pce) g
Sensor	For 3 wire sensor PNP with red 24 V DC LED and a jumper bar channel on middle and lower deck	Grey	D2.5/6.DL	1SNA115537R0500		25	10.00

Main technical data

		IEC	UL	CSA
1 conductor per clamp	Rigid: Solid/Stranded	0.2-2.5 mm²	20-12 AWG	22-14 AWG
	Flexible without ferrule	0.22-2.5 mm²		
	Flexible with insulated ferrule			
	Gauge	A2		
Rated current / Rated cross section		22 A / 2.5 mm²	26 A / 12 AWG	20 A / 14 AWG
Rated short-time withstand current (1s)		300 A		
Rated voltage		380 V	300 V	300 V
Impulse withstand voltage				
Protection		IP20	NEMA 1	

Mounting instructions

Rail		G32, TH 35-7.5, TH 35-15
Wire stripping length		6 mm 0.24 in
Tool		Flat screwdriver Ø 3.5 mm Ø 0.138 in
Torque		0.4 - 0.6 Nm 3.5 - 5.3 lb.in

The connecting capacity data for one Rigid: Solid/Stranded, or one Flexible conductor (when applicable) is a mandatory information required by IEC, UL and CSA standards (Copper conductors). All other data are provided as supplementary information only. For more details, please consult our CB, UL or CSA certificates and technical datasheet available on http://www.TE.com

CE RoHS USR CSA Gost R

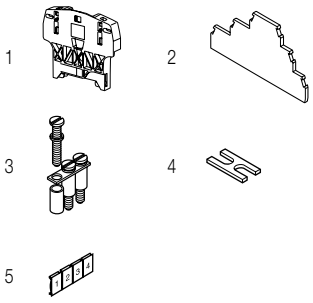

Accessories

	Description			Color	Type	Part Number		Pkg pce	Weight (1 pce) g
1	**End stops**	10 mm	0.394 in	Dark grey	BAZH1	1SNK900102R0000		20	24.00
2	**End sections**	3 mm	0.118 in	Grey	FED3E	1SNA116771R2000		20	3.80
3	**Jumper bars**	2 poles	22 A		BJD6	1SNA178024R2500		10	1.00
		3 poles				1SNA178025R2600		10	2.00
		4 poles				1SNA178026R2700		10	2.00
		5 poles				1SNA178027R2000		10	3.00
		10 poles				1SNA178032R2500		10	6.00
		20 poles				1SNA178033R2600		5	12.00
4	**Cross spacing jumpers**	5 mm 0.200 in - 6 mm 0.236 in - 8 mm 0.315 in			EL61	1SNA177812R1700		10	0.10
5	**Terminal block markers**	Blank card		White	RC65	1SNA232000R0000		1	3.60

Complete list of accessories is indicated in the terminal block datasheet.
Some accessories such as jumper bars may modify the terminal block's ratings: complete information in the accessories catalogue pages.

Technical data valid for copper conductors only.

1SNC161146S0201 - Rev. A

D2.5/6.DAL screw clamp terminal blocks

Sensors / Actuators - 6 mm 0.236 in spacing

2.5 mm²
12 AWG

D2.5/6.DAL

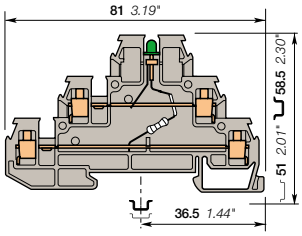

6 mm 0.236 in spacing

Description

- Save space with triple deck terminal blocks: 2 independent circuits connected in just 6 mm 0.236 in spacing,
- Adapted for 3 wires sensor/actuator,
- Quickly identify the signal circuit status thanks to the indicator.

Ordering details

Description		Color	Type	Part Number		Pkg pce	Weight (1 pce) g
Sensor	Power block with green LED 24 V DC for 3 wires sensor and a jumper bar	Grey	D2.5/6.DAL2	1SNA115547R1700		25	12.00

Main technical data

		IEC	UL	CSA
1 conductor per clamp	Rigid: Solid/Stranded	0.2-2.5 mm²	20-12 AWG	22-14 AWG
	Flexible without ferrule	0.22-2.5 mm²		
	Flexible with insulated ferrule			
	Gauge	A2		
Rated current / Rated cross section		22 A / 2.5 mm²	26 A / 12 AWG	20 A / 14 AWG
Rated short-time withstand current (1s)		300 A		
Rated voltage		380 V	300 V	300 V
Impulse withstand voltage				
Protection		IP20	NEMA 1	

The connecting capacity data for one Rigid: Solid/Stranded, or one Flexible conductor (when applicable) is a mandatory information required by IEC, UL and CSA standards (Copper conductors). All other data are provided as supplementary information only. For more details, please consult our CB, UL or CSA certificates and technical datasheet available on http://www.TE.com

CE RoHS USR CSA Gost R

Mounting instructions

Rail	G32, TH 35-7.5, TH 35-15
Wire stripping length	6 mm 0.24 in
Tool	Flat screwdriver Ø 3.5 mm Ø 0.138 in
Torque	0.4 - 0.6 Nm 3.5 - 5.3 lb.in

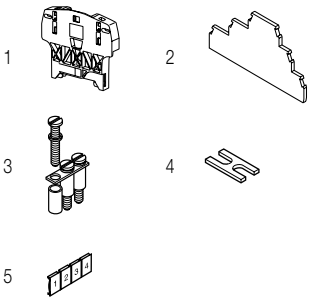

Accessories

	Description			Color	Type	Part Number		Pkg pce	Weight (1 pce) g
1	**End stops**	10 mm	0.394 in	Dark grey	BAZH1	1SNK900102R0000		20	24.00
2	**End sections**	3 mm	0.118 in	Grey	FED3E	1SNA116771R2000		20	3.80
3	**Jumper bars**	2 poles	22 A		BJD6	1SNA178024R2500		10	1.00
		3 poles				1SNA178025R2600		10	2.00
		4 poles				1SNA178026R2700		10	2.00
		5 poles				1SNA178027R2000		10	3.00
		10 poles				1SNA178032R2500		10	6.00
		20 poles				1SNA178033R2600		5	12.00
4	**Cross spacing jumpers**	5 mm 0.200 in - 6 mm 0.236 in - 8 mm 0.315 in			EL61	1SNA177812R1700		10	0.10
5	**Terminal block markers**	Blank card		White	RC65	1SNA232000R0000		1	3.60

Complete list of accessories is indicated in the terminal block datasheet.
Some accessories such as jumper bars may modify the terminal block's ratings: complete information in the accessories catalogue pages.

Technical data valid for copper conductors only.

1SNC161149S0201 - Rev. A

MTC6 thermocouple terminal blocks
Screw clamp - 6 mm 0.236 in spacing

MTC6

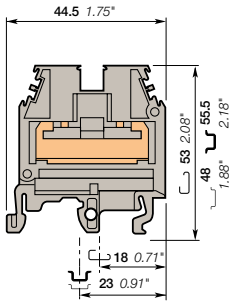

6 mm *0.236* in spacing

Description

- Universal terminal block adapted to all type of thermocouples,
- Allow thermocouple wire extention with no loss of signal integrity,
- Compatible with solid type thermocouple wires,
- Reduced inventory: only one part number needed for all configurations.

Ordering details

Description	Color	Type	Part Number	Pkg pce	Weight (1 pce) g
Feed-through	Grey	MTC6	1SNA115206R2200	50	20
		MTC6.Ex	1SNA146227R2500	50	20

Main technical data

	NFC	DIN
Wire size	2 rigid thermocouple conductors 0.9 to 1.5	
Rated voltage	500 V	
Rated voltage Ex e (MTC6.Ex)	550 V IEC/EN 60079-7 - IM2/M1 II 2 GD/1 GD Ex e I/II	

Mounting instructions

Rail	G32, TH 35-7.5, TH 35-15
Wire stripping length	31 mm 1.22 in
Torque	0.4 - 0.6 N.m 3.5 - 5.3 lb.in

The connecting capacity data for one Rigid: Solid/Stranded, or one Flexible conductor (when applicable) is a mandatory information required by IEC, UL and CSA standards (Copper conductors). All other data are provided as supplementary information only. For more details, please consult our CB, UL or CSA certificates and technical datasheet available on http://www.TE.com

RoHS RoHS Gost R

Notes

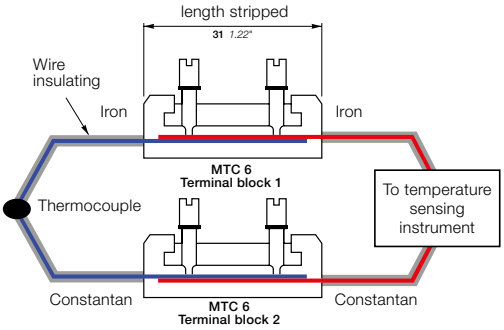

Figure 1: MTC6 with shield connector

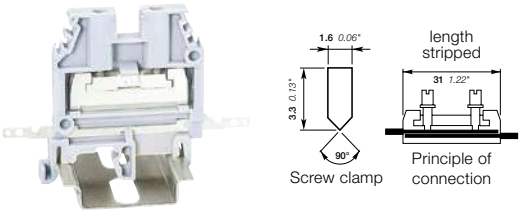

Figure 2

Universal terminal block

Other thermocouple terminal blocks are available with hardware (screws, clamps and connecting bar) which match the thermocouple material being used. This requires inventory of many different terminal block types.

MTC6 terminal block adapts to all thermocouple material. This "neutral" method of connection limits the introduction of foreign materials to an insignificant level. The thermocouple wire insulation is stripped (31 mm maximum) and the bar wires are superimposed on each another. The thermocouple wires are in contact over their complete 31 mm length and tightened at two points by round tip screws (see figure 1). The screws, made of plated brass, have only a mechanical function, that of holding the wires together with a point contact. Thus, the pressure points are not relevant in the connection environment. One thermocouple lead connects through one terminal block (see figure 1). The MTC6 requires only 6 mm of space, allowing 50 terminals per foot of rail.

Thermocouple shield wire connector bar

The MTC6 can be field or factory equipped with a shield connector bar (see figure 2). This bar, made of treated brass, fits in the lower part of the terminal block. It ensures the continuity of the thermocouple wire shield through the terminal block or to the ground with no additional spacing.

Accessories

1

2 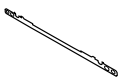

	Description			Color	Type	Part Number	Pkg pce	Weight (1 pce) g
1	End sections	2.8 mm	0.110 in	Grey	FEM6	1SNA118368R1600	20	2.40
2	Shield connectors				CBM5	1SNA178745R1400	50	

Complete list of accessories is indicated in the terminal block datasheet.
Some accessories such as jumper bars may modify the terminal block's ratings: complete information in the accessories catalogue pages.

Technical data valid for copper conductors only.

1SNC161121S0201 - Rev. B

D2.5/5.C3.L spring terminal blocks

Sensors / Actuators - 5 mm 0.197 in spacing

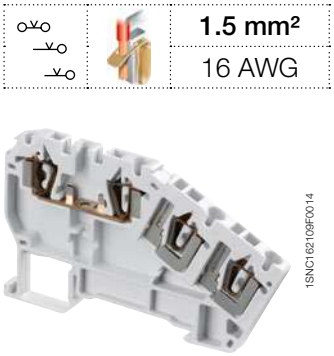

1SNC162109F0014

D2.5/5.C3.L

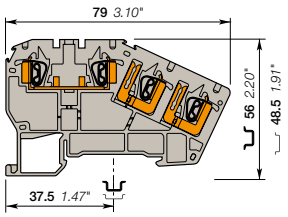

5 mm 0.197 in spacing

	1.5 mm²
	16 AWG

Description

- Save spacing with 3 decks terminal block, adapted for sensor/actuator in just 5 mm 0.197 in spacing,
- Easy to access thanks to the front wiring entry,
- Clamping contact pressure non dependent on the operator and automatic creeping compensation.

Ordering details

Description		Color	Type	Part Number		Pkg pce	Weight (1 pce) g
Sensor	3 wires	Grey	D2.5/5.C3.L	1SNA290350R2100		50	11.00

Main technical data

		IEC	UL	CSA
1 conductor per clamp	Rigid: Solid/Stranded	0.14-1.5 mm²		24-16 AWG
	Flexible without ferrule	0.14-1.5 mm²		
	Flexible with non insulated ferrule			
	Flexible with insulated ferrule	0.5-1 mm²		
	Gauge	A1		
Rated current / Rated cross section		17.5 A / 1.5 mm²		10 A / 16 AWG
Rated short-time withstand current (1s)		180 A		
Rated voltage		300 V		300 V
Impulse withstand voltage		4000 V		
Protection		IP20	NEMA 1	

The connecting capacity data for one Rigid: Solid/Stranded, or one Flexible conductor (when applicable) is a mandatory information required by IEC, UL and CSA standards (Copper conductors). All other data are provided as supplementary information only. For more details, please consult our CB, UL or CSA certificates and technical datasheet available on http://www.TE.com

RoHS CSA Gost R

Mounting instructions

Rail	TH 35-7.5, TH 35-15
Wire stripping length	9.5 mm 0.37 in
Tool	Flat screwdriver Ø 3.5 mm Ø 0.138 in

Notes

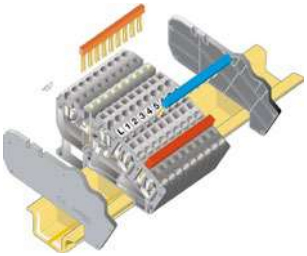

To obtain finger safety (IP20) of a terminal block assembly with comb type jumper bar, it is necessary to put one end section on each side of the terminal block assembly.

Accessories

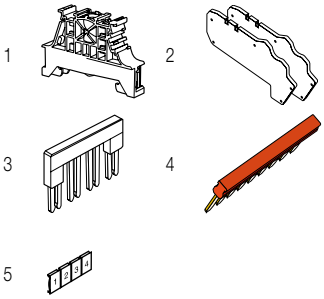

	Description			Color	Type	Part Number		Pkg pce	Weight (1 pce) g
1	**End stops**	5.2 mm	0.205 in	Dark grey	BAZ1	1SNK900002R0000		50	5.30
		10 mm	0.394 in		BAM4	1SNK900001R0000		50	14.00
2	**End section kits**	5 mm	0.197 in	Grey	FED5.C3.L	1SNA290358R2500		20	10.00
3	**Jumper bars**	2 poles	24 A	Orange	BJDL5-2	1SNA291102R2300		50	1.00
		3 poles			BJDL5-3	1SNA291103R2400		50	0.70
		4 poles			BJDL5-4	1SNA291104R2500		50	0.80
		5 poles			BJDL5-5	1SNA291105R2600		20	0.90
		10 poles			BJDL5-10	1SNA291110R2600		20	1.20
4	**Lateral jumper bars** 34 poles			Blue	PC5.34	1SNA290365R1400		10	18.00
				Red		1SNA290366R1500		10	18.00
				Green-yellow		1SNA290367R1600		10	18.00
5	**Terminal block markers** Blank card			White	RC55	1SNA230000R1200		1	2.90

Complete list of accessories is indicated in the terminal block datasheet.
Some accessories such as jumper bars may modify the terminal block's ratings: complete information in the accessories catalogue pages.

Technical data valid for copper conductors only.

D2.5/5.C3.L spring terminal blocks

Sensors / Actuators - 5 mm 0.197 in spacing

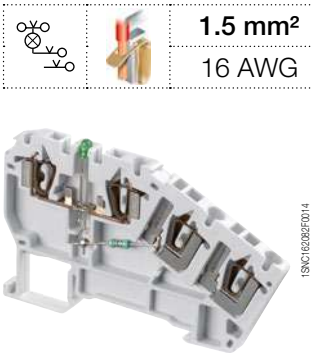

1.5 mm²
16 AWG

1SNC162082F0014

D2.5/5.C3.L

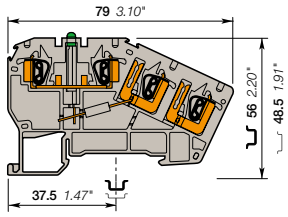

5 mm 0.197 in spacing

Description

- Save spacing with 3 decks terminal block, adapted for sensor/actuator in just 5 mm 0.197 in spacing,
- Easy to access thanks to the front wiring entry,
- Clamping contact pressure non dependent on the operator and automatic creeping compensation,
- Quickly identify the circuit status thanks to the indicator.

Ordering details

Description		Color	Type	Part Number		Pkg pce	Weight (1 pce) g
Sensor	3 wires with green bidirectional LED 24 V DC	Grey	D2.5/5.C3.L.L	1SNA290352R1700		50	11.00

Main technical data

		IEC	UL	CSA
1 conductor per clamp	Rigid: Solid/Stranded	0.14-1.5 mm²		24-16 AWG
	Flexible without ferrule	0.14-1.5 mm²		
	Flexible with non insulated ferrule			
	Flexible with insulated ferrule	0.5-1 mm²		
	Gauge	A1		
Rated current / Rated cross section		17.5 A / 1.5 mm²		10 A / 16 AWG
Rated short-time withstand current (1s)		180 A		
Rated voltage		300 V		300 V
Impulse withstand voltage		4000 V		
Protection		IP20	NEMA 1	

The connecting capacity data for one Rigid: Solid/Stranded, or one Flexible conductor (when applicable) is a mandatory information required by IEC, UL and CSA standards (Copper conductors). All other data are provided as supplementary information only. For more details, please consult our CB, UL or CSA certificates and technical datasheet available on http://www.TE.com

RoHS CSA Gost R

Mounting instructions

Rail	TH 35-7.5, TH 35-15
Wire stripping length	9.5 mm 0.37 in
Tool	Flat screwdriver Ø 3.5 mm Ø 0.138 in

Notes

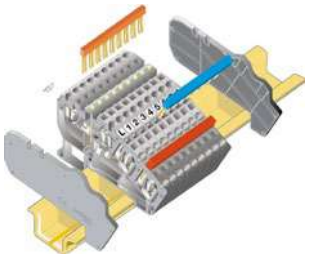

To obtain finger safety (IP20) of a terminal block assembly with comb type jumper bar, it is necessary to put one end section on each side of the terminal block assembly.

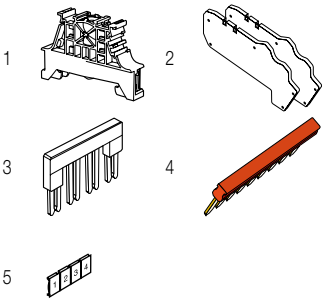

Accessories

	Description			Color	Type	Part Number		Pkg pce	Weight (1 pce) g
1	**End stops**	5.2 mm	0.205 in	Dark grey	BAZ1	1SNK900002R0000		50	5.30
		10 mm	0.394 in		BAM4	1SNK900001R0000		50	14.00
2	**End section kits**	5 mm	0.197 in.	Grey	FED5.C3.L	1SNA290358R2500		20	10.00
3	**Jumper bars**	2 poles	24 A	Orange	BJDL5-2	1SNA291102R2300		50	1.00
		3 poles			BJDL5-3	1SNA291103R2400		50	0.70
		4 poles			BJDL5-4	1SNA291104R2500		50	0.80
		5 poles			BJDL5-5	1SNA291105R2600		20	0.90
		10 poles			BJDL5-10	1SNA291110R2600		20	1.20
4	**Lateral jumper bars**	34 poles		Blue	PC5.34	1SNA290365R1400		10	18.00
				Red		1SNA290366R1500		10	18.00
				Green-yellow		1SNA290367R1600		10	18.00
5	**Terminal block markers**	Blank card		White	RC55	1SNA230000R1200		1	2.90

Complete list of accessories is indicated in the terminal block datasheet.
Some accessories such as jumper bars may modify the terminal block's ratings: complete information in the accessories catalogue pages.

Technical data valid for copper conductors only.

1SNC162028S0201 - Rev. A

D2.5/5.C4.L spring terminal blocks

Sensors / Actuators - 5 mm 0.197 in spacing

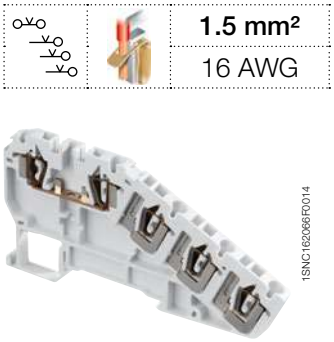

D2.5/5.C4.L

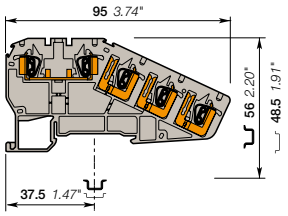

5 mm 0.197 in spacing

	1.5 mm²
	16 AWG

Description

- Save spacing with 4 decks terminal block, adapted for sensor/actuator in just 5 mm 0.197 in spacing,
- Easy to access thanks to the front wiring entry,
- Clamping contact pressure non dependent on the operator and automatic creeping compensation.

Ordering details

Description		Color	Type	Part Number		Pkg pce	Weight (1 pce) g
Sensor	4 wires sensor	Grey	D2.5/5.C4.L	1SNA290354R1100		50	13.00

Main technical data

		IEC	UL	CSA
1 conductor per clamp	Rigid: Solid/Stranded	0.14-1.5 mm²		24-16 AWG
	Flexible without ferrule	0.14-1.5 mm²		
	Flexible with non insulated ferrule			
	Flexible with insulated ferrule	0.5-1 mm²		
	Gauge	A1		
Rated current / Rated cross section		17.5 A / 1.5 mm²		10 A / 16 AWG
Rated short-time withstand current (1s)		180 A		
Rated voltage		300 V		300 V
Impulse withstand voltage		4000 V		
Protection		IP20	NEMA 1	

The connecting capacity data for one Rigid: Solid/Stranded, or one Flexible conductor (when applicable) is a mandatory information required by IEC, UL and CSA standards (Copper conductors). All other data are provided as supplementary information only. For more details, please consult our CB, UL or CSA certificates and technical datasheet available on http://www.TE.com

RoHS CSA Gost R

Mounting instructions

Rail	TH 35-7.5, TH 35-15
Wire stripping length	9.5 mm 0.37 in
Tool	Flat screwdriver Ø 3.5 mm Ø 0.138 in

Notes

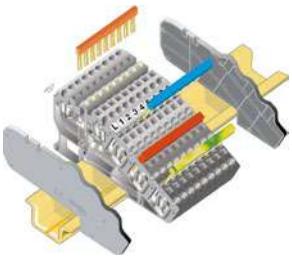

To obtain finger safety (IP20) of a terminal block assembly with comb type jumper bar, it is necessary to put one end section on each side of the terminal block assembly.

Accessories

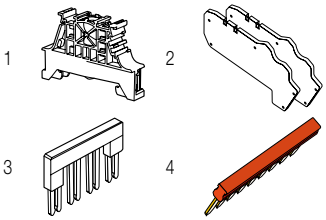

	Description			Color	Type	Part Number		Pkg pce	Weight (1 pce) g
1	**End stops**	5.2 mm	0.205 in	Dark grey	BAZ1	1SNK900002R0000		50	5.30
		10 mm	0.394 in		BAM4	1SNK900001R0000		50	14.00
2	**End section kits**	5 mm	0.197 in	Grey	FED5.C4.L	1SNA290360R2300		20	10.00
3	**Jumper bars**	2 poles	24 A	Orange	BJDL5-2	1SNA291102R2300		50	1.00
		3 poles			BJDL5-3	1SNA291103R2400		50	0.70
		4 poles			BJDL5-4	1SNA291104R2500		50	0.80
		5 poles			BJDL5-5	1SNA291105R2600		20	0.90
		10 poles			BJDL5-10	1SNA291110R2600		20	1.20
4	**Lateral jumper bars** 34 poles			Blue	PC5.34	1SNA290365R1400		10	18.00
				Red		1SNA290366R1500		10	18.00
				Green-yellow		1SNA290367R1600		10	18.00
5	**Terminal block markers** Blank card			White	RC55	1SNA230000R1200		1	2.90

Complete list of accessories is indicated in the terminal block datasheet.
Some accessories such as jumper bars may modify the terminal block's ratings: complete information in the accessories catalogue pages.

Technical data valid for copper conductors only.

1SNC162029S0201 - Rev. A

D2.5/5.C4.L spring terminal blocks

Sensors / Actuators - 5 mm 0.197 in spacing

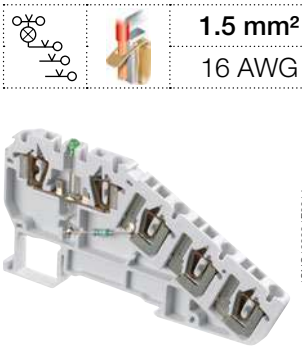

1.5 mm²
16 AWG

1SNC162081F0014

D2.5/5.C4.L

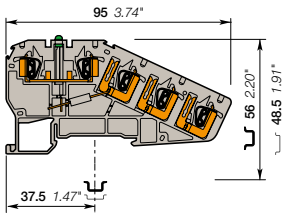

5 mm 0.197 in spacing

Description

- Save spacing with 4 decks terminal block, adapted for sensor/actuator in just 5 mm 0.197 in spacing,
- Easy to access thanks to the front wiring entry,
- Clamping contact pressure non dependent on the operator and automatic creeping compensation,
- Quickly identify the circuit status thanks to the indicator.

Ordering details

Description		Color	Type	Part Number		Pkg pce	Weight (1 pce) g
Sensor	4 wires with bidirectional green LED 24 V DC	Grey	D2.5/5.C4.L.L	1SNA290356R1300		50	13.00

Main technical data

		IEC	UL	CSA
1 conductor per clamp	Rigid: Solid/Stranded	0.14-1.5 mm²		24-16 AWG
	Flexible without ferrule	0.14-1.5 mm²		
	Flexible with non insulated ferrule			
	Flexible with insulated ferrule	0.5-1 mm²		
	Gauge	A1		
Rated current / Rated cross section		17.5 A / 1.5 mm²		10 A / 16 AWG
Rated short-time withstand current (1s)		180 A		
Rated voltage		300 V		300 V
Impulse withstand voltage		4000 V		
Protection		IP20	NEMA 1	

The connecting capacity data for one Rigid: Solid/Stranded, or one Flexible conductor (when applicable) is a mandatory information required by IEC, UL and CSA standards (Copper conductors). All other data are provided as supplementary information only. For more details, please consult our CB, UL or CSA certificates and technical datasheet available on http://www.TE.com

RoHS CSA Gost R

Mounting instructions

Rail	TH 35-7.5, TH 35-15
Wire stripping length	9.5 mm 0.37 in
Tool	Flat screwdriver Ø 3.5 mm Ø 0.138 in

Notes

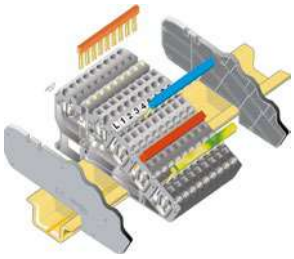

To obtain finger safety (IP20) of a terminal block assembly with comb type jumper bar, it is necessary to put one end section on each side of the terminal block assembly.

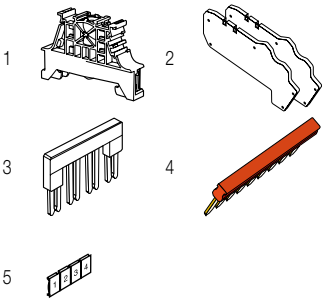

Accessories

	Description			Color	Type	Part Number		Pkg pce	Weight (1 pce) g
1	**End stops**	5.2 mm	0.205 in	Dark grey	BAZ1	1SNK900002R0000		50	5.30
		10 mm	0.394 in		BAM4	1SNK900001R0000		50	14.00
2	**End section kits**	5 mm	0.197 in	Grey	FED5.C4.L	1SNA290360R2300		20	10.00
3	**Jumper bars**	2 poles	24 A	Orange	BJDL5-2	1SNA291102R2300		50	1.00
		3 poles			BJDL5-3	1SNA291103R2400		50	0.70
		4 poles			BJDL5-4	1SNA291104R2500		50	0.80
		5 poles			BJDL5-5	1SNA291105R2600		20	0.90
		10 poles			BJDL5-10	1SNA291110R2600		20	1.20
4	**Lateral jumper bars**	34 poles		Blue	PC5.34	1SNA290365R1400		10	18.00
				Red		1SNA290366R1500		10	18.00
				Green-yellow		1SNA290367R1600		10	18.00
5	**Terminal block markers**	Blank card		White	RC55	1SNA230000R1200		1	2.90

Complete list of accessories is indicated in the terminal block datasheet.
Some accessories such as jumper bars may modify the terminal block's ratings: complete information in the accessories catalogue pages.

Technical data valid for copper conductors only.

1SNC162030S0201 - Rev. B

D1/5.C3.ADO IDC terminal blocks

Sensors / Actuators ADO-ADO - 5 mm 0.197 in spacing

1 mm²
20 AWG

1SNC163136F0014

D1/5.C3.ADO

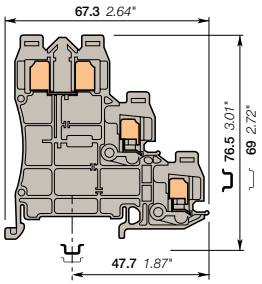

5 mm 0.197 in spacing

Description

- Save spacing with 3 decks terminal block, adapted for sensor/actuator in just 5 mm 0.197 in spacing,
- With the TE Connectivity ADO System®, experience the fastest and most reliable connection on the market,
- Designed for control applications exposed to severe constrains (vibrations, shocks, corrosion etc.),
- Up to 2 wires on the upper deck.

Ordering details

Description		Color	Type	Part Number		Pkg pce	Weight (1 pce) g
Sensor	For 3 wire sensor	Grey	D1/5.C3.ADO	1SNA399689R1300		50	9.00

Main technical data

		IEC	UL	CSA
ADO	Rigid: Solid/Stranded	0.2-1 mm²		24-20 AWG
	Flexible without ferrule	0.22-1 mm²		
Screw clamp	Rigid: Solid/Stranded			
	Flexible without ferrule			
	Flexible with insulated ferrule			
	Gauge			
Rated current / Rated cross section		13.5 A / 1 mm²		12 A / 20 AWG
Rated short-time withstand current (1s)		120 A		
Rated voltage		250 V		600 V
Impulse withstand voltage		8000 V		
Protection		IP20	NEMA 1	

Mounting instructions

Rail		TH 35-7.5, TH 35-15
Wire stripping length		
Tool		
Torque		

The connecting capacity data for one Rigid: Solid/Stranded, or one Flexible conductor (when applicable) is a mandatory information required by IEC, UL and CSA standards (Copper conductors). All other data are provided as supplementary information only. For more details, please consult our CB, UL or CSA certificates and technical datasheet available on http://www.TE.com

RoHS cCSAus Gost R

Notes

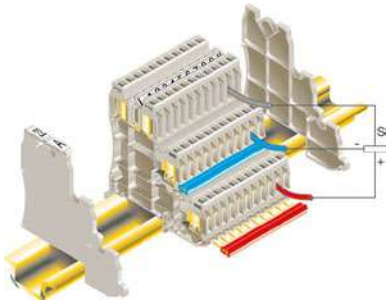

Accessories

	Description			Color	Type	Part Number		Pkg pce	Weight (1 pce) g
1	**End stops**	10 mm	0.394 in	Dark grey	BAM4	1SNK900001R0000		50	14.00
		5.2 mm	0.205 in		BAZ1	1SNK900002R0000		50	5.30
2	**End section kits**			Grey	FED5.C3.ADO	1SNA399678R2700		20	10.00
3	**Lateral jumper bars**	10 poles		Red	PC52.10	1SNA399683R0500		10	5.00
				Blue		1SNA399684R0600		10	5.00
				Green-yellow		1SNA399685R0700		10	5.00
		66 poles		Red	PC52.66	1SNA399707R1500		5	30.00
				Blue		1SNA399708R2600		5	30.00
				Green-yellow		1SNA399709R2700		5	30.00
4	**Tools**	Semi automatic tool			OUPAD	1SNA178944R0400		1	205.00
		Hand tool			OUMAD	1SNA179466R0600		1	29.00
5	**Terminal block markers**	Blank card		White	RC55	1SNA230000R1200		1	2.90

1 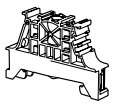
2 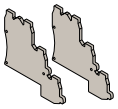
3
4
5

Complete list of accessories is indicated in the terminal block datasheet.
Some accessories such as jumper bars may modify the terminal block's ratings: complete information in the accessories catalogue pages.

Technical data valid for copper conductors only.

1SNC163044S0201 - Rev. B

D1/5.C3.ADO IDC terminal blocks

Sensors / Actuators ADO-ADO - 5 mm 0.197 in spacing

1 mm²
20 AWG

1SNC163125F0014

D1/5.C3.ADO

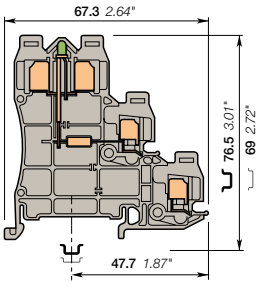

5 mm 0.197 in spacing

Description

- Save spacing with 3 decks terminal block, adapted for sensor/actuator in just 5 mm 0.197 in spacing,
- With the TE Connectivity ADO System®, experience the fastest and most reliable connection on the market,
- Designed for control applications exposed to severe constrains (vibrations, shocks, corrosion etc.),
- Up to 2 wires on the upper deck.

Ordering details

Description		Color	Type	Part Number		Pkg pce	Weight (1 pce) g
Sensor	For 3 wire sensor with green bidirectional LED 24 VDC	Grey	D1/5.C3.ADO.L	1SNA399690R1000		50	10.00

Main technical data

		IEC	UL	CSA
ADO	Rigid: Solid/Stranded	0.2-1 mm²		24-20 AWG
	Flexible without ferrule	0.22-1 mm²		
Screw clamp	Rigid: Solid/Stranded			
	Flexible without ferrule			
	Flexible with insulated ferrule			
	Gauge			
Rated current / Rated cross section		13.5 A / 1 mm²		12 A / 20 AWG
Rated short-time withstand current (1s)		120 A		
Rated voltage		250 V		600 V
Impulse withstand voltage		8000 V		
Protection		IP20	NEMA 1	

Mounting instructions

Rail	TH 35-7.5, TH 35-15
Wire stripping length	
Tool	
Torque	

The connecting capacity data for one Rigid: Solid/Stranded, or one Flexible conductor (when applicable) is a mandatory information required by IEC, UL and CSA standards (Copper conductors). All other data are provided as supplementary information only. For more details, please consult our CB, UL or CSA certificates and technical datasheet available on http://www.TE.com

RoHS cCSAus Gost R

Notes

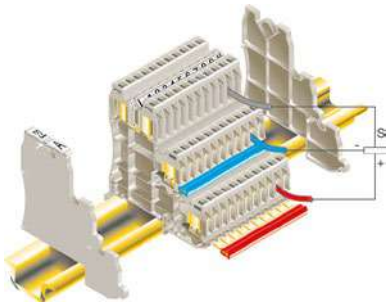

Accessories

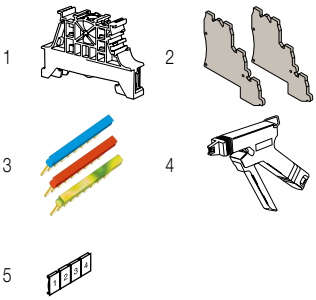

	Description			Color	Type	Part Number		Pkg pce	Weight (1 pce) g
1	**End stops**	10 mm	0.394 in	Dark grey	BAM4	1SNK900001R0000		50	14.00
		5.2 mm	0.205 in		BAZ1	1SNK900002R0000		50	5.30
2	**End section kits**			Grey	FED5.C3.ADO	1SNA399678R2700		20	10.00
3	**Lateral jumper bars**	10 poles		Red	PC52.10	1SNA399683R0500		10	5.00
				Blue		1SNA399684R0600		10	5.00
				Green-yellow		1SNA399685R0700		10	5.00
		66 poles		Red	PC52.66	1SNA399707R1500		5	30.00
				Blue		1SNA399708R2600		5	30.00
				Green-yellow		1SNA399709R2700		5	30.00
4	**Tools**	Semi automatic tool			OUPAD	1SNA178944R0400		1	205.00
		Hand tool			OUMAD	1SNA179466R0600		1	29.00
5	**Terminal block markers**	Blank card		White	RC55	1SNA230000R1200		1	2.90

Complete list of accessories is indicated in the terminal block datasheet.
Some accessories such as jumper bars may modify the terminal block's ratings: complete information in the accessories catalogue pages.

Technical data valid for copper conductors only.

D1/5.C4.ADO IDC terminal blocks

Sensors / Actuators ADO-ADO - 5 mm 0.197 in spacing

1 mm²
20 AWG

1SNC163137F0014

D1/5.C4.ADO

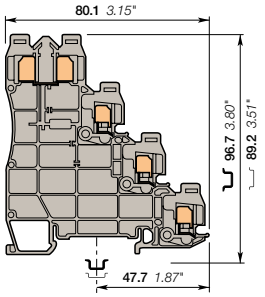

5 mm 0.197 in spacing

Description

- Save spacing with 4 decks terminal block, adapted for sensor/actuator in just 5 mm 0.197 in spacing,
- With the TE Connectivity ADO System®, experience the fastest and most reliable connection on the market,
- Designed for control applications exposed to severe constrains (vibrations, shocks, corrosion etc.),
- Up to 2 wires on the upper deck.

Ordering details

Description		Color	Type	Part Number		Pkg pce	Weight (1 pce) g
Sensor	For 4 wire sensor	Grey	D1/5.C4.ADO	1SNA399692R0600		50	

Main technical data

		IEC	UL	CSA
ADO	Rigid: Solid/Stranded	0.2-1 mm²		24-20 AWG
	Flexible without ferrule	0.22-1 mm²		
Screw clamp	Rigid: Solid/Stranded			
	Flexible without ferrule			
	Flexible with insulated ferrule			
	Gauge			
Rated current / Rated cross section		13.5 A / 1 mm²		12 A / 20 AWG
Rated short-time withstand current (1s)		120 A		
Rated voltage		250 V		600 V
Impulse withstand voltage		8000 V		
Protection		IP20	NEMA 1	

Mounting instructions

Rail		TH 35-7.5, TH 35-15
Wire stripping length		
Tool		
Torque		

The connecting capacity data for one Rigid: Solid/Stranded, or one Flexible conductor (when applicable) is a mandatory information required by IEC, UL and CSA standards (Copper conductors). All other data are provided as supplementary information only. For more details, please consult our CB, UL or CSA certificates and technical datasheet available on http://www.TE.com

RoHS cCSAus Gost R

Notes

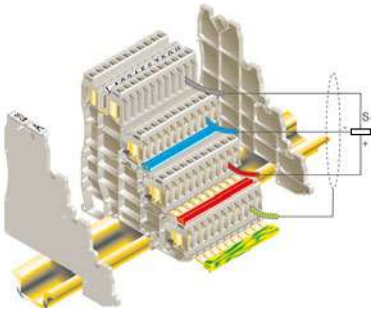

Accessories

	Description			Color	Type	Part Number		Pkg pce	Weight (1 pce) g
1	**End stops**	10 mm	0.394 in	Dark grey	BAZH1	1SNK900102R0000		20	24.00
2	**End section kits**			Grey	FED5.C4.ADO	1SNA399679R2000		10	10.00
3	**Lateral jumper bars**	10 poles		Red	PC52.10	1SNA399683R0500		10	5.00
				Blue		1SNA399684R0600		10	5.00
				Green-yellow		1SNA399685R0700		10	5.00
		66 poles		Red	PC52.66	1SNA399707R1500		5	30.00
				Blue		1SNA399708R2600		5	30.00
				Green-yellow		1SNA399709R2700		5	30.00
4	**Tools**	Semi automatic tool			OUPAD	1SNA178944R0400		1	205.00
		Hand tool			OUMAD	1SNA179466R0600		1	29.00
5	**Terminal block markers**	Blank card		White	RC55	1SNA230000R1200		1	2.90

1
2 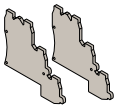
3
4
5

Complete list of accessories is indicated in the terminal block datasheet.
Some accessories such as jumper bars may modify the terminal block's ratings: complete information in the accessories catalogue pages.

Technical data valid for copper conductors only.

D1/5.C4.ADO IDC terminal blocks

Sensors / Actuators ADO-ADO - 5 mm 0.197 in spacing

1 mm²

1SNC163138F0014

D1/5.C4.ADO

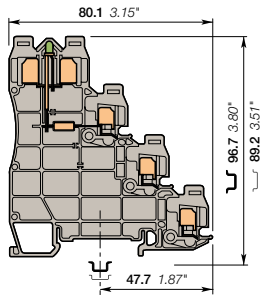

5 mm 0.197 in spacing

Description

- Save spacing with 4 decks terminal block, adapted for sensor/actuator in just 5 mm 0.197 in spacing,
- With the TE Connectivity ADO System®, experience the fastest and most reliable connection on the market,
- Designed for control applications exposed to severe constrains (vibrations, shocks, corrosion etc.),
- Up to 2 wires on the upper deck.

Ordering details

Description		Color	Type	Part Number		Pkg pce	Weight (1 pce) g
Sensor	For 4 wire sensor with green bidirectional LED 24 VDC	Grey	D1/5.C4.ADO.L	1SNA399693R0700		50	

Main technical data

		IEC	UL	CSA
ADO	Rigid: Solid/Stranded	0.2-1 mm²		
	Flexible without ferrule	0.22-1 mm²		
Screw clamp	Rigid: Solid/Stranded			
	Flexible without ferrule			
	Flexible with insulated ferrule			
	Gauge			
Rated current / Rated cross section		13.5 A / 1 mm²		
Rated short-time withstand current (1s)		120 A		
Rated voltage		250 V		
Impulse withstand voltage		8000 V		
Protection		IP20	NEMA 1	

Mounting instructions

Rail		TH 35-7.5, TH 35-15
Wire stripping length		
Tool		
Torque		

The connecting capacity data for one Rigid: Solid/Stranded, or one Flexible conductor (when applicable) is a mandatory information required by IEC, UL and CSA standards (Copper conductors). All other data are provided as supplementary information only. For more details, please consult our CB, UL or CSA certificates and technical datasheet available on http://www.TE.com

RoHS RoHS Gost R

Notes

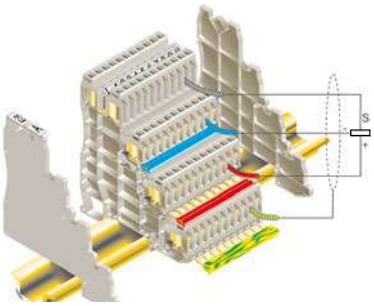

Accessories

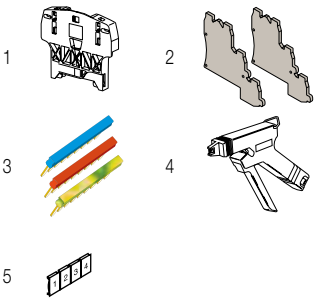

	Description			Color	Type	Part Number		Pkg pce	Weight (1 pce) g
1	**End stops**	10 mm	0.394 in	Dark grey	BAZH1	1SNK900102R0000		20	24.00
2	**End section kits**			Grey	FED5.C4.ADO	1SNA399679R2000		10	10.00
3	**Lateral jumper bars**	10 poles		Red	PC52.10	1SNA399683R0500		10	5.00
				Blue		1SNA399684R0600		10	5.00
				Green-yellow		1SNA399685R0700		10	5.00
		66 poles		Red	PC52.66	1SNA399707R1500		5	30.00
				Blue		1SNA399708R2600		5	30.00
				Green-yellow		1SNA399709R2700		5	30.00
4	**Tools**	Semi automatic tool			OUPAD	1SNA178944R0400		1	205.00
		Hand tool			OUMAD	1SNA179466R0600		1	29.00
5	**Terminal block markers**	Blank card		White	RC55	1SNA230000R1200		1	2.90

Complete list of accessories is indicated in the terminal block datasheet.
Some accessories such as jumper bars may modify the terminal block's ratings: complete information in the accessories catalogue pages.

Technical data valid for copper conductors only.

1SNC163047S0201 - Rev. B

1SNC160103S0201

Dedicated applications terminal blocks
Installation terminal blocks

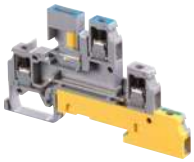
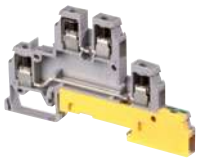

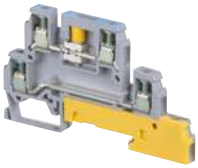
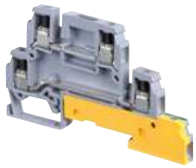

Technologies presentation			208
Overview			210

Screw clamp technology

Multi-level terminal blocks compatible with busbar

4 mm² / 12 AWG	**D4/6.NTLP**	Disconnect neutral + feed-through + ground	213
	D4/6.NLP	Neutral + feed-through + ground	214
	D4/6.LLP	Feed-through + ground	215
	D4/6.LL	Feed-through	216
	D4/6.LNTP1 & D4/6.LNTP3	Disconnect neutral + feed-through + ground	217
	D4/6.LNTP2 & D4/6.LNTP8	Neutral + feed-through + ground	219
	D4/6.LNTP4 & D4/6.LNTP7	Feed-through + ground	221
	D4/6.LNTP6	Feed-through	223

Multi-level terminal blocks

4 mm² / 12 AWG	**D4/6.A.NTLP**	Disconnect neutral + feed-through + ground	224
	D4/6.A.LLP	Feed-through + ground	225

Compatible with busbar

2.5 mm²	**MA2.5/5.NT**	Neutral disconnect	226
4 mm²	**M4/6.NT**	Neutral disconnect	227
6 mm²	**M6/8.NT**	Neutral disconnect	228
10 mm²	**M10/10.NT**	Neutral disconnect	229
16 mm²	**M16/12.NT**	Neutral disconnect	230
35 mm²	**M35/16.NT**	Neutral disconnect	231

Spring clamp technology

Multi-level terminal blocks compatible with busbar

2.5 mm² / 12 AWG	**D2.5/5.NTLP.L**	Disconnect neutral + feed-through + ground	232
	D2.5/5.NLP.L	Neutral + feed-through + ground	233
	D2.5/5.NL.L	Neutral + feed-through	234
	D2.5/5.LLP.L	Feed-through + ground	235
	D2.5/5.LL.L	Feed-through	236

1SNC160103S0201

The preferred choice for building industry

The installation terminal blocks are largely used in distribution cabinets of public buildings and meet wiring and connection requirements of installations designed in accordance with DIN VDE 0100 or DIN VDE 0108.

They allow:
- Compact signal distribution thanks to multi-level terminal locks
- Insulation test without disconnecting the neutral conductor thanks to neutral disconnect function on TNS or TNC-S networks.

Select from our various choice of functions and technologies

Installation terminal blocks

Our product family offer multi-circuit configuration to ease the distribution of single phase or 3 phase circuits.
Installation terminal blocks are proposed in screw clamp technology.
Various configurations allow distribution of feed-through, neutral, neutral disconnect and ground circuits in a compact format.
Select from our single type terminal blocks or prefer multi-circuit compact and closed solution combining up to 9 circuits on one single terminal block.
Neutral bar is aligned with standard single deck terminal blocks and ensures full compatibility with standard feed-through, neutral disconnect, or ground terminal blocks.

Neutral disconnect terminal blocks

Neutral disconnect function is mandatory on TNS or TN-C-S networks used in public buildings and installation complying with VDE 0108.
Standard specifies:
"The distribution must be designed so that it is possible to measure the insulation resistance of all conductors to ground for each individual outgoing circuit with conductor cross sections up to 10 mm².
This measurement must be performed without disconnecting the neutral conductor. e.g. through the installation of neutral conductor disconnect terminal blocks."
Our terminals allow simple connection or disconnection of neutral bar thanks to a sliding link.

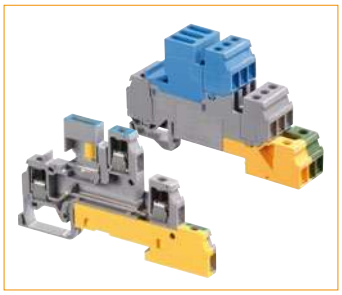

Multi-level screw clamp terminal blocks

Multi-level spring clamp terminal blocks

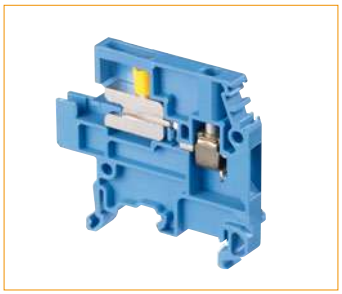

Neutral disconnect: screw clamp terminal blocks

1SNC161166S0201

3 phase distribution example with installation screw clamp terminal blocks

D4/6.NTLP allows single phase distribution and neutral disconnect
D4/6.LL complement for 3 phase configuration

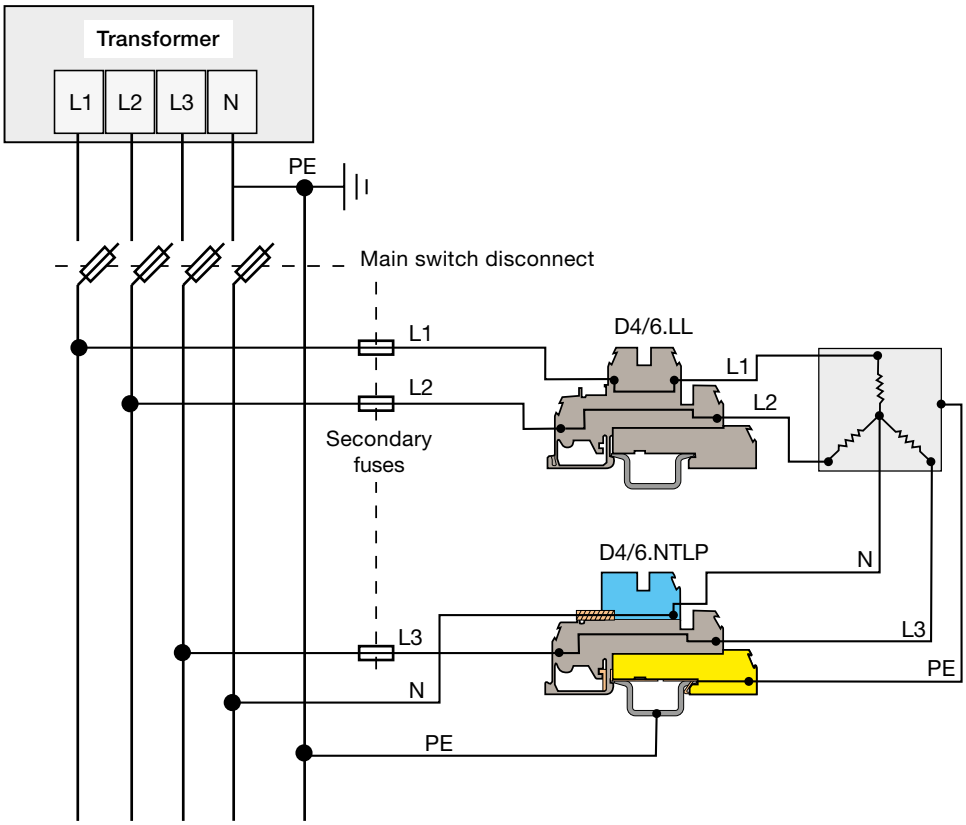

1SNC161169S0201

Screw clamp technology, multi-level terminal blocks compatible with busbar

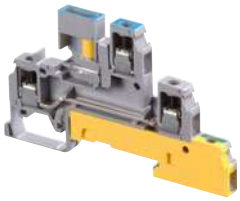
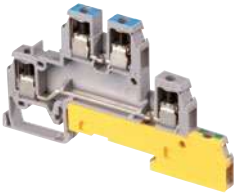
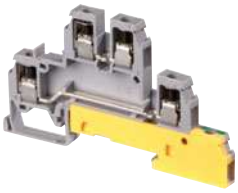
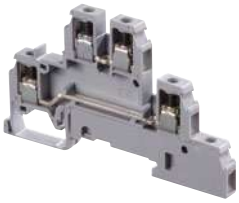

Section		NTLP	NLP	LLP	LL
IEC	UL/CSA				
4 mm²	12 AWG	**D4/6.NTLP** 6 mm 0.236 in	**D4/6.NLP** 6 mm 0.236 in	**D4/6.LLP** 6 mm 0.236 in	**D4/6.LL** 6 mm 0.236 in

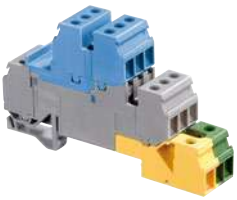

Section		NTLP		NLP		LLP		LL
IEC	UL/CSA							
4 mm²	12 AWG	**D4/6.LNTP1**	**D4/6.LNTP3**	**D4/6.LNTP2**	**D4/6.LNTP8**	**D4/6.LNTP4**	**D4/6.LNTP7**	**D4/6.LNTP6**
		6 mm 0.236 in		6 mm 0.236 in		6 mm 0.236 in		6 mm 0.236 in

Screw clamp technology, multi-level terminal blocks

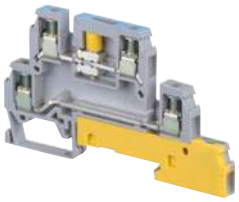
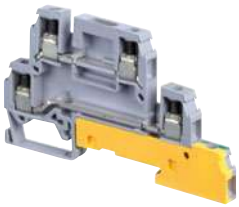

Section		NTLP	NLP	LLP	LL
IEC	UL/CSA				
4 mm²	12 AWG	**D4/6.A.NTLP** 6 mm 0.236 in		**D4/6.A.LLP** 6 mm 0.236 in	

1SNC160102S0201

Screw clamp technology, compatible with busbar

Section		Neutral disconnect		Feed-through		Ground	
IEC	UL/CSA						
2.5 mm		MA2.5/5.NT	5 mm 0.197 in	MA2.5/5	5 mm 0.197 in	MA2.5/5.P	5 mm 0.197 in
4 mm²	12 AWG	M4/6.NT	6 mm 0.236 in	M4/6	6 mm 0.236 in	M4/6.P	6 mm 0.236 in
6 mm²	8 AWG	M6/8.NT	8 mm 0.315 in	M6/8	8 mm 0.315 in	M6/8.P	8 mm 0.315 in
10 mm²	6 AWG	M10/10.NT	10 mm 0.394 in	M10/10	10 mm 0.394 in	M10/10.P	10 mm 0.394 in
16 mm²		M16/12.NT	12 mm 0.472 in	M16/12	12 mm 0.472 in	M16/12.P	12 mm 0.472 in
35 mm²	0 AWG	M35/16.NT	17 mm 0.669 in	M35/16	16 mm 0.630 in	M35/16.P	16 mm 0.630 in

1SNC160102S0201

Spring clamp technology, multi-level terminal blocks compatible with busbar

		NTLP	NLP	NL	LLP	LL
Section						
IEC	UL/CSA					
2.5 mm²	12 AWG	D2.5/5.NTLP.L 5 mm 0.197 in	D2.5/5.NLP.L 5 mm 0.197 in	D2.5/5.NL.L 5 mm 0.197 in	D2.5/5.LLP.L 5 mm 0.197 in	D2.5/5.LL.L 5 mm 0.197 in

1SNC160102S0201

D4/6.NTLP screw clamp terminal blocks
Installation - 6 mm 0.236 in spacing

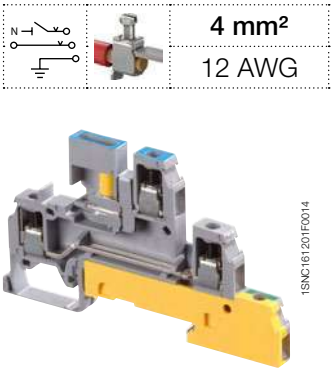

4 mm²	
12 AWG	

D4/6.NTLP

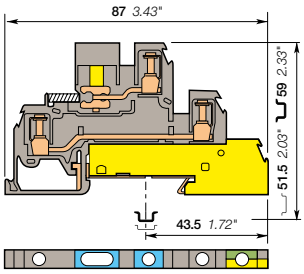

6 mm 0.236 in spacing

Description

- According to DIN 43880 standards (dimension above the rail 35 x 7.5 ≤ 44 mm),
- Compatible with busbar.

Ordering details

Description		Color	Type	Part Number		Pkg pce	Weight (1 pce) g
Installation	Disconnect neutral + feed-through + ground	Grey, blue, Green-yellow	D4/6.NTLP	1SNA110439R2200		20	20.00

Main technical data

		IEC	UL	CSA
1 conductor per clamp	Rigid: Solid/Stranded	0.2-4 mm²	18-12 AWG	
	Flexible without ferrule	0.2-4 mm²		
	Flexible with insulated ferrule			
	Gauge	A4		
Rated current / Rated cross section		30 A / 4 mm²	20 A / 12 AWG	
Rated short-time withstand current (1s)		480 A		
Rated voltage		320 V	300 V	
Impulse withstand voltage		4000 V		
Protection		IP20	NEMA 1	

Mounting instructions

Rail	G32, TH 35-7.5, TH 35-15
Wire stripping length	9.5 mm 0.37 in
Screw clamp Tool	Flat screwdriver Ø 4 mm Ø 0.157 in
Torque	0.4 - 0.8 N.m 3.5 - 7 lb.in
Disconnect device Tool	Flat screwdriver Ø 4 mm Ø 0.157 in
Torque	0.4 - 0.6 N.m 3.5 - 5.3 lb.in

The connecting capacity data for one Rigid: Solid/Stranded, or one Flexible conductor (when applicable) is a mandatory information required by IEC, UL and CSA standards (Copper conductors). All other data are provided as supplementary information only. For more details, please consult our CB, UL or CSA certificates and technical datasheet available on http://www.TE.com

CE RoHS USR CNR Gost R

Accessories

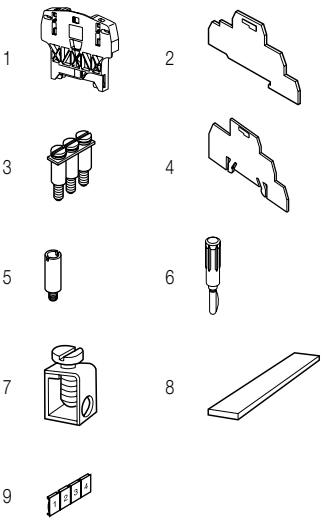

	Description			Color	Type	Part Number		Pkg pce	Weight (1 pce) g
1	**End stops**	10 mm	0.394 in	Dark grey	BAZH1	1SNK900102R0000		20	24.00
2	**End sections**	1 mm	0.039 in	Grey	FED6	1SNA116964R1200		20	3.00
3	**Jumper bars**	2 poles	32 A		BJM62	1SNA173217R2600		10	2.00
		3 poles				1SNA173218R0700		10	3.00
		4 poles				1SNA173219R0000		10	4.00
		5 poles				1SNA173221R2200		10	5.00
		10 poles				1SNA173226R2700		10	10.00
4	**Circuit separators**	1.5 mm	0.059 in	Grey	SCFD	1SNA114117R0700		10	10.00
5	**Test sockets**	DIA 2 mm 0.079 in			AL2	1SNA167319R0600		50	
6	**Test plugs**	DIA 2 mm 0.079 in		Black	FC2	1SNA007865R2600		100	
7	**Clamps**	0.5-35 mm²			SFB1	1SNA163860R0500		50	12.00
		16-35 mm² 6-2 AWG			SFB2	1SNA168956R0600		50	11.00
8	**Busbars**	Busbars			BO3	1SNA164406R2400		1	
9	**Terminal block markers**	Blank card		White	RC65	1SNA232000R0000		1	3.60

Complete list of accessories is indicated in the terminal block datasheet.
Some accessories such as jumper bars may modify the terminal block's ratings: complete information in the accessories catalogue pages.

Technical data valid for copper conductors only.

1SNC161064S0201 - Rev. A

D4/6.NLP screw clamp terminal blocks
Installation - 6 mm 0.236 in spacing

4 mm²	
12 AWG	

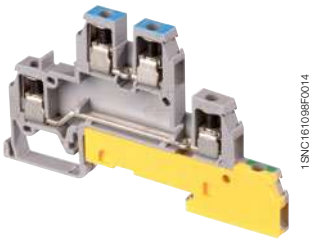

D4/6.NLP

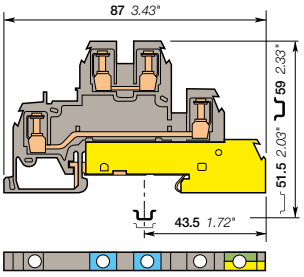

6 mm 0.236 in spacing

Description

- According to DIN 43880 standards (dimension above the rail 35 x 7.5 ≤ 44 mm),
- Compatible with busbar.

Ordering details

Description		Color	Type	Part Number		Pkg pce	Weight (1 pce) g
Installation	Neutral + feed-through + ground	Grey, blue, Green-yellow	D4/6.NLP	1SNA110440R0700		20	20.00

Main technical data

		IEC	UL	CSA
1 conductor per clamp	Rigid: Solid/Stranded	0.2-4 mm²	18-12 AWG	
	Flexible without ferrule	0.2-4 mm²		
	Flexible with insulated ferrule			
	Gauge	A4		
Rated current / Rated cross section		30 A / 4 mm²	20 A / 12 AWG	
Rated short-time withstand current (1s)		480 A		
Rated voltage		400 V	300 V	
Impulse withstand voltage		6000 V		
Protection		IP20	NEMA 1	

Mounting instructions

Rail	G32, TH 35-7.5, TH 35-15
Wire stripping length	9.5 mm 0.37 in
Tool	Flat screwdriver Ø 4 mm Ø 0.157 in
Torque	0.4 - 0.8 N.m 3.5 - 7 lb.in

The connecting capacity data for one Rigid: Solid/Stranded, or one Flexible conductor (when applicable) is a mandatory information required by IEC, UL and CSA standards (Copper conductors). All other data are provided as supplementary information only. For more details, please consult our CB, UL or CSA certificates and technical datasheet available on http://www.TE.com

CE RoHS USR CNR Gost R

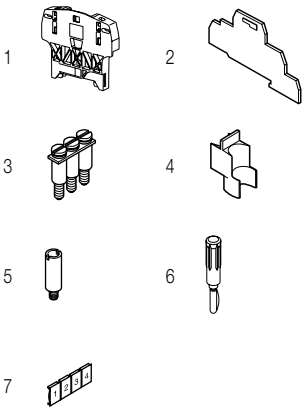

Accessories

	Description			Color	Type	Part Number		Pkg pce	Weight (1 pce) g
1	**End stops**	10 mm	0.394 in	Dark grey	BAZH1	1SNK900102R0000		20	24.00
2	**End sections**	1 mm	0.039 in	Grey	FED6	1SNA116964R1200		20	3.00
3	**Jumper bars**	2 poles	32 A		BJM62	1SNA173217R2600		10	2.00
		3 poles				1SNA173218R0700		10	3.00
		4 poles				1SNA173219R0000		10	4.00
		5 poles				1SNA173221R2200		10	5.00
		10 poles				1SNA173226R2700		10	10.00
4	**Circuit separators**	0 mm	0 in	White	SCD	1SNA103189R2600		10	1.00
		1.5 mm	0.059 in	Grey	SCFD	1SNA114117R0700		10	10.00
5	**Test sockets**	DIA 2 mm	0.079 in		AL2	1SNA167319R0600		50	
6	**Test plugs**	DIA 2 mm	0.079 in	Black	FC2	1SNA007865R2600		100	
7	**Terminal block markers**	Blank card		White	RC65	1SNA232000R0000		1	3.60

Complete list of accessories is indicated in the terminal block datasheet.
Some accessories such as jumper bars may modify the terminal block's ratings: complete information in the accessories catalogue pages.

Technical data valid for copper conductors only.

1SNC161066S0201 - Rev. A

D4/6.LLP screw clamp terminal blocks
Installation - 6 mm 0.236 in spacing

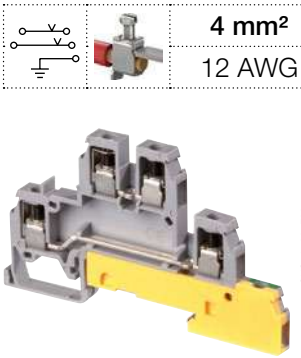

4 mm²
12 AWG

D4/6.LLP

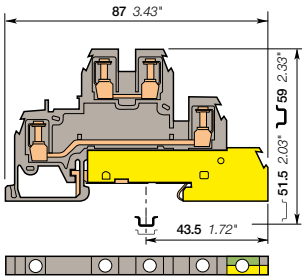

6 mm 0.236 in spacing

Description

- According to DIN 43880 standards (dimension above the rail 35 x 7.5 ≤ 44 mm),
- Compatible with busbar.

Ordering details

Description		Color	Type	Part Number		Pkg pce	Weight (1 pce) g
Installation	2 feed-through + ground	Grey, Green-yellow	D4/6.LLP	1SNA110441R2400		20	20.00

Main technical data

		IEC	UL	CSA
1 conductor per clamp	Rigid: Solid/Stranded	0.2-4 mm²	18-12 AWG	
	Flexible without ferrule	0.2-4 mm²		
	Flexible with insulated ferrule			
	Gauge	A4		
Rated current / Rated cross section		30 A / 4 mm²	20 A / 12 AWG	
Rated short-time withstand current (1s)		480 A		
Rated voltage		400 V	300 V	
Impulse withstand voltage		6000 V		
Protection		IP20	NEMA 1	

Mounting instructions

Rail	G32, TH 35-7.5, TH 35-15
Wire stripping length	9.5 mm 0.37 in
Tool	Flat screwdriver Ø 4 mm Ø 0.157 in
Torque	0.4 - 0.8 N.m 3.5 - 7 lb.in

The connecting capacity data for one Rigid: Solid/Stranded, or one Flexible conductor (when applicable) is a mandatory information required by IEC, UL and CSA standards (Copper conductors). All other data are provided as supplementary information only. For more details, please consult our CB, UL or CSA certificates and technical datasheet available on http://www.TE.com

CE RoHS USR CNR Gost R

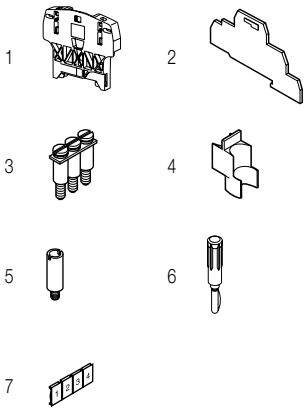

Accessories

	Description			Color	Type	Part Number		Pkg pce	Weight (1 pce) g
1	**End stops**	10 mm	0.394 in	Dark grey	BAZH1	1SNK900102R0000		20	24.00
2	**End sections**	1 mm	0.039 in	Grey	FED6	1SNA116964R1200		20	3.00
3	**Jumper bars**	2 poles	32 A		BJM62	1SNA173217R2600		10	2.00
		3 poles				1SNA173218R0700		10	3.00
		4 poles				1SNA173219R0000		10	4.00
		5 poles				1SNA173221R2200		10	5.00
		10 poles				1SNA173226R2700		10	10.00
4	**Circuit separators**	0 mm	0 in	White	SCD	1SNA103189R2600		10	1.00
		1.5 mm	0.059 in	Grey	SCFD	1SNA114117R0700		10	10.00
5	**Test sockets**	DIA 2 mm	0.079 in		AL2	1SNA167319R0600		50	
6	**Test plugs**	DIA 2 mm	0.079 in	Black	FC2	1SNA007865R2600		100	
7	**Terminal block markers**	Blank card		White	RC65	1SNA232000R0000		1	3.60

Complete list of accessories is indicated in the terminal block datasheet.
Some accessories such as jumper bars may modify the terminal block's ratings: complete information in the accessories catalogue pages.

Technical data valid for copper conductors only.

1SNC161070S0201 - Rev. A

D4/6.LL screw clamp terminal blocks
Installation - 6 mm 0.236 in spacing

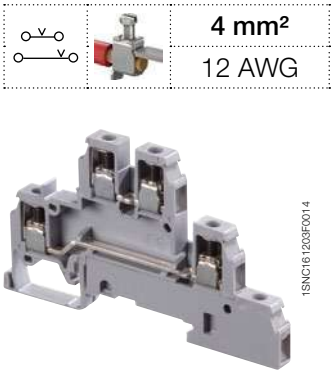

D4/6.LL

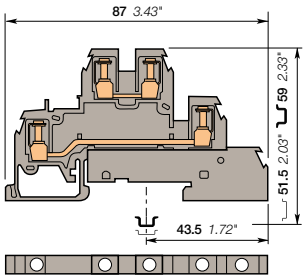

6 mm 0.236 in spacing

4 mm²
12 AWG

Description

- According to DIN 43880 standards (dimension above the rail 35 x 7.5 ≤ 44 mm),
- Compatible with busbar.

Ordering details

Description		Color	Type	Part Number		Pkg pce	Weight (1 pce) g
Installation	2 feed-through	Grey	D4/6.LL	1SNA110442R2500		20	20.00

Main technical data

		IEC	UL	CSA
1 conductor per clamp	Rigid: Solid/Stranded	0.2-4 mm²	18-12 AWG	
	Flexible without ferrule	0.2-4 mm²		
	Flexible with insulated ferrule			
	Gauge	A4		
Rated current / Rated cross section		30 A / 4 mm²	20 A / 12 AWG	
Rated short-time withstand current (1s)		480 A		
Rated voltage		400 V	300 V	
Impulse withstand voltage		6000 V		
Protection		IP20	NEMA 1	

Mounting instructions

Rail	G32, TH 35-7.5, TH 35-15
Wire stripping length	9.5 mm 0.37 in
Tool	Flat screwdriver Ø 4 mm Ø 0.157 in
Torque	0.4 - 0.8 N.m 3.5 - 7 lb.in

The connecting capacity data for one Rigid: Solid/Stranded, or one Flexible conductor (when applicable) is a mandatory information required by IEC, UL and CSA standards (Copper conductors). All other data are provided as supplementary information only. For more details, please consult our CB, UL or CSA certificates and technical datasheet available on http://www.TE.com

CE RoHS USR CNR Gost R

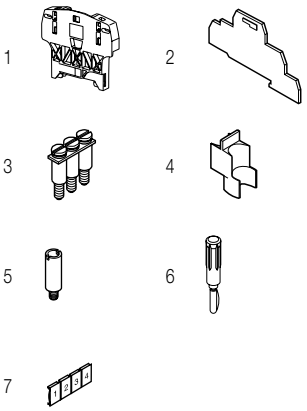

Accessories

	Description			Color	Type	Part Number		Pkg pce	Weight (1 pce) g
1	**End stops**	10 mm	0.394 in	Dark grey	BAZH1	1SNK900102R0000		20	24.00
2	**End sections**	1 mm	0.039 in	Grey	FED6	1SNA116964R1200		20	3.00
3	**Jumper bars**	2 poles	32 A		BJM62	1SNA173217R2600		10	2.00
		3 poles				1SNA173218R0700		10	3.00
		4 poles				1SNA173219R0000		10	4.00
		5 poles				1SNA173221R2200		10	5.00
		10 poles				1SNA173226R2700		10	10.00
4	**Circuit separators**	0 mm	0 in	White	SCD	1SNA103189R2600		10	1.00
		1.5 mm	0.059 in	Grey	SCFD	1SNA114117R0700		10	10.00
5	**Test sockets**	DIA 2 mm	0.079 in		AL2	1SNA167319R0600		50	
6	**Test plugs**	DIA 2 mm	0.079 in	Black	FC2	1SNA007865R2600		100	
7	**Terminal block markers**	Blank card		White	RC65	1SNA232000R0000		1	3.60

Complete list of accessories is indicated in the terminal block datasheet.
Some accessories such as jumper bars may modify the terminal block's ratings: complete information in the accessories catalogue pages.

Technical data valid for copper conductors only.

D4/6.LNTP screw clamp terminal blocks
Installation - 17.8 mm 0.701 in spacing

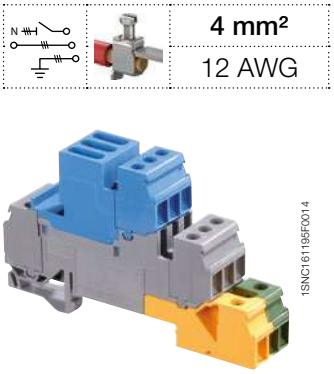

D4/6.LNTP

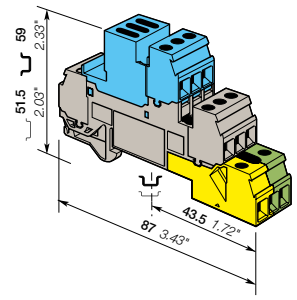

17.8 mm 0.701 in spacing

4 mm²
12 AWG

Description

- Closed terminal block: no end section needed,
- According to DIN 43880 standards (dimension above the rail 35 x 7.5 ≤ 44 mm),
- Compatible with busbar.

Ordering details

Description		Color	Type	Part Number		Pkg pce	Weight (1 pce) g
Installation	3 disconnect neutral + 3 feed-through + 3 ground	Blue, grey, green-yellow	D4/6.LNTP1	1SNA110264R0200		10	70.00

Main technical data

		IEC	UL	CSA
1 conductor per clamp	Rigid: Solid/Stranded	0.2-4 mm²	18-12 AWG	18-12 AWG
	Flexible without ferrule	0.2-4 mm²		
	Flexible with insulated ferrule			
	Gauge	A4		
Rated current / Rated cross section		30 A / 4 mm²	20 A / 12 AWG	20 A / 12 AWG
Rated short-time withstand current (1s)		480 A		
Rated voltage		320 V	300 V	300 V
Impulse withstand voltage		4000 V		
Protection		IP20	NEMA 1	

Mounting instructions

Rail	TH 35-7.5, TH 35-15
Wire stripping length	9.5 mm 0.37 in
Screw clamp Tool	Flat screwdriver Ø 4 mm Ø 0.157 in
Torque	0.5 - 0.8 N.m 4.4 - 7.1 lb.in
Disconnect device Tool	Flat screwdriver Ø 4 mm Ø 0.157 in
Torque	0.4 - 0.6 N.m 3.5 - 5.3 lb.in

The connecting capacity data for one Rigid: Solid/Stranded, or one Flexible conductor (when applicable) is a mandatory information required by IEC, UL and CSA standards (Copper conductors). All other data are provided as supplementary information only. For more details, please consult our CB, UL or CSA certificates and technical datasheet available on http://www.TE.com

CE RoHS USR CSA Gost R

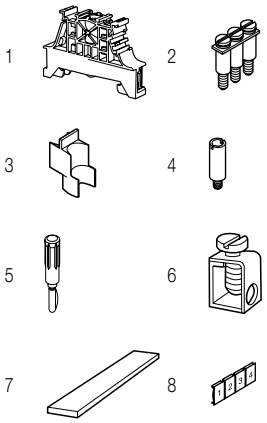

Accessories

	Description			Color	Type	Part Number		Pkg pce	Weight (1 pce) g
1	**End stops**	10 mm	0.394 in	Dark grey	BAM4	1SNK900001R0000		50	14.00
		5.2 mm	0.205 in		BAZ1	1SNK900002R0000		50	5.30
2	**Jumper bars**	2 poles	32 A		BJM62	1SNA173217R2600		10	2.00
		3 poles				1SNA173218R0700		10	3.00
		4 poles				1SNA173219R0000		10	4.00
		5 poles				1SNA173221R2200		10	5.00
		10 poles				1SNA173226R2700		10	10.00
3	**Circuit separators**	0 mm	0 in	White	SCD	1SNA103189R2600		10	1.00
		1.5 mm	0.059 in	Grey	SCFD	1SNA114117R0700		10	10.00
4	**Test sockets**	DIA 2 mm	0.079 in		AL2	1SNA167319R0600		50	
5	**Test plugs**	DIA 2 mm	0.079 in	Black	FC2	1SNA007865R2600		100	
6	**Clamps**	0.5-35 mm²			SFB1	1SNA163860R0500		50	12.00
		16-35 mm²	6-2 AWG		SFB2	1SNA168956R0600		50	11.00
7	**Busbars**	Busbars			BO3	1SNA164406R2400		1	
8	**Terminal block markers**	Blank card		White	RC65	1SNA232000R0000		1	3.60

Complete list of accessories is indicated in the terminal block datasheet.
Some accessories such as jumper bars may modify the terminal block's ratings: complete information in the accessories catalogue pages.

Technical data valid for copper conductors only.

1SNC161072S0201 - Rev. A

D4/6.LNTP screw clamp terminal blocks
Installation - 17.8 mm 0.701 in spacing

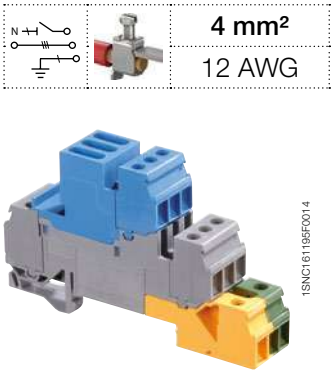

D4/6.LNTP

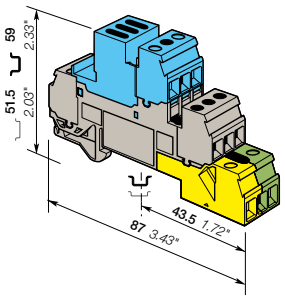

17.8 mm 0.701 in spacing

4 mm²	
12 AWG	

Description

- Closed terminal block: no end section needed,
- According to DIN 43880 standards (dimension above the rail 35 x 7.5 ≤ 44 mm),
- Compatible with busbar.

Ordering details

Description		Color	Type	Part Number		Pkg pce	Weight (1 pce) g
Installation	1 disconnect neutral + 3 feed-through + 1 ground	Blue, grey, green-yellow	D4/6.LNTP3	1SNA110269R1700		10	70.00

Main technical data

		IEC	UL	CSA
1 conductor per clamp	Rigid: Solid/Stranded	0.2-4 mm²	18-12 AWG	18-12 AWG
	Flexible without ferrule	0.2-4 mm²		
	Flexible with insulated ferrule			
	Gauge	A4		
Rated current / Rated cross section		30 A / 4 mm²	20 A / 12 AWG	20 A / 12 AWG
Rated short-time withstand current (1s)		480 A		
Rated voltage		320 V	300 V	300 V
Impulse withstand voltage		4000 V		
Protection		IP20	NEMA 1	

Mounting instructions

Rail	TH 35-7.5, TH 35-15
Wire stripping length	9.5 mm 0.37 in
Screw clamp Tool	Flat screwdriver Ø 4 mm Ø 0.157 in
Torque	0.5 - 0.8 N.m 4.4 - 7.1 lb.in
Disconnect device Tool	Flat screwdriver Ø 4 mm Ø 0.157 in
Torque	0.4 - 0.6 N.m 3.5 - 5.3 lb.in

The connecting capacity data for one Rigid: Solid/Stranded, or one Flexible conductor (when applicable) is a mandatory information required by IEC, UL and CSA standards (Copper conductors). All other data are provided as supplementary information only. For more details, please consult our CB, UL or CSA certificates and technical datasheet available on http://www.TE.com

CE RoHS USR CSA Gost R

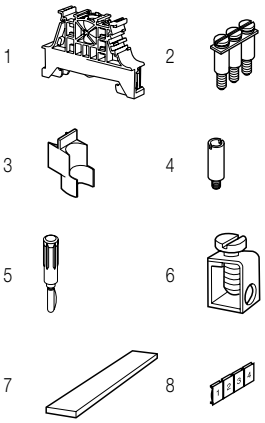

Accessories

	Description			Color	Type	Part Number		Pkg pce	Weight (1 pce) g
1	**End stops**	10 mm	0.394 in	Dark grey	BAM4	1SNK900001R0000		50	14.00
		5.2 mm	0.205 in		BAZ1	1SNK900002R0000		50	5.30
2	**Jumper bars**	2 poles	32 A		BJM62	1SNA173217R2600		10	2.00
		3 poles				1SNA173218R0700		10	3.00
		4 poles				1SNA173219R0000		10	4.00
		5 poles				1SNA173221R2200		10	5.00
		10 poles				1SNA173226R2700		10	10.00
3	**Circuit separators**	0 mm	0 in	White	SCD	1SNA103189R2600		10	1.00
		1.5 mm	0.059 in	Grey	SCFD	1SNA114117R0700		10	10.00
4	**Test sockets**	DIA 2 mm	0.079 in		AL2	1SNA167319R0600		50	
5	**Test plugs**	DIA 2 mm	0.079 in	Black	FC2	1SNA007865R2600		100	
6	**Clamps**	0.5-35 mm²			SFB1	1SNA163860R0500		50	12.00
		16-35 mm²	6-2 AWG		SFB2	1SNA168956R0600		50	11.00
7	**Busbars**	Busbars			BO3	1SNA164406R2400		1	
8	**Terminal block markers**	Blank card		White	RC65	1SNA232000R0000		1	3.60

Complete list of accessories is indicated in the terminal block datasheet.
Some accessories such as jumper bars may modify the terminal block's ratings: complete information in the accessories catalogue pages.

Technical data valid for copper conductors only.

D4/6.LNTP screw clamp terminal blocks
Installation - 17.8 mm 0.701 in spacing

4 mm²
12 AWG

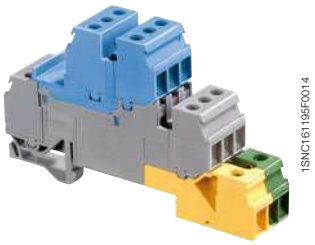

D4/6.LNTP

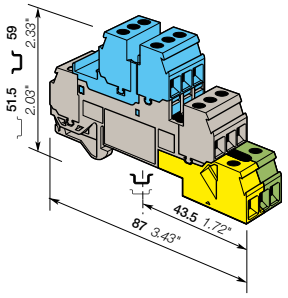

17.8 mm 0.701 in spacing

Description

- Closed terminal block: no end section needed,
- According to DIN 43880 standards (dimension above the rail 35 x 7.5 ≤ 44 mm),
- Compatible with busbar.

Ordering details

Description		Color	Type	Part Number		Pkg pce	Weight (1 pce) g
Installation	3 neutral + 3 feed-through + 3 ground	Blue, grey, Green-yellow	D4/6.LNTP2	1SNA110327R2100		10	70.00

Main technical data

		IEC	UL	CSA
1 conductor per clamp	Rigid: Solid/Stranded	0.2-4 mm²	18-12 AWG	18-12 AWG
	Flexible without ferrule	0.2-4 mm²		
	Flexible with insulated ferrule			
	Gauge	A4		
Rated current / Rated cross section		30 A / 4 mm²	20 A / 12 AWG	20 A / 12 AWG
Rated short-time withstand current (1s)		480 A		
Rated voltage		400 V	300 V	300 V
Impulse withstand voltage		6000 V		
Protection		IP20	NEMA 1	

Mounting instructions

Rail	TH 35-7.5, TH 35-15
Wire stripping length	9.5 mm 0.37 in
Tool	Flat screwdriver Ø 4 mm Ø 0.157 in
Torque	0.5 - 0.8 N.m 4.4 - 7.1 lb.in

The connecting capacity data for one Rigid: Solid/Stranded, or one Flexible conductor (when applicable) is a mandatory information required by IEC, UL and CSA standards (Copper conductors). All other data are provided as supplementary information only. For more details, please consult our CB, UL or CSA certificates and technical datasheet available on http://www.TE.com

CE RoHS USR CSA Gost R

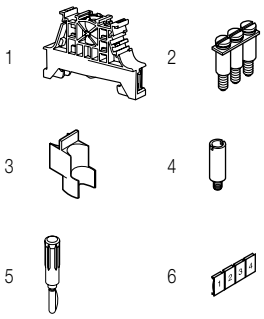

Accessories

	Description			Color	Type	Part Number		Pkg pce	Weight (1 pce) g
1	**End stops**	10 mm	0.394 in	Dark grey	BAM4	1SNK900001R0000		50	14.00
		5.2 mm	0.205 in		BAZ1	1SNK900002R0000		50	5.30
2	**Jumper bars**	2 poles	32 A		BJM62	1SNA173217R2600		10	2.00
		3 poles				1SNA173218R0700		10	3.00
		4 poles				1SNA173219R0000		10	4.00
		5 poles				1SNA173221R2200		10	5.00
		10 poles				1SNA173226R2700		10	10.00
3	**Circuit separators**	0 mm	0 in	White	SCD	1SNA103189R2600		10	1.00
		1.5 mm	0.059 in	Grey	SCFD	1SNA114117R0700		10	10.00
4	**Test sockets**	DIA 2 mm	0.079 in		AL2	1SNA167319R0600		50	
5	**Test plugs**	DIA 2 mm	0.079 in	Black	FC2	1SNA007865R2600		100	
6	**Terminal block markers**	Blank card		White	RC65	1SNA232000R0000		1	3.60

Complete list of accessories is indicated in the terminal block datasheet.
Some accessories such as jumper bars may modify the terminal block's ratings: complete information in the accessories catalogue pages.

Technical data valid for copper conductors only.

1SNC161074S0201 - Rev. A

D4/6.LNTP screw clamp terminal blocks
Installation - 17.8 mm 0.701 in spacing

4 mm²
12 AWG

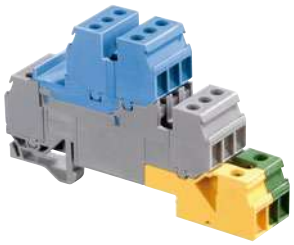

D4/6.LNTP

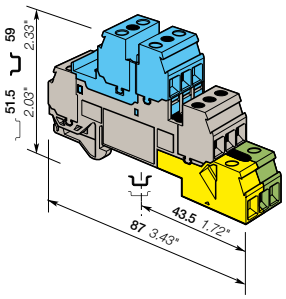

17.8 mm 0.701 in spacing

Description

- Closed terminal block: no end section needed.
- According to DIN 43880 standards (dimension above the rail 35 x 7.5 ≤ 44 mm),
- Compatible with busbar.

Ordering details

Description		Color	Type	Part Number		Pkg pce	Weight (1 pce) g
Installation	1 neutral + 3 feed-through + 1 ground	Blue, Grey, Green-Yellow	D4/6.LNTP8	1SNA110333R2700		10	60.00

Main technical data

		IEC	UL	CSA
1 conductor per clamp	Rigid: Solid/Stranded	0.2-4 mm²	18-12 AWG	18-12 AWG
	Flexible without ferrule	0.2-4 mm²		
	Flexible with insulated ferrule			
	Gauge	A4		
Rated current / Rated cross section		30 A / 4 mm²	20 A / 12 AWG	20 A / 12 AWG
Rated short-time withstand current (1s)		480 A		
Rated voltage		400 V	300 V	300 V
Impulse withstand voltage		6000 V		
Protection		IP20	NEMA 1	

Mounting instructions

Rail	TH 35-7.5, TH 35-15
Wire stripping length	9.5 mm 0.37 in
Tool	Flat screwdriver Ø 4 mm Ø 0.157 in
Torque	0.4 - 0.8 N.m 3.5 - 7 lb.in

The connecting capacity data for one Rigid: Solid/Stranded, or one Flexible conductor (when applicable) is a mandatory information required by IEC, UL and CSA standards (Copper conductors). All other data are provided as supplementary information only. For more details, please consult our CB, UL or CSA certificates and technical datasheet available on http://www.TE.com

CE RoHS USR CNR CSA Gost R

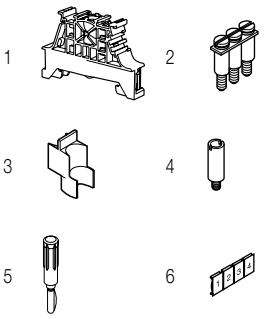

Accessories

	Description			Color	Type	Part Number		Pkg pce	Weight (1 pce) g
1	**End stops**	10 mm	0.394 in	Dark grey	BAM4	1SNK900001R0000		50	14.00
		5.2 mm	0.205 in		BAZ1	1SNK900002R0000		50	5.30
2	**Jumper bars**	2 poles	32 A	Grey	BJM62	1SNA173217R2600		10	2.00
		3 poles				1SNA173218R0700		10	3.00
		4 poles				1SNA173219R0000		10	4.00
		5 poles				1SNA173221R2200		10	5.00
		10 poles				1SNA173226R2700		10	10.00
3	**Circuit separators**	0 mm	0 in	White	SCD	1SNA103189R2600		10	1.00
		1.5 mm	0.059 in	Grey	SCFD	1SNA114117R0700		10	10.00
4	**Test sockets**	DIA 2 mm	0.079 in		AL2	1SNA167319R0600		50	
5	**Test plugs**	DIA 2 mm	0.079 in	Black	FC2	1SNA007865R2600		100	
6	**Terminal block markers**	Blank card		White	RC65	1SNA232000R0000		1	3.60

Complete list of accessories is indicated in the terminal block datasheet.
Some accessories such as jumper bars may modify the terminal block's ratings: complete information in the accessories catalogue pages.

Technical data valid for copper conductors only.

D4/6.LNTP screw clamp terminal blocks
Installation - 17.8 mm 0.701 in spacing

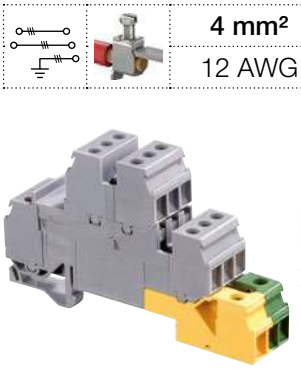

D4/6.LNTP

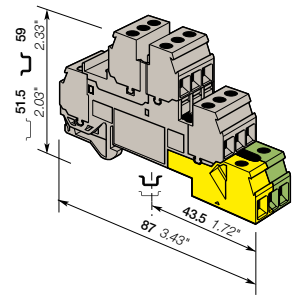

17.8 mm 0.701 in spacing

	4 mm²
	12 AWG

Description

- Closed terminal block: no end section needed,
- According to DIN 43880 standards (dimension above the rail 35 x 7.5 ≤ 44 mm),
- Compatible with busbar.

Ordering details

Description		Color	Type	Part Number		Pkg pce	Weight (1 pce) g
Installation	6 feed-through + 3 ground	Grey, Green-yellow	D4/6.LNTP4	1SNA110328R0200		10	70.00

Main technical data

		IEC	UL	CSA
1 conductor per clamp	Rigid: Solid/Stranded	0.2-4 mm²	18-12 AWG	18-12 AWG
	Flexible without ferrule	0.2-4 mm²		
	Flexible with insulated ferrule			
	Gauge	A4		
Rated current / Rated cross section		30 A / 4 mm²	20 A / 12 AWG	20 A / 12 AWG
Rated short-time withstand current (1s)		480 A		
Rated voltage		400 V	300 V	300 V
Impulse withstand voltage		6000 V		
Protection		IP20	NEMA 1	

Mounting instructions

Rail	TH 35-7.5, TH 35-15
Wire stripping length	9.5 mm 0.37 in
Tool	Flat screwdriver Ø 4 mm Ø 0.157 in
Torque	0.5 - 0.8 N.m 4.4 - 7.1 lb.in

The connecting capacity data for one Rigid: Solid/Stranded, or one Flexible conductor (when applicable) is a mandatory information required by IEC, UL and CSA standards (Copper conductors). All other data are provided as supplementary information only. For more details, please consult our CB, UL or CSA certificates and technical datasheet available on http://www.TE.com

CE RoHS USR CSA Gost R

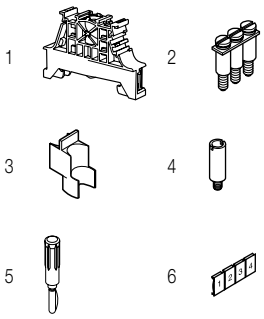

Accessories

	Description			Color	Type	Part Number		Pkg pce	Weight (1 pce) g
1	**End stops**	10 mm	0.394 in	Dark grey	BAM4	1SNK900001R0000		50	14.00
		5.2 mm	0.205 in		BAZ1	1SNK900002R0000		50	5.30
2	**Jumper bars**	2 poles	32 A		BJM62	1SNA173217R2600		10	2.00
		3 poles				1SNA173218R0700		10	3.00
		4 poles				1SNA173219R0000		10	4.00
		5 poles				1SNA173221R2200		10	5.00
		10 poles				1SNA173226R2700		10	10.00
3	**Circuit separators**	0 mm	0 in	White	SCD	1SNA103189R2600		10	1.00
		1.5 mm	0.059 in	Grey	SCFD	1SNA114117R0700		10	10.00
4	**Test sockets**	DIA 2 mm	0.079 in		AL2	1SNA167319R0600		50	
5	**Test plugs**	DIA 2 mm	0.079 in	Black	FC2	1SNA007865R2600		100	
6	**Terminal block markers**	Blank card		White	RC65	1SNA232000R0000		1	3.60

Complete list of accessories is indicated in the terminal block datasheet.
Some accessories such as jumper bars may modify the terminal block's ratings: complete information in the accessories catalogue pages.

Technical data valid for copper conductors only.

1SNC161080S0201 - Rev. A

D4/6.LNTP screw clamp terminal blocks
Installation - 17.8 mm 0.701 in spacing

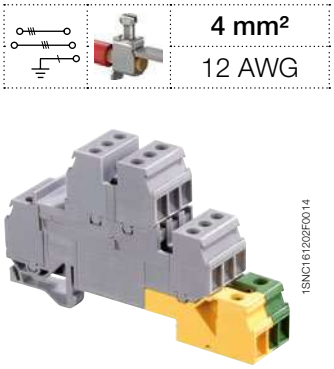

D4/6.LNTP

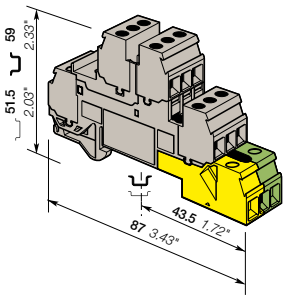

17.8 mm 0.701 in spacing

4 mm²
12 AWG

Description

- Closed terminal block: no end section needed,
- According to DIN 43880 standards (dimension above the rail 35 x 7.5 ≤ 44 mm),
- Compatible with busbar.

Ordering details

Description		Color	Type	Part Number		Pkg pce	Weight (1 pce) g
Installation	6 feed-through + 1 ground	Grey, Green-yellow	D4/6.LNTP7	1SNA110332R2600		10	60.00

Main technical data

		IEC	UL	CSA
1 conductor per clamp	Rigid: Solid/Stranded	0.2-4 mm²	18-12 AWG	18-12 AWG
	Flexible without ferrule	0.2-4 mm²		
	Flexible with insulated ferrule			
	Gauge	A4		
Rated current / Rated cross section		30 A / 4 mm²	20 A / 12 AWG	20 A / 12 AWG
Rated short-time withstand current (1s)		480 A		
Rated voltage		400 V	300 V	300 V
Impulse withstand voltage		6000 V		
Protection		IP20	NEMA 1	

Mounting instructions

Rail	TH 35-7.5, TH 35-15
Wire stripping length	9.5 mm 0.37 in
Tool	Flat screwdriver Ø 4 mm Ø 0.157 in
Torque	0.4 - 0.8 N.m 3.5 - 7 lb.in

The connecting capacity data for one Rigid: Solid/Stranded, or one Flexible conductor (when applicable) is a mandatory information required by IEC, UL and CSA standards (Copper conductors). All other data are provided as supplementary information only. For more details, please consult our CB, UL or CSA certificates and technical datasheet available on http://www.TE.com

CE RoHS USR CNR CSA Gost R

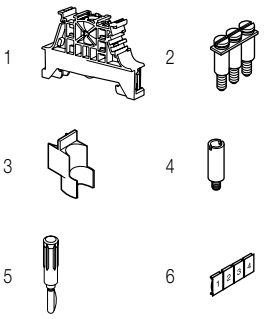

Accessories

	Description			Color	Type	Part Number		Pkg pce	Weight (1 pce) g
1	**End stops**	10 mm	0.394 in	Dark grey	BAM4	1SNK900001R0000		50	14.00
		5.2 mm	0.205 in		BAZ1	1SNK900002R0000		50	5.30
2	**Jumper bars**	2 poles	32 A		BJM62	1SNA173217R2600		10	2.00
		3 poles				1SNA173218R0700		10	3.00
		4 poles				1SNA173219R0000		10	4.00
		5 poles				1SNA173221R2200		10	5.00
		10 poles				1SNA173226R2700		10	10.00
3	**Circuit separators**	0 mm	0 in	White	SCD	1SNA103189R2600		10	1.00
		1.5 mm	0.059 in	Grey	SCFD	1SNA114117R0700		10	10.00
4	**Test sockets**	DIA 2 mm	0.079 in		AL2	1SNA167319R0600		50	
5	**Test plugs**	DIA 2 mm	0.079 in	Black	FC2	1SNA007865R2600		100	
6	**Terminal block markers**	Blank card		White	RC65	1SNA232000R0000		1	3.60

Complete list of accessories is indicated in the terminal block datasheet.
Some accessories such as jumper bars may modify the terminal block's ratings: complete information in the accessories catalogue pages.

Technical data valid for copper conductors only.

1SNC161082S0201 - Rev. A

D4/6.LNTP screw clamp terminal blocks
Installation - 17.8 mm 0.701 in spacing

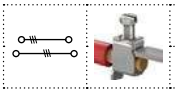

4 mm²
12 AWG

D4/6.LNTP

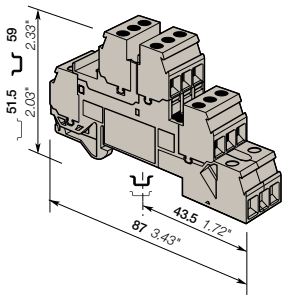

17.8 mm 0.701 in spacing

Description
- Closed terminal block: no end section needed,
- According to DIN 43880 standards (dimension above the rail 35 x 7.5 ≤ 44 mm),
- Compatible with busbar.

Ordering details

Description		Color	Type	Part Number		Pkg pce	Weight (1 pce) g
Installation	6 feed-through	Grey	D4/6.LNTP6	1SNA110331R2500		10	63.10

Main technical data

		IEC	UL	CSA
1 conductor per clamp	Rigid: Solid/Stranded	0.2-4 mm²	18-12 AWG	18-12 AWG
	Flexible without ferrule	0.2-4 mm²		
	Flexible with insulated ferrule			
	Gauge	A4		
Rated current / Rated cross section		30 A / 4 mm²	20 A / 12 AWG	20 A / 12 AWG
Rated short-time withstand current (1s)		480 A		
Rated voltage		400 V	300 V	300 V
Impulse withstand voltage		6000 V		
Protection		IP20	NEMA 1	

The connecting capacity data for one Rigid: Solid/Stranded, or one Flexible conductor (when apply) is a mandatory information required by IEC, UL and CSA standards (Copper conductors). All other data are provided as supplementary information only. For more details, please consult our CB, UL or CSA certificates and technical datasheet available on http://www.TE.com

CE RoHS USR CNR CSA Gost R

Mounting instructions

Rail	TH 35-7.5, TH 35-15
Wire stripping length	9.5 mm 0.37 in
Tool	Flat screwdriver Ø 4 mm Ø 0.157 in
Torque	0.4 - 0.8 N.m 3.5 - 7 lb.in

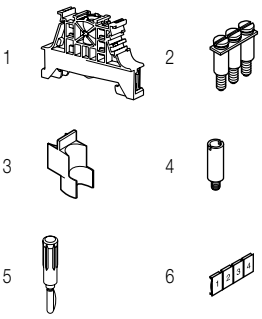

Accessories

	Description			Color	Type	Part Number		Pkg pce	Weight (1 pce) g
1	End stops	10 mm	0.394 in	Dark grey	BAM4	1SNK900001R0000		50	14.00
		5.2 mm	0.205 in		BAZ1	1SNK900002R0000		50	5.30
2	Jumper bars	2 poles	32 A		BJM62	1SNA173217R2600		10	2.00
		3 poles				1SNA173218R0700		10	3.00
		4 poles				1SNA173219R0000		10	4.00
		5 poles				1SNA173221R2200		10	5.00
		10 poles				1SNA173226R2700		10	10.00
3	Circuit separators	0 mm	0 in	White	SCD	1SNA103189R2600		10	1.00
		1.5 mm	0.059 in	Grey	SCFD	1SNA114117R0700		10	10.00
4	Test sockets	DIA 2 mm	0.079 in		AL2	1SNA167319R0600		50	
5	Test plugs	DIA 2 mm	0.079 in	Black	FC2	1SNA007865R2600		100	
6	Terminal block markers	Blank card		White	RC65	1SNA232000R0000		1	3.60

Complete list of accessories is indicated in the terminal block datasheet.
Some accessories such as jumper bars may modify the terminal block's ratings: complete information in the accessories catalogue pages.

Technical data valid for copper conductors only.

1SNC161083S0201 - Rev. A

D4/6.A.NTLP screw clamp terminal blocks
Installation - 6 mm 0.236 in spacing

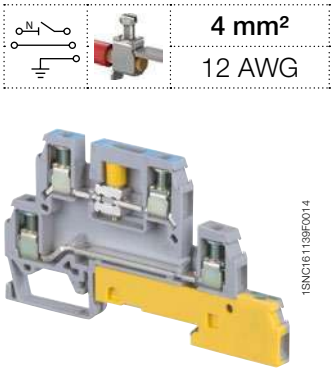

D4/6.A.NTLP

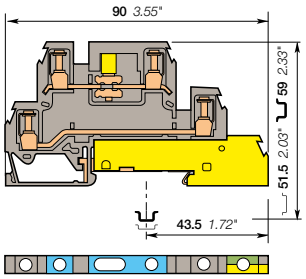

6 mm 0.236 in spacing

4 mm²
12 AWG

Description

According to DIN 43880 standards (dimension above the rail 35 x 7.5 ≤ 44 mm).

Ordering details

Description		Color	Type	Part Number		Pkg pce	Weight (1 pce) g
Installation	Disconnect neutral + feed-through + ground	Grey, blue, Green-yellow	D4/6.A.NTLP	1SNA110415R1200		10	

Main technical data

		IEC	UL	CSA
1 conductor per clamp	Rigid: Solid/Stranded	0.2-4 mm²	18-12 AWG	
	Flexible without ferrule	0.2-4 mm²		
	Flexible with insulated ferrule			
	Gauge	A4		
Rated current / Rated cross section		30 A / 4 mm²	20 A / 12 AWG	
Rated short-time withstand current (1s)		480 A		
Rated voltage		320 V	300 V	
Impulse withstand voltage		4000 V		
Protection		IP20	NEMA 1	

Mounting instructions

Rail		G32, TH 35-7.5, TH 35-15
Wire stripping length		9.5 mm 0.37 in
Screw clamp Tool		Flat screwdriver Ø 4 mm Ø 0.157 in
Torque		0.4 - 0.8 Nm 3.5 - 7 lb.in
Disconnect device Tool		Flat screwdriver Ø 4 mm Ø 0.157 in
Torque		0.4 - 0.6 N.m 3.5 - 5.3 lb.in

The connecting capacity data for one Rigid: Solid/Stranded, or one Flexible conductor (when applicable) is a mandatory information required by IEC, UL and CSA standards (Copper conductors). All other data are provided as supplementary information only. For more details, please consult our CB, UL or CSA certificates and technical datasheet available on http://www.TE.com

CE RoHS USR CNR Gost R

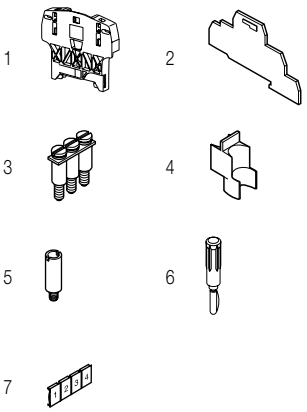

Accessories

	Description			Color	Type	Part Number		Pkg pce	Weight (1 pce) g
1	End stops	10 mm	0.394 in	Dark grey	BAZH1	1SNK900102R0000		20	24.00
2	End sections	1 mm	0.039 in	Grey	FEDA6	1SNA116965R1300		20	3.00
3	Jumper bars	2 poles	32 A		BJM62	1SNA173217R2600		10	2.00
		3 poles				1SNA173218R0700		10	3.00
		4 poles				1SNA173219R0000		10	4.00
		5 poles				1SNA173221R2200		10	5.00
		10 poles				1SNA173226R2700		10	10.00
4	Circuit separators	0 mm	0 in	White	SCD	1SNA103189R2600		10	1.00
		1.5 mm	0.059 in	Grey	SCFD	1SNA114117R0700		10	10.00
5	Test sockets	DIA 2 mm	0.079 in		AL2	1SNA167319R0600		50	
6	Test plugs	DIA 2 mm	0.079 in	Black	FC2	1SNA007865R2600		100	
7	Terminal block markers	Blank card		White	RC65	1SNA232000R0000		1	3.60

Complete list of accessories is indicated in the terminal block datasheet.
Some accessories such as jumper bars may modify the terminal block's ratings: complete information in the accessories catalogue pages.

Technical data valid for copper conductors only.

D4/6.A.LL screw clamp terminal blocks
Installation - 6 mm 0.236 in spacing

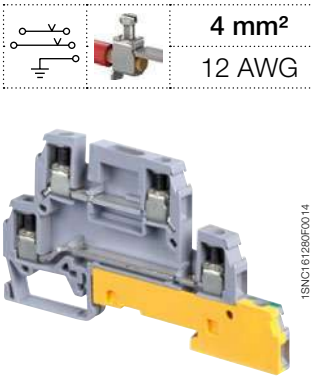

D4/6.A.LL

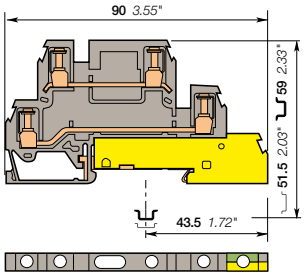

6 mm 0.236 in spacing

	4 mm²
	12 AWG

Description

According to DIN 43880 standards (dimension above the rail 35 x 7.5 ≤ 44 mm).

Ordering details

Description		Color	Type	Part Number		Pkg pce	Weight (1 pce) g
Installation	2 feed-through + ground	Grey, Green-yellow	D4/6.A.LLP	1SNA110418R2500		20	20.00

Main technical data

		IEC	UL	CSA
1 conductor per clamp	Rigid: Solid/Stranded	0.2-4 mm²	18-12 AWG	
	Flexible without ferrule	0.2-4 mm²		
	Flexible with insulated ferrule			
	Gauge	A4		
Rated current / Rated cross section		30 A / 4 mm²	20 A / 12 AWG	
Rated short-time withstand current (1s)		480 A		
Rated voltage		400 V	300 V	
Impulse withstand voltage		6000 V		
Protection		IP20	NEMA 1	

Mounting instructions

Rail		G32, TH 35-7.5, TH 35-15
Wire stripping length		9.5 mm 0.37 in
Screw clamp Tool		Flat screwdriver Ø 4 mm Ø 0.157 in
Torque		0.4 - 0.8 Nm 3.5 - 7 lb.in
Disconnect device Tool		
Torque		

The connecting capacity data for one Rigid: Solid/Stranded, or one Flexible conductor (when applicable) is a mandatory information required by IEC, UL and CSA standards (Copper conductors). All other data are provided as supplementary information only. For more details, please consult our CB, UL or CSA certificates and technical datasheet available on http://www.TE.com

CE RoHS USR CNR Gost R

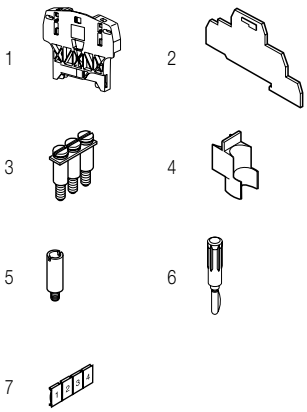

Accessories

	Description			Color	Type	Part Number		Pkg pce	Weight (1 pce) g
1	End stops	10 mm	0.394 in	Dark grey	BAZH1	1SNK900102R0000		20	24.00
2	End sections	1 mm	0.039 in	Grey	FEDA6	1SNA116965R1300		20	3.60
3	Jumper bars	2 poles	32 A		BJM62	1SNA173217R2600		10	2.00
		3 poles				1SNA173218R0700		10	3.00
		4 poles				1SNA173219R0000		10	4.00
		5 poles				1SNA173221R2200		10	5.00
		10 poles				1SNA173226R2700		10	10.00
4	Circuit separators	0 mm	0 in	White	SCD	1SNA103189R2600		10	1.00
		1.5 mm	0.059 in	Grey	SCFD	1SNA114117R0700		10	10.00
5	Test sockets	DIA 2 mm	0.079 in		AL2	1SNA167319R0600		50	
6	Test plugs	DIA 2 mm	0.079 in	Black	FC2	1SNA007865R2600		100	
7	Terminal block markers	Blank card		White	RC65	1SNA232000R0000		1	3.60

Complete list of accessories is indicated in the terminal block datasheet.
Some accessories such as jumper bars may modify the terminal block's ratings: complete information in the accessories catalogue pages.

Technical data valid for copper conductors only.

1SNC161129S0201 - Rev. A

MA2.5/5.NT screw clamp terminal blocks

Neutral disconnect - 5 mm 0.197 in spacing

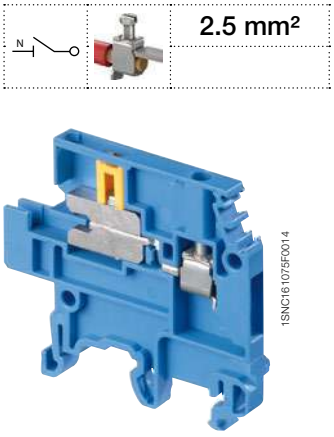

MA2.5/5.NT

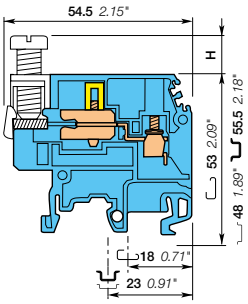

5 mm 0.197 in spacing

Description

- Ease the disconnection of your neutral circuits,
- Compatible with screw clamp terminal blocks, wire size 2.5 mm² (5 mm 0.200 in spacing) to 16 mm² (12 mm 0.473 in spacing).

Ordering details

Description		Color	Type	Part Number		Pkg pce	Weight (1 pce) g
Neutral disconnect	For busbar 10 x 3 mm	Blue	MA2.5/5.NT	1SNA125487R0600		50	12.00

Main technical data

		IEC	UL	CSA
1 conductor per clamp	Rigid: Solid/Stranded	0.2-4 mm²		
	Flexible without ferrule	0.22-2.5 mm²		
	Flexible with insulated ferrule			
	Gauge	A3		
Rated current / Rated cross section		24 A / 2.5 mm²		
Rated short-time withstand current (1s)		300 A		
Rated voltage		400 V		
Impulse withstand voltage		6000 V		
Protection			NEMA	

Mounting instructions

Rail		G32, TH 35-7.5, TH 35-15
Wire stripping length		10 mm 0.39 in
Screw clamp Tool		Flat screwdriver Ø 3.5 mm Ø 0.14 in
Torque		0.4 - 0.6 N.m 3.5 - 5.3 lb.in
Disconnect device Tool		Flat screwdriver Ø 4 mm Ø 0.16 in
Torque		0.4 - 0.6 N.m 3.5 - 5.3 lb.in

The connecting capacity data for one Rigid: Solid/Stranded, or one Flexible conductor (when applicable) is a mandatory information required by IEC, UL and CSA standards (Copper conductors). All other data are provided as supplementary information only. for more details, please consult our CB, UL or CSA certificates and technical datasheet available on http://www.TE.com

CE RoHS Gost R

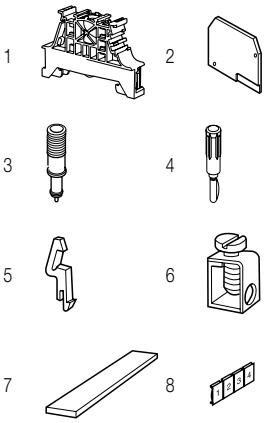

Accessories

	Description			Color	Type	Part Number		Pkg pce	Weight (1 pce) g
1	End stops	10 mm	0.394 in	Dark grey	BAM4	1SNK900001R0000		50	14.00
		5.2 mm	0.205 in		BAZ1	1SNK900002R0000		50	5.30
2	End sections	2.8 mm	0.110 in	Grey	FEM6	1SNA118368R1600		20	2.40
3	Test adapters			Green	DCV	1SNA173058R0200		10	2.20
4	Test plugs	DIA 2 mm 0.079 in		Black	FC2	1SNA007865R2600		100	
5	Locking devices	For busbar BO3		Blue	VRB3	1SNA128035R1600		10	
6	Clamps	0.5-35 mm² 18-2 AWG			SFB1	1SNA163860R0500		50	12.00
		16-35 mm² 6-2 AWG			SFB2	1SNA168956R0600		50	11.00
7	Busbars	Busbars			BO3	1SNA164406R2400		1	
8	Terminal block markers	Blank card		White	RC510	1SNA231000R0700		1	5.20

Complete list of accessories is indicated in the terminal block datasheet.
Some accessories such as jumper bars may modify the terminal block's ratings: complete information in the accessories catalogue pages.

Technical data valid for copper conductors only

M4/6.NT screw clamp terminal blocks

Neutral disconnect - 6 mm 0.236 in spacing

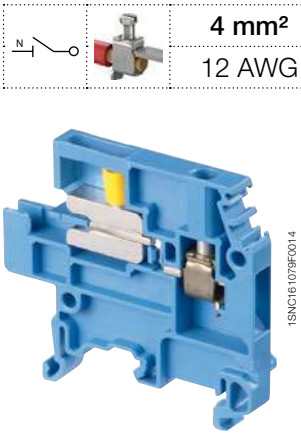

M4/6.NT

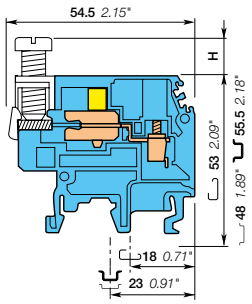

6 mm 0.236 in spacing

	4 mm²
	12 AWG

Description

- Ease the disconnection of your neutral circuits,
- Compatible with screw clamp terminal blocks, wire size 2.5 mm² (5 mm 0.200 in spacing) to 16 mm² (12 mm 0.473 in spacing).

Ordering details

Description		Color	Type	Part Number		Pkg pce	Weight (1 pce) g
Neutral disconnect	For busbar 10 x 3 mm	Blue	M4/6.NT	1SNA125117R0200		50	13.00

Main technical data

		IEC	UL	CSA
1 conductor per clamp	Rigid: Solid/Stranded	0.2-4 mm²		18-12 AWG
	Flexible without ferrule	0.22-4 mm²		
	Flexible with insulated ferrule			
	Gauge	A4		
Rated current / Rated cross section		32 A / 4 mm²		25 A / 12 AWG
Rated short-time withstand current (1s)		480 A		
Rated voltage		400 V		300 V
Impulse withstand voltage		6000 V		
Protection			NEMA	

Mounting instructions

Rail	G32, TH 35-7.5, TH 35-15
Wire stripping length	12 mm 0.47 in
Screw clamp Tool	Flat screwdriver Ø 4 mm Ø 0.157 in
Torque	0.5 - 0.8 N.m 4.4 - 7.1 lb.in
Disconnect device Tool	Flat screwdriver Ø 4 mm Ø 0.157 in
Torque	0.4 - 0.6 N.m 3.5 - 5.3 lb.in

The connecting capacity data for one Rigid: Solid/Stranded, or one Flexible conductor (when applicable) is a mandatory information required by IEC, UL and CSA standards (Copper conductors). All other data are provided as supplementary information only. For more details, please consult our CB, UL or CSA certificates and technical datasheet available on http://www.TE.com

CE RoHS CSA Gost R

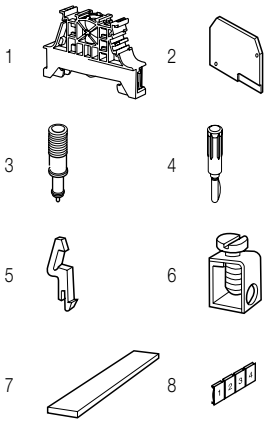

Accessories

	Description			Color	Type	Part Number		Pkg pce	Weight (1 pce) g
1	**End stops**	10 mm	0.394 in	Dark grey	BAM4	1SNK900001R0000		50	14.00
		5.2 mm	0.205 in		BAZ1	1SNK900002R0000		50	5.30
2	**End sections**	2.8 mm	0.110 in	Grey	FEM6	1SNA118368R1600		20	2.40
3	**Test adapters**			Green	DCV	1SNA173058R0200		10	2.20
4	**Test plugs**	DIA 2 mm 0.079 in		Black	FC2	1SNA007865R2600		100	
5	**Locking devices**	For busbar BO3		Blue	VRB3	1SNA128035R1600		10	
6	**Clamps**	0.5-35 mm² 18-2 AWG			SFB1	1SNA163860R0500		50	12.00
		16-35 mm² 6-2 AWG			SFB2	1SNA168956R0600		50	11.00
7	**Busbars**	Busbars			BO3	1SNA164406R2400		1	
8	**Terminal block markers**	Blank card		White	RC610	1SNA233000R0100		1	7.50

Complete list of accessories is indicated in the terminal block datasheet.
Some accessories such as jumper bars may modify the terminal block's ratings: complete information in the accessories catalogue pages.

Technical data valid for copper conductors only.

1SNC161087S0201 - Rev. A

M6/8.NT screw clamp terminal blocks

Neutral disconnect - 8 mm 0.315 in spacing

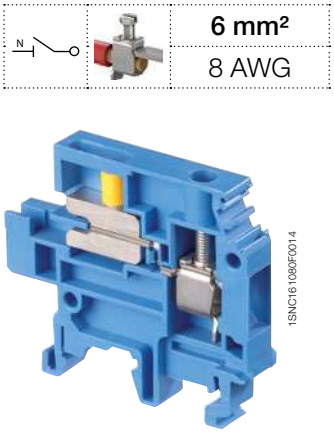

6 mm²
8 AWG

M6/8.NT

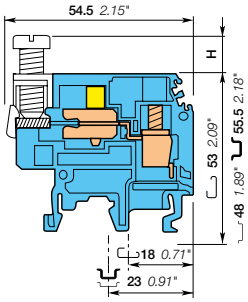

8 mm 0.315 in spacing

Description

- Ease the disconnection of your neutral circuits,
- Compatible with screw clamp terminal blocks, wire size 2.5 mm² (5 mm 0.200 in spacing) to 16 mm² (12 mm 0.473 in spacing).

Ordering details

Description		Color	Type	Part Number		Pkg pce	Weight (1 pce) g
Neutral disconnect	For busbar 10 x 3 mm	Blue	M6/8.NT	1SNA125119R1400		50	17.00

Main technical data

		IEC	UL	CSA
1 conductor per clamp	Rigid: Solid/Stranded	0.5-10 mm²		18-8 AWG
	Flexible without ferrule	0.5-6 mm²		
	Flexible with insulated ferrule			
	Gauge	A5		
Rated current / Rated cross section		41 A / 6 mm²		50 A / 8 AWG
Rated short-time withstand current (1s)		720 A		
Rated voltage		400 V		300 V
Impulse withstand voltage		6000 V		
Protection			NEMA	

Mounting instructions

Rail		G32, TH 35-7.5, TH 35-15
Wire stripping length		12 mm 0.47 in
Screw clamp Tool		Flat screwdriver Ø 4-5 mm Ø 0.16-0.20 in
Torque		0.8 - 1 N.m 7.1 - 8.9 lb.in
Disconnect device Tool		Flat screwdriver Ø 4 mm Ø 0.16 in
Torque		0.4 - 0.6 N.m 3.5 - 5.3 lb.in

The connecting capacity data for one Rigid: Solid/Stranded, or one Flexible conductor (when applicable) is a mandatory information required by IEC, UL and CSA standards (Copper conductors). All other data are provided as supplementary information only. for more details, please consult our CB, UL or CSA certificates and technical datasheet available on http://www.TE.com

CE RoHS CSA Gost R

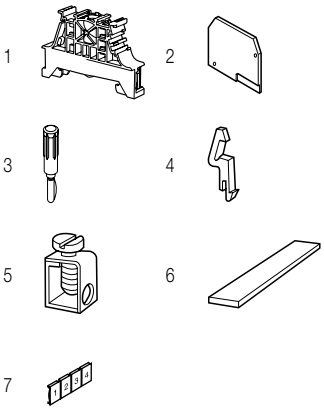

Accessories

	Description			Color	Type	Part Number		Pkg pce	Weight (1 pce) g
1	End stops	10 mm	0.394 in	Dark grey	BAM4	1SNK900001R0000		50	14.00
		5.2 mm	0.205 in		BAZ1	1SNK900002R0000		50	5.30
2	End sections	2.8 mm	0.110 in	Grey	FEM6	1SNA118368R1600		20	2.40
3	Test plugs	DIA 2 mm	0.079 in	Black	FC2	1SNA007865R2600		100	
4	Locking devices	For busbar BO3		Blue	VRB3	1SNA128035R1600		10	
5	Clamps	0.5-35 mm²	18-2 AWG		SFB1	1SNA163860R0500		50	12.00
		16-35 mm²	6-2 AWG		SFB2	1SNA168956R0600		50	11.00
6	Busbars	Busbars			BO3	1SNA164406R2400		1	
7	Terminal block markers	Blank card		White	RC810	1SNA234000R0200		1	8.20

Complete list of accessories is indicated in the terminal block datasheet.
Some accessories such as jumper bars may modify the terminal block's ratings: complete information in the accessories catalogue pages.

Technical data valid for copper conductors only

M10/10.NT screw clamp terminal blocks

Neutral disconnect - 10 mm 0.394 in spacing

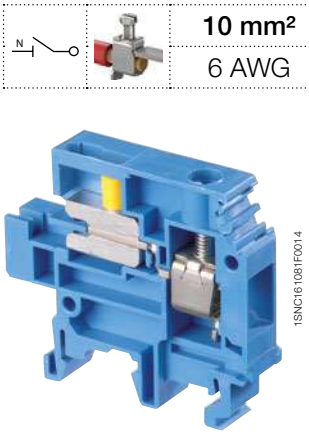

M10/10.NT

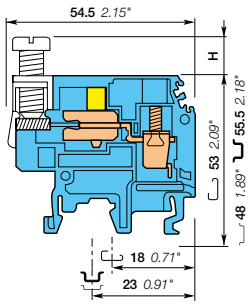

10 mm 0.394 in spacing

10 mm²	6 AWG

Description

- Ease the disconnection of your neutral circuits,
- Compatible with screw clamp terminal blocks, wire size 2.5 mm² (5 mm 0.200 in spacing) to 16 mm² (12 mm 0.473 in spacing).

Ordering details

Description		Color	Type	Part Number		Pkg pce	Weight (1 pce) g
Neutral disconnect	For busbar 10 x 3 mm	Blue	M10/10.NT	1SNA125121R0600		50	19.00

Main technical data

		IEC	UL	CSA
1 conductor per clamp	Rigid: Solid/Stranded	0.5-16 mm²		18-6 AWG
	Flexible without ferrule	0.5-10 mm²		
	Flexible with insulated ferrule			
	Gauge	B6		
Rated current / Rated cross section		57 A / 10 mm²		75 A / 6 AWG
Rated short-time withstand current (1s)		1200 A		
Rated voltage		400 V		300 V
Impulse withstand voltage		6000 V		
Protection			NEMA	

Mounting instructions

Rail	G32, TH 35-7.5, TH 35-15
Wire stripping length	12 mm 0.47 in
Screw clamp Tool	Flat screwdriver Ø 5.5-6 mm Ø 0.22-0.24 in
Torque	1.2 - 1.4 N.m 10.6 - 12.3 lb.in
Disconnect device Tool	Flat screwdriver Ø 4 mm Ø 0.16 in
Torque	0.4 - 0.6 N.m 3.5 - 5.3 lb.in

The connecting capacity data for one Rigid: Solid/Stranded, or one Flexible conductor (when applicable) is a mandatory information required by IEC, UL and CSA standards (Copper conductors). All other data are provided as supplementary information only. For more details, please consult our CB, UL or CSA certificates and technical datasheet available on http://www.TE.com

CE RoHS CSA Gost R

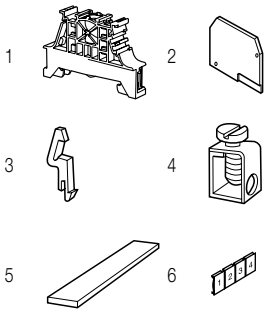

Accessories

	Description			Color	Type	Part Number		Pkg pce	Weight (1 pce) g
1	**End stops**	10 mm	0.394 in	Dark grey	BAM4	1SNK900001R0000		50	14.00
		5.2 mm	0.205 in		BAZ1	1SNK900002R0000		50	5.30
2	**End sections**	2.8 mm	0.110 in	Grey	FEM6	1SNA118368R1600		20	2.40
3	**Locking devices**	For busbar BO3		Blue	VRB3	1SNA128035R1600		10	
4	**Clamps**	0.5-35 mm² 18-2 AWG			SFB1	1SNA163860R0500		50	12.00
		16-35 mm² 6-2 AWG			SFB2	1SNA168956R0600		50	11.00
5	**Busbars**	Busbars			BO3	1SNA164406R2400		1	
6	**Terminal block markers**	Blank card		White	RC1010	1SNA238000R1600		1	1.30

Complete list of accessories is indicated in the terminal block datasheet.
Some accessories such as jumper bars may modify the terminal block's ratings: complete information in the accessories catalogue pages.

Technical data valid for copper conductors only

1SNC161089S0201 - Rev. A

M16/12.NT screw clamp terminal blocks

Neutral disconnect - 12 mm 0.472 in spacing

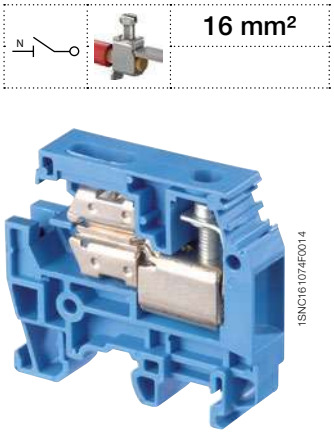

M16/12.NT

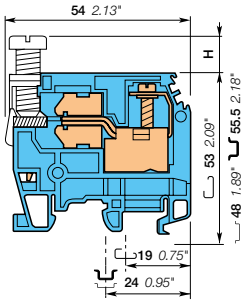

12 mm 0.472 in spacing

Description

- Ease the disconnection of your neutral circuits,
- Compatible with screw clamp terminal blocks, wire size 2.5 mm² (5 mm 0.200 in spacing) to 16 mm² (12 mm 0.473 in spacing).

Ordering details

Description		Color	Type	Part Number		Pkg pce	Weight (1 pce) g
Neutral disconnect	For busbar 10 x 3 mm	Blue	M16/12.NT1	1SNA125593R0000		20	26.00

Main technical data

		IEC	UL	CSA
1 conductor per clamp	Rigid: Solid/Stranded	2.5-25 mm²		
	Flexible without ferrule	2.5-16 mm²		
	Flexible with insulated ferrule			
	Gauge	B7		
Rated current / Rated cross section		76 A / 16 mm²		
Rated short-time withstand current (1s)		1920 A		
Rated voltage		400 V		
Impulse withstand voltage		6000 V		
Protection			NEMA	

Mounting instructions

Rail		G32, TH 35-7.5, TH 35-15
Wire stripping length		14 mm 0.51 in
Screw clamp Tool		Flat screwdriver Ø 5.5 mm Ø 0.22 in
Torque		1.2 - 1.4 N.m 10.6 - 12.3 lb.in
Disconnect device Tool		Flat screwdriver Ø 4 mm Ø 0.16 in
Torque		0.5 - 0.8 N.m 4.4 - 7.1 lb.in

The connecting capacity data for one Rigid: Solid/Stranded, or one Flexible conductor (when applicable) is a mandatory information required by IEC, UL and CSA standards (Copper conductors). All other data are provided as supplementary information only. for more details, please consult our CB, UL or CSA certificates and technical datasheet available on http://www.TE.com

CE RoHS Gost R

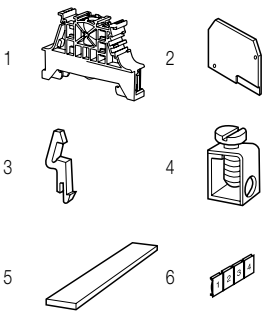

Accessories

	Description			Color	Type	Part Number		Pkg pce	Weight (1 pce) g
1	**End stops**	10 mm	0.394 in	Dark grey	BAM4	1SNK900001R0000		50	14.00
		5.2 mm	0.205 in		BAZ1	1SNK900002R0000		50	5.30
2	**End sections**	2.8 mm	0.110 in	Grey	FEM6	1SNA118368R1600		20	2.40
3	**Locking devices**	For busbar BO3		Blue	VRB3	1SNA128035R1600		10	
		For busbar BO6			VRB6	1SNA128361R0100		20	
4	**Clamps**	0.5-35 mm² 18-2 AWG			SFB1	1SNA163860R0500		50	12.00
		16-35 mm² 6-2 AWG			SFB2	1SNA168956R0600		50	11.00
5	**Busbars**	Busbars			BO3	1SNA164406R2400		1	
6	**Terminal block markers**	Blank card		White	RC1010	1SNA238000R1600		1	1.30

Complete list of accessories is indicated in the terminal block datasheet.
Some accessories such as jumper bars may modify the terminal block's ratings: complete information in the accessories catalogue pages.

Technical data valid for copper conductors only

M35/16.NT screw clamp terminal blocks

Neutral disconnect - 17 mm 0.669 in spacing

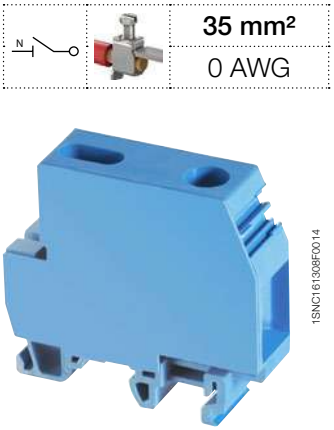

1SNC161308F0014

M35/16.NT

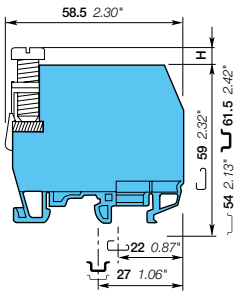

17 mm 0.669 in spacing

35 mm²
0 AWG

Description

- Ease the disconnection of your neutral circuits,
- Close terminal block, no end section needed,
- Compatible with screw clamp terminal blocks, wire size 2.5 mm² (5 mm 0.200 in spacing) to 16 mm² (12 mm 0.473 in spacing).

Ordering details

Description		Color	Type	Part Number		Pkg pce	Weight (1 pce) g
Neutral disconnect	For busbar 10 x 3 mm	Blue	M35/16.NT	1SNA125358R0300		20	60.00

Main technical data

		IEC	UL	CSA
1 conductor per clamp	Rigid: Solid/Stranded	10-50 mm²		
	Flexible without ferrule	10-35 mm²		
	Flexible with insulated ferrule			
	Gauge	B9		
Rated current / Rated cross section		125 A / 35 mm²		
Rated short-time withstand current (1s)		4200 A		
Rated voltage		400 V		
Impulse withstand voltage		6000 V		
Protection			NEMA	

Mounting instructions

Rail	G32, TH 35-7.5, TH 35-15
Wire stripping length	17 mm 0.67 in
Screw clamp Tool	Flat screwdriver Ø 6.5-7 mm Ø 0.256 - 0.276 in
Torque	2.8 - 3 Nm 24.6 - 26.1 lb.in
Disconnect device Tool	Flat screwdriver Ø 5.5 mm Ø 0.217 in
Torque	0.5 - 0.8 N.m 4.4 - 7.1 lb.in

The connecting capacity data for one Rigid: Solid/Stranded, or one Flexible conductor (when applicable) is a mandatory information required by IEC, UL and CSA standards (Copper conductors). All other data are provided as supplementary information only. For more details, please consult our CB, UL or CSA certificates and technical datasheet available on http://www.TE.com

CE RoHS Gost R

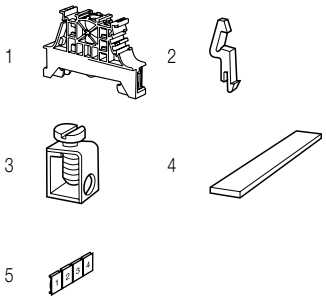

Accessories

	Description			Color	Type	Part Number		Pkg pce	Weight (1 pce) g
1	**End stops**	10 mm	0.394 in	Dark grey	BAM4	1SNK900001R0000		50	14.00
		5.2 mm	0.205 in		BAZ1	1SNK900002R0000		50	5.30
2	**Locking devices**	For busbar BO3		Blue	VRB3	1SNA128035R1600		10	
3	**Clamps**	0.5-35 mm² 18-2 AWG			SFB1	1SNA163860R0500		50	12.00
		16-35 mm² 6-2 AWG			SFB2	1SNA168956R0600		50	11.00
4	**Busbars**				BO3	1SNA164406R2400		1	
5	**Terminal block markers** Blank card			White	RC1010	1SNA238000R1600		1	1.30

Complete list of accessories is indicated in the terminal block datasheet.
Some accessories such as jumper bars may modify the terminal block's ratings: complete information in the accessories catalogue pages.

Technical data valid for copper conductors only.

1SNC161156S0201 - Rev. A

D2.5/5.NTLP.L spring terminal blocks
Installation - 5 mm 0.197 in spacing

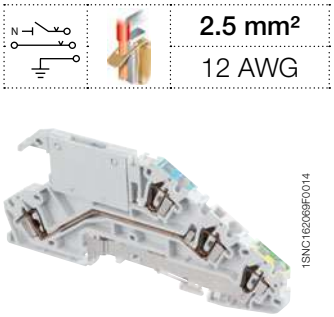

D2.5/5.NTLP.L

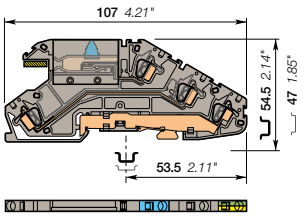

5 mm 0.197 in spacing

2.5 mm²	
12 AWG	

Description

- Specially developped for TN-C-S Network,
- Easy disconnection of neutral for isolation,
- Easy to access thanks to the front wiring entry,
- Clamping contact pressure non dependent on the operator and automatic creeping compensation,
- Save space with compact angled terminal blocks.

Ordering details

Description		Color	Type	Part Number		Pkg pce	Weight (1 pce) g
Installation	Disconnect neutral with busbar connection + feed-through + ground circuits	Grey, blue, green-yellow	D2.5/5.NTLP.L	1SNA290322R0100		40	15.00

Main technical data

		IEC	UL	CSA
1 conductor per clamp	Rigid: Solid/Stranded	0.14-4 mm²	26-12 AWG	
	Flexible without ferrule	0.14-2.5 mm²		
	Flexible with non insulated ferrule			
	Flexible with insulated ferrule	0.5-2.5 mm²		
	Gauge	A2		
Rated current / Rated cross section		20 A / 2.5 mm²	20 A / 12 AWG	
Rated short-time withstand current (1s)		300 A		
Rated voltage		250 V	300 V	
Impulse withstand voltage		4000 V		
Protection		IP20	NEMA 1	

Mounting instructions

Rail	TH 35-7.5, TH 35-15
Wire stripping length	9.5 mm 0.37 in
Tool	Flat screwdriver Ø 3.5 mm Ø 0.138 in

The connecting capacity data for one Rigid: Solid/Stranded, or one Flexible conductor (when applicable) is a mandatory information required by IEC, UL and CSA standards (Copper conductors). All other data are provided as supplementary information only. For more details, please consult our CB, UL or CSA certificates and technical datasheet available on http://www.TE.com

RoHS / USR CNR / Gost R

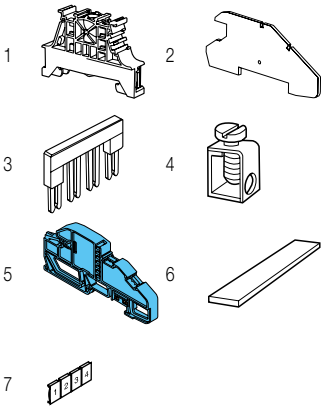

Accessories

	Description			Color	Type	Part Number		Pkg pce	Weight (1 pce) g
1	End stops	5.2 mm	0.205 in	Dark grey	BAZ1	1SNK900002R0000		50	5.30
		10 mm	0.394 in		BAM4	1SNK900001R0000		50	14.00
2	End sections	2.5 mm	0.098 in	Grey	FED5.L.A	1SNA291559R0400		20	5.50
3	Jumper bars	2 poles	24 A	Orange	BJDL5-2	1SNA291102R2300		50	1.00
		3 poles			BJDL5-3	1SNA291103R2400		50	0.70
		4 poles			BJDL5-4	1SNA291104R2500		50	0.80
		5 poles			BJDL5-5	1SNA291105R2600		20	0.90
		10 poles			BJDL5-10	1SNA291110R2600		20	1.20
4	Clamps	0.5-35 mm²	18-2 AWG		SFB1	1SNA163860R0500		50	12.00
		16-35 mm²	6-2 AWG		SFB2	1SNA168956R0600		50	11.00
5	Distribution bar holders			Blue	SPBO.NT.L	1SNA399886R2100		20	12.00
6	Busbars	1000 x 10 x 3 mm	39.4 x 0.394 x 0.118 in		BO3	1SNA164406R2400		1	
7	Terminal block markers	Blank card		White	RC55	1SNA230000R1200		1	2.90

Complete list of accessories is indicated in the terminal block datasheet.
Some accessories such as jumper bars may modify the terminal block's ratings: complete information in the accessories catalogue pages.

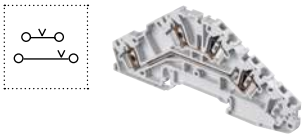

Installation spring terminal blocks

Description		Color	Type	Part Number		Pkg pce	Weight (1 pce) g
Installation	2 feed-through circuits	Grey	D2.5/5.LL.L	1SNA290328R1700		40	13.00

Technical data valid for copper conductors only.

1SNC162038S0201 - Rev. A

D2.5/5.NLP.L spring terminal blocks
Installation - 5 mm 0.197 in spacing

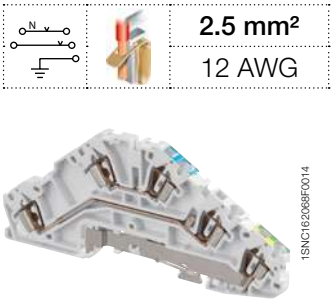

2.5 mm²
12 AWG

D2.5/5.NLP.L

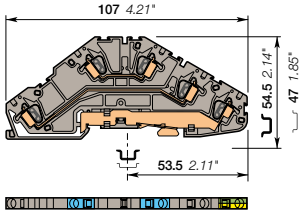

5 mm 0.197 in spacing

Description

- Specially developped for TN-C-S Network,
- Easy to access thanks to the front wiring entry,
- Clamping contact pressure non dependent on the operator and automatic creeping compensation,
- Save space with compact angled terminal blocks.

Ordering details

Description		Color	Type	Part Number		Pkg pce	Weight (1 pce) g
Installation	Neutral + feed-through + ground circuits	Grey, blue, Green-yellow	D2.5/5.NLP.L	1SNA290324R0300		40	17.00

Main technical data

		IEC	UL	CSA
1 conductor per clamp	Rigid: Solid/Stranded	0.14-4 mm²	26-12 AWG	
	Flexible without ferrule	0.14-2.5 mm²		
	Flexible with non insulated ferrule			
	Flexible with insulated ferrule	0.5-2.5 mm²		
	Gauge	A2		
Rated current / Rated cross section		24 A / 2.5 mm²	20 A / 12 AWG	
Rated short-time withstand current (1s)		300 A		
Rated voltage		250 V	300 V	
Impulse withstand voltage		4000 V		
Protection		IP20	NEMA 1	

The connecting capacity data for one Rigid: Solid/Stranded, or one Flexible conductor (when applicable) is a mandatory information required by IEC, UL and CSA standards (Copper conductors). All other data are provided as supplementary information only. For more details, please consult our CB, UL or CSA certificates and technical datasheet available on http://www.TE.com

RoHS USR CNR Gost R

Mounting instructions

Rail	TH 35-7.5, TH 35-15
Wire stripping length	9.5 mm 0.37 in
Tool	Flat screwdriver Ø 3.5 mm Ø 0.138 in

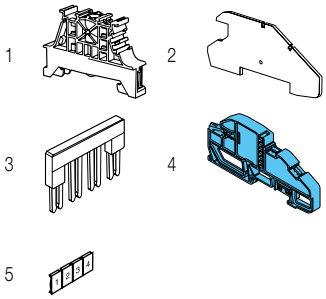

Accessories

	Description			Color	Type	Part Number		Pkg pce	Weight (1 pce) g
1	**End stops**	5.2 mm	0.205 in	Dark grey	BAZ1	1SNK900002R0000		50	5.30
		10 mm	0.394 in		BAM4	1SNK900001R0000		50	14.00
2	**End sections**	2.5 mm	0.098 in	Grey	FED5.L.B	1SNA291560R0100		20	5.50
3	**Jumper bars**	2 poles	24 A	Orange	BJDL5-2	1SNA291102R2300		50	1.00
		3 poles			BJDL5-3	1SNA291103R2400		50	0.70
		4 poles			BJDL5-4	1SNA291104R2500		50	0.80
		5 poles			BJDL5-5	1SNA291105R2600		20	0.90
		10 poles			BJDL5-10	1SNA291110R2600		20	1.20
4	**Distribution bar holders**			Blue	SPBO.NT.L	1SNA399886R2100		20	12.00
5	**Terminal block markers** Blank card			White	RC55	1SNA230000R1200		1	2.90

Complete list of accessories is indicated in the terminal block datasheet.
Some accessories such as jumper bars may modify the terminal block's ratings: complete information in the accessories catalogue pages.

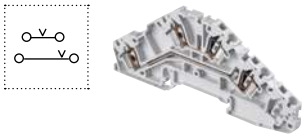

Installation spring terminal blocks

Description		Color	Type	Part Number		Pkg pce	Weight (1 pce) g
Installation	2 feed-through circuits	Grey	D2.5/5.LL.L	1SNA290328R1700		40	13.00

Technical data valid for copper conductors only.

1SNC162039S0201 - Rev. A

D2.5/5.NL.L spring terminal blocks
Installation - 5 mm 0.197 in spacing

2.5 mm²
12 AWG

1SNC162096F0014

D2.5/5.NL.L

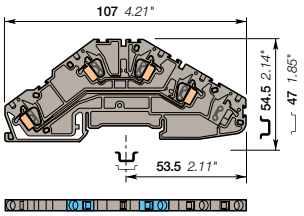

5 mm 0.197 in spacing

Description

- Specially developped for TN-C-S Network,
- Easy to access thanks to the front wiring entry,
- Clamping contact pressure non dependent on the operator and automatic creeping compensation,
- Save space with compact angled terminal blocks.

Ordering details

Description		Color	Type	Part Number		Pkg pce	Weight (1 pce) g
Installation	Neutral + feed-through circuits	Grey, blue	D2.5/5.NL.L	1SNA290330R1500		40	13.00

Main technical data

		IEC	UL	CSA
1 conductor per clamp	Rigid: Solid/Stranded	0.14-4 mm²	26-12 AWG	
	Flexible without ferrule	0.14-2.5 mm²		
	Flexible with non insulated ferrule			
	Flexible with insulated ferrule	0.5-2.5 mm²		
	Gauge	A2		
Rated current / Rated cross section		24 A / 2.5 mm²	20 A / 12 AWG	
Rated short-time withstand current (1s)		300 A		
Rated voltage		400 V	300 V	
Impulse withstand voltage		6000 V		
Protection		IP20	NEMA 1	

Mounting instructions

Rail	TH 35-7.5, TH 35-15
Wire stripping length	9.5 mm 0.37 in
Tool	Flat screwdriver Ø 3.5 mm Ø 0.138 in

The connecting capacity data for one Rigid: Solid/Stranded, or one Flexible conductor (when applicable) is a mandatory information required by IEC, UL and CSA standards (Copper conductors). All other data are provided as supplementary information only. For more details, please consult our CB, UL or CSA certificates and technical datasheet available on http://www.TE.com

RoHS — RoHS; USR CNR; Gost R

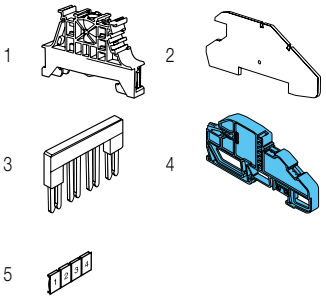

Accessories

	Description			Color	Type	Part Number		Pkg pce	Weight (1 pce) g
1	**End stops**	5.2 mm	0.205 in	Dark grey	BAZ1	1SNK900002R0000		50	5.30
		10 mm	0.394 in		BAM4	1SNK900001R0000		50	14.00
2	**End sections**	2.5 mm	0.098 in	Grey	FED5.L.B	1SNA291560R0100		20	5.50
3	**Jumper bars**	2 poles	24 A	Orange	BJDL5-2	1SNA291102R2300		50	1.00
		3 poles			BJDL5-3	1SNA291103R2400		50	0.70
		4 poles			BJDL5-4	1SNA291104R2500		50	0.80
		5 poles			BJDL5-5	1SNA291105R2600		20	0.90
		10 poles			BJDL5-10	1SNA291110R2600		20	1.20
4	**Distribution bar holders**			Blue	SPBO.NT.L	1SNA399886R2100		20	12.00
5	**Terminal block markers**	Blank card		White	RC55	1SNA230000R1200		1	2.90

Complete list of accessories is indicated in the terminal block datasheet.
Some accessories such as jumper bars may modify the terminal block's ratings: complete information in the accessories catalogue pages.

Installation spring terminal blocks

Description		Color	Type	Part Number		Pkg pce	Weight (1 pce) g
Installation	2 feed-through + ground circuits	Grey, green-yellow	D2.5/5.LLP.L	1SNA290326R0500		40	17.00

Technical data valid for copper conductors only.

1SNC162041S0201 - Rev. A

D2.5/5.LLP.L spring terminal blocks
Installation - 5 mm 0.197 in spacing

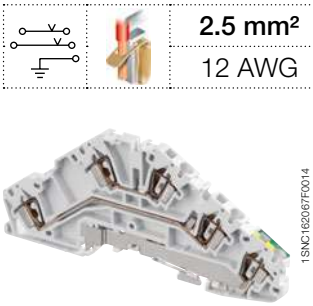

D2.5/5.LLP.L

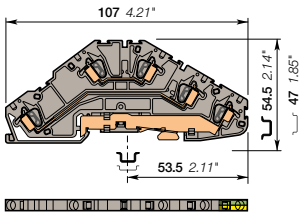

5 mm 0.197 in spacing

2.5 mm²
12 AWG

Description

- Specially developped for TN-C-S Network,
- Easy to access thanks to the front wiring entry,
- Clamping contact pressure non dependent on the operator and automatic creeping compensation,
- Save space with compact angled terminal blocks.

Ordering details

Description		Color	Type	Part Number		Pkg pce	Weight (1 pce) g
Installation	2 feed-through + ground circuits	Grey, Green-yellow	D2.5/5.LLP.L	1SNA290326R0500		40	17.00

Main technical data

		IEC	UL	CSA
1 conductor per clamp	Rigid: Solid/Stranded	0.14-4 mm²	26-12 AWG	
	Flexible without ferrule	0.14-2.5 mm²		
	Flexible with non insulated ferrule			
	Flexible with insulated ferrule	0.5-2.5 mm²		
	Gauge	A2		
Rated current / Rated cross section		24 A / 2.5 mm²	20 A / 12 AWG	
Rated short-time withstand current (1s)		300 A		
Rated voltage		250 V	300 V	
Impulse withstand voltage		4000 V		
Protection		IP20	NEMA 1	

Mounting instructions

Rail	TH 35-7.5, TH 35-15
Wire stripping length	9.5 mm 0.37 in
Tool	Flat screwdriver Ø 3.5 mm Ø 0.138 in

The connecting capacity data for one Rigid: Solid/Stranded, or one Flexible conductor (when applicable) is a mandatory information required by IEC, UL and CSA standards (Copper conductors). All other data are provided as supplementary information only. For more details, please consult our CB, UL or CSA certificates and technical datasheet available on http://www.TE.com

RoHS — USR CNR — Gost R

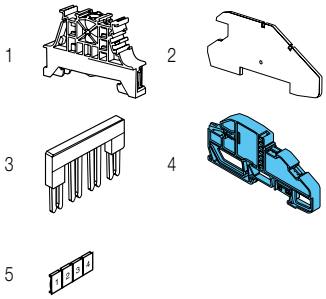

Accessories

	Description			Color	Type	Part Number		Pkg pce	Weight (1 pce) g
1	**End stops**	5.2 mm	0.205 in	Dark grey	BAZ1	1SNK900002R0000		50	5.30
		10 mm	0.394 in		BAM4	1SNK900001R0000		50	14.00
2	**End sections**	2.5 mm	0.098 in	Grey	FED5.L.B	1SNA291560R0100		20	5.50
3	**Jumper bars**	2 poles	24 A	Orange	BJDL5-2	1SNA291102R2300		50	1.00
		3 poles			BJDL5-3	1SNA291103R2400		50	0.70
		4 poles			BJDL5-4	1SNA291104R2500		50	0.80
		5 poles			BJDL5-5	1SNA291105R2600		20	0.90
		10 poles			BJDL5-10	1SNA291110R2600		20	1.20
4	**Distribution bar holders**			Blue	SPBO.NT.L	1SNA399886R2100		20	12.00
5	**Terminal block markers** Blank card			White	RC55	1SNA230000R1200		1	2.90

Complete list of accessories is indicated in the terminal block datasheet.
Some accessories such as jumper bars may modify the terminal block's ratings: complete information in the accessories catalogue pages.

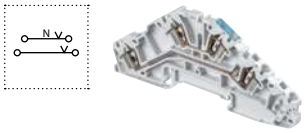

Installation spring terminal blocks

Description		Color	Type	Part Number		Pkg pce	Weight (1 pce) g
Installation	Neutral + feed-through circuits	Grey, blue	D2.5/5.NL.L	1SNA290330R1500		40	13.00

Technical data valid for copper conductors only.

1SNC162040S0201 - Rev. A

D2.5/5.LL.L spring terminal blocks
Installation - 5 mm 0.197 in spacing

2.5 mm²
12 AWG

D2.5/5.LL.L

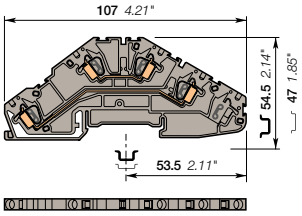

5 mm 0.197 in spacing

Description

- Specially developped for TN-C-S Network,
- Easy to access thanks to the front wiring entry,
- Clamping contact pressure non dependent on the operator and automatic creeping compensation,
- Save space with compact angled terminal blocks.

Ordering details

Description		Color	Type	Part Number		Pkg pce	Weight (1 pce) g
Installation	2 feed-through circuits	Grey	D2.5/5.LL.L	1SNA290328R1700		40	13.00

Main technical data

		IEC	UL	CSA
1 conductor per clamp	Rigid: Solid/Stranded	0.14-4 mm²	26-12 AWG	
	Flexible without ferrule	0.14-2.5 mm²		
	Flexible with non insulated ferrule			
	Flexible with insulated ferrule	0.5-2.5 mm²		
	Gauge	A2		
Rated current / Rated cross section		24 A / 2.5 mm²	20 A / 12 AWG	
Rated short-time withstand current (1s)		300 A		
Rated voltage		400 V	300 V	
Impulse withstand voltage		6000 V		
Protection		IP20	NEMA 1	

The connecting capacity data for one Rigid: Solid/Stranded, or one Flexible conductor (when applicable) is a mandatory information required by IEC, UL and CSA standards (Copper conductors). All other data are provided as supplementary information only. For more details, please consult our CB, UL or CSA certificates and technical datasheet available on http://www.TE.com

RoHS — USR CNR — Gost R

Mounting instructions

Rail	TH 35-7.5, TH 35-15
Wire stripping length	9.5 mm 0.37 in
Tool	Flat screwdriver Ø 3.5 mm Ø 0.138 in

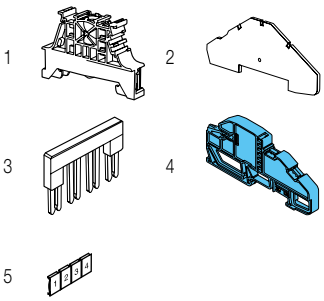

Accessories

	Description			Color	Type	Part Number		Pkg pce	Weight (1 pce) g
1	End stops	5.2 mm	0.205 in	Dark grey	BAZ1	1SNK900002R0000		50	5.30
		10 mm	0.394 in		BAM4	1SNK900001R0000		50	14.00
2	End sections	2.5 mm	0.098 in	Grey	FED5.L.B	1SNA291560R0100		20	4.75
3	Jumper bars	2 poles	24 A	Orange	BJDL5-2	1SNA291102R2300		50	1.00
		3 poles			BJDL5-3	1SNA291103R2400		50	0.70
		4 poles			BJDL5-4	1SNA291104R2500		50	0.80
		5 poles			BJDL5-5	1SNA291105R2600		20	0.90
		10 poles			BJDL5-10	1SNA291110R2600		20	1.20
4	Distribution bar holders			Blue	SPBO.NT.L	1SNA399886R2100		20	12.00
5	Terminal block markers	Blank card		White	RC55	1SNA230000R1200		1	2.90

Complete list of accessories is indicated in the terminal block datasheet.
Some accessories such as jumper bars may modify the terminal block's ratings: complete information in the accessories catalogue pages.

Technical data valid for copper conductors only.

1SNC162042S0201 - Rev. A

Overview 238

Screw clamp technology

Ground + neutral

10 mm²	**M10/10.PE.N**	239
16 mm²	**M16/12.PE.N**	240
35 mm²	**M35/16.PE.N**	241

1SNC160104S0201

Screw clamp technology

Section		PEN	Feed-through
IEC	UL/CSA		
10 mm²		**M10/10.PE.N** 20 mm 0.787 in	**M10/10** 10 mm 0.394 in
16 mm²		**M16/12.PE.N** 24 mm 0.945 in	**M16/12** 12 mm 0.472 in
35 mm²		**M35/16.PE.N** 32 mm 1.260 in	**M35/16** 16 mm 0.630 in

1SNC160097S0201

M10/10.PE.N screw clamp terminal blocks

Ground + neutral - 20 mm 0.787 in spacing

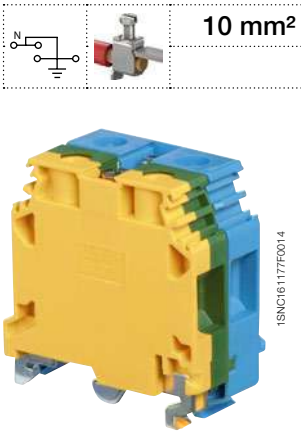

M10/10.PE.N

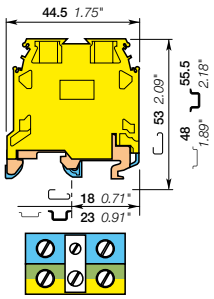

20 mm 0.787 in spacing

10 mm²

Description

- Simplify your PE.N connection with M10/10.P block connected to M10/10.N block through a pre-mounted jumper,
- Adapted to TNS and TNC-S electrical network.

Ordering details

Description		Color	Type	Part Number		Pkg pce	Weight (1 pce) g
Ground + neutral	Screw rail connection	Green-yellow, blue	M10/10.PE.N	1SNA165683R2200		20	53.00

Main technical data

		IEC	UL	CSA
1 conductor per clamp	Rigid: Solid/Stranded	0.5-16 mm²		
	Flexible without ferrule	0.5-10 mm²		
	Flexible with insulated ferrule			
	Gauge	B6		
Rated cross section		10 mm²		
Rated short-time withstand current (1s)		1200 A		

Mounting instructions

Rail	G32, TH 35-7.5, TH 35-15
Wire stripping length	12 mm 0.47 in
Screw clamp Tool	Flat screwdriver Ø 5.5 mm Ø 0.22 in
Torque	1.2 - 1.4 N.m 10.6 - 12.3 lb.in
Rail connection screw Tool	Flat screwdriver Ø 4 mm Ø 0.16 in
Torque	0.8 N.m 7.1 lb.in

The connecting capacity data for one Rigid: Solid/Stranded, or one Flexible conductor (when applicable) is a mandatory information required by IEC, UL and CSA standards (Copper conductors). All other data are provided as supplementary information only. For more details, please consult our CB, UL or CSA certificates and technical datasheet available on http://www.TE.com

CE RoHS Gost R

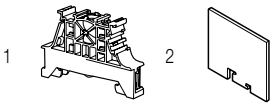

Accessories

	Description			Color	Type	Part Number		Pkg pce	Weight (1 pce) g
1	**End stops**	10 mm	0.394 in	Dark grey	BAM4	1SNK900001R0000		50	14.00
		5.2 mm	0.205 in		BAZ1	1SNK900002R0000		50	5.30
2	**Circuit separators**	2.4 mm	0.094 in	Grey	SCFEX1	1SNA103619R0400		10	30.00
					SCFEX3	1SNA103620R0100		10	30.00
		3 mm	0.118 in		SCFM6	1SNA114825R0500		20	4.00

Complete list of accessories is indicated in the terminal block datasheet.
Some accessories such as jumper bars may modify the terminal block's ratings: complete information in the accessories catalogue pages.

Technical data valid for copper conductors only.

M16/12.PE.N screw clamp terminal blocks

Ground + neutral - 24 mm 0.945 in spacing

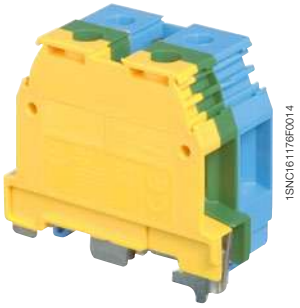

M16/12.PE.N

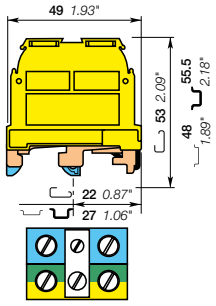

24 mm 0.945 in spacing

Description

- Simplify your PE.N connection with M16/12.P block connected to M16/12.N block through a pre-mounted jumper,
- Adapted to TNS and TNC-S electrical network.

Ordering details

Description		Color	Type	Part Number		Pkg pce	Weight (1 pce) g
Ground + neutral	Screw rail connection	Green-yellow, blue	M16/12.PE.N	1SNA165680R0300		20	68.00

Main technical data

		IEC	UL	CSA
1 conductor per clamp	Rigid: Solid/Stranded	2.5-25 mm²		
	Flexible without ferrule	2.5-16 mm²		
	Flexible with insulated ferrule			
	Gauge	B7		
Rated cross section		16 mm²		
Rated short-time withstand current (1s)		1920 A		

Mounting instructions

Rail	G32, TH 35-7.5, TH 35-15
Wire stripping length	14 mm 0.55 in
Screw clamp Tool	Flat screwdriver Ø 5.5 mm Ø 0.22 in
Torque	1.2 - 1.4 N.m 10.6 - 12.3 lb.in
Rail connection screw Tool	Flat screwdriver Ø 5.5 mm Ø 0.22 in
Torque	1 N.m 8.8 lb.in

The connecting capacity data for one Rigid: Solid/Stranded, or one Flexible conductor (when applicable) is a mandatory information required by IEC, UL and CSA standards (Copper conductors). All other data are provided as supplementary information only. For more details, please consult our CB, UL or CSA certificates and technical datasheet available on http://www.TE.com

CE RoHS Gost R

Accessories

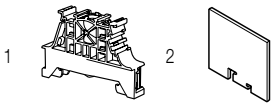

	Description			Color	Type	Part Number		Pkg pce	Weight (1 pce) g
1	**End stops**	10 mm	0.394 in	Dark grey	BAM4	1SNK900001R0000		50	14.00
		5.2 mm	0.205 in		BAZ1	1SNK900002R0000		50	5.30
2	**Circuit separators**	2.4 mm	0.094 in	Grey	SCFEX1	1SNA103619R0400		10	30.00
					SCFEX3	1SNA103620R0100		10	30.00
		3 mm	0.118 in		SCFM6	1SNA114825R0500		20	4.00

Complete list of accessories is indicated in the terminal block datasheet.
Some accessories such as jumper bars may modify the terminal block's ratings: complete information in the accessories catalogue pages.

Technical data valid for copper conductors only.

M35/16.PE.N screw clamp terminal blocks

Ground + neutral - 32 mm 1.260 in spacing

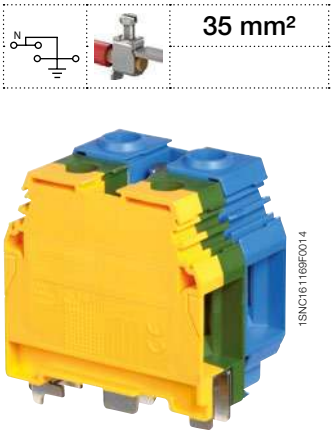

M35/16.PE.N

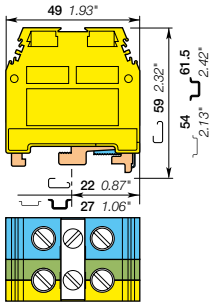

32 mm 1.260 in spacing

Description

- Simplify your PE.N connection with M35/16.P block connected to M35/16.N block through a pre-mounted jumper,
- Adapted to TNS and TNC-S electrical network.

Ordering details

Description		Color	Type	Part Number		Pkg pce	Weight (1 pce) g
Ground + neutral	Screw rail connection	Green-yellow, blue	M35/16.PE.N	1SNA165575R2500		10	119.00

Main technical data

		IEC	UL	CSA
1 conductor per clamp	Rigid: Solid/Stranded	6-50 mm²		
	Flexible without ferrule	6-35 mm²		
	Flexible with insulated ferrule			
	Gauge	B9		
Rated cross section		35 mm²		
Rated short-time withstand current (1s)		4200 A		

Mounting instructions

Rail		G32, TH 35-7.5, TH 35-15
Wire stripping length		17 mm 0.67 in
Screw clamp Tool		Flat screwdriver Ø 7 mm Ø 0.32 in
Torque		2.8 - 3 N.m 24.6 - 26.1 lb.in
Rail connection screw Tool		Flat screwdriver Ø 5.5 mm Ø 0.22 in
Torque		1 N.m 8.8 lb.in

The connecting capacity data for one Rigid: Solid/Stranded, or one Flexible conductor (when applicable) is a mandatory information required by IEC, UL and CSA standards (Copper conductors). All other data are provided as supplementary information only. For more details, please consult our CB, UL or CSA certificates and technical datasheet available on http://www.TE.com

CE RoHS Gost R

Accessories

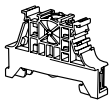

	Description			Color	Type	Part Number		Pkg pce	Weight (1 pce) g
1	**End stops**	10 mm	0.394 in	Dark grey	BAM4	1SNK900001R0000		50	14.00
		5.2 mm	0.205 in		BAZ1	1SNK900002R0000		50	5.30

Complete list of accessories is indicated in the terminal block datasheet.
Some accessories such as jumper bars may modify the terminal block's ratings: complete information in the accessories catalogue pages.

Technical data valid for copper conductors only.

1SNC161171S0201

Overview 244

Screw clamp technology

Disconnect with pull lever

4 mm² / 10 AWG	**M4/6.D2.2S2**	2 disconnect circuits	245
	M4/6.D2.2S2.T	2 disconnect circuits and test	246
	M4/6.D2.S1R	Change over type	247
	M4/6.D2.S1R.T	Change over type and test	248

1SNC161171S0201

Screw clamp technology

Disconnect with pull lever

Section IEC	UL/CSA				
4 mm²	10 AWG	**M4/6.D2.2S2** 6 mm 0.236 in	**M4/6.D2.2S2.T** 6 mm 0.236 in	**M4/6.D2.S1R** 6 mm 0.236 in	**M4/6.D2.S1R.T** 6 mm 0.236 in

1SNC161170S0201 - Rev. A

M4/6.D2.2S2 screw clamp terminal blocks

Disconnect with pull lever - with 2 independent circuits - 6 mm 0.236 in spacing

4 mm²
10 AWG

M4/6.D2.2S2

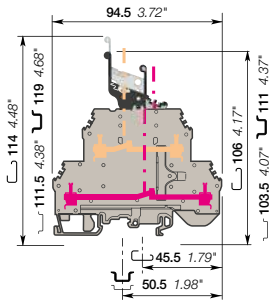

6 mm 0.236 in spacing

Description

- Save space with double deck terminal blocks: 2 idependent disconnect circuits in just 6 mm 0.236 in spacing,
- Black pull lever controls upper deck contact and grey pull lever controls lower deck contact,
- Closed terminal block: no end section needed.

Ordering details

Description		Color	Type	Part Number		Pkg pce	Weight (1 pce) g
Disconnect	With 2 independent circuits	Grey, black	M4/6.D2.2S2	1SNA199444R2500		25	30.00

Main technical data

		IEC	UL	CSA
1 conductor per clamp	Rigid: Solid/Stranded	0.2-4 mm²		24-10 AWG
	Flexible without ferrule	0.2-4 mm²		
	Flexible with insulated ferrule			
	Gauge	A4		
Rated current / Rated cross section		12 A / 1 mm²		10 A / 10 AWG
Rated short-time withstand current (1s)		120 A		
Rated voltage		500 V		300 V
Impulse withstand voltage		6000 V		
Protection		IP20	NEMA 1	

Mounting instructions

Rail	G32, TH 35-7.5, TH 35-15
Wire stripping length	9.5 mm 0.374 in
Tool	Flat screwdriver Ø 4 mm Ø 0.157 in
Torque	0.5 - 0.8 Nm 4.4 - 7.1 lb.in

The connecting capacity data for one Rigid: Solid/Stranded, or one Flexible conductor (when applicable) is a mandatory information required by IEC, UL and CSA standards (Copper conductors). All other data are provided as supplementary information only. For more details, please consult our CB, UL or CSA certificates and technical datasheet available on http://www.TE.com

CE RoHS cCSAus Gost R

Notes

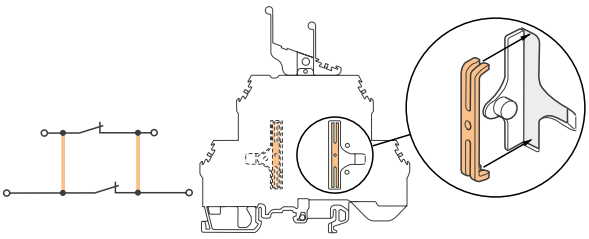

Mounting of the vertical jumper bar between decks (ITVE2).

Interconnection between decks is possible on each side of the switch, using accessory ITVE2.

Trap door opens with a screwdriver.

Accessories

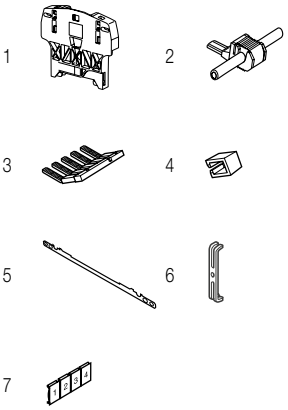

	Description			Color	Type	Part Number		Pkg pce	Weight (1 pce) g
1	**End stops**	10 mm	0.394 in	Dark grey	BAZH1	1SNK900102R0000		20	24.00
2	**Jumper bars**	1 poles	24 A	Grey	AD2.5	1SNA114205R2000		50	1.60
3	**Lateral jumper bars**	2 poles	35 A	Grey	PC6-2	1SNA113546R1400		10	2.00
		3 poles			PC6-3	1SNA116536R0500		10	2.00
		4 poles			PC6-4	1SNA116537R0600		10	3.00
		10 poles			PC6-10	1SNA113548R2600		10	8.00
4	**Insulating tips**	For lateral jumper bars type PC...			EIP	1SNA113550R2400		10	
5	**Shield connectors**				CBD2S	1SNA178408R1400		50	
6	**Inner deck jumper bars**				ITVE2	1SNA179825R2600		20	1.30
7	**Terminal block markers**	Blank card		White	RC610	1SNA233000R0100		1	7.50

Complete list of accessories is indicated in the terminal block datasheet.
Some accessories such as jumper bars may modify the terminal block's ratings: complete information in the accessories catalogue pages.

Technical data valid for copper conductors only.

M4/6.D2.2S2 screw clamp terminal blocks

Disconnect with pull lever with 2 independent circuits and 4 test sockets - 6 mm 0.236 in spacing

4 mm²
10 AWG

M4/6.D2.2S2

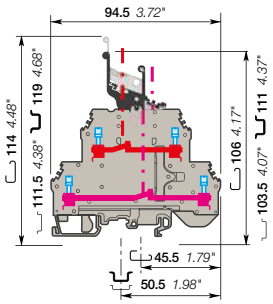

6 mm 0.236 in spacing

Description

- Save space with double deck terminal blocks: 2 idependent disconnect circuits in just 6 mm 0.236 in spacing,
- Black pull lever controls upper deck contact and grey pull lever controls lower deck contact,
- Ease your test operations with the 2 built-in test sockets,
- Closed terminal block: no end section needed.

Ordering details

Description		Color	Type	Part Number		Pkg pce	Weight (1 pce) g
Disconnect	With 2 independent circuits and 4 test sockets DIA 2 mm 0.079 in	Grey, black	M4/6.D2.2S2.T	1SNA199448R0100		25	30.00

Main technical data

		IEC	UL	CSA
1 conductor per clamp	Rigid: Solid/Stranded	0.2-4 mm²		24-10 AWG
	Flexible without ferrule	0.2-4 mm²		
	Flexible with insulated ferrule			
	Gauge	A4		
Rated current / Rated cross section		12 A / 1 mm²		10 A / 10 AWG
Rated short-time withstand current (1s)		120 A		
Rated voltage		500 V		300 V
Impulse withstand voltage		6000 V		
Protection		IP20	NEMA 1	

The connecting capacity data for one Rigid: Solid/Stranded Flexible conductor (when applicable) is a mandatory information required by IEC, UL and CSA standards (Copper conductors). All other data are provided as supplementary information only. For more details, please consult our CB, UL or CSA certificates and technical datasheet available on http://www.TE.com

CE | RoHS | cCSAus | Gost R

Mounting instructions

Rail	G32, TH 35-7.5, TH 35-15
Wire stripping length	9.5 mm 0.374 in
Tool	Flat screwdriver Ø 4 mm Ø 0.157 in
Torque	0.5 - 0.6 Nm 4.4 - 5.3 lb.in

Notes

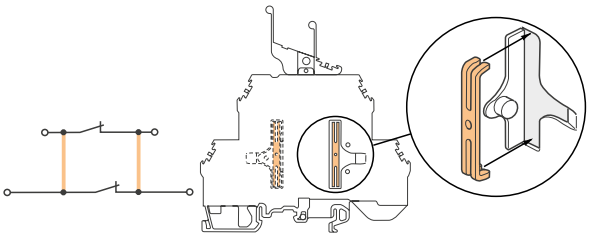

Mounting of the vertical jumper bar between decks (ITVE2).

Interconnection between decks is possible on each side of the switch, using accessory ITVE2.

Trap door opens with a screwdriver.

Accessories

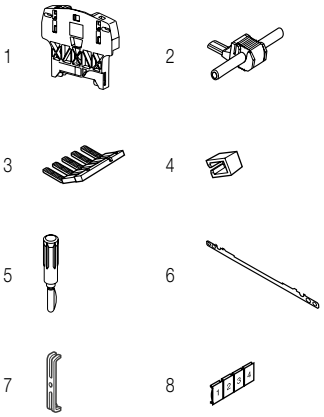

	Description			Color	Type	Part Number		Pkg pce	Weight (1 pce) g
1	**End stops**	10 mm	0.394 in	Dark grey	BAZH1	1SNK900102R0000		20	24.00
2	**Jumper bars**	1 poles	24 A	Grey	AD2.5	1SNA114205R2000		50	1.60
3	**Lateral jumper bars**	2 poles	35 A	Grey	PC6-2	1SNA113546R1400		10	2.00
		3 poles			PC6-3	1SNA116536R0500		10	2.00
		4 poles			PC6-4	1SNA116537R0600		10	3.00
		10 poles			PC6-10	1SNA113548R2600		10	8.00
4	**Insulating tips**	For lateral jumper bars type PC...			EIP	1SNA113550R2400		10	
5	**Test plugs**	DIA 2 mm 0.079 in		Black	FC2	1SNA007865R2600		100	
6	**Shield connectors**				CBD2S	1SNA178408R1400		50	
7	**Inner deck jumper bars**				ITVE2	1SNA179825R2600		20	1.30
8	**Terminal block markers**	Blank card		White	RC610	1SNA233000R0100		1	7.50

Complete list of accessories is indicated in the terminal block datasheet.
Some accessories such as jumper bars may modify the terminal block's ratings: complete information in the accessories catalogue pages.

Technical data valid for copper conductors only.

1SNC161160S0201 Rev. B

M4/6.D2.S1R screw clamp terminal blocks

Disconnect with pull lever - change over type - 6 mm 0.236 in spacing

M4/6.D2.S1R

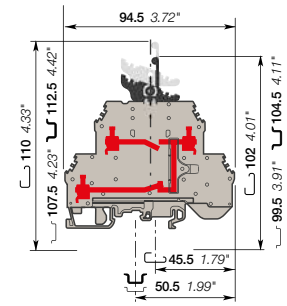

6 mm 0.236 in spacing

	4 mm²
	10 AWG

Description

- Direct a signal either to the upper deck (contact control pull lever in high position), or to the lower deck (pull lever in low position) with just one operation,
- Closed terminal block: no end section needed.

Ordering details

Description		Color	Type	Part Number		Pkg pce	Weight (1 pce) g
Disconnect	Change over type	Grey, black	M4/6.D2.S1R	1SNA199452R2500		25	30.00

Main technical data

		IEC	UL	CSA
1 conductor per clamp	Rigid: Solid/Stranded	0.2-4 mm²		24-10 AWG
	Flexible without ferrule	0.2-4 mm²		
	Flexible with insulated ferrule			
	Gauge	A4		
Rated current / Rated cross section		12 A / 1 mm²		10 A / 10 AWG
Rated short-time withstand current (1s)		120 A		
Rated voltage		500 V		300 V
Impulse withstand voltage		6000 V		
Protection		IP20	NEMA 1	

The connecting capacity data for one Rigid: Solid/Stranded, or one Flexible conductor (when applicable) is a mandatory information required by IEC, UL and CSA standards (Copper conductors). All other data are provided as supplementary information only. For more details, please consult our CB, UL or CSA certificates and technical datasheet available on http://www.TE.com

CE RoHS cCSAus Gost R

Mounting instructions

Rail	G32, TH 35-7.5, TH 35-15
Wire stripping length	9.5 mm 0.374 in
Tool	Flat screwdriver Ø 4 mm Ø 0.157 in
Torque	0.5 - 0.8 Nm 4.4 - 7.1 lb.in

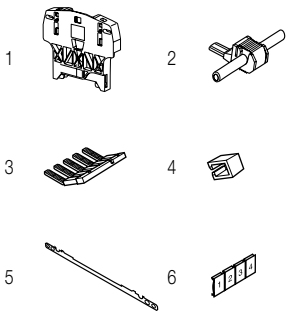

Accessories

	Description			Color	Type	Part Number		Pkg pce	Weight (1 pce) g
1	**End stops**	10 mm	0.394 in	Dark grey	BAZH1	1SNK900102R0000		20	24.00
2	**Jumper bars**	1 poles	24 A	Grey	AD2.5	1SNA114205R2000		50	1.60
3	**Lateral jumper bars**	2 poles	35 A	Grey	PC6-2	1SNA113546R1400		10	2.00
		3 poles			PC6-3	1SNA116536R0500		10	2.00
		4 poles			PC6-4	1SNA116537R0600		10	3.00
		10 poles			PC6-10	1SNA113548R2600		10	8.00
4	**Insulating tips**	For lateral jumper bars type PC...			EIP	1SNA113550R2400		10	
5	**Shield connectors**				CBD2S	1SNA178408R1400		50	
6	**Terminal block markers**	Blank card		White	RC610	1SNA233000R0100		1	7.50

Complete list of accessories is indicated in the terminal block datasheet.
Some accessories such as jumper bars may modify the terminal block's ratings: complete information in the accessories catalogue pages.

Technical data valid for copper conductors only.

M4/6.D2.S1R screw clamp terminal blocks

Disconnect with pull lever - change over type with 3 test sockets 6 mm 0.236 in spacing

4 mm²
10 AWG

M4/6.D2.S1R

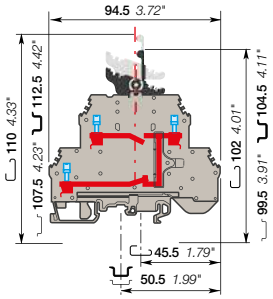

6 mm 0.236 in spacing

Description

- Direct a signal either to the upper deck (contact control pull lever in high position), or to the lower deck (pull lever in low position) with just one operation,
- Ease your test operations with the built-in test sockets,
- Closed terminal block: no end section needed.

Ordering details

Description		Color	Type	Part Number		Pkg pce	Weight (1 pce) g
Disconnect	Change over type with 3 test sockets DIA 2 mm 0.079 in	Grey, black	M4/6.D2.S1R.T	1SNA199456R2100		25	30.00

Main technical data

		IEC	UL	CSA
1 conductor per clamp	Rigid: Solid/Stranded	0.2-4 mm²		24-10 AWG
	Flexible without ferrule	0.2-4 mm²		
	Flexible with insulated ferrule			
	Gauge	A4		
Rated current / Rated cross section		12 A / 1 mm²		10 A / 10 AWG
Rated short-time withstand current (1s)		120 A		
Rated voltage		500 V		300 V
Impulse withstand voltage		6000 V		
Protection		IP20	NEMA 1	

Mounting instructions

Rail	G32, TH 35-7.5, TH 35-15
Wire stripping length	9.5 mm 0.374 in
Tool	Flat screwdriver Ø 4 mm Ø 0.157 in
Torque	0.5 - 0.6 Nm 4.4 - 5.3 lb.in

The connecting capacity data for one Rigid: Solid/Stranded, or one Flexible conductor (when applicable) is a mandatory information required by IEC, UL and CSA standards (Copper conductors). All other data are provided as supplementary information only. For more details, please consult our CB, UL or CSA certificates and technical datasheet available on http://www.TE.com

CE RoHS cCSAus Gost R

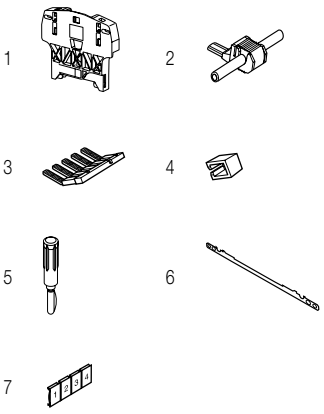

Accessories

	Description			Color	Type	Part Number		Pkg pce	Weight (1 pce) g
1	**End stops**	10 mm	0.394 in	Dark grey	BAZH1	1SNK900102R0000		20	24.00
2	**Jumper bars**	1 poles	24 A	Grey	AD2.5	1SNA114205R2000		50	1.60
3	**Lateral jumper bars**	2 poles	35 A	Grey	PC6-2	1SNA113546R1400		10	2.00
		3 poles			PC6-3	1SNA116536R0500		10	2.00
		4 poles			PC6-4	1SNA116537R0600		10	3.00
		10 poles			PC6-10	1SNA113548R2600		10	8.00
4	**Insulating tips**	For lateral jumper bars type PC...			EIP	1SNA113550R2400		10	
5	**Test plugs**	DIA 2 mm 0.079 in		Black	FC2	1SNA007865R2600		100	
6	**Shield connectors**				CBD2S	1SNA178408R1400		50	
7	**Terminal block markers**	Blank card		White	RC610	1SNA233000R0100		1	7.50

Complete list of accessories is indicated in the terminal block datasheet.
Some accessories such as jumper bars may modify the terminal block's ratings: complete information in the accessories catalogue pages.

Technical data valid for copper conductors only.

1SNC160105S0201

Overview			252

Screw clamp technology

Component holder

4 mm² / 12 AWG	**M4/6.DE1.D**	With 2 diodes	253
	M4/6.DE1.D1	With 2 diodes	254
	M4/6.DE2.D	With 2 diodes	255
	M4/6.DD	With 1 diode	256
	M4/6.DD1	With 1 diode	257
	M4/6.DE	Open circuit	258
	M4/6.DE1	Open circuit	259
	M4/6.DE2	Open circuit	260

For 5 x 20 mm and 5 x 25 mm fuses

4 mm² / 12 AWG	**D4/8.D2.P.SF**		261
	D4/8.D2.P.SFL		262
	D4/8.D2.P.SFD		262

ADO-ADO technology

Component holder

1.5 mm²	**D1.5/6.ADO.D1**	With diode	263

1SNC160105S0201

13

Screw clamp technology

Component holder

Section IEC	UL/CSA								
4 mm²	12 AWG	M4/6.DE1.D 6 mm 0.236 in	M4/6.DE1.D1 6 mm 0.236 in	M4/6.DE2.D 6 mm 0.236 in	M4/6.DD 6 mm 0.236 in	M4/6.DD1 6 mm 0.236 in	M4/6.DE 6 mm 0.236 in	M4/6.DE1 6 mm 0.236 in	M4/6.DE2 6 mm 0.236 in

For 5 x 20 mm and 5 x 25 mm fuses

Section IEC	UL/CSA		
4 mm²	12 AWG	D4/8.D2.P.SF 8 mm 0.315 in	D4/8.D2.P.SFL 8 mm 0.315 in
			D4/8.D2.P.SFD 8 mm 0.315 in

ADO-ADO technology

Component holder

Section IEC	UL/CSA	
1.5 mm²		D1.5/6.ADO.D1 6 mm 0.236 in

1SNC160062S0201

M4/6.DE screw clamp terminal blocks
Component holder - 6 mm 0.236 in spacing

4 mm²

M4/6.DE

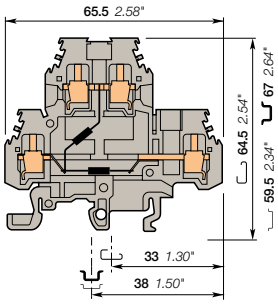

6 mm 0.236 in spacing

Description

Ease the test operation with two 1N4007 diodes.

Ordering details

Description		Color	Type	Part Number		Pkg pce	Weight (1 pce) g
Component holder	With two 1N4007 diodes, common on cathode (1000V peak-250V Service-1A)	Grey	M4/6.DE1.D	1SNA115371R2600		50	16.00

Main technical data

		IEC	UL	CSA
1 conductor per clamp	Rigid: Solid/Stranded	0.5-4 mm²		
	Flexible without ferrule	0.5-4 mm²		
	Flexible with insulated ferrule			
	Gauge	A4		
Rated current / Rated cross section		20 A / 4 mm²		
Rated short-time withstand current (1s)		480 A		
Rated voltage		500 V		
Impulse withstand voltage				
Protection		IP20	NEMA 1	

Mounting instructions

Rail	G32, TH 35-7.5, TH 35-15
Wire stripping length	8.5 mm 0.33 in
Tool	Flat screwdriver Ø 4 mm Ø 0.157 in
Torque	0.5 - 0.6 Nm 4.4 - 5.3 lb.in

The connecting capacity data for one Rigid: Solid/Stranded, or one Flexible conductor (when applicable) is a mandatory information required by IEC, UL and CSA standards (Copper conductors). All other data are provided as supplementary information only. For more details, please consult our CB, UL or CSA certificates and technical datasheet available on http://www.TE.com

CE RoHS Gost R

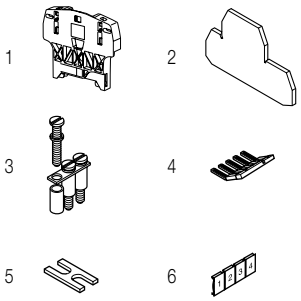

Accessories

	Description			Color	Type	Part Number		Pkg pce	Weight (1 pce) g
1	**End stops**	10 mm	0.394 in	Dark grey	BAZH1	1SNK900102R0000		20	24.00
2	**End sections**	1 mm	0.039 in	Grey	FEM6D	1SNA118499R2300		20	2.70
3	**Jumper bars**	2 poles	32 A		BJMI6D-2	1SNA179668R2000		10	4.00
		3 poles			BJMI6D-3	1SNA179669R2100		10	6.00
		4 poles			BJMI6D-4	1SNA179670R2600		10	8.00
		5 poles			BJMI6D-5	1SNA179671R1300		10	10.00
		10 poles			BJMI6D-10	1SNA179672R1400		10	20.00
4	**Lateral jumper bars**	10 poles	35 A		PC61-10	1SNA163311R2200		10	5.00
5	**Cross spacing jumpers**	5 mm 0.200 in - 6 mm 0.236 in - 8 mm 0.315 in			EL6	1SNA173627R2100		10	0.10
6	**Terminal block markers**	Blank card		White	RC610	1SNA233000R0100		1	7.50

Complete list of accessories is indicated in the terminal block datasheet.
Some accessories such as jumper bars may modify the terminal block's ratings: complete information in the accessories catalogue pages.

Technical data valid for copper conductors only.

M4/6.DE screw clamp terminal blocks
Component holder - 6 mm 0.236 in spacing

4 mm²

M4/6.DE

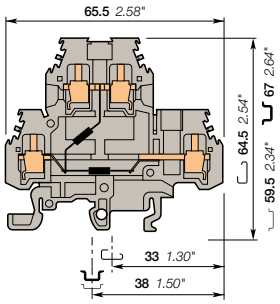

6 mm 0.236 in spacing

Description

Ease the test operation with two 1N4007 diodes.

Ordering details

Description		Color	Type	Part Number		Pkg pce	Weight (1 pce) g
Component holder	With two 1N4007 diodes, common on anode (1000V peak-250V Service-1A)	Grey	M4/6.DE1.D1	1SNA115591R0400		50	16.00

Main technical data

		IEC	UL	CSA
1 conductor per clamp	Rigid: Solid/Stranded	0.5-4 mm²		
	Flexible without ferrule	0.5-4 mm²		
	Flexible with insulated ferrule			
	Gauge	A4		
Rated current / Rated cross section		20 A / 4 mm²		
Rated short-time withstand current (1s)		480 A		
Rated voltage		500 V		
Impulse withstand voltage				
Protection		IP20	NEMA 1	

Mounting instructions

Rail	G32, TH 35-7.5, TH 35-15
Wire stripping length	8.5 mm 0.33 in
Tool	Flat screwdriver Ø 4 mm Ø 0.157 in
Torque	0.5 - 0.6 Nm 4.4 - 5.3 lb.in

The connecting capacity data for one Rigid: Solid/Stranded, or one Flexible conductor (when applicable) is a mandatory information required by IEC, UL and CSA standards (Copper conductors). All other data are provided as supplementary information only. For more details, please consult our CB, UL or CSA certificates and technical datasheet available on http://www.TE.com

CE RoHS Gost R

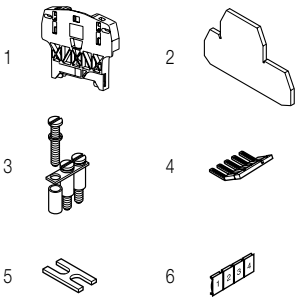

Accessories

	Description			Color	Type	Part Number		Pkg pce	Weight (1 pce) g
1	**End stops**	10 mm	0.394 in	Dark grey	BAZH1	1SNK900102R0000		20	24.00
2	**End sections**	1 mm	0.039 in	Grey	FEM6D	1SNA118499R2300		20	2.70
3	**Jumper bars**	2 poles	32 A		BJMI6D-2	1SNA179668R2000		10	4.00
		3 poles			BJMI6D-3	1SNA179669R2100		10	6.00
		4 poles			BJMI6D-4	1SNA179670R2600		10	8.00
		5 poles			BJMI6D-5	1SNA179671R1300		10	10.00
		10 poles			BJMI6D-10	1SNA179672R1400		10	20.00
4	**Lateral jumper bars**	10 poles	35 A		PC61-10	1SNA163311R2200		10	5.00
5	**Cross spacing jumpers**	5 mm 0.200 in - 6 mm 0.236 in - 8 mm 0.315 in			EL6	1SNA173627R2100		10	0.10
6	**Terminal block markers**	Blank card		White	RC610	1SNA233000R0100		1	7.50

Complete list of accessories is indicated in the terminal block datasheet.
Some accessories such as jumper bars may modify the terminal block's ratings: complete information in the accessories catalogue pages.

Technical data valid for copper conductors only.

M4/6.DE screw clamp terminal blocks
Component holder - 6 mm 0.236 in spacing

4 mm²

M4/6.DE

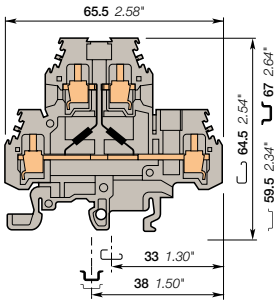

6 mm 0.236 in spacing

Description

Ease the test operation with two 1N4007 diodes.

Ordering details

Description		Color	Type	Part Number		Pkg pce	Weight (1 pce) g
Component holder	With two 1N4007 diodes, common on cathode (1000V peak-250V Service-1A)	Grey	M4/6.DE2.D	1SNA115327R1200		50	20.00

Main technical data

		IEC	UL	CSA
1 conductor per clamp	Rigid: Solid/Stranded	0.5-4 mm²		
	Flexible without ferrule	0.5-4 mm²		
	Flexible with insulated ferrule			
	Gauge	A4		
Rated current / Rated cross section		20 A / 4 mm²		
Rated short-time withstand current (1s)		480 A		
Rated voltage		500 V		
Impulse withstand voltage				
Protection		IP20	NEMA 1	

Mounting instructions

Rail	G32, TH 35-7.5, TH 35-15
Wire stripping length	8.5 mm 0.33 in
Tool	Flat screwdriver Ø 4 mm Ø 0.157 in
Torque	0.5 - 0.6 Nm 4.4 - 5.3 lb.in

The connecting capacity data for one Rigid: Solid/Stranded, or one Flexible conductor (when applicable) is a mandatory information required by IEC, UL and CSA standards (Copper conductors). All other data are provided as supplementary information only. For more details, please consult our CB, UL or CSA certificates and technical datasheet available on http://www.TE.com

CE RoHS Gost R

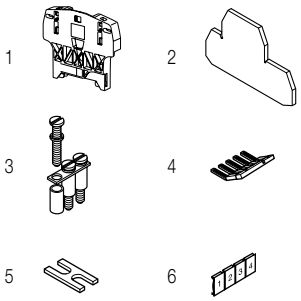

Accessories

	Description			Color	Type	Part Number		Pkg pce	Weight (1 pce) g
1	**End stops**	10 mm	0.394 in	Dark grey	BAZH1	1SNK900102R0000		20	24.00
2	**End sections**	1 mm	0.039 in	Grey	FEM6D	1SNA118499R2300		20	2.70
3	**Jumper bars**	2 poles	32 A		BJMI6D-2	1SNA179668R2000		10	4.00
		3 poles			BJMI6D-3	1SNA179669R2100		10	6.00
		4 poles			BJMI6D-4	1SNA179670R2600		10	8.00
		5 poles			BJMI6D-5	1SNA179671R1300		10	10.00
		10 poles			BJMI6D-10	1SNA179672R1400		10	20.00
4	**Lateral jumper bars**	10 poles	35 A		PC61-10	1SNA163311R2200		10	5.00
5	**Cross spacing jumpers**	5 mm 0.200 in - 6 mm 0.236 in - 8 mm 0.315 in			EL6	1SNA173627R2100		10	0.10
6	**Terminal block markers**	Blank card		White	RC610	1SNA233000R0100		1	7.50

Complete list of accessories is indicated in the terminal block datasheet.
Some accessories such as jumper bars may modify the terminal block's ratings: complete information in the accessories catalogue pages.

Technical data valid for copper conductors only.

M4/6.DD screw clamp terminal blocks
Component holder - 6 mm 0.236 in spacing

4 mm²
12 AWG

M4/6.DD

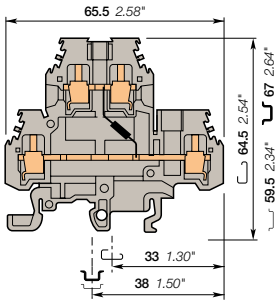

6 mm 0.236 in spacing

Description

Protect or test your circuit with one 1N4007 diodes.

Ordering details

Description		Color	Type	Part Number		Pkg pce	Weight (1 pce) g
Component holder	Cathode of the blocking diode connected to the lower circuit	Grey	M4/6.DD	1SNA115168R2300		50	20.00

Main technical data

		IEC	UL	CSA
1 conductor per clamp	Rigid: Solid/Stranded	0.2-4 mm²	22-12 AWG	18-12 AWG
	Flexible without ferrule	0.22-4 mm²		
	Flexible with insulated ferrule			
	Gauge			
Rated current / Rated cross section		20 A / 4 mm²	25 A / 12 AWG	25 A / 12 AWG
Rated short-time withstand current (1s)		480 A		
Rated voltage		500 V	600 V	150 V
Impulse withstand voltage				
Protection		IP20	NEMA 1	

Mounting instructions

Rail	G32, TH 35-7.5, TH 35-15
Wire stripping length	8.5 mm 0.33 in
Tool	Flat screwdriver Ø 4 mm Ø 0.157 in
Torque	0.5 - 0.6 Nm 4.4 - 5.3 lb.in

The connecting capacity data for one Rigid: Solid/Stranded, or one Flexible conductor (when applicable) is a mandatory information required by IEC, UL and CSA standards (Copper conductors). All other data are provided as supplementary information only. For more details, please consult our CB, UL or CSA certificates and technical datasheet available on http://www.TE.com

CE RoHS USR CSA Gost R

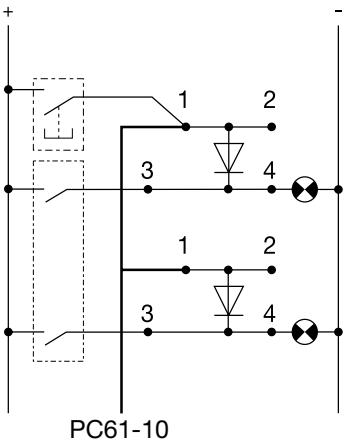

Typical lamp test application

Accessories

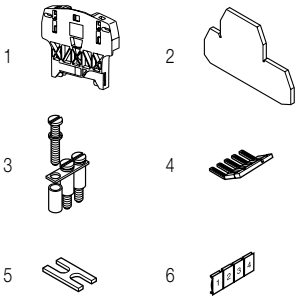

	Description			Color	Type	Part Number		Pkg pce	Weight (1 pce) g
1	**End stops**	10 mm	0.394 in	Dark grey	BAZH1	1SNK900102R0000		20	24.00
2	**End sections**	1 mm	0.039 in	Grey	FEM6D	1SNA118499R2300		20	2.70
3	**Jumper bars**	2 poles	32 A		BJMI6D-2	1SNA179668R2000		10	4.00
		3 poles			BJMI6D-3	1SNA179669R2100		10	6.00
		4 poles			BJMI6D-4	1SNA179670R2600		10	8.00
		5 poles			BJMI6D-5	1SNA179671R1300		10	10.00
		10 poles			BJMI6D-10	1SNA179672R1400		10	20.00
4	**Lateral jumper bars**	10 poles	35 A		PC61-10	1SNA163311R2200		10	5.00
5	**Cross spacing jumpers**	5 mm 0.200 in - 6 mm 0.236 in - 8 mm 0.315 in			EL6	1SNA173627R2100		10	0.10
6	**Terminal block markers**	Blank card		White	RC610	1SNA233000R0100		1	7.50

Complete list of accessories is indicated in the terminal block datasheet.
Some accessories such as jumper bars may modify the terminal block's ratings: complete information in the accessories catalogue pages.

Technical data valid for copper conductors only.

1SNC161133S0201 - Rev. A

M4/6.DD screw clamp terminal blocks
Component holder - 6 mm 0.236 in spacing

4 mm²
12 AWG

M4/6.DD

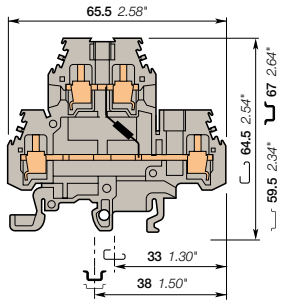

6 mm 0.236 in spacing

Description

Protect or test your circuit with one 1N4007 diodes.

Ordering details

Description		Color	Type	Part Number		Pkg pce	Weight (1 pce) g
Component holder	Cathode of the blocking diode connected to the upper circuit	Grey	M4/6.DD1	1SNA115184R0400		50	20.00

Main technical data

		IEC	UL	CSA
1 conductor per clamp	Rigid: Solid/Stranded	0.2-4 mm²	22-12 AWG	18-12 AWG
	Flexible without ferrule	0.22-4 mm²		
	Flexible with insulated ferrule			
	Gauge			
Rated current / Rated cross section		20 A / 4 mm²	25 A / 12 AWG	25 A / 12 AWG
Rated short-time withstand current (1s)		480 A		
Rated voltage		500 V	600 V	150 V
Impulse withstand voltage				
Protection		IP20	NEMA 1	

Mounting instructions

Rail	G32, TH 35-7.5, TH 35-15
Wire stripping length	8.5 mm 0.33 in
Tool	Flat screwdriver Ø 4 mm Ø 0.157 in
Torque	0.5 - 0.6 Nm 4.4 - 5.3 lb.in

The connecting capacity data for one Rigid: Solid/Stranded, or one Flexible conductor (when applicable) is a mandatory information required by IEC, UL and CSA standards (Copper conductors). All other data are provided as supplementary information only. For more details, please consult our CB, UL or CSA certificates and technical datasheet available on http://www.TE.com

CE RoHS USR CSA Gost R

Typical lamp test application

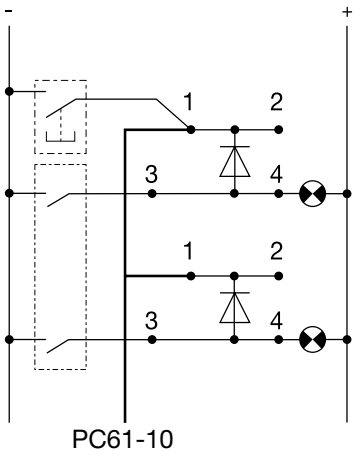

Accessories

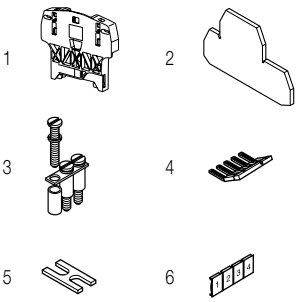

	Description			Color	Type	Part Number		Pkg pce	Weight (1 pce) g
1	**End stops**	10 mm	0.394 in	Dark grey	BAZH1	1SNK900102R0000		20	24.00
2	**End sections**	1 mm	0.039 in	Grey	FEM6D	1SNA118499R2300		20	2.70
3	**Jumper bars**	2 poles	32 A		BJMI6D-2	1SNA179668R2000		10	4.00
		3 poles			BJMI6D-3	1SNA179669R2100		10	6.00
		4 poles			BJMI6D-4	1SNA179670R2600		10	8.00
		5 poles			BJMI6D-5	1SNA179671R1300		10	10.00
		10 poles			BJMI6D-10	1SNA179672R1400		10	20.00
4	**Lateral jumper bars**	10 poles	35 A		PC61-10	1SNA163311R2200		10	5.00
5	**Cross spacing jumpers**	5 mm 0.200 in - 6 mm 0.236 in - 8 mm 0.315 in			EL6	1SNA173627R2100		10	0.10
6	**Terminal block markers**	Blank card		White	RC610	1SNA233000R0100		1	7.50

Complete list of accessories is indicated in the terminal block datasheet.
Some accessories such as jumper bars may modify the terminal block's ratings: complete information in the accessories catalogue pages.

Technical data valid for copper conductors only.

M4/6.DE screw clamp terminal blocks
Component holder - 6 mm 0.236 in spacing

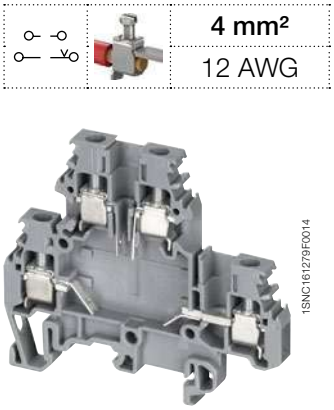

M4/6.DE

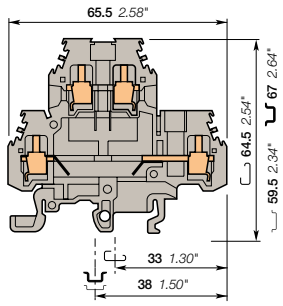

6 mm 0.236 in spacing

	4 mm²
	12 AWG

Description

Customize yourself the double deck terminal blocks by soldering electronic components (thickness 5 mm 0.200 in max).

Ordering details

Description	Color	Type	Part Number		Pkg pce	Weight (1 pce) g
Component holder Upper and lower circuit opened	Grey	M4/6.DE	1SNA115185R0500		50	20.00

Main technical data

		IEC	UL	CSA
1 conductor per clamp	Rigid: Solid/Stranded	0.5-4 mm²	22-12 AWG	22-12 AWG
	Flexible without ferrule	0.5-4 mm²		
	Flexible with insulated ferrule			
	Gauge	A4		
Rated current / Rated cross section		26 A / 4 mm²	20 A / 12 AWG	20 A / 12 AWG
Rated short-time withstand current (1s)		480 A		
Rated voltage		500 V	600 V	300 V
Impulse withstand voltage				
Protection		IP20	NEMA 1	

Mounting instructions

Rail	G32, TH 35-7.5, TH 35-15
Wire stripping length	8.5 mm 0.33 in
Tool	Flat screwdriver Ø 4 mm Ø 0.157 in
Torque	0.5 - 0.6 Nm 4.4 - 5.3 lb.in

The connecting capacity data for one Rigid: Solid/Stranded, or one Flexible conductor (when applicable) is a mandatory information required by IEC, UL and CSA standards (Copper conductors). All other data are provided as supplementary information only. For more details, please consult our CB, UL or CSA certificates and technical datasheet available on http://www.TE.com

CE RoHS USR CSA Gost R

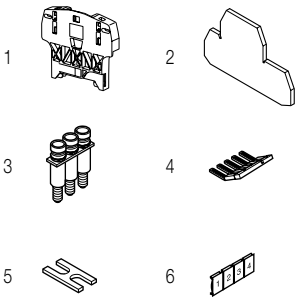

Accessories

	Description			Color	Type	Part Number		Pkg pce	Weight (1 pce) g
1	**End stops**	10 mm	0.394 in	Dark grey	BAZH1	1SNK900102R0000		20	24.00
2	**End sections**	1 mm	0.039 in	Grey	FEM6D	1SNA118499R2300		20	2.70
3	**Jumper bars**	2 poles	32 A		BJMI6D-2	1SNA179668R2000		10	4.00
		3 poles			BJMI6D-3	1SNA179669R2100		10	6.00
		4 poles			BJMI6D-4	1SNA179670R2600		10	8.00
		5 poles			BJMI6D-5	1SNA179671R1300		10	10.00
		10 poles			BJMI6D-10	1SNA179672R1400		10	20.00
4	**Lateral jumper bars**	10 poles	35 A		PC61-10	1SNA163311R2200		10	5.00
5	**Cross spacing jumpers**	5 mm 0.200 in - 6 mm 0.236 in - 8 mm 0.315 in			EL6	1SNA173627R2100		10	0.10
6	**Terminal block markers**	Blank card		White	RC610	1SNA233000R0100		1	7.50

Complete list of accessories is indicated in the terminal block datasheet.
Some accessories such as jumper bars may modify the terminal block's ratings: complete information in the accessories catalogue pages.

Technical data valid for copper conductors only.

M4/6.DE screw clamp terminal blocks
Component holder - 6 mm 0.236 in spacing

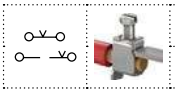

4 mm²
12 AWG

M4/6.DE

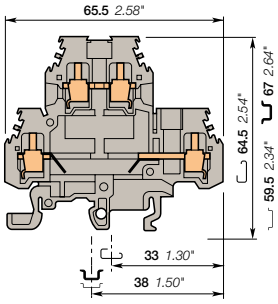

6 mm 0.236 in spacing

Description

Customize yourself the double deck terminal blocks by soldering electronic components (thickness 5 mm 0.200 in max).

Ordering details

Description	Color	Type	Part Number		Pkg pce	Weight (1 pce) g
Component holder Lower circuit opened	Grey	M4/6.DE1	1SNA115177R1400		50	20.00

Main technical data

		IEC	UL	CSA
1 conductor per clamp	Rigid: Solid/Stranded	0.5-4 mm²	22-12 AWG	22-12 AWG
	Flexible without ferrule	0.5-4 mm²		
	Flexible with insulated ferrule			
	Gauge	A4		
Rated current / Rated cross section		26 A / 4 mm²	20 A / 12 AWG	20 A / 12 AWG
Rated short-time withstand current (1s)		480 A		
Rated voltage		500 V	600 V	300 V
Impulse withstand voltage				
Protection		IP20	NEMA 1	

The connecting capacity data for one Rigid: Solid/Stranded, or one Flexible conductor (when applicable) is a mandatory information required by IEC, UL and CSA standards (Copper conductors). All other data are provided as supplementary information only. For more details, please consult our CB, UL or CSA certificates and technical datasheet available on http://www.TE.com

CE RoHS USR CSA Gost R

Mounting instructions

Rail	G32, TH 35-7.5, TH 35-15
Wire stripping length	8.5 mm 0.33 in
Tool	Flat screwdriver Ø 4 mm Ø 0.157 in
Torque	0.5 - 0.6 Nm 4.4 - 5.3 lb.in

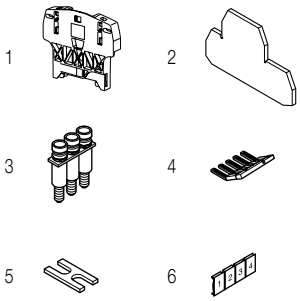

Accessories

	Description			Color	Type	Part Number		Pkg pce	Weight (1 pce) g
1	**End stops**	10 mm	0.394 in	Dark grey	BAZH1	1SNK900102R0000		20	24.00
2	**End sections**	1 mm	0.039 in	Grey	FEM6D	1SNA118499R2300		20	2.70
3	**Jumper bars**	6 mm	32 A		BJMI6D-2	1SNA179668R2000		10	4.00
					BJMI6D-3	1SNA179669R2100		10	6.00
					BJMI6D-4	1SNA179670R2600		10	8.00
					BJMI6D-5	1SNA179671R1300		10	10.00
					BJMI6D-10	1SNA179672R1400		10	20.00
4	**Lateral jumper bars**	10 poles	35 A		PC61-10	1SNA163311R2200		10	5.00
5	**Cross spacing jumpers**	5 mm 0.200 in - 6 mm 0.236 in - 8 mm 0.315 in			EL6	1SNA173627R2100		10	0.10
6	**Terminal block markers** Blank card			White	RC610	1SNA233000R0100		1	7.50

Complete list of accessories is indicated in the terminal block datasheet.
Some accessories such as jumper bars may modify the terminal block's ratings: complete information in the accessories catalogue pages.

Technical data valid for copper conductors only.

M4/6.DE screw clamp terminal blocks
Component holder - 6 mm 0.236 in spacing

4 mm²
12 AWG

M4/6.DE

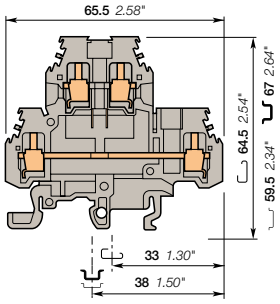

6 mm 0.236 in spacing

Description

Customize yourself the double deck terminal blocks by soldering electronic components (thickness 5 mm 0.200 in max).

Ordering details

Description	Color	Type	Part Number		Pkg pce	Weight (1 pce) g
Component holder Upper circuit opened	Grey	M4/6.DE2	1SNA115326R1100		50	20.00

Main technical data

		IEC	UL	CSA
1 conductor per clamp	Rigid: Solid/Stranded	0.5-4 mm²		22-12 AWG
	Flexible without ferrule	0.5-4 mm²		
	Flexible with insulated ferrule			
	Gauge	A4		
Rated current / Rated cross section		26 A / 4 mm²		20 A / 12 AWG
Rated short-time withstand current (1s)		480 A		
Rated voltage		500 V		300 V
Impulse withstand voltage				
Protection		IP20	NEMA 1	

Mounting instructions

Rail	G32, TH 35-7.5, TH 35-15
Wire stripping length	8.5 mm 0.33 in
Tool	Flat screwdriver Ø 4 mm Ø 0.157 in
Torque	0.5 - 0.6 Nm 4.4 - 5.3 lb.in

The connecting capacity data for one Rigid: Solid/Stranded, or one Flexible conductor (when applicable) is a mandatory information required by IEC, UL and CSA standards (Copper conductors). All other data are provided as supplementary information only. For more details, please consult our CB, UL or CSA certificates and technical datasheet available on http://www.TE.com

CE | RoHS | CSA | Gost R

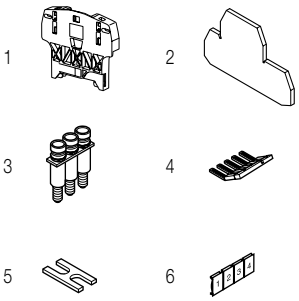

Accessories

	Description			Color	Type	Part Number		Pkg pce	Weight (1 pce) g
1	**End stops**	10 mm	0.394 in	Dark grey	BAZH1	1SNK900102R0000		20	24.00
2	**End sections**	1 mm	0.039 in	Grey	FEM6D	1SNA118499R2300		20	2.70
3	**Jumper bars**	2 poles	32 A		BJMI6D-2	1SNA179668R2000		10	4.00
		3 poles			BJMI6D-3	1SNA179669R2100		10	6.00
		4 poles			BJMI6D-4	1SNA179670R2600		10	8.00
		5 poles			BJMI6D-5	1SNA179671R1300		10	10.00
		10 poles			BJMI6D-10	1SNA179672R1400		10	20.00
4	**Lateral jumper bars**	10 poles	35 A		PC61-10	1SNA163311R2200		10	5.00
5	**Cross spacing jumpers**	5 mm 0.200 in - 6 mm 0.236 in - 8 mm 0.315 in			EL6	1SNA173627R2100		10	0.10
6	**Terminal block markers**	Blank card		White	RC610	1SNA233000R0100		1	7.50

Complete list of accessories is indicated in the terminal block datasheet.
Some accessories such as jumper bars may modify the terminal block's ratings: complete information in the accessories catalogue pages.

Technical data valid for copper conductors only.

D4/8.D2.P.SF screw clamp terminal blocks

For 5 x 20 and 5 x 25 fuses - 8 mm 0.315 in spacing

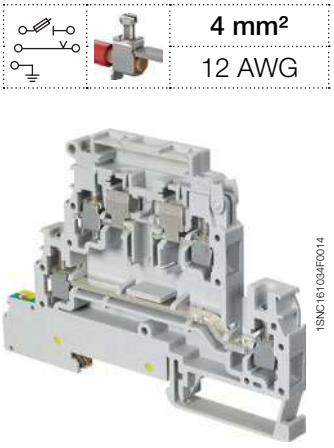

4 mm²	
12 AWG	

1SNC161034F0014

D4/8.D2.P.SF

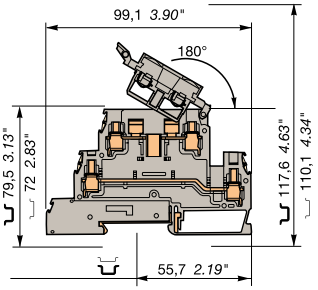

8 mm 0.315 in spacing

Description

- Protect your circuits with 5 x 20 and 5 x 25 fuse terminal blocks (fuse not supplied with terminal blocks),
- Save space with double deck terminal blocks: 2 independent circuits 1 fuse on upper deck + 1 feed-through + 1 ground.

Ordering details

Description	Color	Type	Part Number		Pkg qty	Weight (1 pce) g
Fuse	Grey	D4/8.D2.P.SF	1SNA400270R2000		25	35.00

Main technical data

Connecting capacity		IEC	UL	CSA
1 conductor per clamp	Rigid: Solid/Stranded	0.5-6 mm²	20-12 AWG	20-12 AWG
	Flexible without ferrule	0.5-4 mm²		
	Flexible with insulated ferrule			
	Gauge	A4		
Rated current / Rated cross section		6.3 A / 4 mm²	6.3 A / 12 AWG	6.3 A / 12 AWG
Rated short-time withstand current (1s)				
Rated voltage		300 V	300 V	300 V
Impulse withstand voltage		6000 V		
Protection		IP20	NEMA 1	

Mounting instructions

Rail	TH 35-7.5, TH 35-15
Wire stripping length	9.5 mm 0.37 in
Tool	Flat screwdriver Ø 4 mm Ø 0.157 in
Torque	0.5 - 0.8 N.m 4.4 - 7.1 lb.in

The connecting capacity data for one Rigid: Solid/Stranded, or one Flexible conductor (when applicable) is a mandatory information required by IEC, UL and CSA standards (Copper conductors). All other data are provided as supplementary information only. For more details, please consult our CB, UL or CSA certificates and technical datasheet available on http://www.TE.com

CE RoHS USR CSA Gost R

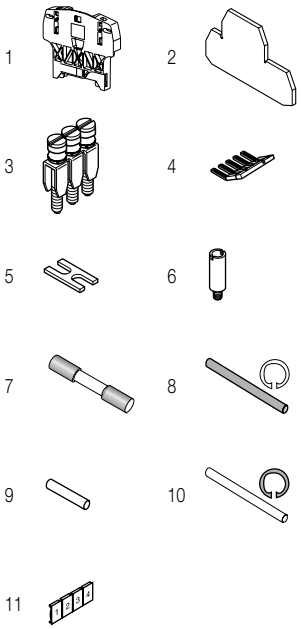

Accessories

	Description			Color	Type	Part Number		Pkg qty	Weight (1 pce) g
1	End stops	10 mm	0.394 in	Dark grey	BAZH1	1SNK900102R0000		20	24.00
2	End sections	1.5 mm	0.059 in	Grey	FEM8D2S1	1SNA400273R1700		20	4.60
3	Jumper bars	2 poles	41 A		BJM8	1SNA168520R0500		10	5.00
		3 poles				1SNA168521R2200		10	7.00
		4 poles				1SNA168522R2300		10	9.50
		10 poles				1SNA168974R0000		10	23.70
4	Lateral jumper bars	10 poles	35 A		PC81-10	1SNA173523R1100		10	5.00
5	Cross spacing jumpers	5 mm 0.200 in - 6 mm 0.236 in - 8 mm 0.315 in			EL6	1SNA173627R2100		10	0.10
6	Test sockets	DIA 2 mm 0.079 in			AL2	1SNA163043R2100		50	0.90
		DIA 4 mm 0.157 in			AL4-M3	1SNA206721R0100		50	1.10
7	Fuses	0.5 A			FU520	1SNA008288R1500		10	
		1 A				1SNA008290R1300		10	
		2 A				1SNA008291R0000		10	
8	Assembly rods	2 poles			TGA8	1SNA168672R1100		10	1.00
		3 poles				1SNA168673R1200		10	
		4 poles				1SNA168674R1300		10	
9	Neutral cartridges				CN5	1SNA179371R1600		10	3.90
10	Spring retaining rings				ANT	1SNA168675R1400		10	
11	Terminal block markers	Blank card		White	RC810	1SNA234000R0200		1	8.20

Complete list of accessories is indicated in the terminal block datasheet.
Some accessories such as jumper bars may modify the terminal block's ratings: complete information in the accessories catalogue pages.

Technical data valid for copper conductors only.

D4/8.D2.P.SF screw clamp terminal blocks

For 5 x 20 and 5 x 25 fuses - with blown fuse indicator - 8 mm 0.315 in spacing

4 mm²
12 AWG

D4/8.D2.P.SF

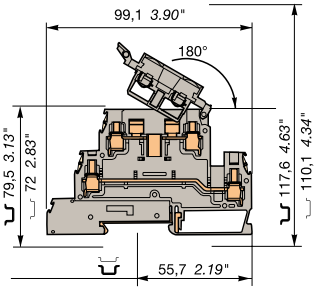

8 mm 0.315 in spacing

Description

- Protect your circuits with 5 x 20 and 5 x 25 fuse terminal blocks (fuse not supplied with terminal blocks),
- Save space with double deck terminal blocks: 2 independent circuits 1 fuse on upper deck + 1 feed-through + 1 ground,
- Quickly identify the defective circuit thanks to the blown fuse indicator.

Ordering details

Description		Color	Type	Part Number		Pkg qty	Weight (1 pce) g
Fuse	With blown fuse indicator by neon 110-230 V AC	Grey	D4/8.D2.P.SFL	1SNA400271R1500		25	35.00
	With blown fuse indicator by LED 24-60 V DC / 110 V AC	Grey	D4/8.D2.P.SFD	1SNA400272R1600		25	35.00

Main technical data

Connecting capacity		IEC	UL	CSA
1 conductor per clamp	Rigid: Solid/Stranded	0.5-6 mm²	20-12 AWG	20-12 AWG
	Flexible without ferrule	0.5-4 mm²		
	Flexible with insulated ferrule			
	Gauge	A4		
Rated current / Rated cross section		6.3 A / 4 mm²	6.3 A / 12 AWG	6.3 A / 12 AWG
Rated short-time withstand current (1s)				
Rated voltage		300 V	300 V	300 V
Impulse withstand voltage		6000 V		
Protection		IP20	NEMA 1	

Mounting instructions

Rail		TH 35-7.5, TH 35-15
Wire stripping length		9.5 mm 0.37 in
Tool		Flat screwdriver Ø 4 mm Ø 0.157 in
Torque		0.5 - 0.8 N.m 4.4 - 7.1 lb.in

The connecting capacity data for one Rigid: Solid/Stranded, or one Flexible conductor (when applicable) is a mandatory information required by IEC, UL and CSA standards (Copper conductors). All other data are provided as supplementary information only. For more details, please consult our CB, UL or CSA certificates and technical datasheet available on http://www.TE.com

CE RoHS USR CSA Gost R

Notes

Blocks with LED indicator are labeled "+" on the outside of the lever. The indicator can be reversed in the field if required.
Leakage current D4/8.D2.P.SFL: 110 V: < 0.5 mA / 230 V: < 0.7 mA
Leakage current D4/8.D2.P.SFD: 24 V: < 0.5 mA / 110 V: < 2.2 mA

Accessories

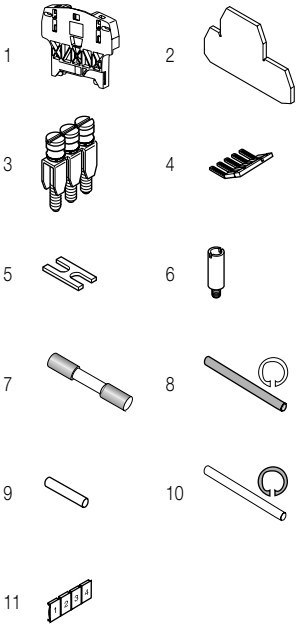

	Description			Color	Type	Part Number		Pkg qty	Weight (1 pce) g
1	**End stops**	12 mm	0.472 in	Grey	BAZH1	1SNK900102R0000		50	24.00
2	**End sections**	1.5 mm	0.059 in	Grey	FEM8D2S1	1SNA400273R1700		20	4.60
3	**Jumper bars**	2 poles	41 A		BJM8	1SNA168520R0500		10	5.00
		3 poles				1SNA168521R2200		10	7.00
		4 poles				1SNA168522R2300		10	9.50
		10 poles				1SNA168974R0000		10	23.70
4	**Lateral jumper bars**	10 poles	35 A		PC81-10	1SNA173523R1100		10	5.00
5	**Cross spacing jumpers**	5 mm 0.200 in - 6 mm 0.236 in - 8 mm 0.315 in			EL6	1SNA173627R2100		10	0.10
6	**Test sockets**	DIA 2 mm 0.079 in			AL2	1SNA163043R2100		50	0.90
		DIA 4 mm 0.157 in			AL4-M3	1SNA206721R0100		50	1.10
7	**Fuses**	0.5 A			FU520	1SNA008288R1500		10	
		1 A				1SNA008290R1300		10	
		2 A				1SNA008291R0000		10	
8	**Assembly rods**	2 poles			TGA8	1SNA168672R1100		10	1.00
		3 poles				1SNA168673R1200		10	
		4 poles				1SNA168674R1300		10	
9	**Neutral cartridges**				CN5	1SNA179371R1600		10	3.90
10	**Spring retaining rings**				ANT	1SNA168675R1400		10	
11	**Terminal block markers**	Blank card		White	RC810	1SNA234000R0200		1	8.20

Complete list of accessories is indicated in the terminal block datasheet.
Some accessories such as jumper bars may modify the terminal block's ratings: complete information in the accessories catalogue pages.

Technical data valid for copper conductors only.

D1.5/6.ADO.D IDC terminal blocks

Component holder ADO-ADO - 6 mm 0.236 in spacing

1.5 mm²

D1.5/6.ADO.D

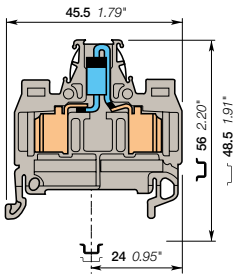

6 mm 0.236 in spacing

Description

- Terminal blocks with built-in 1N5408 diode,
- With the TE Connectivity ADO System®, experience the fastest and most reliable connection on the market,
- Designed for control applications exposed to severe constrains (vibrations, shocks, corrosion etc.),
- Up to 2 wires per connection.

Ordering details

Description		Color	Type	Part Number		Pkg pce	Weight (1 pce) g
Component holder	With diode (cathode on the right)	Grey	D1.5/6.ADO.D1	1SNA199248R1000		50	7.00

Main technical data

		IEC	UL	CSA
ADO	Rigid: Solid/Stranded	0.34-1.5 mm²		
	Flexible without ferrule	0.34-1.5 mm²		
Screw clamp	Rigid: Solid/Stranded			
	Flexible without ferrule			
	Flexible with insulated ferrule			
	Gauge			
Rated current / Rated cross section		1 A / 1.5 mm²		
Rated short-time withstand current (1s)		180 A		
Rated voltage		80 V		
Impulse withstand voltage				
Protection		IP20	NEMA 1	

Mounting instructions

Rail		TH 35-7.5, TH 35-15
Wire stripping length		
Tool		
Torque		

The connecting capacity data for one Rigid: Solid/Stranded, or one Flexible conductor (when applicable) is a mandatory information required by IEC, UL and CSA standards (Copper conductors). All other data are provided as supplementary information only. For more details, please consult our CB, UL or CSA certificates and technical datasheet available on http://www.TE.com

RoHS RoHS Gost R

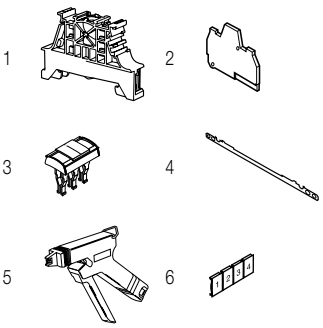

Accessories

	Description			Color	Type	Part Number		Pkg pce	Weight (1 pce) g
1	**End stops**	10 mm	0.394 in	Dark grey	BAM4	1SNK900001R0000		50	14.00
		5.2 mm	0.205 in		BAZ1	1SNK900002R0000		50	5.30
2	**End sections**	3 mm	0.118 in	Grey	FEMAD3	1SNA199341R0500		20	2.50
3	**Jumper bars**	2 poles	17.5 A	Orange	BJADO6-2	1SNA205974R0600		20	1.00
		3 poles			BJADO6-3	1SNA205975R0700		20	1.00
		10 poles			BJADO6-10	1SNA205982R2700		10	6.00
4	**Shield connectors**				CBM5	1SNA178745R1400		50	
5	**Tools**	Semi automatic tool			OUPAD	1SNA178944R0400		1	205.00
		Hand tool			OUMAD	1SNA179466R0600		1	29.00
6	**Terminal block markers**	Blank card		White	RC610	1SNA233000R0100		1	7.50

Complete list of accessories is indicated in the terminal block datasheet.
Some accessories such as jumper bars may modify the terminal block's ratings: complete information in the accessories catalogue pages.

Technical data valid for copper conductors only.

Index

Part number classification

Order code	Type	Page
1SNA007865R2600	FC2	19
1SNA008288R1500	FU520	34
1SNA008289R1600	FU520	34
1SNA008290R1300	FU520	34
1SNA008291R0000	FU520	34
1SNA008292R0100	FU520	34
1SNA094302R2100	CPFT2	176
1SNA094303R2200	CPFT3	176
1SNA094304R2300	CPFT4	176
1SNA094310R2400	CPFT10	176
1SNA094352R2200	CPFTR-2	176
1SNA094353R2300	CPFTR-3	176
1SNA094354R2400	CPFTR-4	176
1SNA094360R0600	CPFTR-10	176
1SNA103189R2600	SCD	214
1SNA103588R2600	SCFT1	167
1SNA103619R0400	SCFEX1	239
1SNA103620R0100	SCFEX3	112
1SNA103672R0100	SCF9	101
1SNA105028R2100	DCB	182
1SNA105141R2700	M8.STP	168
1SNA105142R2000	M8.STP	168
1SNA105265R0300	MS6	112
1SNA107239R0300	FC2.MC	53
1SNA110106R2500	DR1.4	114
1SNA110251R0500	DR6	117
1SNA110264R0200	D6.LNTP1	217
1SNA110269R1700	D6.LNTP3	218
1SNA110327R2100	D6.LNTP2	219
1SNA110328R0200	D6.LNTP4	221
1SNA110331R2500	D6.LNTP6	223
1SNA110332R2600	D6.LNTP7	222
1SNA110333R2700	D6.LNTP8	220
1SNA110368R1200	DR8.SF	121
1SNA110415R1200	D6.A.NTLP	224
1SNA110418R2500	D6.A.LLP	225
1SNA110439R2200	D6.NTLP	213
1SNA110440R0700	D6.NLP	214
1SNA110441R2400	D6.LLP	215
1SNA110442R2500	D6.LL	216
1SNA110491R1700	DR6.1	118
1SNA112086R0200	DR1.5.1	116
1SNA112098R1600	DR2.5.S1	120
1SNA113067R1700	FEM9	101
1SNA113137R0200	FEMT1	167
1SNA113542R1000	PC5-2	17
1SNA113544R1200	PC5-10	17
1SNA113546R1400	PC6-2	18
1SNA113548R2600	PC6-10	18
1SNA113550R2400	EIP	17
1SNA113629R2700	FEMT2	157
1SNA113689R2400	ECP26	84
1SNA113690R2100	ECP31	85
1SNA113691R1600	ECP35	86
1SNA113692R1700	ECP42	87
1SNA113762R2400	PEP	84
1SNA113885R0100	FEMS6	112
1SNA114117R0700	SCFD	213
1SNA114195R0600	FEMS8	113
1SNA114205R2000	AD2.5	66
1SNA114328R2200	FEMT3	165
1SNA114329R2300	BNT2	165
1SNA114434R0500	FEMR10	65
1SNA114522R0500	SCFT2	157
1SNA114778R0500	FEMT4	162
1SNA114825R0500	SCFM6	66
1SNA114836R0000	BAMH	84
1SNA115139R1600	M26.AF	88
1SNA115140R2300	M26.FF	84
1SNA115141R1000	M26.F	92
1SNA115142R1100	M31.AF	89
1SNA115143R1200	M31.FF	85
1SNA115144R1300	M31.F	93
1SNA115145R1400	M35.AF	90
1SNA115146R1500	M35.FF	86
1SNA115147R1600	M35.F	94
1SNA115148R2700	M42.AF	91
1SNA115149R2000	M42.FF	87
1SNA115150R2500	M42.F	95
1SNA115168R2300	M6.DD	256
1SNA115177R1400	M6.DE1	259
1SNA115184R0400	M6.DD1	257
1SNA115185R0500	M6.DE	258
1SNA115201R2500	M9.EE	101
1SNA115206R2200	MTC6	197
1SNA115229R2000	M6.SNTS	66
1SNA115236R1700	M8.ST	157
1SNA115237R1000	M8.ST1	158
1SNA115239R2200	M8.ST3	160
1SNA115243R2600	M8.ST7	157
1SNA115262R2100	M12.FF	102
1SNA115263R2200	M12.FF	102
1SNA115265R2400	MS6	112
1SNA115277R2000	M8.STP	168
1SNA115278R0100	MS8	113
1SNA115313R1400	M6.ST.Sn	165
1SNA115314R1500	M6.ST.Au	165
1SNA115320R2700	M10.RS	65
1SNA115326R1100	M6.DE2	260
1SNA115327R1200	M6.DE2.D	255
1SNA115359R0200	M8.STA	162
1SNA115371R2600	M6.DE1.D	253
1SNA115500R2500	M8.STP3	167
1SNA115510R1600	DR1.5	115
1SNA115511R0300	M12.FF	102
1SNA115529R1500	M8.STP1	167
1SNA115537R0500	D2.6.DL	195
1SNA115539R1700	M10.ST-Sn	166
1SNA115541R1100	D2.6.DA	193
1SNA115542R1200	D2.6.D	194
1SNA115547R1700	D2.6.DAL2	196
1SNA115591R0400	M6.DE1.D1	254
1SNA115626R1600	M13.FF	103
1SNA115627R1700	M13.FF.1	104
1SNA115643R2700	D2.6.DPA1	192
1SNA115678R0200	M8.STP.RS	67
1SNA115685R1200	M8.RS	64
1SNA115831R0400	D8.ST1.RS.IP20	69
1SNA115914R0700	D8.ST.RS	68
1SNA115928R1500	D10.SNBTB1	163
1SNA115929R1600	D10.SNBTB2	164
1SNA115930R1300	M6.RS	63
1SNA115971R1000	M8.ST1.IP20	159
1SNA116536R0500	PC6-3	112
1SNA116537R0600	PC6-4	112
1SNA116538R1700	PC8-2	20
1SNA116539R1000	PC8-3	113
1SNA116540R2500	PC8-4	113
1SNA116713R1600	FEM12F	102
1SNA116771R2000	FED3E	192
1SNA116781R1300	FEMT5	166
1SNA116783R1500	CVABM1	166
1SNA116795R1100	SCFCV1-2	112
1SNA116951R1500	FEM8S	121
1SNA116964R1200	FED6	213
1SNA116965R1300	FEDA6	224
1SNA116977R1700	FEM13F	103
1SNA116979R2100	FEMSTA	162
1SNA116987R0200	FEMR8	63
1SNA116991R0600	FEMR8T	67
1SNA117318R2300	FEDR5	115
1SNA117600R0300	FEDR61	117
1SNA117668R0200	FEDR51	120
1SNA118368R1600	FEM6	66
1SNA118499R2300	FEM6D	253
1SNA118707R0300	SCF6	66
1SNA120251R0700	DR6.N	117
1SNA120491R1100	DR6.1.N	118
1SNA125117R0200	M6.NT	227
1SNA125119R1400	M8.NT	228
1SNA125121R0600	M10.NT	229
1SNA125358R0300	M16.NT	231
1SNA125487R0600	MA2.5.NT	226
1SNA125593R0000	M12.NT1	230
1SNA125711R1500	MA2.5-2CPE	178
1SNA125930R1500	M6.N.RS	63
1SNA125961R1000	MA2.5.D2-2CPE	180
1SNA128035R1600	VRB3	226
1SNA128361R0100	VRB6	230
1SNA146227R2500	MTC6.Ex	197
1SNA160496R2600	DR6.P	117
1SNA163043R2100	AL2	63
1SNA163155R2600	REH3	105
1SNA163181R1100	PT101	65
1SNA163311R2200	PC61-10	31
1SNA163313R2400	PC8-10	20
1SNA163315R2600	PC10-10	166
1SNA163394R2600	VSJ11	65
1SNA163403R2000	CPP263	84
1SNA163409R0600	CPP313	85
1SNA163418R2600	CPP353	86
1SNA163424R1400	CPP423	87
1SNA163860R0500	SFB1	213
1SNA164406R2400	BO3	213
1SNA164581R1300	BJS8	68
1SNA164582R1400	BJS8	68
1SNA164583R1500	BJS8	68
1SNA164585R1700	BJS10	65
1SNA164586R1000	BJS10	65
1SNA164587R1100	BJS10	65
1SNA164588R2200	BJS10	65
1SNA165575R2500	M16.PE.N	241
1SNA165680R0300	M12.PE.N	240
1SNA165683R2200	M10.PE.N	239
1SNA167224R2700	BJS13-10	103
1SNA167319R0600	AL2	213
1SNA167674R0200	CBD5	120
1SNA167860R0100	FC4	19
1SNA167908R0600	PC51-10	115
1SNA167927R1000	FC4-1	68
1SNA168201R1200	CPP262	84
1SNA168202R1300	CPP261	84
1SNA168203R1400	CPP312	85
1SNA168204R1500	CPP311	85
1SNA168205R1600	CPP352	86
1SNA168206R1700	CPP351	86
1SNA168207R1000	CPP422	87
1SNA168208R2100	CPP421	87
1SNA168273R1100	BJS10	65
1SNA168401R0300	EV8S	157
1SNA168520R0500	BJM8	261
1SNA168521R2200	BJM8	261
1SNA168522R2300	BJM8	261
1SNA168672R1100	TGA8	34
1SNA168673R1200	TGA8	34
1SNA168674R1300	TGA8	34
1SNA168675R1400	ANT	34

Index
Part number classification

Order code	Type	Page
1SNA168956R0600	SFB2	213
1SNA168974R0000	BJM8	261
1SNA173016R1000	SCDR61	114
1SNA173058R0200	DCV	226
1SNA173059R0300	DCJ	112
1SNA173060R0000	DCO	113
1SNA173181R1300	PSC	165
1SNA173217R2600	BJM62	117
1SNA173218R0700	BJM62	117
1SNA173219R0000	BJM62	117
1SNA173221R2200	BJM62	213
1SNA173226R2700	BJM62	117
1SNA173523R1100	PC81-10	33
1SNA173627R2100	EL6	20
1SNA173660R1600	COCF 32	176
1SNA173815R1600	BJS9.5-2	101
1SNA173816R1700	BJS9.5-3	101
1SNA173817R1000	BJS9.5-4	101
1SNA173819R2200	BJS9.5-10	101
1SNA173888R2000	BP8.A4	64
1SNA173906R2200	BRC-1	165
1SNA173907R2300	BRC-1.5	165
1SNA173908R0400	BRC-2.5	165
1SNA174393R2000	BJS12.5-2	102
1SNA174394R2100	BJS12.5-3	102
1SNA174395R2200	BJS12.5-5	102
1SNA174396R2300	BJS12.5-10	102
1SNA174558R0500	BRC-0.5	165
1SNA174601R0100	BRC-4	165
1SNA174781R2500	BJDP4	63
1SNA174789R0500	BJS8-20	68
1SNA175263T0600	ECR-3	102
1SNA176278R1600	BJMI5-2	17
1SNA176279R1700	BJMI5-3	17
1SNA176280R0500	BJMI5-4	17
1SNA176281R2200	BJMI5-5	17
1SNA176282R2300	BJMI5-10	17
1SNA176663R0000	BJMI6-2	18
1SNA176664R0100	BJMI6-3	18
1SNA176665R0200	BJMI6-4	18
1SNA176666R0300	BJMI6-5	18
1SNA176667R0400	BJMI6-10	18
1SNA176669R1600	BJMI8-2	20
1SNA176670R1300	BJMI8-3	20
1SNA176671R0000	BJMI8-4	20
1SNA176672R0100	BJMI8-5	20
1SNA176673R0200	BJMI8-10	20
1SNA176675R0400	BJMI10-2	166
1SNA176676R0500	BJMI10-3	166
1SNA176677R0600	BJMI10-4	166
1SNA176678R1700	BJMI10-5	166
1SNA176679R1000	BJMI10-10	166
1SNA176704R0200	BJMI5DR	115
1SNA176705R0300	BJMI5DR	115
1SNA176706R0400	BJMI5DR	115
1SNA176708R1600	BJMI5DR	115
1SNA176816R1200	CPV1-2	112
1SNA177652R0600	BJS5-20	116
1SNA177654R0000	BJS10-20	65
1SNA177812R1700	EL61	192
1SNA178024R2500	BJD6	192
1SNA178025R2600	BJD6	192
1SNA178026R2700	BJD6	192
1SNA178027R2000	BJD6	192
1SNA178032R2500	BJD6	192
1SNA178033R2600	BJD6	192
1SNA178408R1400	CBD2S	27
1SNA178745R1400	CBM5	17
1SNA178944R0400	OUPAD	17

Order code	Type	Page
1SNA179371R1600	CN5	121
1SNA179466R0600	OUMAD	17
1SNA179623R0300	BJDP1	20
1SNA179625R0500	BJDP3	20
1SNA179635R0700	CDB2	50
1SNA179668R2000	BJMI6D-2	253
1SNA179669R2100	BJMI6D-3	253
1SNA179670R2600	BJMI6D-4	253
1SNA179671R1300	BJMI6D-5	253
1SNA179672R1400	BJMI6D-10	253
1SNA179694R0300	ITVE	49
1SNA179726R0200	AJS9	68
1SNA179825R2600	ITVE2	245
1SNA183436R0500	CVABM	165
1SNA190001R2000	D27.FF	74
1SNA190002R2100	D32.FF	75
1SNA190003R2200	D42.FF	76
1SNA190004R2300	D55.FF	77
1SNA190005R2400	D55.FF	78
1SNA190006R2500	D27.AF	79
1SNA190007R2600	D32.AF	80
1SNA190008R0700	D42.AF	81
1SNA190009R0000	D55.AF	82
1SNA190016R1600	CPUF35	74
1SNA190017R1700	CPUF70	75
1SNA190018R2000	CPUF120	76
1SNA190019R2100	CPUF185	77
1SNA196789R2400	BNSTP2	67
1SNA196792R1700	BNSTP1	67
1SNA196896R0000	SCAD	18
1SNA199034R1500	D6.ADO	18
1SNA199035R1600	D6.ADO	18
1SNA199036R1700	D6.N.ADO	18
1SNA199042R2500	D8.ADO	20
1SNA199043R2600	D8.ADO	20
1SNA199044R2700	D8.N.ADO	20
1SNA199048R0300	D6.ADO.4	19
1SNA199050R0100	D6.P.ADO	18
1SNA199051R2600	D1.6.ADO	42
1SNA199052R2700	D1.6.ADO	42
1SNA199053R2000	D1.6.N.ADO	42
1SNA199059R0600	D2.8.ADO	43
1SNA199060R0300	D2.8.ADO	43
1SNA199061R2000	D2.8.N.ADO	43
1SNA199064R2300	D6.ADO.2	19
1SNA199091R1700	D2.8.P.ADO	43
1SNA199098R2600	D1.6.P.ADO	42
1SNA199107R2400	D6.SN.ADO	31
1SNA199108R0500	D6.SN.ADO	31
1SNA199118R2600	D8.P.ADO	20
1SNA199135R1700	BNT1	165
1SNA199136R1000	BNT3	165
1SNA199137R1100	D8.SN.ADO	33
1SNA199144R2000	D1.6.SNT2.ADO	51
1SNA199155R2300	D8.ADO.2	21
1SNA199157R2500	D8.ADO.4	21
1SNA199184R1100	D2.8.SFT.ADO2	55
1SNA199186R1300	D2.8.SNNT.ADO2	55
1SNA199187R1400	D2.8.SFLT.ADO2	56
1SNA199188R2500	D2.8.SFDT.ADO2	56
1SNA199208R1100	D1.8.SFT.ADO	53
1SNA199211R2300	D1.8.SFLT.ADO	54
1SNA199212R2400	D1.8.SFDT.ADO	54
1SNA199231R2700	D2.8.SNT2.ADO	52
1SNA199235R2300	D6.SNT2.ADO	32
1SNA199242R0200	D6.D2.ADO	27
1SNA199244R0400	D6.D2.N.ADO	27
1SNA199248R1000	D1.6.ADO.D1	263
1SNA199275R0300	DR6.ADO	134

Order code	Type	Page
1SNA199279R1700	DR8.ADO	135
1SNA199283R2400	DR1.6.ADO	145
1SNA199287R2000	DR2.8.ADO	146
1SNA199321R2100	COCE	183
1SNA199336R2000	FEDAD1	17
1SNA199341R0500	FEMAD3	41
1SNA199352R0000	FEDAD4	29
1SNA199354R0200	FEDAD5	50
1SNA199382R2700	FEDAD7	53
1SNA199417R1200	FED2AD1	27
1SNA199420R2100	BADRL	114
1SNA199421R1600	FEAD1	129
1SNA199423R1000	FEAD2	141
1SNA199433R1200	FEAD5	129
1SNA199435R1400	FEAD6	141
1SNA199437R1600	FEAD3	137
1SNA199439R2000	FEAD4	148
1SNA199444R2500	M6.D2.2S2	245
1SNA199448R0100	M6.D2.2S2.T	246
1SNA199452R2500	M6.D2.S1R	247
1SNA199456R2100	M6.D2.S1R.T	248
1SNA199476R2500	FED2AD2	49
1SNA199480R2600	D1.6.D2.ADO	49
1SNA199527R1000	DS8.P.ADO	131
1SNA199528R2100	DS2.8.P.ADO	142
1SNA199551R2000	SCAD5	17
1SNA199554R2300	D2.5.ADO	17
1SNA199555R2400	D2.5.ADO	17
1SNA199556R2500	D2.5.N.ADO	17
1SNA199563R2400	D5.ADO	41
1SNA199564R2500	D5.ADO	41
1SNA199565R2600	D5.N.ADO	41
1SNA205735R0600	BJM4	114
1SNA205736R0700	BJM4	114
1SNA205737R0000	BJM4	114
1SNA205738R1100	BJM4	114
1SNA205767R1600	DRF6	74
1SNA205768R2700	DRF8	75
1SNA205769R2000	DRF10	76
1SNA205770R2500	DRF12	77
1SNA205771R1200	DRF16	78
1SNA205772R1300	BJS27-2	74
1SNA205773R1400	BJS27-3	74
1SNA205774R1500	BJS32-2	75
1SNA205775R1600	BJS32-3	75
1SNA205776R1700	BJS42-2	76
1SNA205777R1000	BJS42-3	76
1SNA205778R2100	BJS551-2	77
1SNA205779R2200	BJS551-3	77
1SNA205955R0300	BJADO5-2	29
1SNA205956R0400	BJADO5-3	29
1SNA205958R1600	BJADO5-5	29
1SNA205963R0300	BJADO5-10	29
1SNA205974R0600	BJADO6-2	31
1SNA205975R0700	BJADO6-3	31
1SNA205982R2700	BJADO6-10	31
1SNA206394R0200	EV6I	68
1SNA206680R1500	AJS9-1	68
1SNA206681R0200	AJS9-2	68
1SNA206682R0300	AJS9-3	68
1SNA206683R0400	AJS9-4	68
1SNA206720R1400	AJS9-5	68
1SNA206721R0100	AL4-M3	68
1SNA206722R0200	AL4-M3-R1	64
1SNA206723R0300	AL4-M4	65
1SNA215266R0100	FEM8T6	68
1SNA215580R2100	FED2-4	114
1SNA215999R2100	FED10S1	163
1SNA216110R2200	165LTTM5TM5	105

Index

Part number classification

Order code	Type	Page
1SNA216112R1000	165ETTM5TM5	106
1SNA216114R1200	FEET80	105
1SNA229000R1500	RC410	114
1SNA230000R1200	RC55	115
1SNA231000R0700	RC510	17
1SNA232000R0000	RC65	117
1SNA233000R0100	RC610	18
1SNA234000R0200	RC810	20
1SNA235463R2300	RPA	96
1SNA236500R0600	RCT810	101
1SNA237000R0500	RCAL85	131
1SNA238000R1600	RC1010	65
1SNA280092R2500	CPE43	103
1SNA280093R2600	CPE80	105
1SNA290201R1100	DR2.5.2L	124
1SNA290203R1300	DR2.5.N.2L	124
1SNA290211R0200	DR2.10.4L	125
1SNA290213R0400	DR2.10.N.4L	125
1SNA290219R1200	DR2.10.P.4L	124
1SNA290221R0400	DS2.5.2L	122
1SNA290223R0600	DS2.5.N.2L	122
1SNA290231R0600	DS2.10.4L	123
1SNA290233R0000	DS2.10.N.4L	123
1SNA290241R1000	DB2.5.2L	127
1SNA290243R1200	DB2.5.N.2L	127
1SNA290261R1400	DH2.5.2L	128
1SNA290281R0100	FEDB.L	127
1SNA290322R0100	D2.5.NTLP.L	232
1SNA290324R0300	D2.5.NLP.L	233
1SNA290326R0500	D2.5.LLP.L	234
1SNA290328R1700	D2.5.LL.L	232
1SNA290330R1500	D2.5.NL.L	234
1SNA290350R2100	D2.5.C3.L	198
1SNA290352R1700	D2.5.C3.L.L	199
1SNA290354R1100	D2.5.C4.L	200
1SNA290356R1300	D2.5.C4.L.L	201
1SNA290358R2500	FED5.C3.L	198
1SNA290360R2300	FED5.C4.L	200
1SNA290365R1400	PC5.34	198
1SNA290366R1500	PC5.34	198
1SNA290367R1600	PC5.34	198
1SNA290451R0300	BJE762.2	183
1SNA290452R0400	BJE762.5	183
1SNA290453R0500	BJE762.10	183
1SNA290454R0600	EIP	183
1SNA290455R0700	RB-12W7	183
1SNA290483R2400	D2.7.ADO-CPE	184
1SNA290484R2500	D2.7.2ADO-CPE	186
1SNA290486R2700	D1.7.ADO-CPE	183
1SNA290487R2000	D1.7.2ADO-CPE	185
1SNA290501R0000	DS2.10.4L.YL	123
1SNA291102R2300	BJDL5-2	122
1SNA291103R2400	BJDL5-3	122
1SNA291104R2500	BJDL5-4	122
1SNA291105R2600	BJDL5-5	122
1SNA291110R2600	BJDL5-10	122
1SNA291301R0200	FED1.L	122
1SNA291311R2300	FED2.L	122
1SNA291322R2600	BJDL10-2	123
1SNA291323R2700	BJDL10-3	123
1SNA291324R2000	BJDL10-4	123
1SNA291325R2100	BJDL10-5	123
1SNA291559R0400	FED5.L.A	232
1SNA291560R0100	FED5.L.B	233
1SNA291833R1700	FECPE.2ADO	185
1SNA296114R1300	FEET80	107
1SNA296117R1600	165ETTM5TM5-2	107
1SNA299489R0700	DS6.ADO	130
1SNA299493R2300	DS8.ADO	131

Order code	Type	Page
1SNA299497R2700	DS1.6.ADO	141
1SNA299501R0300	DS2.8.ADO	142
1SNA299505R0700	DB6.ADO	138
1SNA299509R1300	DB8.ADO	139
1SNA299513R2600	DB1.6.ADO	148
1SNA299517R2200	DB2.8.ADO	149
1SNA299521R2600	DH6.ADO	140
1SNA299529R0600	DH1.6.ADO	150
1SNA299552R0500	DRE6.ADO	134
1SNA299554R0700	DRE1.6.ADO	145
1SNA299555R0000	DRE2.8.ADO	146
1SNA299556R0100	DSE6.ADO	130
1SNA299557R0200	DSE8.ADO	131
1SNA299558R1300	DSE1.6.ADO	141
1SNA299559R1400	DSE2.8.ADO	142
1SNA299632R0500	DR8.P.ADO	135
1SNA299633R0600	DR2.8.P.ADO	146
1SNA299777R1600	COC 1	176
1SNA399030R0500	D2.5.P.ADO	17
1SNA399031R2200	D5.P.ADO	41
1SNA399226R0200	D2.5.SN.ADO	29
1SNA399228R1400	D2.5.SNT2.ADO	30
1SNA399231R0700	D5.SNT2.ADO	50
1SNA399244R1400	D8.ADO	44
1SNA399245R1500	D8.ADO3	22
1SNA399250R2600	D8.P.ADO	44
1SNA399251R1300	D8.P.ADO3	22
1SNA399318R1600	D8.N.ADO	44
1SNA399319R1700	D8.N.ADO3	22
1SNA399491R2500	DR5.ADO	144
1SNA399495R2100	DRE5.ADO	144
1SNA399509R1700	DR2.5.ADO	133
1SNA399513R2200	DRE2.5.ADO	133
1SNA399514R2300	DS2.5.ADO	129
1SNA399518R0700	DSE2.5.ADO	129
1SNA399519R0000	DB2.5.ADO	137
1SNA399600R2600	D8.D2.ADO	28
1SNA399678R2700	FED5.C3.ADO	202
1SNA399679R2000	FED5.C4.ADO	204
1SNA399683R0500	PC52.10	202
1SNA399684R0600	PC52.10	202
1SNA399685R0700	PC52.10	202
1SNA399689R1300	D5.C3.ADO	202
1SNA399690R1000	D5.C3.ADO.L	203
1SNA399692R0600	D5.C4.ADO	204
1SNA399693R0700	D5.C4.ADO.L	205
1SNA399707R1500	PC52.66	202
1SNA399708R2600	PC52.66	202
1SNA399709R2700	PC52.66	202
1SNA399758R2700	FEDAD10	34
1SNA399762R1300	D8.SFT2.I.ADO2	37
1SNA399766R1700	D8.SNNT2.I.ADO2	37
1SNA399768R2100	D8.SFLT2.I.ADO2	38
1SNA399770R2700	D8.SFDT2.I.ADO2	38
1SNA399777R1200	D8.SFT2.I.ADO	35
1SNA399779R2400	D8.SNNT2.I.ADO	34
1SNA399782R0000	D8.SFDT2.I.ADO	36
1SNA399785R0300	D8.SF.I.ADO	34
1SNA399800R1700	D8.ADO3	22
1SNA399801R0400	D8.ADO	44
1SNA399856R0200	D8.SFLT2.I.ADO	36
1SNA399886R2100	SPBO.NT.L	232
1SNA399931R2500	D6.D1.P.ADO	27
1SNA400063R0000	VRADO.CPE7	183
1SNA400270R2000	D8.D2.P.SF	261
1SNA400271R1500	D8.D2.P.SFL	262
1SNA400272R1600	D8.D2.P.SFD	262
1SNA400273R1700	FEM8D2S1	261
1SNA400711R0600	PC8-R1	157

Order code	Type	Page
1SNA400712R0700	PC8-R2	157
1SNA400713R0000	PC8-R3	157
1SNA400724R0300	PC8-R4	157
1SNA400753R1000	M12.FF	102
1SNA400813R0000	MA2.5.D2-2CPE	180
1SNA400814R0000	MA2.5-CPE	176
1SNA400815R0000	MA2.5-SNB-CPE	182
1SNA400817R0000	MA2.5-2CPE	178
1SNA400818R0000	ENS.FEDBCP	180
1SNA400819R0000	ENS.FE-BCP	176
1SNA400821R0000	MA2.5-2CPE1-Pb	179
1SNA400822R0000	MA2.5-CPE.1	177
1SNA400823R0000	MA2.5.D-2CPE	181
1SNA400824R0000	FEM6	176
1SNA400825R0000	FEDCP	180
1SNA400826R0000	FE2CPE	178
1SNA400827R0000	MA2.5-CPE	176
1SNK900001R0000	BAM4	17
1SNK900002R0000	BAZ1	17
1SNK900102R0000	BAZH1	27
1SNK900652R0000	SC-JB8-2	68
1SNK900653R0000	SC-JB8-3	68
1SNK900654R0000	SC-JB8-4	68

Index
Type classification

Type	Order code	Page
165ETTM5TM5	1SNA216112R1000	106
165ETTM5TM5-2	1SNA296117R1600	107
165LTTM5TM5	1SNA216110R2200	106
AD2.5	1SNA114205R2000	248
AJS9	1SNA179726R0200	169
AJS9-1	1SNA206680R1500	170
AJS9-2	1SNA206681R0200	170
AJS9-3	1SNA206682R0300	170
AJS9-4	1SNA206683R0400	170
AJS9-5	1SNA206720R1400	170
AL2	1SNA163043R2100	262
	1SNA167319R0600	225
AL4-M3	1SNA206721R0100	262
AL4-M3-R1	1SNA206722R0200	106
AL4-M4	1SNA206723R0300	65
ANT	1SNA168675R1400	262
BADRL	1SNA199420R2100	147
BAM4	1SNK900001R0000	263
BAMH	1SNA114836R0000	95
BAZ1	1SNK900002R0000	263
BAZH1	1SNK900102R0000	262
BJADO5-10	1SNA205963R0300	144
BJADO5-2	1SNA205955R0300	144
BJADO5-3	1SNA205956R0400	144
BJADO5-5	1SNA205958R1600	29
BJADO6-10	1SNA205982R2700	263
BJADO6-2	1SNA205974R0600	263
BJADO6-3	1SNA205975R0700	263
BJD6	1SNA178024R2500	196
	1SNA178025R2600	196
	1SNA178026R2700	196
	1SNA178027R2000	196
	1SNA178032R2500	196
	1SNA178033R2600	196
BJDL10-2	1SNA291322R2600	125
BJDL10-3	1SNA291323R2700	125
BJDL10-4	1SNA291324R2000	125
BJDL10-5	1SNA291325R2100	125
BJDL5-10	1SNA291110R2600	236
BJDL5-2	1SNA291102R2300	236
BJDL5-3	1SNA291103R2400	236
BJDL5-4	1SNA291104R2500	236
BJDL5-5	1SNA291105R2600	236
BJDP1	1SNA179623R0300	44
BJDP3	1SNA179625R0500	44
BJDP4	1SNA174781R2500	63
BJE762.10	1SNA290453R0500	186
BJE762.2	1SNA290451R0300	186
BJE762.5	1SNA290452R0400	186
BJM4	1SNA205735R0600	114
	1SNA205736R0700	114
	1SNA205737R0000	114
	1SNA205738R1100	114
BJM62	1SNA173217R2600	225
	1SNA173218R0700	225
	1SNA173219R0000	225
	1SNA173221R2200	225
	1SNA173226R2700	225
BJM8	1SNA168520R0500	262
	1SNA168521R2200	262
	1SNA168522R2300	262
	1SNA168974R0000	262
BJMI10-10	1SNA176679R1000	166
BJMI10-2	1SNA176675R0400	166
BJMI10-3	1SNA176676R0500	166
BJMI10-4	1SNA176677R0600	166
BJMI10-5	1SNA176678R1700	166
BJMI5-10	1SNA176282R2300	181
BJMI5-2	1SNA176278R1600	181
BJMI5-3	1SNA176279R1700	181
BJMI5-4	1SNA176280R0500	181
BJMI5-5	1SNA176281R2200	178
BJMI5DR	1SNA176704R0200	116
	1SNA176705R0300	116
	1SNA176706R0400	116
	1SNA176708R1600	116
BJMI6-10	1SNA176667R0400	63
BJMI6-2	1SNA176663R0000	63
BJMI6-3	1SNA176664R0100	63
BJMI6-4	1SNA176665R0200	63
BJMI6-5	1SNA176666R0300	63
BJMI6D-10	1SNA179672R1400	260
BJMI6D-2	1SNA179668R2000	260
BJMI6D-3	1SNA179669R2100	260
BJMI6D-4	1SNA179670R2600	260
BJMI6D-5	1SNA179671R1300	260
BJMI8-10	1SNA176673R0200	64
BJMI8-2	1SNA176669R1600	64
BJMI8-3	1SNA176670R1300	64
BJMI8-4	1SNA176671R0000	64
BJMI8-5	1SNA176672R0100	64
BJS10	1SNA164585R1700	65
	1SNA164586R1000	65
	1SNA164587R1100	65
	1SNA164588R2200	65
	1SNA168273R1100	65
BJS10-20	1SNA177654R0000	65
BJS12.5-10	1SNA174396R2300	102
BJS12.5-2	1SNA174393R2000	102
BJS12.5-3	1SNA174394R2100	102
BJS12.5-5	1SNA174395R2200	102
BJS13-10	1SNA167224R2700	104
BJS27-2	1SNA205772R1300	79
BJS27-3	1SNA205773R1400	79
BJS32-2	1SNA205774R1500	80
BJS32-3	1SNA205775R1600	80
BJS42-2	1SNA205776R1700	81
BJS42-3	1SNA205777R1000	81
BJS5-20	1SNA177652R0600	116
BJS551-2	1SNA205778R2100	82
BJS551-3	1SNA205779R2200	82
BJS8	1SNA164581R1300	169
	1SNA164582R1400	169
	1SNA164583R1500	169
BJS8-20	1SNA174789R0500	169
BJS9.5-10	1SNA173819R2200	101
BJS9.5-2	1SNA173815R1600	101
BJS9.5-3	1SNA173816R1700	101
BJS9.5-4	1SNA173817R1000	101
BNSTP1	1SNA196792R1700	168
BNSTP2	1SNA196789R2400	168
BNT1	1SNA199135R1700	166
BNT2	1SNA114329R2300	166
BNT3	1SNA199136R1000	166
BO3	1SNA164406R2400	232
BP8.A4	1SNA173888R2000	168
BRC-0.5	1SNA174558R0500	166
BRC-1	1SNA173906R2200	166
BRC-1.5	1SNA173907R2300	166
BRC-2.5	1SNA173908R0400	166
BRC-4	1SNA174601R0100	166
CBD2S	1SNA178408R1400	248
CBD5	1SNA167674R0200	120
CBM5	1SNA178745R1400	263
CDB2	1SNA179635R0700	51
CN5	1SNA179371R1600	262
COC 1	1SNA299777R1600	182
COCE	1SNA199321R2100	186
COCF 32	1SNA173660R1600	182
CPE43	1SNA280092R2500	104
CPE80	1SNA280093R2600	107
CPFT10	1SNA094310R2400	182
CPFT2	1SNA094302R2100	182
CPFT3	1SNA094303R2200	182
CPFT4	1SNA094304R2300	182
CPFTR-10	1SNA094360R0600	182
CPFTR-2	1SNA094352R2200	182
CPFTR-3	1SNA094353R2300	182
CPFTR-4	1SNA094354R2400	182
CPP261	1SNA168202R1300	92
CPP262	1SNA168201R1200	92
CPP263	1SNA163403R2000	92
CPP311	1SNA168204R1500	93
CPP312	1SNA168203R1400	93
CPP313	1SNA163409R0600	93
CPP351	1SNA168206R1700	94
CPP352	1SNA168205R1600	94
CPP353	1SNA163418R2600	94
CPP421	1SNA168208R2100	95
CPP422	1SNA168207R1000	95
CPP423	1SNA163424R1400	95
CPUF120	1SNA190018R2000	81
CPUF185	1SNA190019R2100	82
CPUF35	1SNA190016R1600	79
CPUF70	1SNA190017R1700	80
CPV1-2	1SNA176816R1200	113
CVABM	1SNA183436R0500	165
CVABM1	1SNA116783R1500	166
D1.6.ADO	1SNA199051R2600	42
	1SNA199052R2700	42
D1.6.ADO.D1	1SNA199248R1000	263
D1.6.D2.ADO	1SNA199480R2600	49
D1.6.N.ADO	1SNA199053R2000	42
D1.6.P.ADO	1SNA199098R2600	46
D1.6.SNT2.ADO	1SNA199144R2000	51
D1.7.2ADO-CPE	1SNA290487R2000	185
D1.7.ADO-CPE	1SNA290486R2700	183
D1.8.SFDT.ADO	1SNA199212R2400	54
D1.8.SFLT.ADO	1SNA199211R2300	54
D1.8.SFT.ADO	1SNA199208R1100	53
D5.ADO	1SNA199563R2400	41
	1SNA199564R2500	41
D5.C3.ADO	1SNA399689R1300	202
D5.C3.ADO.L	1SNA399690R1000	203
D5.C4.ADO	1SNA399692R0600	204
D5.C4.ADO.L	1SNA399693R0700	205
D5.N.ADO	1SNA199565R2600	41
D5.P.ADO	1SNA399031R2200	45
D5.SNT2.ADO	1SNA399231R0700	50
D42.AF	1SNA190008R0700	81
D42.FF	1SNA190003R2200	76
D55.AF	1SNA190009R0000	82
D55.FF	1SNA190004R2300	77
D2.5.ADO	1SNA199554R2300	17
	1SNA199555R2400	17
D2.5.C3.L	1SNA290350R2100	198
D2.5.C3.L.L	1SNA290352R1700	199
D2.5.C4.L	1SNA290354R1100	200
D2.5.C4.L.L	1SNA290356R1300	201
D2.5.LL.L	1SNA290328R1700	236
D2.5.LLP.L	1SNA290326R0500	235
D2.5.N.ADO	1SNA199556R2500	17
D2.5.NL.L	1SNA290330R1500	235
D2.5.NLP.L	1SNA290324R0300	233
D2.5.NTLP.L	1SNA290322R0100	232
D2.5.P.ADO	1SNA399030R0500	23
D2.5.SN.ADO	1SNA399226R0200	29

Index
Type classification

Type	Order code	Page
D2.5.SNT2.ADO	1SNA399228R1400	30
D2.6.D	1SNA115542R1200	194
D2.6.DA	1SNA115541R1100	193
D2.6.DAL2	1SNA115547R1700	196
D2.6.DL	1SNA115537R0500	195
D2.6.DPA1	1SNA115643R2700	192
D2.7.2ADO-CPE	1SNA290484R2500	186
D2.7.ADO-CPE	1SNA290483R2400	184
D2.8.ADO	1SNA199059R0600	43
	1SNA199060R0300	43
D2.8.N.ADO	1SNA199061R2000	43
D2.8.P.ADO	1SNA199091R1700	47
D2.8.SFDT.ADO2	1SNA199188R2500	56
D2.8.SFLT.ADO2	1SNA199187R1400	56
D2.8.SFT.ADO2	1SNA199184R1100	57
D2.8.SNNT.ADO2	1SNA199186R1300	57
D2.8.SNT2.ADO	1SNA199231R2700	52
D55.FF	1SNA190005R2400	78
D27.AF	1SNA190006R2500	79
D27.FF	1SNA190001R2000	74
D6.A.LLP	1SNA110418R2500	225
D6.A.NTLP	1SNA110415R1200	224
D6.ADO	1SNA199034R1500	18
	1SNA199035R1600	18
D6.ADO.2	1SNA199064R2300	19
D6.ADO.4	1SNA199048R0300	19
D6.D1.P.ADO	1SNA399931R2500	27
D6.D2.ADO	1SNA199242R0200	27
D6.D2.N.ADO	1SNA199244R0400	27
D6.LL	1SNA110442R2500	216
D6.LLP	1SNA110441R2400	215
D6.LNTP1	1SNA110264R0200	217
D6.LNTP2	1SNA110327R2100	219
D6.LNTP3	1SNA110269R1700	218
D6.LNTP4	1SNA110328R0200	221
D6.LNTP6	1SNA110331R2500	223
D6.LNTP7	1SNA110332R2600	222
D6.LNTP8	1SNA110333R2700	220
D6.N.ADO	1SNA199036R1700	18
D6.NLP	1SNA110440R0700	214
D6.NTLP	1SNA110439R2200	213
D6.P.ADO	1SNA199050R0100	24
D6.SN.ADO	1SNA199107R2400	31
	1SNA199108R0500	31
D6.SNT2.ADO	1SNA199235R2300	32
D8.ADO	1SNA399244R1400	44
	1SNA399801R0400	44
D8.D2.P.SF	1SNA400270R2000	261
D8.D2.P.SFD	1SNA400272R1600	262
D8.D2.P.SFL	1SNA400271R1500	262
D8.N.ADO	1SNA399318R1600	44
D8.P.ADO	1SNA399250R2600	48
D8.SF.I.ADO	1SNA399785R0300	34
D8.SFDT2.I.ADO	1SNA399782R0000	36
D8.SFDT2.I.ADO2	1SNA399770R2700	38
D8.SFLT2.I.ADO	1SNA399856R0200	36
D8.SFLT2.I.ADO2	1SNA399768R2100	38
D8.SFT2.I.ADO	1SNA399777R1200	39
D8.SFT2.I.ADO2	1SNA399762R1300	40
D8.SN.ADO	1SNA199137R1100	33
D8.SNNT2.I.ADO	1SNA399779R2400	39
D8.SNNT2.I.ADO2	1SNA399766R1700	40
D10.SNBTB1	1SNA115928R1500	163
D10.SNBTB2	1SNA115929R1600	164
D8.ADO	1SNA199042R2500	20
	1SNA199043R2600	20
D8.ADO.2	1SNA199155R2300	21
D8.ADO.4	1SNA199157R2500	21
D8.ADO3	1SNA399245R1500	22
	1SNA399800R1700	22
D8.D2.ADO	1SNA399600R2600	28
D8.N.ADO	1SNA199044R2700	20
D8.N.ADO3	1SNA399319R1700	22
D8.P.ADO	1SNA199118R2600	25
D8.P.ADO3	1SNA399251R1300	26
D8.ST.RS	1SNA115914R0700	169
D8.ST1.RS.IP20	1SNA115831R0400	170
D32.AF	1SNA190007R2600	80
D32.FF	1SNA190002R2100	75
DB1.6.ADO	1SNA299513R2600	148
DB2.5.2L	1SNA290241R1000	127
DB2.5.ADO	1SNA399519R0000	137
DB2.5.N.2L	1SNA290243R1200	127
DB2.8.ADO	1SNA299517R2200	149
DB6.ADO	1SNA299505R0700	138
DB8.ADO	1SNA299509R1300	139
DCB	1SNA105028R2100	182
DCJ	1SNA173059R0300	112
DCO	1SNA173060R0000	113
DCV	1SNA173058R0200	227
DH1.6.ADO	1SNA299529R0600	150
DH2.5.2L	1SNA290261R1400	128
DH6.ADO	1SNA299521R2600	140
DR1.4	1SNA110106R2500	114
DR1.5	1SNA115510R1600	115
DR1.5.1	1SNA112086R0200	116
DR1.6.ADO	1SNA199283R2400	145
DR5.ADO	1SNA399491R2500	144
DR2.10.4L	1SNA290211R0200	125
DR2.10.N.4L	1SNA290213R0400	125
DR2.10.P.4L	1SNA290219R1200	126
DR2.5.2L	1SNA290201R1100	124
DR2.5.ADO	1SNA399509R1700	133
DR2.5.N.2L	1SNA290203R1300	124
DR2.5.S1	1SNA112098R1600	120
DR2.8.ADO	1SNA199287R2000	146
DR2.8.P.ADO	1SNA299633R0600	147
DR6	1SNA110251R0500	117
DR6.1	1SNA110491R1700	118
DR6.1.N	1SNA120491R1100	118
DR6.ADO	1SNA199275R0300	134
DR6.N	1SNA120251R0700	117
DR6.P	1SNA160496R2600	119
DR8.ADO	1SNA199279R1700	135
DR8.P.ADO	1SNA299632R0500	136
DR8.SF	1SNA110368R1200	121
DRE1.6.ADO	1SNA299554R0700	145
DRE5.ADO	1SNA399495R2100	144
DRE2.5.ADO	1SNA399513R2200	133
DRE2.8.ADO	1SNA299555R0000	146
DRE6.ADO	1SNA299552R0500	134
DRF10	1SNA205769R2000	81
DRF12	1SNA205770R2500	82
DRF16	1SNA205771R1200	78
DRF6	1SNA205767R1600	79
DRF8	1SNA205768R2700	80
DS1.6.ADO	1SNA299497R2700	141
DS2.10.4L	1SNA290231R0600	123
DS2.10.4L.YL	1SNA290501R0000	123
DS2.10.N.4L	1SNA290233R0000	123
DS2.5.2L	1SNA290221R0400	122
DS2.5.ADO	1SNA399514R2300	129
DS2.5.N.2L	1SNA290223R0600	122
DS2.8.ADO	1SNA299501R0300	142
DS2.8.P.ADO	1SNA199528R2100	143
DS6.ADO	1SNA299489R0700	130
DS8.ADO	1SNA299493R2300	131
DS8.P.ADO	1SNA199527R1000	132
DSE1.6.ADO	1SNA299558R1300	141
DSE2.5.ADO	1SNA399518R0700	129
DSE2.8.ADO	1SNA299559R1400	142
DSE6.ADO	1SNA299556R0100	130
DSE8.ADO	1SNA299557R0200	131
ECP26	1SNA113689R2400	96
ECP31	1SNA113690R2100	96
ECP35	1SNA113691R1600	96
ECP42	1SNA113692R1700	96
ECR-3	1SNA175263T0600	102
EIP	1SNA113550R2400	248
	1SNA290454R0600	186
EL6	1SNA173627R2100	262
EL61	1SNA177812R1700	196
ENS.FE-BCP	1SNA400819R0000	177
ENS.FEDBCP	1SNA400818R0000	181
EV6I	1SNA206394R0200	169
EV8S	1SNA168401R0300	161
FC2	1SNA007865R2600	248
FC2.MC	1SNA107239R0300	57
FC4	1SNA167860R0100	168
FC4-1	1SNA167927R1000	170
FE2CPE	1SNA400826R0000	182
FEAD1	1SNA199421R1600	140
FEAD2	1SNA199423R1000	150
FEAD3	1SNA199437R1600	139
FEAD4	1SNA199439R2000	149
FEAD5	1SNA199433R1200	140
FEAD6	1SNA199435R1400	150
FECPE.2ADO	1SNA291833R1700	186
FED1.L	1SNA291301R0200	128
FED10S1	1SNA215999R2100	164
FED2.L	1SNA291311R2300	128
FED2-4	1SNA215580R2100	114
FED2AD1	1SNA199417R1200	28
FED2AD2	1SNA199476R2500	49
FED3E	1SNA116771R2000	196
FED5.C3.ADO	1SNA399678R2700	203
FED5.C3.L	1SNA290358R2500	199
FED5.C4.ADO	1SNA399679R2000	205
FED5.C4.L	1SNA290360R2300	201
FED5.L.A	1SNA291559R0400	232
FED5.L.B	1SNA291560R0100	236
FED6	1SNA116964R1200	216
FEDA6	1SNA116965R1300	225
FEDAD1	1SNA199336R2000	26
FEDAD10	1SNA399758R2700	40
FEDAD4	1SNA199352R0000	33
FEDAD5	1SNA199354R0200	52
FEDAD7	1SNA199382R2700	57
FEDB.L	1SNA290281R0100	127
FEDCP	1SNA400825R0000	181
FEDR5	1SNA117318R2300	116
FEDR51	1SNA117668R0200	120
FEDR61	1SNA117600R0300	119
FEET80	1SNA216114R1200	106
	1SNA296114R1300	107
FEM12F	1SNA116713R1600	102
FEM13F	1SNA116977R1700	104
FEM6	1SNA118368R1600	230
	1SNA400824R0000	177
FEM6D	1SNA118499R2300	260
FEM8D2S1	1SNA400273R1700	262
FEM8S	1SNA116951R1500	121
FEM8T6	1SNA215266R0100	170
FEM9	1SNA113067R1700	101
FEMAD3	1SNA199341R0500	263
FEMR10	1SNA114434R0500	65
FEMR8	1SNA116987R0200	64

Index
Type classification

Type	Order code	Page
FEMR8T	1SNA116991R0600	67
FEMS6	1SNA113885R0100	112
FEMS8	1SNA114195R0600	113
FEMSTA	1SNA116979R2100	162
FEMT1	1SNA113137R0200	168
FEMT2	1SNA113629R2700	161
FEMT3	1SNA114328R2200	165
FEMT4	1SNA114778R0500	162
FEMT5	1SNA116781R1300	166
FU520	1SNA008288R1500	262
	1SNA008289R1600	121
	1SNA008290R1300	262
	1SNA008291R0000	262
	1SNA008292R0100	121
ITVE	1SNA179694R0300	49
ITVE2	1SNA179825R2600	246
M10.NT	1SNA125121R0600	229
M10.PE.N	1SNA165683R2200	239
M10.RS	1SNA115320R2700	65
M10.ST-Sn	1SNA115539R1700	166
M35.AF	1SNA115145R1400	90
M35.F	1SNA115147R1600	94
M35.FF	1SNA115146R1500	86
M12.NT1	1SNA125593R0000	230
M12.PE.N	1SNA165680R0300	240
M42.AF	1SNA115148R2700	91
M42.F	1SNA115150R2500	95
M42.FF	1SNA115149R2000	87
M16.NT	1SNA125358R0300	231
M16.PE.N	1SNA165575R2500	241
M26.AF	1SNA115139R1600	88
M26.F	1SNA115141R1000	92
M26.FF	1SNA115140R2300	84
M6.D2.2S2	1SNA199444R2500	245
M6.D2.2S2.T	1SNA199448R0100	246
M6.D2.S1R	1SNA199452R2500	247
M6.D2.S1R.T	1SNA199456R2100	248
M6.DD	1SNA115168R2300	256
M6.DD1	1SNA115184R0400	257
M6.DE	1SNA115185R0500	258
M6.DE1	1SNA115177R1400	259
M6.DE1.D	1SNA115371R2600	253
M6.DE1.D1	1SNA115591R0400	254
M6.DE2	1SNA115326R1100	260
M6.DE2.D	1SNA115327R1200	255
M6.N.RS	1SNA125930R1500	63
M6.NT	1SNA125117R0200	227
M6.RS	1SNA115930R1300	63
M6.SNTS	1SNA115229R2000	66
M6.ST.Au	1SNA115314R1500	165
M6.ST.Sn	1SNA115313R1400	165
M12.FF	1SNA115262R2100	102
	1SNA115263R2200	102
	1SNA115511R0300	102
	1SNA400753R1000	102
M13.FF	1SNA115626R1600	103
M13.FF.1	1SNA115627R1700	104
M8.NT	1SNA125119R1400	228
M8.RS	1SNA115685R1200	64
M8.ST	1SNA115236R1700	157
M8.ST1	1SNA115237R1000	158
M8.ST1.IP20	1SNA115971R1000	159
M8.ST3	1SNA115239R2200	160
M8.ST7	1SNA115243R2600	161
M8.STA	1SNA115359R0200	162
M8.STP	1SNA105141R2700	168
	1SNA105142R2000	168
	1SNA115277R2000	168
M8.STP.RS	1SNA115678R0200	67
M8.STP1	1SNA115529R1500	167
M8.STP3	1SNA115500R2500	168
M9.EE	1SNA115201R2500	101
M31.AF	1SNA115142R1100	89
M31.F	1SNA115144R1300	93
M31.FF	1SNA115143R1200	85
MA2.5.D2-2CPE	1SNA125961R1000	180
	1SNA400813R0000	180
MA2.5.D-2CPE	1SNA400823R0000	181
MA2.5.NT	1SNA125487R0600	226
MA2.5-2CPE	1SNA125711R1500	178
	1SNA400817R0000	178
MA2.5-2CPE1-Pb	1SNA400821R0000	179
MA2.5-CPE	1SNA400814R0000	176
	1SNA400827R0000	176
MA2.5-CPE.1	1SNA400822R0000	177
MA2.5-SNB-CPE	1SNA400815R0000	182
MS6	1SNA105265R0300	112
	1SNA115265R2400	112
MS8	1SNA115278R0100	113
MTC6	1SNA115206R2200	197
MTC6.Ex	1SNA146227R2500	197
OUMAD	1SNA179466R0600	263
OUPAD	1SNA178944R0400	263
PC10-10	1SNA163315R2600	166
PC5.34	1SNA290365R1400	201
	1SNA290366R1500	201
	1SNA290367R1600	201
PC5-10	1SNA113544R1200	182
PC51-10	1SNA167908R0600	116
PC5-2	1SNA113542R1000	182
PC52.10	1SNA399683R0500	205
	1SNA399684R0600	205
	1SNA399685R0700	205
PC52.66	1SNA399707R1500	205
	1SNA399708R2600	205
	1SNA399709R2700	205
PC6-10	1SNA113548R2600	248
PC61-10	1SNA163311R2200	260
PC6-2	1SNA113546R1400	248
PC6-3	1SNA116536R0500	248
PC6-4	1SNA116537R0600	248
PC8-10	1SNA163313R2400	168
PC81-10	1SNA173523R1100	262
PC8-2	1SNA116538R1700	168
PC8-3	1SNA116539R1000	168
PC8-4	1SNA116540R2500	168
PC8-R1	1SNA400711R0600	161
PC8-R2	1SNA400712R0700	161
PC8-R3	1SNA400713R0000	161
PC8-R4	1SNA400724R0300	161
PEP	1SNA113762R2400	96
PSC	1SNA173181R1300	166
PT101	1SNA163181R1100	65
RB-12W7	1SNA290455R0700	186
RC1010	1SNA238000R1600	231
RC410	1SNA229000R1500	114
RC510	1SNA231000R0700	226
RC55	1SNA230000R1200	236
RC610	1SNA233000R0100	263
RC65	1SNA232000R0000	225
RC810	1SNA234000R0200	262
RCAL85	1SNA237000R0500	149
RCT810	1SNA236500R0600	102
REH3	1SNA163155R2600	107
RPA	1SNA235463R2300	96
SCAD	1SNA196896R0000	49
SCAD5	1SNA199551R2000	41
SCD	1SNA103189R2600	225
SCDR61	1SNA173016R1000	119
SCF6	1SNA118707R0300	66
SCF9	1SNA103672R0100	102
SCFCV1-2	1SNA116795R1100	113
SCFD	1SNA114117R0700	225
SCFEX1	1SNA103619R0400	240
SCFEX3	1SNA103620R0100	240
SCFM6	1SNA114825R0500	240
SCFT1	1SNA103588R2600	168
SCFT2	1SNA114522R0500	161
SC-JB8-2	1SNK900652R0000	170
SC-JB8-3	1SNK900653R0000	170
SC-JB8-4	1SNK900654R0000	170
SFB1	1SNA163860R0500	232
SFB2	1SNA168956R0600	232
SPBO.NT.L	1SNA399886R2100	236
TGA8	1SNA168672R1100	262
	1SNA168673R1200	262
	1SNA168674R1300	262
VRADO.CPE7	1SNA400063R0000	186
VRB3	1SNA128035R1600	231
VRB6	1SNA128361R0100	230
VSJ11	1SNA163394R2600	65

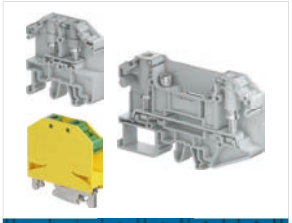

RGW RING LUG TERMINAL BLOCKS

Stud technology

ENTRELEC Terminal Blocks

RGW Ring lug terminal blocks
Stud technology

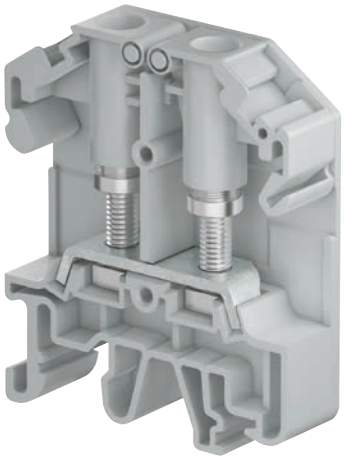

Fast and secured wiring for ring lugs

The RGW terminal blocks offer a combination of fast and secured wiring.Thanks to its exceptional design, the nuts are captive in a pivoting wing and provide a convenient wiring of ring lugs.

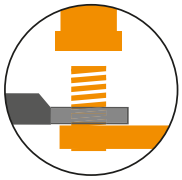

RoHS

Speed up your processes
Fast ring lug connection

- 45% faster than open style terminal blocks thanks to captive and ready to tighten nuts
- No need to remove the nuts for the first use
- Easy 3 steps wiring.

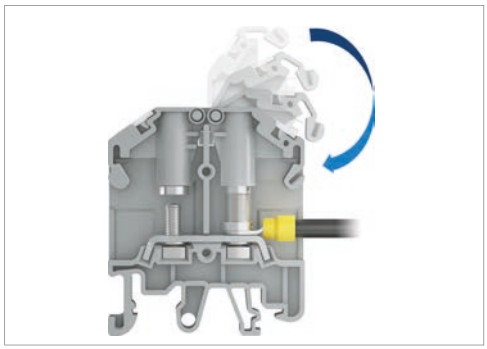

Security and protection
Secured wiring

- 100% captive wire connection: optimal combination of stud, safety wings, captive nut and ring lug
- Self-locking wings to prevent sudden opening
- Touch proof design.

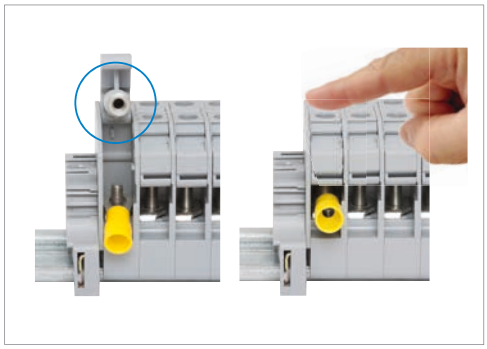

Improve installation efficiency
Convenient installation

- 15% more compact: save space on the DIN Rail versus open style terminal blocks
- Universal foot for mounting on symmetrical and asymmetrical DIN Rails.

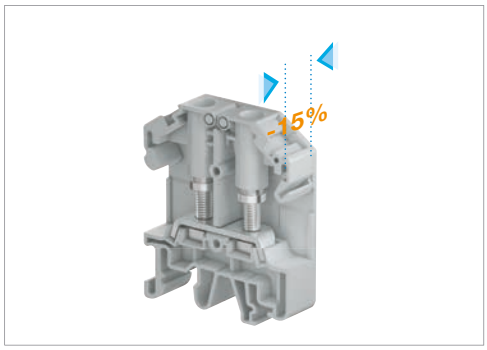

1SNC168020S0201

Features

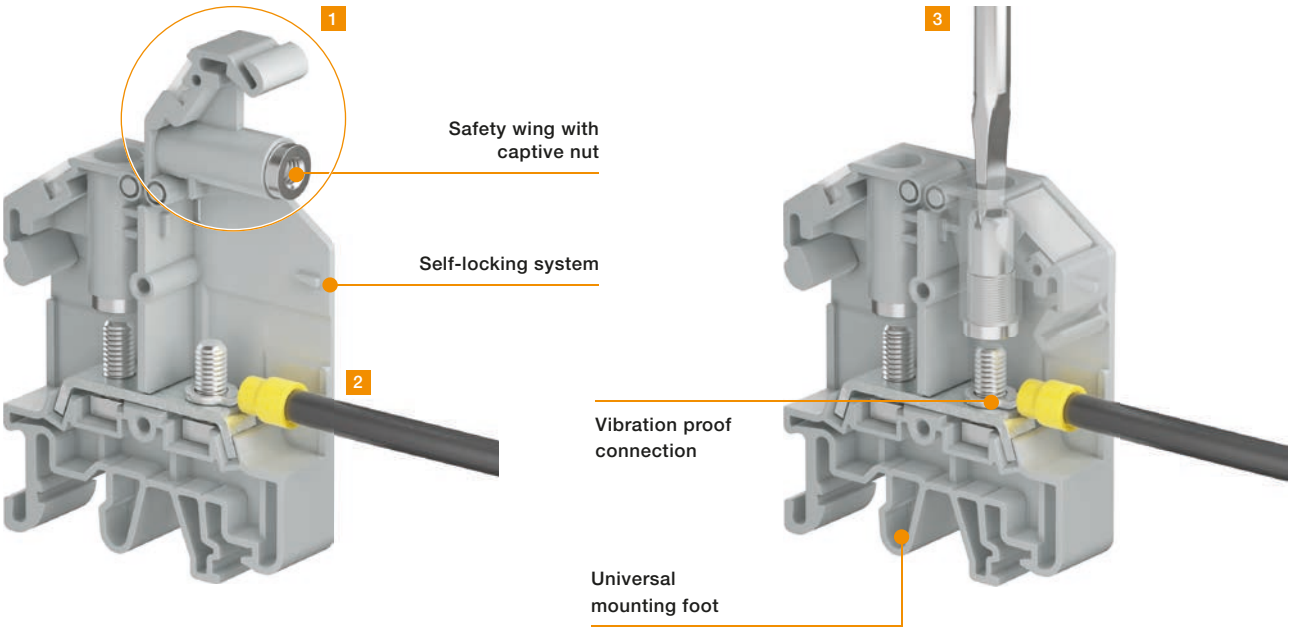

Easy 3 step wiring:

1 Open the safety wing - 2 Hook the wire on the stud and close the wing - 3 Screw down the nut

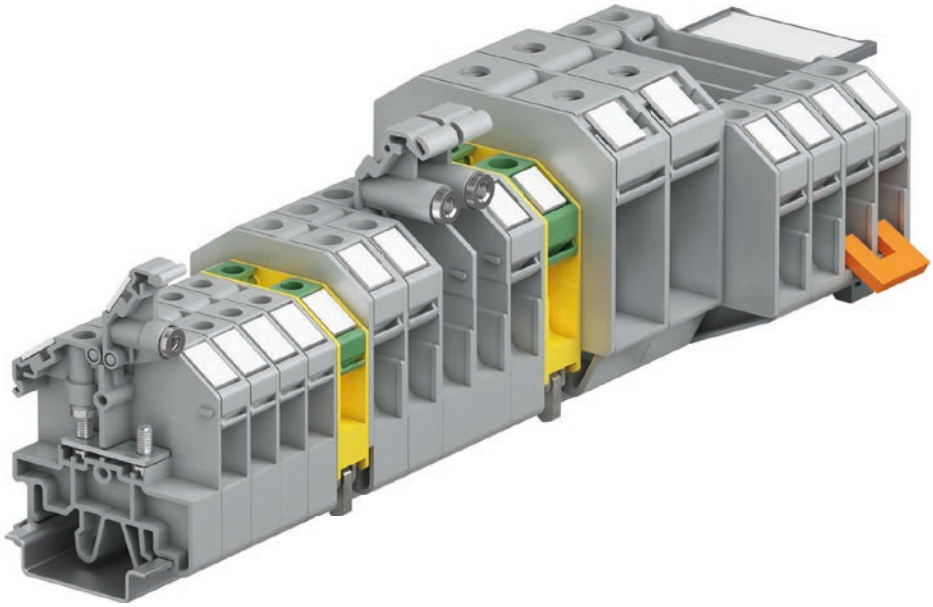

1SNC168021S0201

2.5 mm² 14 AWG

Feed-through

Feed-through
with test sockets

Ground

6 mm² 10 AWG

Feed-through

Feed-through
with test sockets

Ground

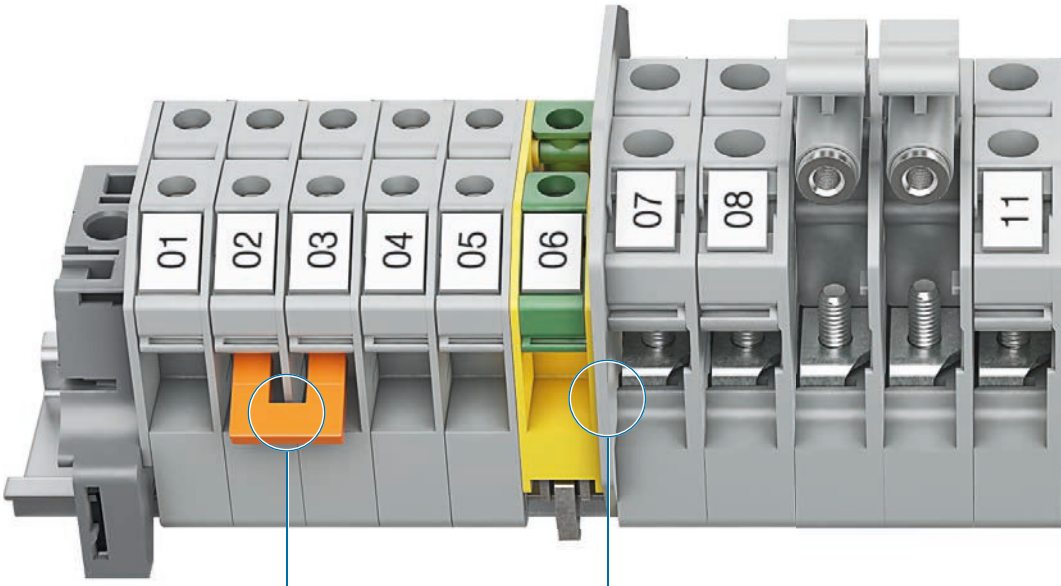

Jumper bars
from 2 to 10 poles

Convenient circuit separator
circuit & voltage separation

25 mm² 4 AWG
Feed-through

6 mm² 10 AWG
Feed-through with test sockets
Disconnect with sliding link

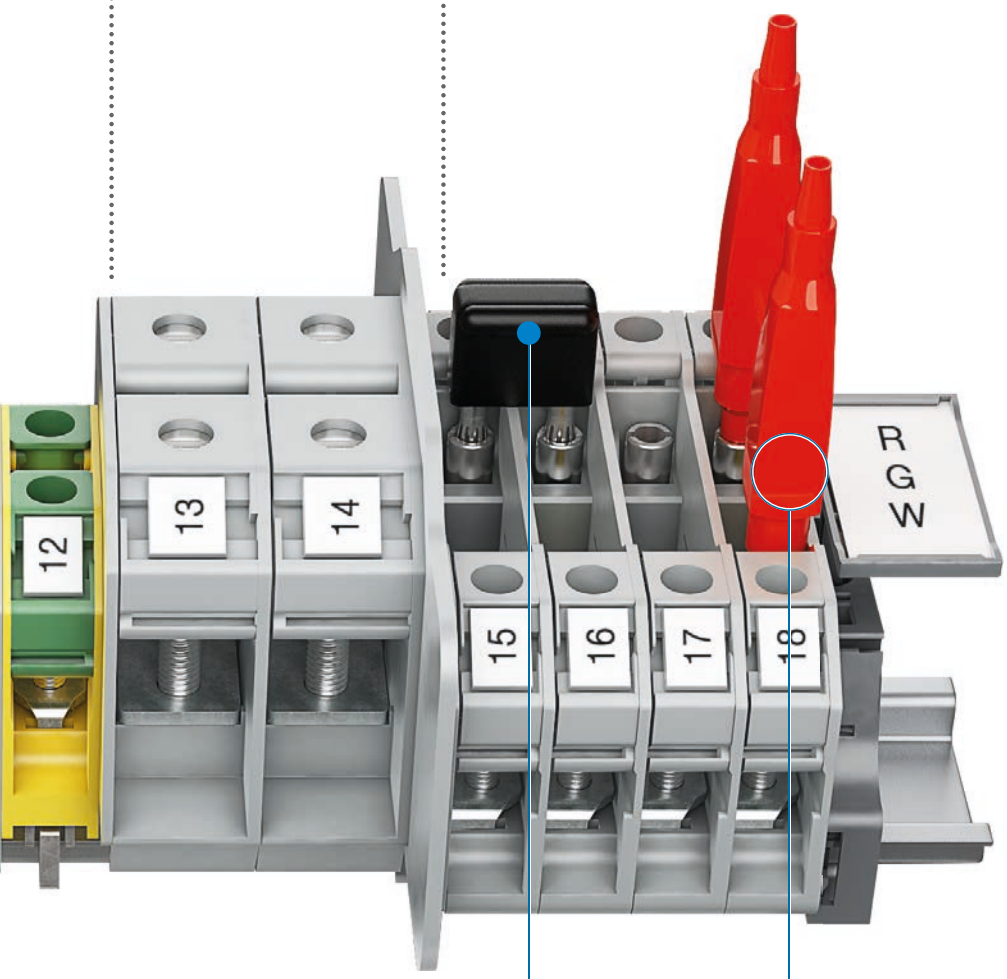

Easy CT short circuiting
with short-circuit plug

Convenient testing
test sockets compatible with
DIA 4 mm test plugs

Qualified for worldwide markets, applications and for severe environments: vibration, shock...

Industry

Ring lug technology is a long time approved technology in the industry (i.e semi conductor production line) for it's proven reliability. The 100% captive connection secures the wiring.

Utility

Thanks to a 100% captive connection our RGW terminal blocks are well adapted to the power, medium and low voltage switchgear panels where a full secured connection is required.

HVAC

RGW terminal blocks are well adapted to HVAC application requesting ring lug terminals providing at the same time a vibration proof connection and increased productivity.

RoHS

1SNC168023S0201

Railway

Rail vehicles are subjected to extreme environmental conditions. RGW terminal blocks are part of the ENTRELEC railway terminal blocks offering, the largest of the market. RGW terminal blocks are tested in accordance with the latest and most demanding standards applying to rolling stock applications.

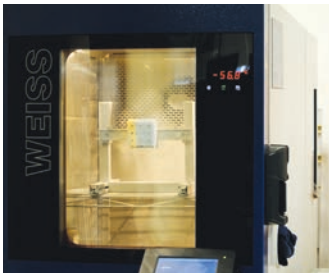

IEC 61373 Railway applications – Rolling stock equipment – Shock and vibration tests
RGW terminal blocks are complying with **category 1 (body mounted) class B.**

EN 45545-2 Railway applications. Fire protection on railway vehicles. Requirements for fire behavior of materials and components
RGW terminal blocks plastic materials are rated **HL3 R22 (the highest Hazard level)**.
They can be used on vehicles for subway, tube, sleeping and couchette.

NF F 16-101 Directive relative to selecting materials in relation to their fire resistance in terms of its behavior in a fire, the opacity of smoke and the toxicity of the gas released.

NF F 16-102 Complement to NF F 16-101. The purpose of this standard is to specify the application of NF F 16-101 to electrical equipment and especially to individual apparatus.
RGW terminal blocks plastic materials are rated **I2F2. Level 3.** This level concern products mounted inside a room for passengers or running crew.

IEC 60068-2.1/IEC 60068-2.2/IEC 60068-2.78/IEC 60068-2.30 : Environmental test
RGW terminal blocks have successfully passed the damp heat, dry heat, cold climatic test.

UL94 (North America) Standard for Safety of Flammability of Plastic Materials for Parts in Devices and Appliances testing
RGW terminal blocks plastic materials are rated **UL94 V0.**

1SNC168034S0201

RGW2.5 Ring lug terminal blocks

Feed-through - 9 mm 0.354 in spacing

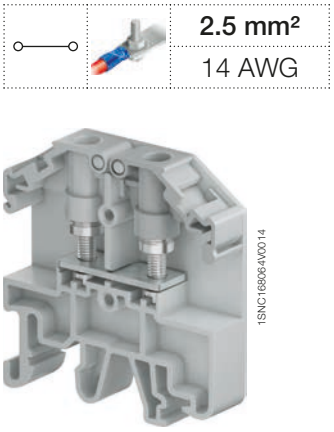

2.5 mm²
14 AWG

1SNC168064V0014

RGW2.5

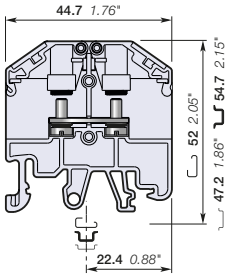

9 mm 0.354 in spacing

Description

- Stud terminal block for ring lug connection,
- Integrated captive nuts in protective wings provide easy and secured connection,
- Universal mounting on symmetrical and asymmetrical rails.

Ordering details

Description		Color	Type	Part Numbers		Pkg qty	Weight (1 pce) g
Feed-through	With 2 studs M3 and captive nuts in wings	Grey	RGW2.5-V0	1SNA510003R0000		45	11.78

Main technical data

		IEC	UL	CSA
Lugs	Rigid: Solid/Stranded	0.1 ... 2.5 mm²	26 ... 14 AWG	26 ... 14 AWG
	Flexible with insulated ferrule	0.1 ... 2.5 mm²		
	Gauge			
Rated current		24 A	15 A	20 A
Maximum current			20 A	
Rated cross section		2.5 mm²	14 AWG	14 AWG
Rated short-time withstand current (1s)		300 A		
Rated voltage		800 V	600 V	600 V
Impulse withstand voltage		8000 V		
Protection		IP10	NEMA 1	

The connecting capacity data for one Rigid: Solid/Stranded, or one Flexible conductor (when applicable) is a mandatory information required by IEC, UL and CSA standards (Copper conductors). All other data are provided as supplementary information only. For more details, please consult our CB, UL or CSA certificates and technical datasheet available on http://www.TE.com

CE RoHS USR CNR CSA

Mounting instructions

Rail	G32, TH 35-7.5, TH 35-15
Nuts Tool	Flat screwdriver Ø 4 mm Ø 0.157 in
Torque	0.6 ... 0.8 N.m 5.3 ... 7.1 lb.in
Max width of lug	7 mm 0.28 in

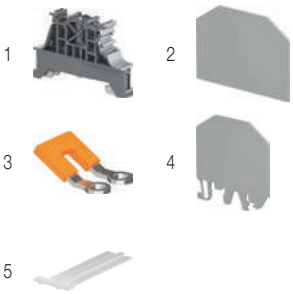

Accessories

	Description			Color	Type	Part Numbers		Pkg qty	Weight (1 pce) g
1	**End stops**	10 mm	0.394 in	Dark grey	BAM4	1SNK900001R0000		50	14.00
2	**End sections**	1.2 mm	0.047 in	Grey	E-RGW2.5	1SNA519003R0000		25	1.89
3	**Lateral jumper bars**	2 poles	24 A (IEC)	Orange	PC-RG2.5-2	1SNA519103R0200		25	3.02
		3 poles	24 A (IEC)		PC-RG2.5-3	1SNA519103R0300		20	4.69
		4 poles	24 A (IEC)		PC-RG2.5-4	1SNA519103R0400		15	6.36
		10 poles	24 A (IEC)		PC-RG2.5-10	1SNA519103R1000		5	16.39
4	**Circuit separators**	1.5 mm	0.059 in	Grey	CS-RGW-S	1SNA519200R0000		25	4.59
5	**Terminal block markers**	Blank marker		White	M-W610PC	1SNA235511R0600		360	8.03
					MG-CPM-01 41090	1SNB041090R0510		1960	0.351

Complete list of accessories is indicated in the terminal block datasheet including end stops.
Some accessories such as jumper bars may modify the terminal block's ratings: Complete information available in the accessories section of the catalog.

Ground Ring lug terminal blocks

Description		Color	Type	Part Numbers		Pkg qty	Weight (1 pce) g
Ground	With 2 studs M3 and captive nuts in wings	Green-yellow	RGW2.5-PE-V0	1SNA511003R0500		45	28.56

1SNC168024S0201

Technical data valid for copper conductors only.

RGW2.5-T Ring lug terminal blocks

Feed-through with test sockets - 9 mm 0.354 in spacing

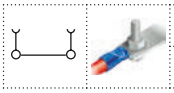

2.5 mm²
14 AWG

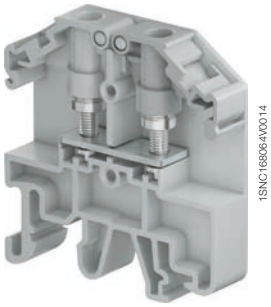

RGW2.5-T

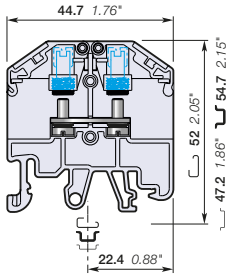

9 mm 0.354 in spacing

Description

- Stud terminal block for ring lug connection,
- Integrated captive nuts in protective wings provide easy and secured connection,
- Ease your test operations with the 2 built-in nuts with test sockets compatible with DIA 2 mm 0.079 in,
- Universal mounting on symmetrical and asymmetrical rails.

Ordering details

Description		Color	Type	Part Number		Pkg qty	Weight (1 pce) g
Feed-through	With 2 studs M3 and captive nuts in wings	Grey	RGW2.5-T-V0	1SNA510103R0000		45	11.58

Main technical data

		IEC	UL	CSA
Lugs	Rigid: Solid/Stranded	0.1 ... 2.5 mm²	26 ... 14 AWG	26 ... 14 AWG
	Flexible with insulated ferrule	0.1 ... 2.5 mm²		
	Gauge			
Rated current		24 A	15 A	20 A
Maximum current			20 A	
Rated cross section		2.5 mm²	14 AWG	14 AWG
Rated short-time withstand current (1s)		300 A		
Rated voltage		800 V	600 V	600 V
Impulse withstand voltage		8000 V		
Protection		IP10	NEMA 1	

Mounting instructions

Rail		G32, TH 35-7.5, TH 35-15
Nuts Tool		Flat screwdriver Ø 4 mm Ø 0.157 in
Torque		0.6 ... 0.8 N.m 5.3 ... 7.1 lb.in
Max width of lug		7 mm 0.28 in

The connecting capacity data for one Rigid: Solid/Stranded, or one Flexible conductor (when applicable) is a mandatory information required by IEC, UL and CSA standards (Copper conductors). All other data are provided as supplementary information only. For more details, please consult our CB, UL or CSA certificates and technical datasheet available on http://www.TE.com

CE RoHS USR CNR CSA

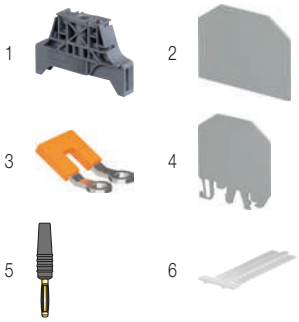

Accessories

	Description			Color	Type	Part Number		Pkg qty	Weight (1 pce) g
1	**End stops**	10 mm	0.394 in	Dark grey	BAM4	1SNK900001R0000		50	14.00
2	**End sections**	1.2 mm	0.047 in	Grey	E-RGW2.5	1SNA519003R0000		25	1.89
3	**Lateral jumper bars**	2 poles	24 A (IEC)	Orange	PC-RG2.5-2	1SNA519103R0200		25	3.02
		3 poles	24 A (IEC)		PC-RG2.5-3	1SNA519103R0300		20	4.69
		4 poles	24 A (IEC)		PC-RG2.5-4	1SNA519103R0400		15	6.36
		10 poles	24 A (IEC)		PC-RG2.5-10	1SNA519103R1000		5	16.39
4	**Circuit separators**	1.5 mm	0.059 in	Grey	CS-RGW-S	1SNA519200R0000		25	4.59
5	**Test plugs**	DIA 2 mm 0.079 in		Black	FC2.MC	1SNA107239R0300		20	1.00
6	**Terminal block markers**	Blank marker		White	M-W610PC	1SNA235511R0600		360	8.03
					MG-CPM-01 41090	1SNB041090R0510		1960	0.351

Complete list of accessories is indicated in the terminal block datasheet including end stops.
Some accessories such as jumper bars may modify the terminal block's ratings: Complete information available in the accessories section of the catalog.

Ground Ring lug terminal blocks

Description		Color	Type	Part Number		Pkg qty	Weight (1 pce) g
Ground	With 2 studs M3 and captive nuts in wings	Green-yellow	RGW2.5-PE-V0	1SNA511003R0500		45	28.56

1SNC168025S0201

Technical data valid for copper conductors only.

RGW6 Ring lug terminal blocks

Feed-through - 11 mm 0.433 in spacing

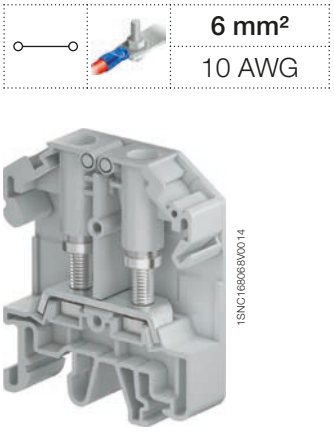

RGW6

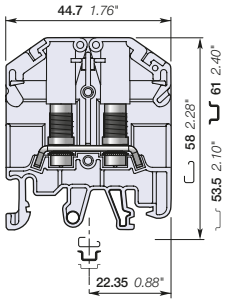

11 mm 0.433 in spacing

6 mm²
10 AWG

Description

- Stud terminal block for ring lug connection,
- Integrated captive nuts in protective wings provide easy and secured connection,
- Universal mounting on symmetrical and asymmetrical rails.

Ordering details

Description		Color	Type	Part Numbers		Pkg qty	Weight (1 pce) g
Feed-through	With 2 studs M4 and captive nuts in wings	Grey	RGW6-V0	1SNA510024R0000		40	19.76

Main technical data

		IEC	UL	CSA
Lugs	Rigid: Solid/Stranded	0.1 ... 6 mm²	22 ... 10 AWG	22 ... 10 AWG
	Flexible with insulated ferrule	0.1 ... 6 mm²		
	Gauge			
Rated current		41 A	30 A	30 A
Maximum current			30 A	
Rated cross section		6 mm²	10 AWG	10 AWG
Rated short-time withstand current (1s)		720 A		
Rated voltage		800 V	600 V	600 V
Impulse withstand voltage		8000 V		
Protection		IP10	NEMA 1	

Mounting instructions

Rail	G32, TH 35-7.5, TH 35-15
Nuts	Flat screwdriver
Tool	Ø 5.5 mm Ø 0.217 in
Torque	0.8 ... 1.2 N.m 7.1 ... 10.6 lb.in
Max width of lug	9.4 mm 0.37 in

The connecting capacity data for one Rigid: Solid/Stranded, or one Flexible conductor (when applicable) is a mandatory information required by IEC, UL and CSA standards (Copper conductors). All other data are provided as supplementary information only. For more details, please consult our CB, UL or CSA certificates and technical datasheet available on http://www.TE.com

CE RoHS USR CNR CSA

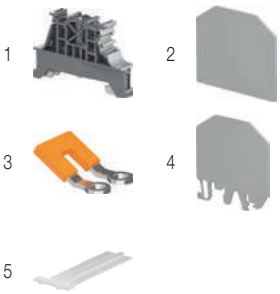

Accessories

	Description			Color	Type	Part Numbers		Pkg qty	Weight (1 pce) g
1	**End stops**	10 mm	0.394 in	Dark grey	BAM4	1SNK900001R0000		50	14.00
2	**End sections**	1.4 mm	0.055 in	Grey	E-RGW6	1SNA519004R0000		50	2.65
3	**Lateral jumper bars**	2 poles	41 A (IEC)	Orange	PC-RG6-2	1SNA519104R0200		25	3.44
		3 poles	41 A (IEC)		PC-RG6-3	1SNA519104R0300		20	5.40
		4 poles	41 A (IEC)		PC-RG6-4	1SNA519104R0400		15	7.33
		7 poles	41 A (IEC)		PC-RG6-7	1SNA519104R0700		5	13.24
		10 poles	41 A (IEC)		PC-RG6-10	1SNA519104R1000		5	19.05
4	**Circuit separators**	1.5 mm	0.059 in	Grey	CS-RGW-S	1SNA519200R0000		25	4.59
5	**Terminal block markers**	Blank marker		White	M-W810PC	1SNA235510R0800		260	0.27
					MG-CPM-01 41096	1SNB041096R0810		1120	0.400

Complete list of accessories is indicated in the terminal block datasheet including end stops.
Some accessories such as jumper bars may modify the terminal block's ratings: Complete information available in the accessories section of the catalog.

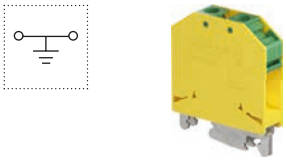

Ground Ring lug terminal blocks

Description		Color	Type	Part Numbers		Pkg qty	Weight (1 pce) g
Ground	With 2 studs M4 and captive nuts in wings	Green-yellow	RGW6-PE-V0	1SNA511024R0500		40	31.76

1SNC168016S0201

Technical data valid for copper conductors only.

RGW6-T Ring lug terminal blocks

Feed-through with test sockets - 11 mm 0.433 in spacing

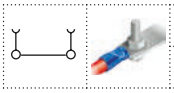

6 mm²
10 AWG

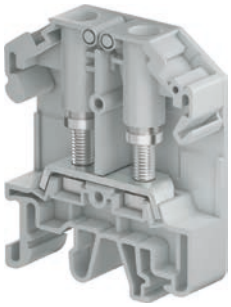

1SNC168068V0014

RGW6-T

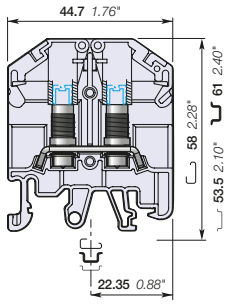

11 mm 0.433 in spacing

Description

- Stud terminal block for ring lug connection,
- Integrated captive nuts in protective wings provide easy and secured connection,
- Ease your test operations with the 2 built-in nuts with test sockets compatible with DIA 4 mm 0.157 in,
- Universal mounting on symmetrical and asymmetrical rails.

Ordering details

Description		Color	Type	Part Number		Pkg qty	Weight (1 pce) g
Feed-through	With 2 studs M4 and captive nuts in wings	Grey	RGW6-T-V0	1SNA510124R0000		40	19.04

Main technical data

		IEC	UL	CSA
Lugs	Rigid: Solid/Stranded	0.1 ... 6 mm²	22 ... 10 AWG	22 ... 10 AWG
	Flexible with insulated ferrule	0.1 ... 6 mm²		
	Gauge			
Rated current		41 A	30 A	30 A
Maximum current			30 A	
Rated cross section		6 mm²	10 AWG	10 AWG
Rated short-time withstand current (1s)		720 A		
Rated voltage		800 V	600 V	600 V
Impulse withstand voltage		8000 V		
Protection		IP10	NEMA 1	

Mounting instructions

Rail	G32, TH 35-7.5, TH 35-15
Nuts Tool	Flat screwdriver Ø 5.5 mm Ø 0.217 in
Torque	0.8 ... 1.2 N.m 7.1 ... 10.6 lb.in
Max width of lug	9.4 mm 0.37 in

The connecting capacity data for one Rigid: Solid/Stranded, or one Flexible conductor (when applicable) is a mandatory information required by IEC, UL and CSA standards (Copper conductors). All other data are provided as supplementary information only. For more details, please consult our CB, UL or CSA certificates and technical datasheet available on http://www.TE.com

CE RoHS USR CNR CSA

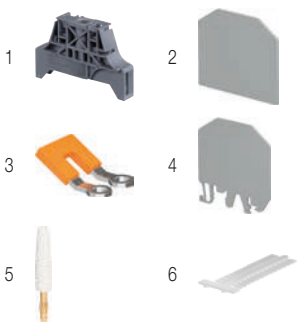

Accessories

	Description			Color	Type	Part Number		Pkg qty	Weight (1 pce) g
1	**End stops**	10 mm	0.394 in	Dark grey	BAM4	1SNK900001R0000		50	14.00
2	**End sections**	1.4 mm	0.055 in	Grey	E-RGW6	1SNA519004R0000		50	2.65
3	**Lateral jumper bars**	2 poles	41 A (IEC)	Orange	PC-RG6-2	1SNA519104R0200		25	3.44
		3 poles	41 A (IEC)		PC-RG6-3	1SNA519104R0300		20	5.40
		4 poles	41 A (IEC)		PC-RG6-4	1SNA519104R0400		15	7.33
		7 poles	41 A (IEC)		PC-RG6-7	1SNA519104R0700		5	13.24
		10 poles	41 A (IEC)		PC-RG6-10	1SNA519104R1000		5	19.05
4	**Circuit separators**	1.5 mm	0.059 in	Grey	CS-RGW-S	1SNA519200R0000		25	4.59
5	**Test plugs**	DIA 4 mm 0.157 in		White	FC4	1SNA167860R0100		10	10.00
6	**Terminal block markers**	Blank marker		White	M-W810PC	1SNA235510R0800		260	0.27
					MG-CPM-01 41096	1SNB041096R0810		1120	0.400

Complete list of accessories is indicated in the terminal block datasheet including end stops.
Some accessories such as jumper bars may modify the terminal block's ratings: Complete information available in the accessories section of the catalog.

Ground Ring lug terminal blocks

Description		Color	Type	Part Number		Pkg qty	Weight (1 pce) g
Ground	With 2 studs M4 and captive nuts in wings	Green-yellow	RGW6-PE-V0	1SNA511024R0500		40	31.76

1SNC168019S0201

Technical data valid for copper conductors only.

RGW25-M5 Ring lug terminal blocks

Feed-through - 18 mm 0.709 in spacing

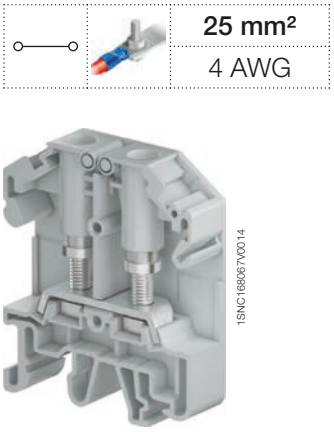

RGW25-M5

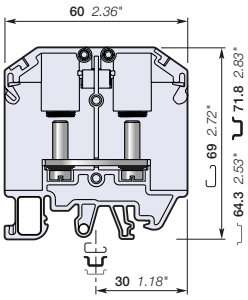

18 mm 0.709 in spacing

25 mm²

4 AWG

Description

- Stud terminal block for ring lug connection,
- Integrated captive nuts in protective wings provide easy and secured connection,
- Universal mounting on symmetrical and asymmetrical rails.

Ordering details

Description		Color	Type	Part Numbers		Pkg qty	Weight (1 pce) g
Feed-through	With 2 studs M5 and captive nuts in wings	Grey	RGW25-M5-V0	1SNA510005R0000		10	49.10

Main technical data

		IEC	UL	CSA
Lugs	Rigid: Solid/Stranded	0.1 ... 25 mm²	26 ... 4 AWG	26 ... 4 AWG
	Flexible with insulated ferrule	0.1 ... 25 mm²		
	Gauge			
Rated current		101 A	85 A	100 A
Maximum current			115 A	
Rated cross section		25 mm²	4 AWG	4 AWG
Rated short-time withstand current (1s)		3000 A		
Rated voltage		800 V	600 V	600 V
Impulse withstand voltage		8000 V		
Protection		IP10	NEMA 1	

Mounting instructions

Rail	G32, TH 35-7.5, TH 35-15
Nuts Tool	Flat screwdriver Ø 5.5 mm Ø 0.217 in
Torque	3 ... 3.5 N.m 26.5 ...31 lb.in
Max width of lug	16.2 mm 0.64 in

The connecting capacity data for one Rigid: Solid/Stranded, or one Flexible conductor (when applicable) is a mandatory information required by IEC, UL and CSA standards (Copper conductors). All other data are provided as supplementary information only. For more details, please consult our CB, UL or CSA certificates and technical datasheet available on http://www.TE.com

CE RoHS USR CNR CSA

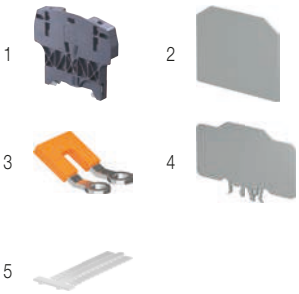

Accessories

	Description			Color	Type	Part Numbers		Pkg qty	Weight (1 pce) g
1	**End stops**	10 mm	0.394 in	Dark grey	BAZH1	1SNK900102R0000		20	24.00
2	**End sections**	1.4 mm	0.055 in	Grey	E-RGW25	1SNA519005R0000		25	0.146
3	**Lateral jumper bars**	2 poles	101 A (IEC)	Orange	PC-RG25-2	1SNA519106R0200		25	8.81
4	**Circuit separators**	2 mm	0.079 in	Grey	CS-RGW-L	1SNA519201R0000		25	13.72
5	**Terminal block markers**	Blank marker		White	M-W1010PC	1SNA235512R1000		200	0.10
					MG-CPM-01 41096	1SNB041096R0810		1120	0.400

Complete list of accessories is indicated in the terminal block datasheet including end stops.
Some accessories such as jumper bars may modify the terminal block's ratings: Complete information available in the accessories section of the catalog.

1SNC168028S0201

Technical data valid for copper conductors only.

RGW25-M6 Ring lug terminal blocks

Feed-through - 18 mm 0.709 in spacing

25 mm²
4 AWG

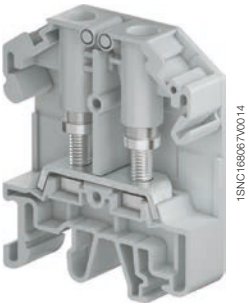

RGW25-M6

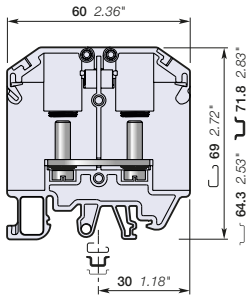

18 mm 0.709 in spacing

Description

- Stud terminal block for ring lug connection,
- Integrated captive nuts in protective wings provide easy and secured connection,
- Universal mounting on symmetrical and asymmetrical rails.

Ordering details

Description		Color	Type	Part Numbers		Pkg qty	Weight (1 pce) g
Feed-through	With 2 studs M6 and captive nuts in wings	Grey	RGW25-M6-V0	1SNA510006R0000		10	48.44

Main technical data

		IEC	UL	CSA
Lugs	Rigid: Solid/Stranded	0.1 ... 25 mm²	26 ... 4 AWG	26 ... 4 AWG
	Flexible with insulated ferrule	0.1 ... 25 mm²		
	Gauge			
Rated current		101 A	85 A	100 A
Maximum current			115 A	
Rated cross section		25 mm²	4 AWG	4 AWG
Rated short-time withstand current (1s)		3000 A		
Rated voltage		800 V	600 V	600 V
Impulse withstand voltage		8000 V		
Protection		IP10	NEMA 1	

Mounting instructions

Rail	G32, TH 35-7.5, TH 35-15
Nuts	Flat screwdriver
Tool	Ø 5.5 mm Ø 0.217 in
Torque	3.2 ... 3.5 N.m 28.3 ...32.7 lb.in
Max width of lug	16.2 mm 0.64 in

The connecting capacity data for one Rigid: Solid/Stranded, or one Flexible conductor (when applicable) is a mandatory information required by IEC, UL and CSA standards (Copper conductors). All other data are provided as supplementary information only. For more details, please consult our CB, UL or CSA certificates and technical datasheet available on http://www.TE.com

CE RoHS USR CNR CSA

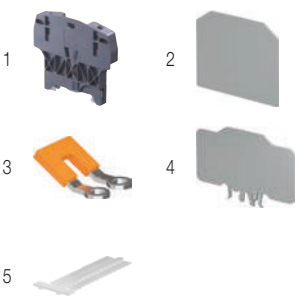

Accessories

	Description			Color	Type	Part Numbers		Pkg qty	Weight (1 pce) g
1	**End stops**	10 mm	0.394 in	Dark grey	BAZH1	1SNK900102R0000		20	24.00
2	**End sections**	1.4 mm	0.055 in	Grey	E-RGW25	1SNA519005R0000		25	0.146
3	**Lateral jumper bars**	2 poles	101 A (IEC)	Orange	PC-RG25-2	1SNA519106R0200		25	8.81
4	**Circuit separators**	2 mm	0.079 in	Grey	CS-RGW-L	1SNA519201R0000		25	13.72
5	**Terminal block markers**	Blank marker		White	M-W1010PC	1SNA235512R1000		200	0.10
					MG-CPM-01 41096	1SNB041096R0810		1120	0.400

Complete list of accessories is indicated in the terminal block datasheet including end stops.
Some accessories such as jumper bars may modify the terminal block's ratings: Complete information available in the accessories section of the catalog.

Technical data valid for copper conductors only.

1SNC168029S0201

RGW2.5-PE Ring lug terminal blocks

Ground - 10 mm 0.394 in spacing

RGW2.5-PE

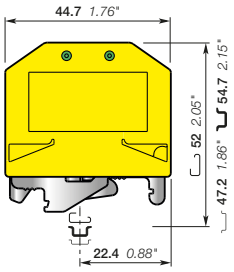

10 mm 0.394 in spacing

2.5 mm²
14 AWG

Description

- Stud terminal block for ring lug connection,
- Integrated captive nuts in protective wings provide easy and secured connection,
- Universal mounting on symmetrical and asymmetrical rails.

Ordering details

Description		Color	Type	Part Number		Pkg qty	Weight (1 pce) g
Ground	With 2 studs M3 and captive nuts in wings	Green-yellow	RGW2.5-PE-V0	1SNA511003R0500		45	28.56

Main technical data

		IEC	UL	CSA
Lugs	Rigid: Solid/Stranded	0.1 … 2.5 mm²	26 ... 14 AWG	26 ... 14 AWG
	Flexible with insulated ferrule	0.1 … 2.5 mm²		
	Gauge			
Rated cross section		2.5 mm²	14 AWG	14 AWG
Rated short-time withstand current (1s)		300 A		
Protection		IP10	NEMA 1	

Mounting instructions

Rail	G32, TH 35-7.5, TH 35-15
Nuts Tool	Flat screwdriver Ø 4 mm Ø 0.157 in
Torque	0.6 ... 0.8 N.m 5.3 ... 7.1 lb.in
Rail connection screw Tool	Flat screwdriver Ø 4 mm Ø 0.157 in
Torque	0.5 ... 0.6 N.m 4.4 ... 5.3 lb.in
Max width of lug	7 mm 0.28 in

The connecting capacity data for one Rigid: Solid/Stranded, or one Flexible conductor (when applicable) is a mandatory information required by IEC, UL and CSA standards (Copper conductors). All other data are provided as supplementary information only. For more details, please consult our CB, UL or CSA certificates and technical datasheet available on http://www.TE.com

CE RoHS USR CNR CSA

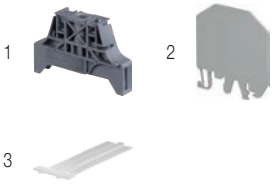

Accessories

	Description			Color	Type	Part Number		Pkg qty	Weight (1 pce) g
1	**End stops**	10 mm	0.394 in	Dark grey	BAM4	1SNK900001R0000		50	14.00
2	**Circuit separators**	1.5 mm	0.059 in	Grey	CS-RGW-S	1SNA519200R0000		25	4.59
3	**Terminal block markers**	Blank marker		White	M-W610PC	1SNA235511R0600		360	8.03
					MG-CPM-01 41090	1SNB041090R0510		1960	0.351

Complete list of accessories is indicated in the terminal block datasheet including end stops.
Some accessories such as jumper bars may modify the terminal block's ratings: Complete information available in the accessories section of the catalog.

1SNC168026S0201

Technical data valid for copper conductors only.

RGW6-PE Ring lug terminal blocks

Ground - 12 mm 0.472 in spacing

RGW6-PE

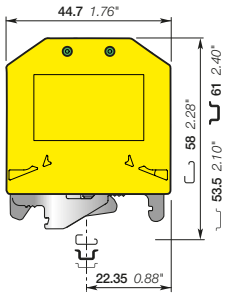

12 mm 0.472 in spacing

	6 mm²
	10 AWG

Description

- Stud terminal block for ring lug connection,
- Integrated captive nuts in protective wings provide easy and secured connection,
- Universal mounting on symmetrical and asymmetrical rails.

Ordering details

Description		Color	Type	Part Number		Pkg qty	Weight (1 pce) g
Ground	With 2 studs M4 and captive nuts in wings	Green-yellow	RGW6-PE-V0	1SNA511024R0500		40	31.76

Main technical data

		IEC	UL	CSA
Lugs	Rigid: Solid/Stranded	0.1 ... 6 mm²	22 ... 10 AWG	22 ... 10 AWG
	Flexible with insulated ferrule	0.1 ... 6 mm²		
	Gauge			
Rated cross section		6 mm²	10 AWG	10 AWG
Rated short-time withstand current (1s)		720 A		
Protection		IP10	NEMA 1	

Mounting instructions

Rail		G32, TH 35-7.5, TH 35-15
Nuts Tool		Flat screwdriver Ø 5.5 mm Ø 0.217 in
Torque		0.8 ... 1.2 N.m 7.1 ... 10.6 lb.in
Rail connection screw Tool		Flat screwdriver Ø 4 mm Ø 0.157 in
Torque		0.5 ... 0.8 N.m 4.4 ... 5.3 lb.in
Max width of lug		9.4 mm 0.37 in

The connecting capacity data for one Rigid: Solid/Stranded, or one Flexible conductor (when applicable) is a mandatory information required by IEC, UL and CSA standards (Copper conductors). All other data are provided as supplementary information only. For more details, please consult our CB, UL or CSA certificates and technical datasheet available on http://www.TE.com

CE RoHS USR CNR CSA

1

2

3

Accessories

	Description			Color	Type	Part Number		Pkg qty	Weight (1 pce) g
1	**End stops**	10 mm	0.394 in	Dark grey	BAM4	1SNK900001R0000		50	14.00
2	**Circuit separators**	1.5 mm	0.059 in	Grey	CS-RGW-S	1SNA519200R0000		25	4.59
3	**Terminal block markers**	Blank marker		White	M-W810PC	1SNA235510R0800		260	0.27
					MG-CPM-01 41096	1SNB041096R0810		1120	0.400

Complete list of accessories is indicated in the terminal block datasheet including end stops.
Some accessories such as jumper bars may modify the terminal block's ratings: Complete information available in the accessories section of the catalog.

1SNC168017S0201

Technical data valid for copper conductors only.

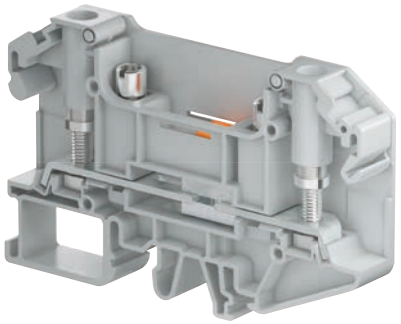

Secure your measurement operations

With its 100% captive wire connection, RGW test & measurement terminal blocks offer a safe and ergonomic test measurement operation.

High performances

- 6 mm² 10 AWG
- 41 A (IEC) 30 A (UL)
- 1000 V (IEC) 600V (UL).

Features

- Test sockets provided on every disconnect blocks RGW6-ST-1…
- Aligned feed-through version RGW6-R1… available for all types of schematics.

Typical measurement configuration

Common point on the transformers

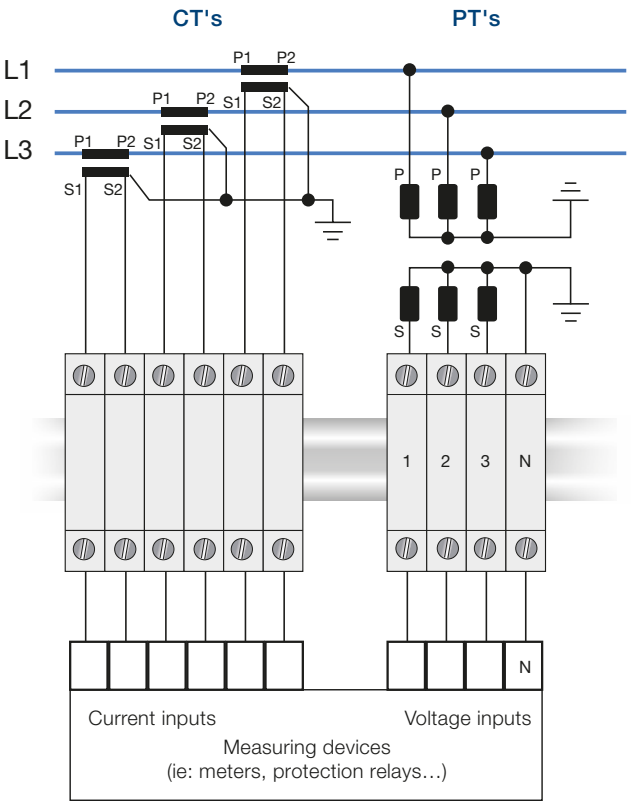

Bill of material

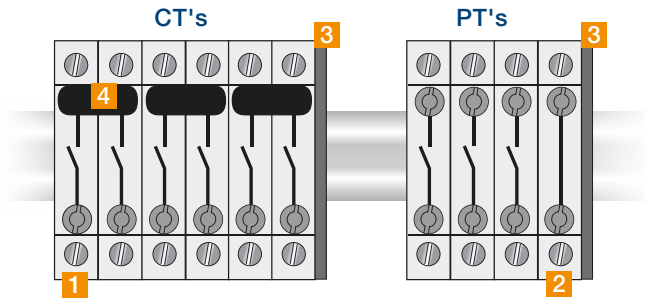

	Description	Type	Order code	Qty needed CT's	Qty needed PT's
1	Terminal block	RGW6-ST-1-V0	1SNA512124R0000	6	3
2	Terminal block	RGW6-R1-V0	1SNA510224R0000	0	1
3	End section	E-RGW6-ST	1SNA519004R0100	1	1
4	Short-circuit plug	SCP12-2	1SNA519300R0200	3	0

1SNC168038S0201

RGW6-ST-1 Ring lug terminal blocks

Test disconnect with sliding link - 11 mm 0.433 in spacing

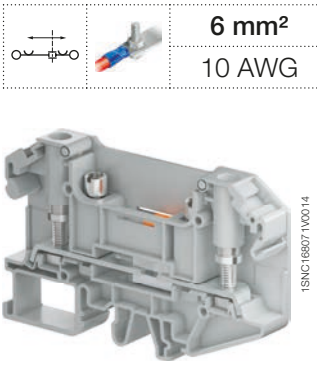

6 mm²
10 AWG

1SNC168071V0014

RGW6-ST-1

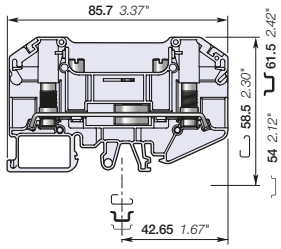

11 mm 0.433 in spacing

Description

- Stud terminal block for ring lug connection,
- Integrated captive nuts in protective wings provide easy and secured connection,
- Secure your disconnect operations with the disconnect sliding link operated with a standard screwdriver,
- Ease your test operations with the 2 independent built-in test sockets compatible with DIA 4 mm 0.157 in test plugs,
- Universal mounting on symmetrical and asymmetrical rails.

Ordering details

Description		Color	Type	Part Number		Pkg qty	Weight (1 pce) g
Disconnect	With 2 studs M4 and captive nuts in wings	Grey	RGW6-ST-1-V0	1SNA512124R0000		25	33.66

Main technical data

		IEC	UL	CSA
Lugs	Rigid: Solid/Stranded	0.1 ... 6 mm²	22 ... 10 AWG	22 ... 10 AWG
	Flexible with insulated ferrule	0.1 ... 6 mm²		
	Gauge			
Rated current		41 A	30 A	30 A
Maximum current			30 A	
Rated cross section		6 mm²	10 AWG	10 AWG
Rated voltage		1000 V	600 V	600 V
Rated short-time withstand current (1s)		720 A		
Impulse withstand voltage		8000 V		
Protection		IP10	NEMA 1	

Mounting instructions

Rail	G32, TH 35-7.5, TH 35-15
Nuts	Flat screwdriver
Tool	Ø 5.5 mm Ø 0.217 in
Torque	0.8 ... 1.2 N.m 7.1 ... 10.6 lb.in
Disconnect device	Flat screwdriver
Tool	Ø 4 mm Ø 0.157 in
Torque	0.5 ... 0.8 N.m 4.4 ... 5.3 lb.in
Max width of lug	9.4 mm 0.37 in

The connecting capacity data for one Rigid: Solid/Stranded, or one Flexible conductor (when applicable) is a mandatory information required by IEC, UL and CSA standards (Copper conductors). All other data are provided as supplementary information only. For more details, please consult our CB, UL or CSA certificates and technical datasheet available on http://www.TE.com

CE RoHS USR CNR CSA

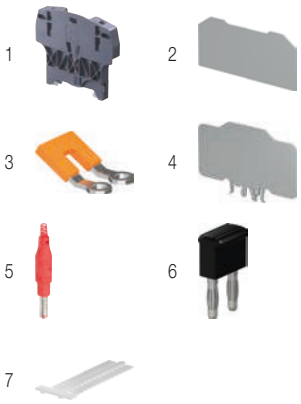

Accessories

	Description			Color	Type	Part Number		Pkg qty	Weight (1 pce) g
1	**End stops**	10 mm	0.394 in	Dark grey	BAZH1	1SNK900102R0000		20	24.00
2	**End sections**	1.4 mm	0.055 in	Grey	E-RGW6-ST	1SNA519004R0100		25	5.18
3	**Lateral jumper bars**	2 poles	41 A (IEC)	Orange	PC-RG6-2	1SNA519104R0200		25	3.44
		3 poles	41 A (IEC)		PC-RG6-3	1SNA519104R0300		20	5.40
		4 poles	41 A (IEC)		PC-RG6-4	1SNA519104R0400		15	7.33
		7 poles	41 A (IEC)		PC-RG6-7	1SNA519104R0700		5	13.24
		10 poles	41 A (IEC)		PC-RG6-10	1SNA519104R1000		5	19.05
4	**Circuit separators**	2 mm	0.079 in	Grey	CS-RGW-L	1SNA519201R0000		25	13.72
5	**Test plugs**	DIA 4 mm 0.157 in IP20		Red	FC4-1	1SNA167927R1000		10	11.00
6	**Short circuit plugs**			Black	SCP12-2	1SNA519300R0200		10	
7	**Terminal block markers**	Blank marker		White	M-W810PC	1SNA235510R0800		260	0.27
					MG-CPM-01 41096	1SNB041096R0810		1120	0.400

Complete list of accessories is indicated in the terminal block datasheet including end stops.
Some accessories such as jumper bars may modify the terminal block's ratings: Complete information available in the accessories section of the catalog.

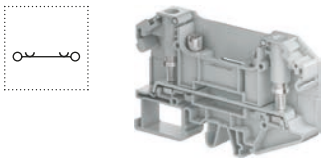

Feed-through Ring lug terminal blocks

Description		Color	Type	Part Number		Pkg qty	Weight (1 pce) g
Feed-through	With 2 studs M4 and captive nuts in wings	Grey	RGW6-R1-V0	1SNA510224R0000		25	36.42

Technical data valid for copper conductors only.

1SNC168018S0201

RGW6-R1 Ring lug terminal blocks

Feed-through - 11 mm 0.433 in spacing

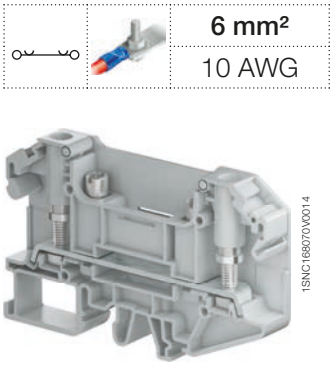

6 mm²
10 AWG

1SNC168070V0014

RGW6-R1

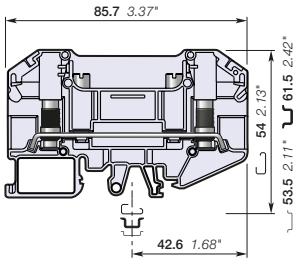

11 mm 0.433 in spacing

Description

- Stud terminal block for ring lug connection,
- Feed-through with the same profile as disconnect terminal block RGW6-ST-1…,
- Integrated captive nuts in protective wings provide easy and secured connection,
- Universal mounting on symmetrical and asymmetrical rails.

Ordering details

Description		Color	Type	Part Number		Pkg qty	Weight (1 pce) g
Feed-through	With 2 studs M4 and captive nuts in wings	Grey	RGW6-R1-V0	1SNA510224R0000		25	36.42

Main technical data

		IEC	UL	CSA
Lugs	Rigid: Solid/Stranded	0.1 … 6 mm²	22 … 10 AWG	22 … 10 AWG
	Flexible with insulated ferrule	0.1 … 6 mm²		
	Gauge			
Rated current		41 A	30 A	30 A
Maximum current			30 A	
Rated cross section		6 mm²	10 AWG	10 AWG
Rated short-time withstand current (1s)		720 A		
Rated voltage		1000 V	600 V	600 V
Impulse withstand voltage		8000 V		
Protection		IP10	NEMA 1	

The connecting capacity data for one Rigid: Solid/Stranded, or one Flexible conductor (when applicable) is a mandatory information required by IEC, UL and CSA standards (Copper conductors). All other data are provided as supplementary information only. For more details, please consult our CB, UL or CSA certificates and technical datasheet available on http://www.TE.com

CE RoHS USR CNR CSA

Mounting instructions

Rail	G32, TH 35-7.5, TH 35-15
Nuts	Flat screwdriver
Tool	Ø 5.5 mm Ø 0.217 in
Torque	0.8 … 1.2 N.m 7.1 … 10.6 lb.in
Max width of lug	9.4 mm 0.37 in

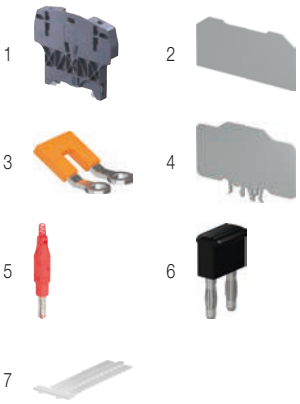

Accessories

	Description			Color	Type	Part Number		Pkg qty	Weight (1 pce) g
1	**End stops**	10 mm	0.394 in	Dark grey	BAZH1	1SNK900102R0000		20	24.00
2	**End sections**	1.4 mm	0.055 in	Grey	E-RGW6-ST	1SNA519004R0100		25	5.18
3	**Lateral jumper bars**	2 poles	41 A (IEC)	Orange	PC-RG6-2	1SNA519104R0200		25	3.44
		3 poles	41 A (IEC)		PC-RG6-3	1SNA519104R0300		20	5.40
		4 poles	41 A (IEC)		PC-RG6-4	1SNA519104R0400		15	7.33
		7 poles	41 A (IEC)		PC-RG6-7	1SNA519104R0700		5	13.24
		10 poles	41 A (IEC)		PC-RG6-10	1SNA519104R1000		5	19.05
4	**Circuit separators**	2 mm	0.079 in	Grey	CS-RGW-L	1SNA519201R0000		25	13.72
5	**Test plugs**	DIA 4 mm	0.157 in IP20	Red	FC4-1	1SNA167927R1000		10	11.00
6	**Short circuit plugs**			Black	SCP12-2	1SNA519300R0200		10	
7	**Terminal block markers**	Blank marker		White	M-W810PC	1SNA235510R0800		260	0.27
					MG-CPM-01 41096	1SNB041096R0810		1120	0.400

Complete list of accessories is indicated in the terminal block datasheet including end stops.
Some accessories such as jumper bars may modify the terminal block's ratings: Complete information available in the accessories section of the catalog.

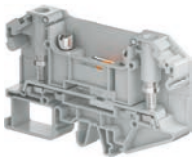

Disconnect Ring lug terminal blocks

Description		Color	Type	Part Number		Pkg qty	Weight (1 pce) g
Disconnect	With 2 studs M4 and captive nuts in wings	Grey	RGW6-ST-1-V0	1SNA512124R0000		25	33.66

1SNC168027S0201

Technical data valid for copper conductors only.

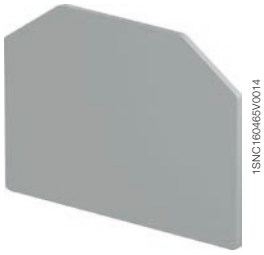

E-RGW2.5

E-RGW2.5 end sections

Description

– End section compatible with RGW2.5... and RGW2.5-T... terminal block

Ordering details

Description	Color	Type	Part Number		Pkg qty	Weight (1 pce) g
1.2 mm 0.047 in spacing	Grey	E-RGW2.5	1SNA519003R0000		25	1.89

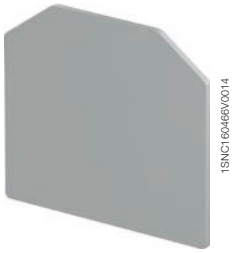

E-RGW6

E-RGW6 end sections

Description

– End section compatible with RGW6... and RGW6-T... terminal block

Ordering details

Description	Color	Type	Part Number		Pkg qty	Weight (1 pce) g
1.4 mm 0.0551 in spacing	Grey	E-RGW6	1SNA519004R0000		50	2.65

E-RGW6-ST

E-RGW6-ST end sections

Description

– End section compatible with RGW6-ST-1… and RGW6-R1... terminal block

Ordering details

Description	Color	Type	Part Number		Pkg qty	Weight (1 pce) g
1.4 mm 0.0551 in spacing	Grey	E-RGW6-ST	1SNA519004R0100		25	5.18

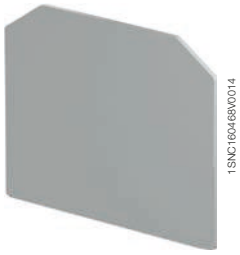

E-RGW25

E-RGW25 end sections

Description

– End section compatible with RGW25... terminal block

Ordering details

Description	Color	Type	Part Number		Pkg qty	Weight (1 pce) g
1.4 mm 0.0551 in spacing	Grey	E-RGW25	1SNA519005R0000		25	0.146

Main technical data

Material specifications	Insulating material	Polyamide	
	Flammability	V0	
	NF F 16 101	I2F2	
Ambient temperature min/max	Service IEC 60068-2-1	-40 ... +100 °C	-40 ... +212 °C
	Storage	-40 ... +100 °C	-40 ... +212 °C
	Installing	-25 ... +70 °C	-13 ... +167 °C

All the main technical data provided are "manufacturer" values.

CE RoHS

1SNC168035S0201

Technical data valid for copper conductors only.

1SNC160469V0014

PC-RG2.5

Lateral jumper bars

Description

- Lateral jumper bar for ring lug terminal block,
- Allow the connection of consecutive blocks,
- Compatible with RGW terminal block.

Ordering details

Description				Color	Type	Part Number		Pkg qty	Weight (1 pce) g
Compatible with M3 stud. For blocks RGW2.5...									
9 mm	0.354 in	2 poles	24 A (IEC)	Orange	PC-RG2.5-2	1SNA519103R0200		25	3.02
		3 poles	24 A (IEC)		PC-RG2.5-3	1SNA519103R0300		20	4.69
		4 poles	24 A (IEC)		PC-RG2.5-4	1SNA519103R0400		15	6.36
		10 poles	24 A (IEC)		PC-RG2.5-10	1SNA519103R1000		5	16.39
Compatible with M4 stud. For blocks RGW6...									
11 mm	0.433 in	2 poles	41 A (IEC)	Orange	PC-RG6-2	1SNA519104R0200		25	3.44
		3 poles	41 A (IEC)		PC-RG6-3	1SNA519104R0300		20	5.40
		4 poles	41 A (IEC)		PC-RG6-4	1SNA519104R0400		15	7.33
		7 poles	41 A (IEC)		PC-RG6-7	1SNA519104R0700		5	13.24
		10 poles	41 A (IEC)		PC-RG6-10	1SNA519104R1000		5	19.05
Compatible with M5 or M6 stud. For blocks RGW25...									
18 mm	0.709 in	2 poles	101 A (IEC)	Orange	PC-RG25-2	1SNA519106R0200		25	8.81

Main technical data

Material specifications	Insulating material	Polyamide	
	Flammability	V0	
	NF F 16 101	I2F2	
Ambient temperature min/max	Service IEC 60068-2-1	-40 ... +100 °C	-40 ... +212 °C
	Storage	-40 ... +100 °C	-40 ... +212 °C
	Installing	-25 ... +70 °C	-13 ... +167 °C

All the main technical data provided are "manufacturer" values.

CE RoHS

1SNC168036S0201

Technical data valid for copper conductors only.

CS-RGW-L

CS-RGW circuit separators

Description

- Circuit separator for RGW terminal blocks,
- Ease the visual identification of the several circuits within the terminal block assemblies,
- Compatible with all RGW terminal blocks.

Ordering details

Description	Color	Type	Part Number		Pkg qty	Weight (1 pce) g
2 mm 0.078 in spacing	Grey	CS-RGW-L	1SNA519201R0000		25	13.72

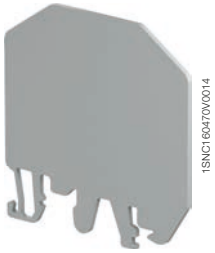

CS-RGW-S

CS-RGW circuit separators

Description

- Circuit separator for RGW terminal blocks,
- Ease the visual identification of the several circuits within the terminal block assemblies,
- Compatible with RGW feed-through and ground terminal blocks up to 11 mm 0.433 in spacing.

Ordering details

Description	Color	Type	Part Number		Pkg qty	Weight (1 pce) g
1.5 mm 0.059 in spacing	Grey	CS-RGW-S	1SNA519200R0000		25	4.59

Main technical data

Material specifications	Insulating material	Polyamide	
	Flammability	V0	
	NF F 16 101	I2F2	
Ambient temperature min/max	Service IEC 60068-2-1	-40 ... +100 °C	-40 ... +212 °C
	Storage	-40 ... +100 °C	-40 ... +212 °C
	Installing	-25 ... +70 °C	-13 ... +167 °C

All the main technical data provided are "manufacturer" values.

CE RoHS

1SNC168037S0201

Technical data valid for copper conductors only.

Markers and marking systems

Marking systems			Support plates			Markers		
	Type	Part Number		Type	Part Number		Type	Part Number
	MG3 KIT	1SNB419001R0000		MG2-QTB 991011	1SNB991011R0000	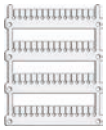	MG-CPM-01 41090 MG-CPM-01-41096	1SNB041090R0510 1SNB041096R0810
	AMS 600 KIT AMS 250 BASIC KIT	1SNA360000R2400 1SNA360000R2500		SPRC 26	1SNA360036R0300	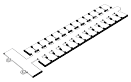	M-W610PC M-W810PC M-W1010PC	1SNA235511R0600 1SNA235510R0800 1SNA235512R1000

1SNC168039S0201

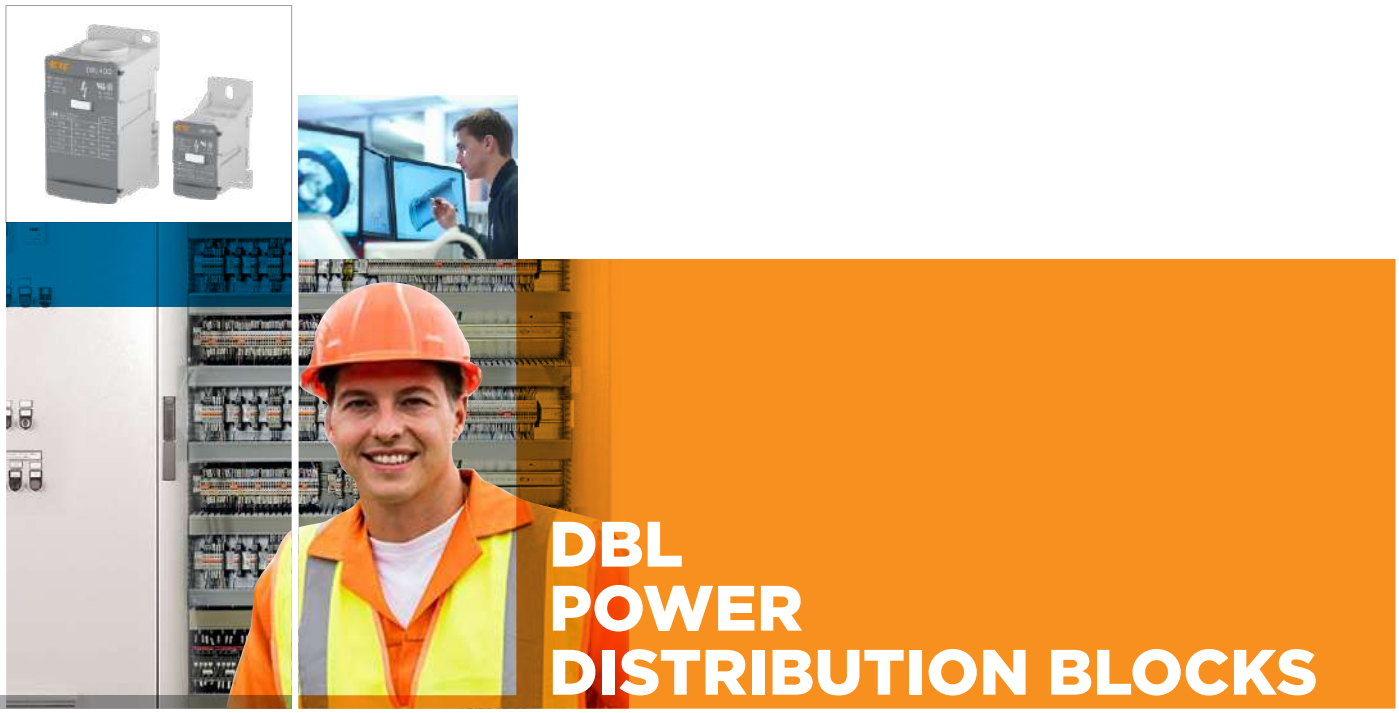

DBL POWER DISTRIBUTION BLOCKS

ENTRELEC Terminal Blocks

The clever distribution concept

The exclusive compact and modular design of our power distribution blocks allows easy installation combined with a great flexibility of use.

Easy to install

3 configurations in 1 product:

Single pole splitter: split of power main input into several outputs
Multiple poles splitter: interlocking function and ready to use marking kit (L1, L2, L3, N, PE, +, -) delivered with each block
Grouping: of several inputs into 1 output (solar application).

Flexible cover facilitates identification & wiring:

- Reversible, two directions opening, snap-on
- All wiring data's and specifications visible on top.

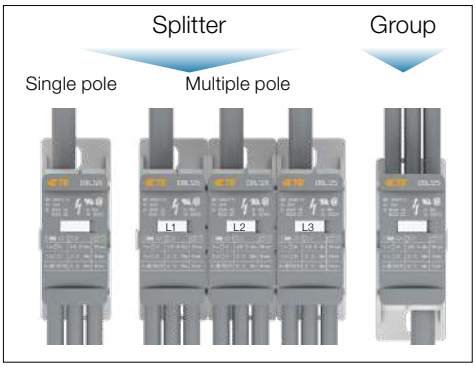

Space saving

Panel space saving:

Save up to 50 % rail space compare to conventional distribution bars thanks to our modular compact design.

1 500 V DC:

Voltage rating adapted to most recent solar inverters requirements.

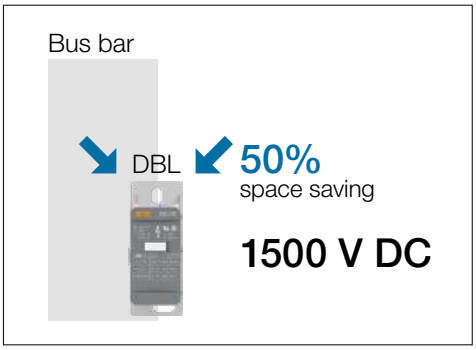

Increased productivity

Reduced wiring, inventories, hardware and assembly costs:

- Reduce assembly time by 80 % compared to conventional systems
- Our modular and touch proof concept eliminates the needs for bus bars, isolators, fasteners, protection screens…
- Accept **aluminum & copper** conductors
- **1** product in stock for **3 possible** configurations.

1SNC166009S0201 - Rev. D

Distributing power in industrial and commercial panels HVAC, machinery, power distribution unit (PDU), commercial panel

3 Phases
DBL80, DBL125, DBL160, DBL175, DBL250, DBL400, DBL125-3, DBL175-C-3

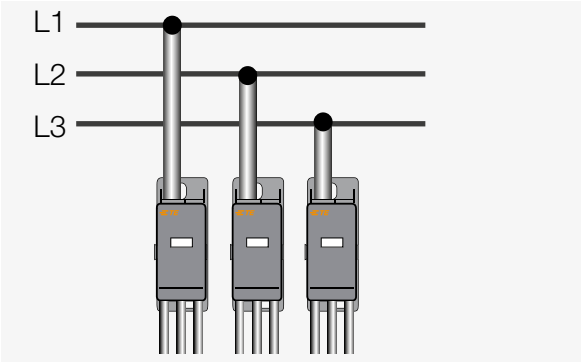

3 Phases for flat conductor
DBL250-F, DBL500-F

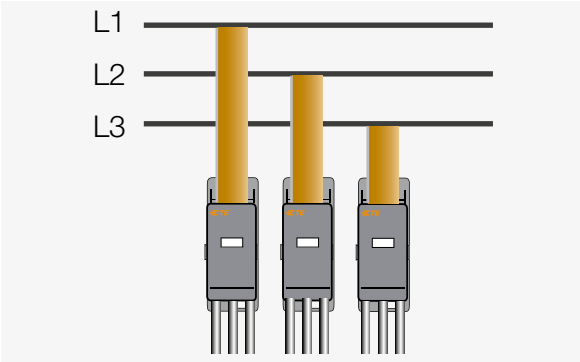

3 Phases with jumpering wire
DBL80, DBL125, DBL160, DBL175, DBL400-PV, DBL125-3, DBL175-C-3 and DBL500-22

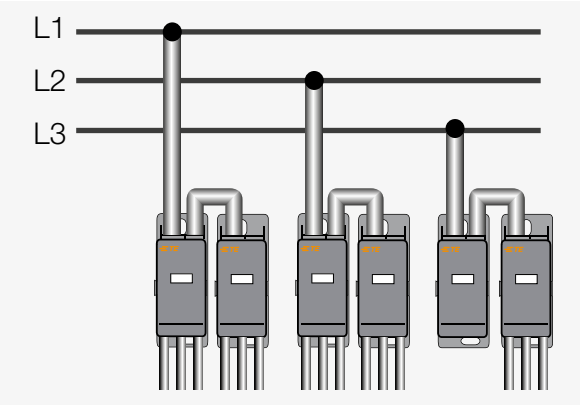

2 in/2 out configuration
DBL500-22

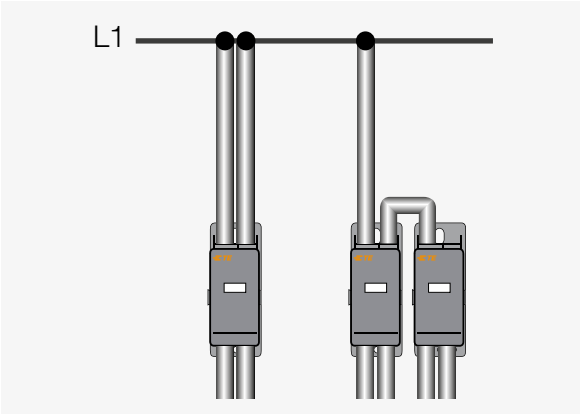

Combining PV strings in one single output
PV combiner box, central inverter in a solar power plant

Up to 12 PV strings
DBL80…DBL500-F
DBL400-PV specifically designed for solar application with 12 inputs of 16 mm².

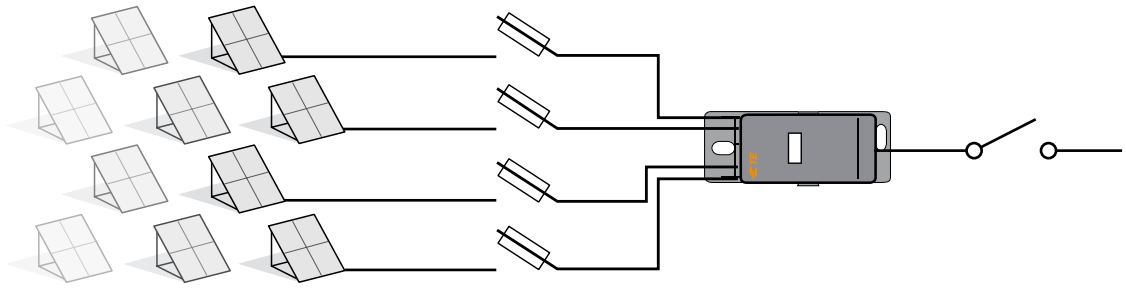

1SNC166027S0201 - Rev. C

Range overview 1000 V AC / 1500 V DC (IEC) - 1000 V (UL), from 80 to 550 A

Single pole

DBL80
7 connections

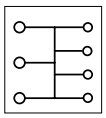

DBL125
8 connections

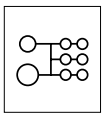

DBL160
8 connections

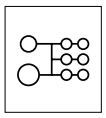

DBL175
12 connections

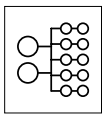

DBL250 and DBL400
12 connections

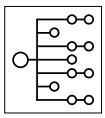

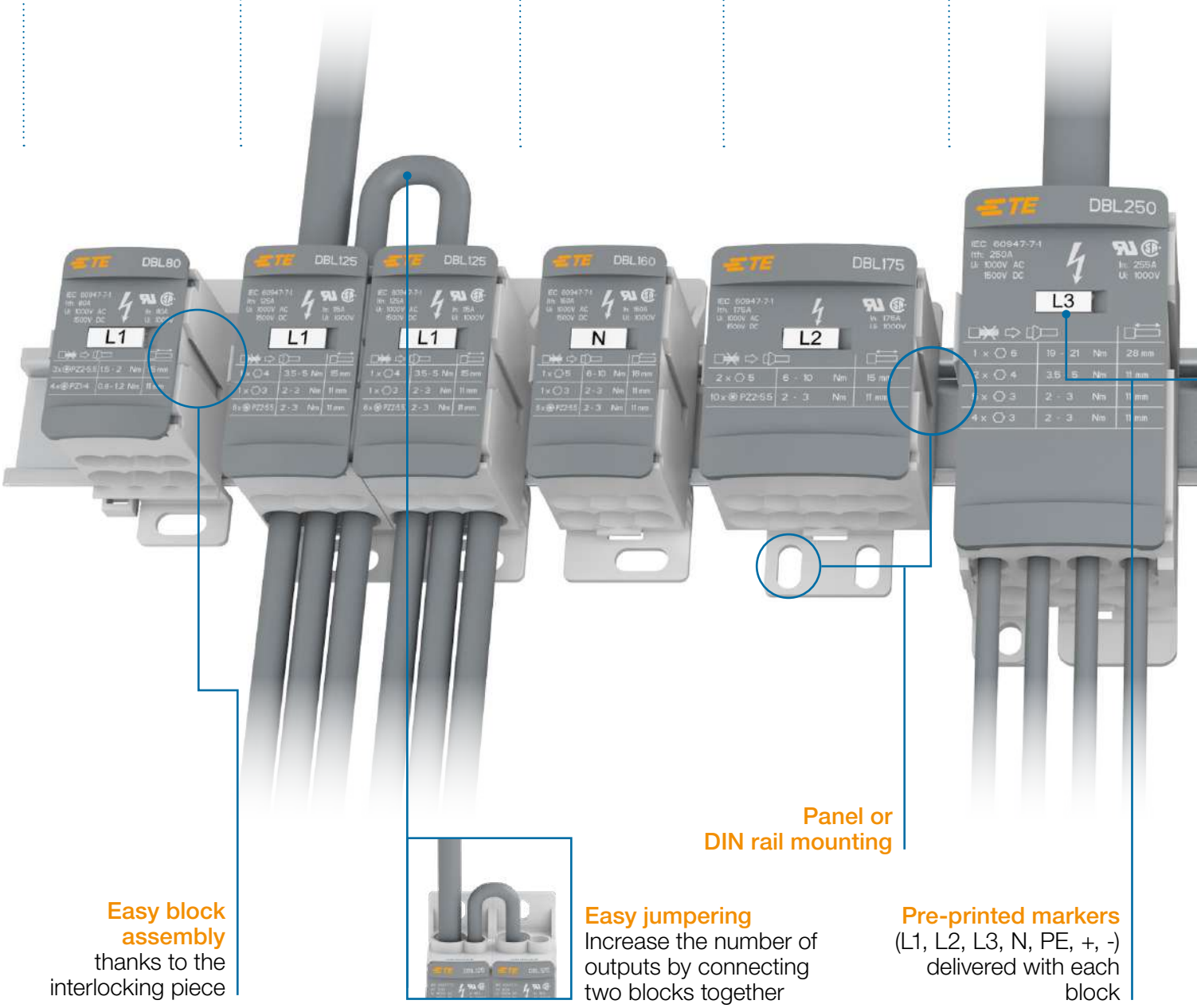

Easy block assembly
thanks to the interlocking piece

Easy jumpering
Increase the number of outputs by connecting two blocks together

Panel or DIN rail mounting

Pre-printed markers
(L1, L2, L3, N, PE, +, -) delivered with each block

Solar

DBL400-PV
14 connections

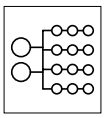

Three poles

DBL125-3 and
DBL175-C-3
8x3 connections

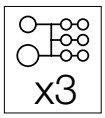

Flat conductor

DBL250-F and
DBL500-F
7 and 12 connections

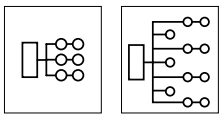

2 in/2 out

DBL500-22
4 connections

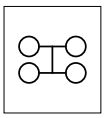

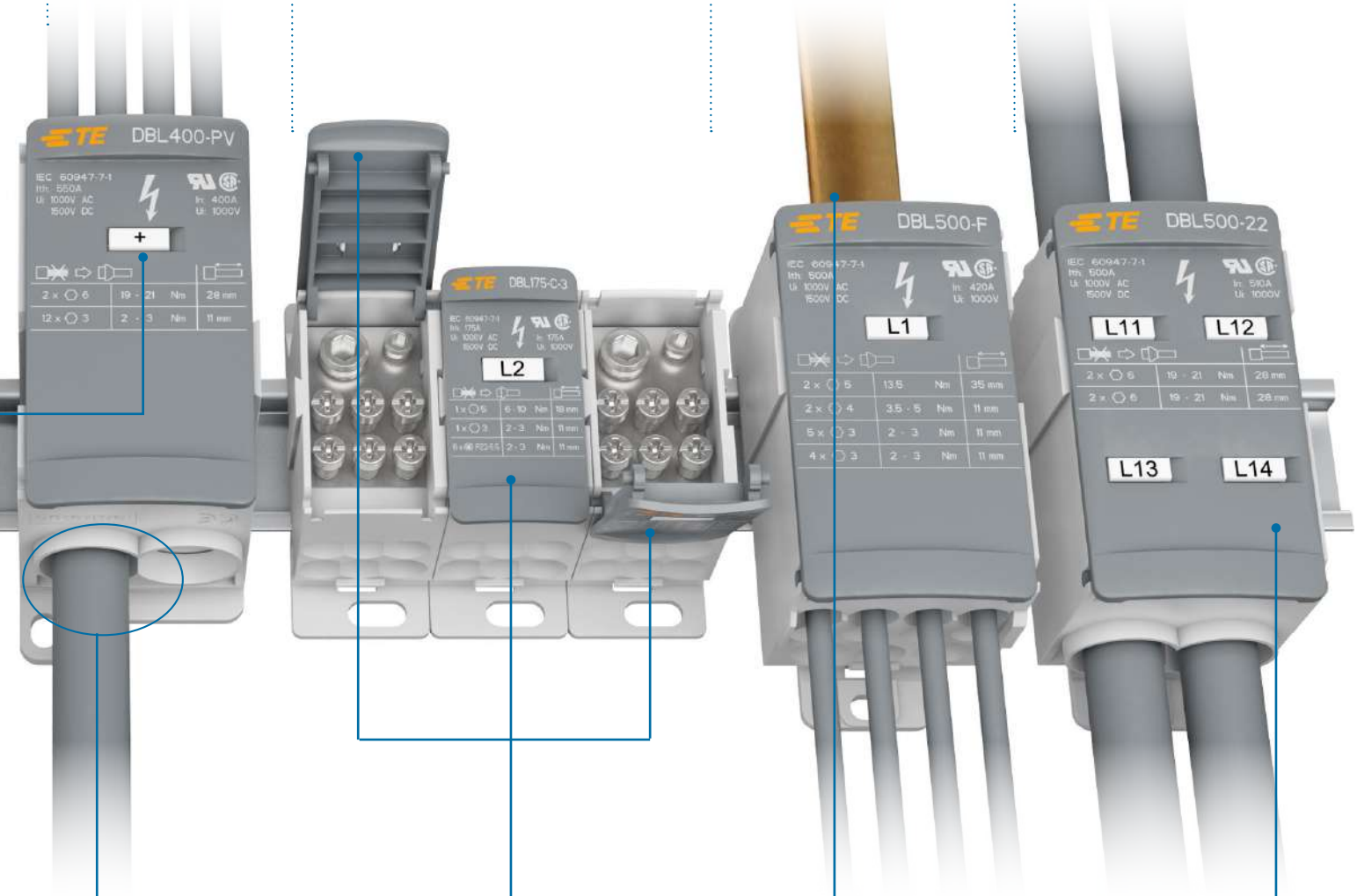

Combining of 12 photovoltaic strings
to collect solar energy up to 1500 V DC (IEC), 1000 V DC (UL)

Flexible cover for easy wiring:
- Two directions opening
- Removable & snap-on

Flat conductor feed-in

Main technical data printed on the cover and visible from top

1SNC166011S0201 - Rev. B

DBL power distribution blocks
Panorama

Input/ Output
Round conductors

Single pole

	Max current IEC	Max current UL	Cross section	Cross section	7	8	8	12	12	12
Number of connections					7	8	8	12	12	12
Cu	80 A	80 A	16 mm²	4 AWG	DBL80					
Al	63 A	-	16 mm²	-						
Cu	125 A	115 A	35 mm²	2 AWG		DBL125				
Al	100 A	-	35 mm²	-						
Cu	160 A	160 A	70 mm²	2/0 AWG			DBL160			
Al	135 A	-	70 mm²	-						
Cu	175 A	175 A	70 mm²	2/0 AWG				DBL175		
Al	135 A	-	70 mm²	-						
Cu	250 A	255 A	120 mm²	250 Kcmil					DBL250	
Al	200 A	-	120 mm²	-						
Cu	400 A	335 A	185 mm²	400 Kcmil						DBL400
Al	300 A	-	185 mm²	-						
Cu	500 A	510 A	95 mm²	250 Kcmil						
Cu	550 A	400 A	95 mm²	250 Kcmil						

Input:
Flat conductors
Output:
Round conductors

Flat conductors

	Max current IEC	Max current UL	Max cross section	7	12
Number of connections				7	12
Cu	250 A	250 A	15.5 x 7.5 mm	DBL250-F	
Cu	500 A	420 A	24 x 10 x 1 mm		DBL500-F

Three poles		2 in/2 out	Solar
8x3 X3	**8x3** X3	**4**	**14**
DBL125-3			
	DBL175-C-3		
		DBL500-22	
			DBL400-PV

1SNC166026S0201 - Rev. B

DBL80 power distribution blocks

Single pole - 28.4 mm 1.11 in spacing

1SNC166026V0014

DBL80

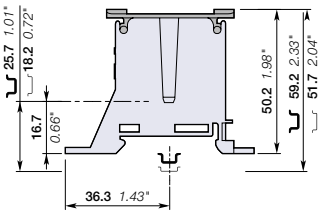

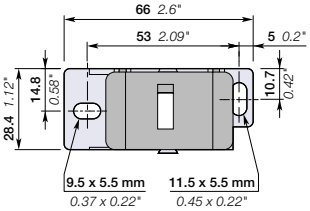

28.4 mm 1.11 in spacing

Mounting instructions

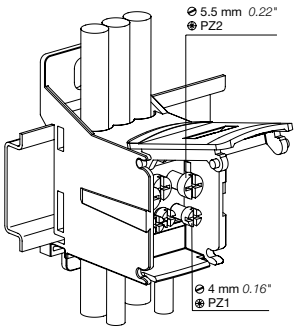

Description

- 3 configurations: distribute unipolar and multipolar power lines, or combine several inputs
- Mount it on Din rail or plate and save up to 50% rail space compared to conventional copper bars
- Reduce the assembly time by 80% by avoiding to use fastening and isolating components
- Increase the number of outputs by using the optional input and connecting two DBL together
- Easy identification with the reversible cover and delivered pre-printed markers L1, L2, L3, N, PE, +, –.

Ordering details

Description		Color	Type	Part Number		Pkg qty	Weight 1 pce g
Feed-through	Single pole distribution, 7 connections	Grey	DBL80	1SNL308010R0000		1	70

Main technical data

Connecting capacity		IEC	UL
Max current / Cross section	Copper	80 A / 16 mm²	80 A / 4 AWG
	Aluminium	63 A / 16 mm²	
Rated voltage		1000 V AC / 1500 V DC	1000 V
Rated impulse voltage		8 kV	
Short-time withstand current (Icw 1s)		1920 A	
Short Circuit Current Rating (SCCR)			100 kA
Rated peak withstand current (Ipk)		27 kA	
Protection		IP20	NEMA 1

The connecting capacity data for one Rigid: Solid/Stranded - Flexible conductor (when applicable) is a mandatory information required by IEC, UL and CSA standards (Copper conductors). All other data are provided as supplementary information only. For more details, please consult our CB, UL or CSA certificates and technical datasheet available on http://www.TE.com

CE CB RoHS USR CSA EAC BV

Mounting & wiring instructions

Rail: TH 35-7.5, TH 35-15

Connection Number		Size	Wire type		Wire stripping length	Tool	Torque
Input	3 x	Ø 6.6 mm Ø 0.26 in	2.5 ... 16 mm² 14 ... 6 AWG	2.5 ... 16 mm² 14 ... 4 AWG	15 mm 0.59 in	5.5 mm 0.22 in	1.5 ... 2 Nm 13.5 ... 18 lb.in
Output	4 x	Ø 4.5 mm Ø 0.18 in	2.5 ... 6 mm² 14 ... 10 AWG	2.5 ... 6 mm² 14 ... 10 AWG	11 mm 0.43 in	4 mm 0.16 in	0.8 ... 1.2 Nm 7.2 ... 10.8 lb.in

Not allowed			
Flexible without ferrule (IEC V-K & UL: class 5/6)	Flexible with insulated ferrule (IEC V-K & UL: class 5/6)	Rigid Solid (IEC V-U class 1, UL solid)	Rigid Stranded (IEC V-R class 2, UL class B/C)

Allen key Posidriv - flat screwdriver

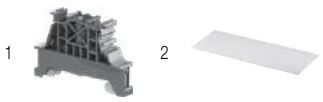

1 2

Accessories

	Description			Color	Type	Part Number		Pkg qty	Weight 1 pce g
1	End stops	10 mm	0.394 in	Dark grey	BAM4	1SNK900001R0000		50	14.00
		5.2 mm	0.205 in		BAZ1	1SNK900002R0000		50	5.30
		10 mm	0.394 in		BAZH1	1SNK900102R0000		20	24.00
2	Terminal block markers	Blank card		Green	MC512PA-GN	1SNK149997R0000		20	10.00
				Blue	MC512PA-BL	1SNK149998R0000		20	10.00
				White	MC512PA	1SNK149999R0000		20	10.00
		Pre-printed marker card (L1-L2-L3-N-PE)			MC512PA	1SNK149002R0000		1	10.00

Complete list of accessories is indicated in the terminal block datasheet including end stops. Some accessories such as jumper bars may modify the terminal block's ratings: Complete information available in the accessories section of the catalog.

1SNC166012S0201

DBL125 power distribution blocks
Single pole - 28.2 mm 1.11 in spacing

DBL125

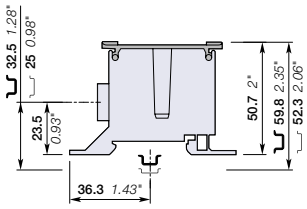

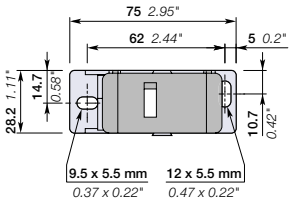

28.2 mm 1.11 in spacing

Mounting instructions

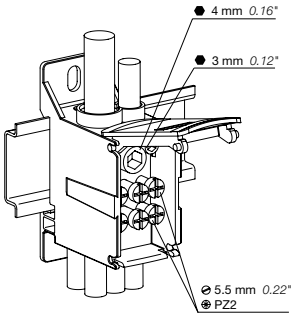

1SNC166027V0014

Description

- 3 configurations: distribute unipolar and multipolar power lines, or combine several inputs
- Mount it on Din rail or plate and save up to 50% rail space compared to conventional copper bars
- Reduce the assembly time by 80% by avoiding to use fastening and isolating components
- Increase the number of outputs by using the optional input and connecting two DBL together
- Easy identification with the reversible cover and delivered pre-printed markers L1, L2, L3, N, PE, +, –.

Ordering details

Description		Color	Type	Part Number		Pkg qty	Weight 1 pce g
Feed-through	Single pole distribution, 8 connections	Grey	DBL125	1SNL312510R0000		1	122

Main technical data

Connecting capacity		IEC	UL
Max current / Cross section	Copper	125 A / 35 mm²	115 A / 2 AWG
	Aluminium	100 A / 35 mm²	
Rated voltage		1000 V AC / 1500 V DC	1000 V
Rated impulse voltage		8 kV	
Short-time withstand current (Icw 1s)		4200 A	
Short Circuit Current Rating (SCCR)			100 kA
Rated peak withstand current (Ipk)		30 kA	
Protection		IP20	NEMA 1

The connecting capacity data for one Rigid: Solid/Stranded - Flexible conductor (when applicable) is a mandatory information required by IEC, UL and CSA standards (Copper conductors). All other data are provided as supplementary information only. For more details, please consult our CB, UL or CSA certificates and technical datasheet available on http://www.TE.com

CE CB RoHS USR CSA EAC BV

Mounting & wiring instructions

Rail: TH 35-7.5, TH 35-15

Connection Number		Size	Wire type		Wire stripping length	Tool	Torque
Input	1 x	Ø 9.8 mm Ø 0.39 in	10 ... 35 mm² 8 ... 2 AWG	10 ... 35 mm² 8 ... 2 AWG	15 mm 0.59 in	4 mm 0.16 in	3.5 ... 5 Nm 31 ... 44 lb.in
Output	1 x	Ø 6.8 mm Ø 0.27 in	2.5 ... 16 mm² 14 ... 6 AWG	6 ... 16 mm² 10 ... 6 AWG	11 mm 0.43 in	3 mm 0.12 in	2 ... 3 Nm 18 ... 26.5 lb.in
	6 x	Ø 6.4 mm Ø 0.25 in	2.5 ... 16 mm² 14 ... 6 AWG	2.5 ... 16 mm² 14 ... 6 AWG	11 mm 0.43 in	5.5 mm 0.22 in	2 ... 3 Nm 18 ... 26.5 lb.in

When using maximum cable size with insulated ferrules, use a maximum of 2 non-adjacent holes in each row.

Not allowed			
Flexible without ferrule (IEC V-K & UL: class 5/6)	Flexible with insulated ferrule (IEC V-K & UL: class 5/6)	Rigid Solid (IEC V-U class 1, UL solid)	Rigid stranded (IEC V-R class 2, UL class B/C)

Allen key Posidriv - flat screwdriver

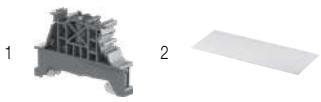

1 2

Accessories

	Description			Color	Type	Part Number		Pkg qty	Weight 1 pce g
1	End stops	10 mm	0.394 in	Dark grey	BAM4	1SNK900001R0000		50	14.00
		5.2 mm	0.205 in		BAZ1	1SNK900002R0000		50	5.30
		10 mm	0.394 in		BAZH1	1SNK900102R0000		20	24.00
2	Terminal block markers	Blank card		Green	MC512PA-GN	1SNK149997R0000		20	10.00
				Blue	MC512PA-BL	1SNK149998R0000		20	10.00
				White	MC512PA	1SNK149999R0000		20	10.00
		Pre-printed marker card (L1-L2-L3-N-PE)			MC512PA	1SNK149002R0000		1	10.00

Complete list of accessories is indicated in the terminal block datasheet including end stops. Some accessories such as jumper bars may modify the terminal block's ratings: Complete information available in the accessories section of the catalog.

1SNC166013S0201

DBL125-3 power distribution blocks

3x1 pole - 84.6 mm 3.33 in spacing

X3

DBL125-3

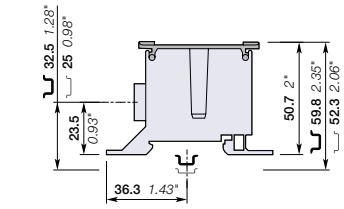

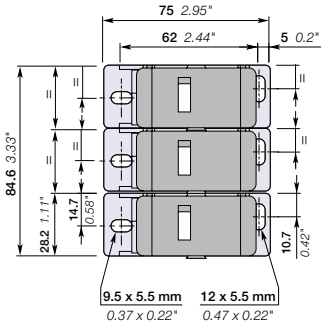

84.6 mm 3.33 in spacing

Mounting instructions

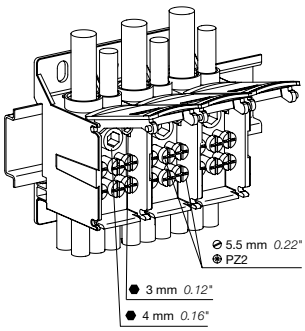

1 2

Description

- The usage of three poles distribution block is recommended for L1, L2, L3 applications
- Each pole can be separated from the assembly to align the poles with upstream equipment configuration
- Mount it on Din rail or plate and save up to 50% rail space compared to conventional copper bars
- Reduce the assembly time by 80% by avoiding to use fastening and isolating components
- Easy identification with the reversible cover and delivered pre-printed markers L1, L2, L3, N, PE, +, –.

Ordering details

Description		Color	Type	Part Number		Pkg qty	Weight 1 pce g
Feed-through	Three poles distribution block 3x8 connections	Grey	DBL125-3	1SNL312530R0000		1	367

Main technical data

Connecting capacity		IEC	UL
Max current / Cross section	Copper	125 A / 35 mm²	115 A / 2 AWG
	Aluminium	100 A / 35 mm²	
Rated voltage		1000 V AC / 1500 V DC	1000 V
Rated impulse voltage		8 kV	
Short-time withstand current (Icw 1s)		4200 A	
Short Circuit Current Rating (SCCR)			
Rated peak withstand current (Ipk)		30 kA	
Protection		IP20	NEMA 1

The connecting capacity data for one Rigid: Solid/Stranded - Flexible conductor (when applicable) is a mandatory information required by IEC, UL and CSA standards (Copper conductors). All other data are provided as supplementary information only. For more details, please consult our CB, UL or CSA certificates and technical datasheet available on http://www.TE.com

CE CB RoHS USR CSA EAC

Mounting & wiring instructions

Rail: TH 35-7.5, TH 35-15

Connection Number by pole		Size	Wire type		Wire stripping length	Tool	Torque
Input	1 x	Ø 9.8 mm Ø 0.39 in	10 ... 35 mm² 8 ... 2 AWG	10 ... 35 mm² 8 ... 2 AWG	15 mm 0.59 in	4 mm 0.16 in	3.5 ... 5 Nm 31 ... 44 lb.in
Output	1 x	Ø 6.8 mm Ø 0.27 in	2.5 ... 16 mm² 14 ... 6 AWG	6 ... 16 mm² 10 ... 6 AWG	11 mm 0.43 in	3 mm 0.12 in	2 ... 3 Nm 18 ... 26.5 lb.in
	6 x	Ø 6.4 mm Ø 0.25 in	2.5 ... 16 mm² 14 ... 6 AWG	2.5 ... 16 mm² 14 ... 6 AWG	11 mm 0.43 in	5.5 mm 0.22 in	2 ... 3 Nm 18 ... 26.5 lb.in

When using maximum cable size with insulated ferrules, use a maximum of 2 non-adjacent holes in each row.

Not allowed Flexible without ferrule (IEC V-K & UL: class 5/6)	Flexible with insulated ferrule (IEC V-K & UL: class 5/6)	Rigid Solid (IEC V-U class 1, UL solid)	Rigid stranded (IEC V-R class 2, UL class B/C)

Allen key Posidriv - flat screwdriver

Accessories

	Description			Color	Type	Part Number		Pkg qty	Weight 1 pce g
1	End stops	10 mm	0.394 in	Dark grey	BAM4	1SNK900001R0000		50	14.00
		5.2 mm	0.205 in		BAZ1	1SNK900002R0000		50	5.30
		10 mm	0.394 in		BAZH1	1SNK900102R0000		20	24.00
2	Terminal block markers	Blank card		Green	MC512PA-GN	1SNK149997R0000		20	10.00
				Blue	MC512PA-BL	1SNK149998R0000		20	10.00
				White	MC512PA	1SNK149999R0000		20	10.00
		Pre-printed marker card (L1-L2-L3-N-PE)			MC512PA	1SNK149002R0000		1	10.00

Complete list of accessories is indicated in the terminal block datasheet including end stops. Some accessories such as jumper bars may modify the terminal block's ratings: Complete information available in the accessories section of the catalog.

1SNC166020S0201

DBL160 power distribution blocks
Single pole - 28.2 mm 1.11 in spacing

DBL160

1SNC166028V0014

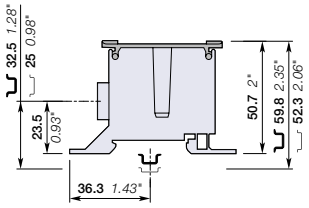

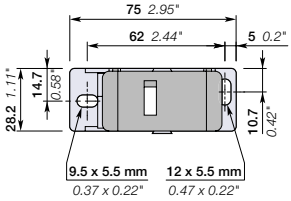

28.2 mm 1.11 in spacing

Mounting instructions

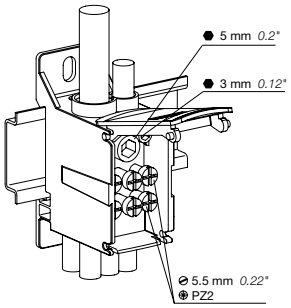

Description

- 3 configurations: distribute unipolar and multipolar power lines, or combine several inputs
- Mount it on Din rail or plate and save up to 50% rail space compared to conventional copper bars
- Reduce the assembly time by 80% by avoiding to use fastening and isolating components
- Increase the number of outputs by using the optional input and connecting two DBL together
- Easy identification with the reversible cover and delivered pre-printed markers L1, L2, L3, N, PE, +, –.

Ordering details

Description		Color	Type	Part Number		Pkg qty	Weight 1 pce g
Feed-through	Single pole distribution, 8 connections	Grey	DBL160	1SNL316010R0000		1	120

Main technical data

Connecting capacity		IEC	UL
Max current / Cross section	Copper	160 A / 70 mm²	160 A / 2/0 AWG
	Aluminium	135 A / 70 mm²	
Rated voltage		1000 V AC / 1500 V DC	1000 V
Rated impulse voltage		8 kV	
Short-time withstand current (Icw 1s)		6000 A	
Short Circuit Current Rating (SCCR)			100 kA
Rated peak withstand current (Ipk)		30 kA	
Protection		IP10	NEMA 1

The connecting capacity data for one Rigid: Solid/Stranded - Flexible conductor (when applicable) is a mandatory information required by IEC, UL and CSA standards (Copper conductors). All other data are provided as supplementary information only. For more details, please consult our CB, UL or CSA certificates and technical datasheet available on http://www.TE.com

CE CB RoHS USR CSA EAC BV

Mounting & wiring instructions

Rail: TH 35-7.5, TH 35-15

Connection Number		Size	Wire type		Wire stripping length	Tool	Torque
Input	1 x	Ø 11.8 mm Ø 0.46 in	16 ... 50 mm² 6 ... 1/0 AWG	16 ... 70 mm² 6 ... 2/0 AWG	18 mm 0.708 in	5 mm 0.20 in	6... 10 Nm 53 ... 88 lb.in
Output	1 x	Ø 6.8 mm Ø 0.27 in	2.5 ... 16 mm² 14 ... 6 AWG	6 ... 16 mm² 10 ... 6 AWG	11 mm 0.43 in	3 mm 0.12 in	2 ... 3 Nm 18 ... 26.5 lb.in
	6 x	Ø 6.4 mm Ø 0.25 in	2.5 ... 16 mm² 14 ... 6 AWG	2.5 ... 16 mm² 14 ... 6 AWG	11 mm 0.43 in	5.5 mm 0.22 in	2 ... 3 Nm 18 ... 26.5 lb.in

When using maximum cable size with insulated ferrules, use a maximum of 2 non-adjacent holes in each row.

Not allowed			
Flexible without ferrule (IEC V-K & UL: class 5/6)	Flexible with insulated ferrule (IEC V-K & UL: class 5/6)	Rigid Solid (IEC V-U class 1, UL solid)	Rigid stranded (IEC V-R class 2, UL class B/C)

Allen key Posidriv - flat screwdriver

1 2

Accessories

	Description			Color	Type	Part Number		Pkg qty	Weight 1 pce g
1	End stops	10 mm	0.394 in	Dark grey	BAM4	1SNK900001R0000		50	14.00
		5.2 mm	0.205 in		BAZ1	1SNK900002R0000		50	5.30
		10 mm	0.394 in		BAZH1	1SNK900102R0000		20	24.00
2	Terminal block markers	Blank card		Green	MC512PA-GN	1SNK149997R0000		20	10.00
				Blue	MC512PA-BL	1SNK149998R0000		20	10.00
				White	MC512PA	1SNK149999R0000		20	10.00
		Pre-printed marker card (L1-L2-L3-N-PE)			MC512PA	1SNK149002R0000		1	10.00

Complete list of accessories is indicated in the terminal block datasheet including end stops. Some accessories such as jumper bars may modify the terminal block's ratings: Complete information available in the accessories section of the catalog.

1SNC166014S0201

DBL175 power distribution blocks

Single pole - 46.2 mm 1.82 in spacing

1SNC166029V0014

DBL175

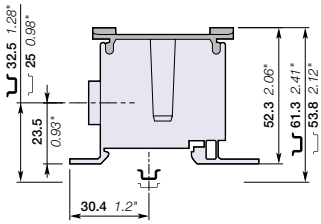

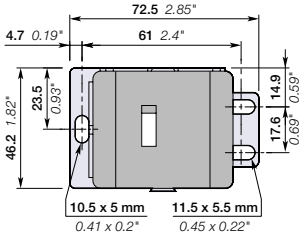

46.2 mm 1.81 in spacing

Mounting instructions

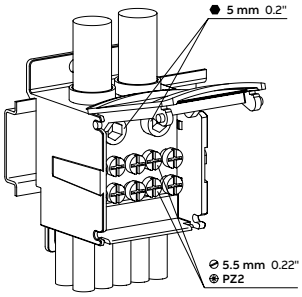

Description

- Reduce the assembly time by 80% by avoiding to use fastening and isolating components
- Mount it on Din rail or plate and save up to 50% rail space compared to conventional copper bars
- Increase the number of outputs by using the optional input and connecting two DBL together, or increase the current rating with two wires, 300 A with 50 mm² wires and 350 A with 2/0 AWG wires
- Easy identification with the reversible cover and delivered pre-printed markers L1, L2, L3, N, PE, +, –.

Ordering details

Description		Color	Type	Part Number		Pkg qty	Weight 1 pce g
Feed-through	Single pole distribution, 12 connections	Grey	DBL175	1SNL317510R0000		1	200

Main technical data

Connecting capacity		IEC	UL
Max current / Cross section	Copper	175 A / 70 mm²	175 A / 2/0 AWG
	Aluminium	135 A / 70 mm²	
Rated voltage		1000 V AC / 1500 V DC	1000 V
Rated impulse voltage		8 kV	
Short-time withstand current (Icw 1s)		6000 A	
Short Circuit Current Rating (SCCR)			100 kA
Rated peak withstand current (Ipk)		30 kA	
Protection		IP10	NEMA 1

The connecting capacity data for one Rigid: Solid/Stranded - Flexible conductor (when applicable) is a mandatory information required by IEC, UL and CSA standards (Copper conductors). All other data are provided as supplementary information only. For more details, please consult our CB, UL or CSA certificates and technical datasheet available on http://www.TE.com

CE CB RoHS USR CSA EAC BV

Mounting & wiring instructions

Rail: TH 35-7.5, TH 35-15

Connection Number		Size	Wire type		Wire stripping length	Tool	Torque
Input	2 x	Ø 11.8 mm Ø 0.46 in	10 ... 50 mm² 8 ... 1/0 AWG	10 ... 70 mm² 6 ... 2/0 AWG	15 mm 0.708 in	5 mm 0.20 in	6... 10 Nm 53 ... 88 lb.in
Output	10 x	Ø 6.4 mm Ø 0.25 in	2.5 ... 16 mm² 14 ... 6 AWG	2.5 ... 16 mm² 14 ... 6 AWG	11 mm 0.43 in	5.5 mm 0.22 in	2 ... 3 Nm 18 ... 26.5 lb.in

When using maximum cable size with insulated ferrules, use a maximum of 3 non-adjacent holes in each row.

Not allowed Flexible without ferrule (IEC V-K & UL: class 5/6)	Flexible with insulated ferrule (IEC V-K & UL: class 5/6)	Rigid Solid (IEC V-U class 1, UL solid)	Rigid stranded (IEC V-R class 2, UL class B/C)

Allen key Posidriv - flat screwdriver

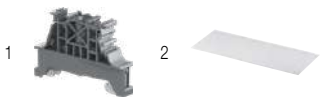

1 2

Accessories

	Description			Color	Type	Part Number		Pkg qty	Weight 1 pce g
1	End stops	10 mm	0.394 in	Dark grey	BAM4	1SNK900001R0000		50	14.00
		5.2 mm	0.205 in		BAZ1	1SNK900002R0000		50	5.30
		10 mm	0.394 in		BAZH1	1SNK900102R0000		20	24.00
2	Terminal block markers	Blank card		Green	MC512PA-GN	1SNK149997R0000		20	10.00
				Blue	MC512PA-BL	1SNK149998R0000		20	10.00
				White	MC512PA	1SNK149999R0000		20	10.00
		Pre-printed marker card (L1-L2-L3-N-PE)			MC512PA	1SNK149002R0000		1	10.00

Complete list of accessories is indicated in the terminal block datasheet including end stops. Some accessories such as jumper bars may modify the terminal block's ratings: Complete information available in the accessories section of the catalog.

1SNC166015S0201

DBL175-C-3 power distribution blocks

3x1 pole - 84.6 mm 3.33 in spacing

X3

DBL175-C-3

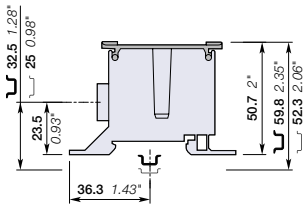

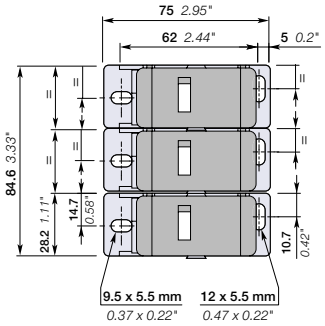

84.6 mm 3.33 in spacing

Mounting instructions

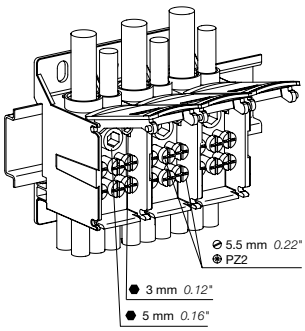

1 2

Description

- The usage of three poles distribution block is recommended for L1, L2, L3 applications
- Each pole can be separated from the assembly to align the poles with upstream equipment configuration
- Mount it on Din rail or plate and save up to 50% rail space compared to conventional copper bars
- Reduce the assembly time by 80% by avoiding to use fastening and isolating components
- Easy identification with the reversible cover and delivered pre-printed markers L1, L2, L3, N, PE, +, –.

Ordering details

Description		Color	Type	Part Number		Pkg qty	Weight 1 pce g
Feed-through	Three poles distribution block 3x8 connections	Grey	DBL175-C-3	1SNL317531R0000		1	360

Main technical data

Connecting capacity		IEC	UL
Max current / Cross section	Copper	175 A / 70 mm²	175 A / 2/0 AWG
	Aluminium	135 A / 70 mm²	
Rated voltage		1000 V AC / 1500 V DC	1000 V
Rated impulse voltage		8 kV	
Short-time withstand current (Icw 1s)		6000 A	
Short Circuit Current Rating (SCCR)			
Rated peak withstand current (Ipk)		30 kA	
Protection		IP10	NEMA 1

The connecting capacity data for one Rigid: Solid/Stranded - Flexible conductor (when applicable) is a mandatory information required by IEC, UL and CSA standards (Copper conductors). All other data are provided as supplementary information only. For more details, please consult our CB, UL or CSA certificates and technical datasheet available on http://www.TE.com

CE CB RoHS USR CSA EAC

Mounting & wiring instructions

Rail: TH 35-7.5, TH 35-15

Connection Number by pole		Size	Wire type		Wire stripping length	Tool	Torque
Input	1 x	Ø 11.8 mm Ø 0.46 in	16 ... 50 mm² 8 ... 1/0 AWG	16 ... 70 mm² 6 ... 2/0 AWG	18 mm 0.708 in	5 mm 0.20 in	6... 10 Nm 53 ... 88 lb.in
Output	1 x	Ø 6.8 mm Ø 0.27 in	2.5 ... 16 mm² 14 ... 6 AWG	6 ... 16 mm² 10 ... 6 AWG	11 mm 0.43 in	3 mm 0.12 in	2 ... 3 Nm 18 ... 26.5 lb.in
	6 x	Ø 6.4 mm Ø 0.25 in	2.5 ... 16 mm² 14 ... 6 AWG	2.5 ... 16 mm² 14 ... 6 AWG	11 mm 0.43 in	5.5 mm 0.22 in	2 ... 3 Nm 18 ... 26.5 lb.in

When using maximum cable size with insulated ferrules, use a maximum of 2 non-adjacent holes in each row.

Not allowed			
Flexible without ferrule (IEC V-K & UL: class 5/6)	Flexible with insulated ferrule (IEC V-K & UL: class 5/6)	Rigid Solid (IEC V-U class 1, UL solid)	Rigid stranded (IEC V-R class 2, UL class B/C)

Allen key Posidriv - flat screwdriver

Accessories

	Description			Color	Type	Part Number		Pkg qty	Weight 1 pce g
1	End stops	10 mm	0.394 in	Dark grey	BAM4	1SNK900001R0000		50	14.00
		5.2 mm	0.205 in		BAZ1	1SNK900002R0000		50	5.30
		10 mm	0.394 in		BAZH1	1SNK900102R0000		20	24.00
2	Terminal block markers	Blank card		Green	MC512PA-GN	1SNK149997R0000		20	10.00
				Blue	MC512PA-BL	1SNK149998R0000		20	10.00
				White	MC512PA	1SNK149999R0000		20	10.00
		Pre-printed marker card (L1-L2-L3-N-PE)			MC512PA	1SNK149002R0000		1	10.00

Complete list of accessories is indicated in the terminal block datasheet including end stops. Some accessories such as jumper bars may modify the terminal block's ratings: Complete information available in the accessories section of the catalog.

1SNC16602 1S0201

DBL250 power distribution blocks

Single pole - 46 mm 1.81 in spacing

1SNC166030V0014

DBL250

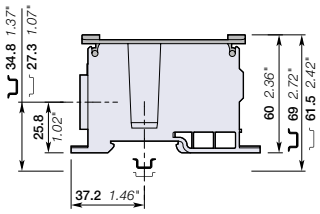

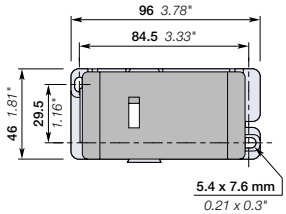

46 mm 1.81 in spacing

Mounting instructions

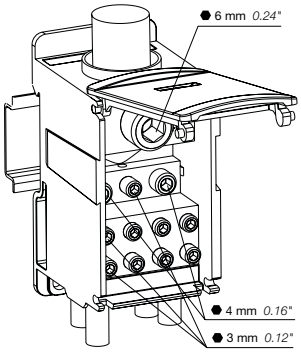

Description

- 3 configurations: distribute unipolar and multipolar power lines, or combine several inputs
- Mount it on Din rail or plate and save up to 50% rail space compared to conventional copper bars
- Reduce the assembly time by 80% by avoiding to use fastening and isolating components
- Easy identification with the reversible cover and delivered pre-printed markers L1, L2, L3, N, PE, +, –.

Ordering details

Description		Color	Type	Part Number		Pkg qty	Weight 1 pce g
Feed-through	Single pole distribution, 12 connections	Grey	DBL250	1SNL325010R0000		1	439

Main technical data

Connecting capacity		IEC	UL
Max current / Cross section	Copper	250 A / 120 mm²	255 A / 250 Kcmil
	Aluminium	200 A / 120 mm²	
Rated voltage		1000 V AC / 1500 V DC	1000 V
Rated impulse voltage		8 kV	
Short-time withstand current (Icw 1s)		11400 A	
Short Circuit Current Rating (SCCR)			100 kA
Rated peak withstand current (Ipk)		51 kA	
Protection		IP10	NEMA 1

The connecting capacity data for one Rigid: Solid/Stranded - Flexible conductor (when applicable) is a mandatory information required by IEC, UL and CSA standards (Copper conductors). All other data are provided as supplementary information only. For more details, please consult our CB, UL or CSA certificates and technical datasheet available on http://www.TE.com

CE CB RoHS USR CSA EAC EV

Mounting & wiring instructions

Rail: TH 35-7.5, TH 35-15

Connection Number		Size	Wire type		Wire stripping length	Tool	Torque
Input	1 x	Ø 15.3 mm Ø 0.60 in	35 ... 95 mm² 2 ... 3/0 AWG	35 ... 120 mm² 2 ... 250 Kcmil	28 mm 1.10 in	6 mm 0.24 in	19 ... 21 Nm 168 ... 185 lb.in
Output	2 x	Ø 8.7 mm Ø 0.34 in	2.5 ... 25 mm² 14 ... 4 AWG	2.5 ... 35 mm² 14 ... 2 AWG	11 mm 0.43 in	4 mm 0.16 in	3.5 ... 5 Nm 31 ... 44 lb.in
	5 x	Ø 6.4 mm Ø 0.25 in	2.5 ... 16 mm² 14 ... 6 AWG	2.5 ... 16 mm² 14 ... 6 AWG	11 mm 0.43 in	3 mm 0.12 in	2 ... 3 Nm 18 ... 26.5 lb.in
	4 x	Ø 5.7 mm Ø 0.22 in	2.5 ... 10 mm² 14 ... 8 AWG	2.5 ... 10 mm² 14 ... 8 AWG	11 mm 0.43 in	3 mm 0.12 in	2 ... 3 Nm 18 ... 26.5 lb.in

Not allowed Flexible without ferrule (IEC V-K & UL: class 5/6)	Flexible with insulated ferrule (IEC V-K & UL: class 5/6)	Rigid Solid (IEC V-U class 1, UL solid)	Rigid stranded (IEC V-R class 2, UL class B/C)

Allen key Posidriv - flat screwdriver

Accessories

1

2

	Description			Color	Type	Part Number		Pkg qty	Weight 1 pce g
1	End stops	10 mm	0.394 in	Dark grey	BAM4	1SNK900001R0000		50	14.00
		5.2 mm	0.205 in		BAZ1	1SNK900002R0000		50	5.30
		10 mm	0.394 in		BAZH1	1SNK900102R0000		20	24.00
2	Terminal block markers	Blank card		Green	MC512PA-GN	1SNK149997R0000		20	10.00
				Blue	MC512PA-BL	1SNK149998R0000		20	10.00
				White	MC512PA	1SNK149999R0000		20	10.00
		Pre-printed marker card (L1-L2-L3-N-PE)			MC512PA	1SNK149002R0000		1	10.00

Complete list of accessories is indicated in the terminal block datasheet including end stops. Some accessories such as jumper bars may modify the terminal block's ratings: Complete information available in the accessories section of the catalog.

1SNC166016S0201

DBL250-F power distribution blocks

Single pole - Flat entry - 29 mm 1.14 in spacing

1SNC166052V0014

DBL250-F

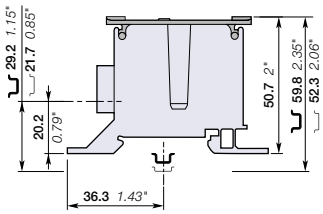

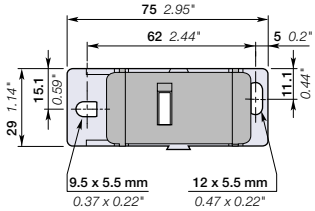

29 mm 1.14 in spacing

Mounting instructions

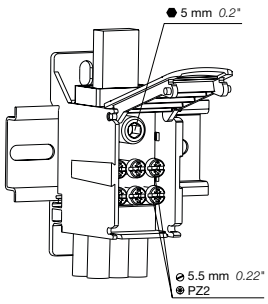

Description

- Suitable for distributing power from flat conductors: flexible or solid bars
- Mount it on Din rail or plate and save up to 50% rail space compared to conventional copper bars
- Reduce the assembly time by 80% by avoiding to use fastening and isolating components
- Easy identification with the reversible cover and delivered pre-printed markers L1, L2, L3, N, PE, +, –.

Ordering details

Description		Color	Type	Part Number		Pkg qty	Weight 1 pce g
Feed-through	Single pole distribution - Flat entry, 7 connections	Grey	DBL250-F	1SNL325060R0000		1	119

Main technical data

Connecting capacity		IEC	UL
Max current / Cross section	Flexible busbar	250 A / 6 x 15.5 x 0.8 mm	250 A / 6 x 15.5 x 0.8 mm
	Solid busbar	208 A / 12 x 4 mm	160 A / 12 x 4 mm
Rated voltage		1000 V AC / 1500 V DC	1000 V
Rated impulse voltage		8 kV	
Short-time withstand current (Icw 1s)		11400 A	
Short Circuit Current Rating (SCCR)			100 kA
Rated peak withstand current (Ipk)		22.8 kA	
Protection		IP20	NEMA 1

The connecting capacity data for one Rigid: Solid/Stranded - Flexible conductor (when applicable) is a mandatory information required by IEC, UL and CSA standards (Copper conductors). All other data are provided as supplementary information only. For more details, please consult our CB, UL or CSA certificates and technical datasheet available on http://www.TE.com

CE RoHS USR CSA EAC EV

Mounting & wiring instructions

Rail: TH 35-7.5, TH 35-15

Connection Number		Size	Wire type		Wire stripping length	Tool	Torque
Input	1 x	15.5 x 7.5 mm 0.59 x 0.28 in	12 x 4 mm	3 x 9 x 0.8 mm ... ... 6 x 15.5 x 0.8 mm	15 mm 0.59 in	5 mm 0.20 in	13.5 Nm 120 lb.in
Output	6 x	Ø 6.6 mm Ø 0.26 in	2.5 ... 16 mm² 14 ... 6 AWG	2.5 ... 16 mm² 14 ... 6 AWG	11 mm 0.43 in	5.5 mm 0.22 in	2 ... 3 Nm 18 ... 26.5 lb.in

When using maximum cable size with insulated ferrules, use a maximum of 2 non-adjacent holes in each row.

Not allowed					
Flexible without ferrule (IEC V-K & UL: class 5/6)	Flexible with insulated ferrule (IEC V-K & UL: class 5/6)	Rigid Solid (IEC V-U class 1, UL solid)	Rigid stranded (IEC V-R class 2, UL class B/C)	Solid busbar	Flexible busbar

Allen key Posidriv - flat screwdriver

Accessories

1

2

	Description			Color	Type	Part Number		Pkg qty	Weight 1 pce g
1	End stops	10 mm	0.394 in	Dark grey	BAM4	1SNK900001R0000		50	14.00
		5.2 mm	0.205 in		BAZ1	1SNK900002R0000		50	5.30
		10 mm	0.394 in		BAZH1	1SNK900102R0000		20	24.00
2	Terminal block markers	Blank card		Green	MC512PA-GN	1SNK149997R0000		20	10.00
				Blue	MC512PA-BL	1SNK149998R0000		20	10.00
				White	MC512PA	1SNK149999R0000		20	10.00
		Pre-printed marker card (L1-L2-L3-N-PE)			MC512PA	1SNK149002R0000		1	10.00

Complete list of accessories is indicated in the terminal block datasheet including end stops. Some accessories such as jumper bars may modify the terminal block's ratings: Complete information available in the accessories section of the catalog.

1SNC166022S0201

DBL400 power distribution blocks

Single pole - 46 mm 1.81 in spacing

1SNC166031W0014

DBL400

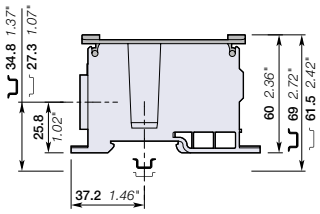

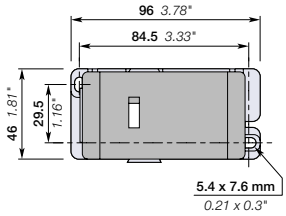

46 mm 1.81 in spacing

Mounting instructions

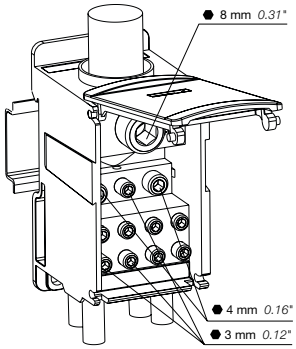

Description

- 3 configurations: distribute unipolar and multipolar power lines, or combine several inputs
- Mount it on Din rail or plate and save up to 50% rail space compared to conventional copper bars
- Reduce the assembly time by 80% by avoiding to use fastening and isolating components
- Easy identification with the reversible cover and delivered pre-printed markers L1, L2, L3, N, PE, +, –.

Ordering details

Description		Color	Type	Part Number		Pkg qty	Weight 1 pce g
Feed-through	Single pole distribution, 12 connections	Grey	DBL400	1SNL340010R0000		1	425

Main technical data

Connecting capacity		IEC	UL
Max current / Cross section	Copper	400 A / 185 mm²	335 A / 400 Kcmil
	Aluminium	300 A / 185 mm²	
Rated voltage		1000 V AC / 1500 V DC	1000 V
Rated impulse voltage		8 kV	
Short-time withstand current (Icw 1s)		18000 A	
Short Circuit Current Rating (SCCR)			100 kA
Rated peak withstand current (Ipk)		51 kA	
Protection		IP10	NEMA 1

The connecting capacity data for one Rigid: Solid/Stranded - Flexible conductor (when applicable) is a mandatory information required by IEC, UL and CSA standards (Copper conductors). All other data are provided as supplementary information only. For more details, please consult our CB, UL or CSA certificates and technical datasheet available on http://www.TE.com

CE CB RoHS USR CSA EAC EV

Mounting & wiring instructions

Rail: TH 35-7.5, TH 35-15

Connection Number		Size	Wire type		Wire stripping length	Tool	Torque
Input	1 x	Ø 18.8 mm Ø 0.74 in	95 ... 150 mm² 3/0 ... 300 Kcmil	95 ... 185 mm² 3/0 ... 400 Kcmil	28 mm 1.10 in	8 mm 0.31 in	25 Nm 221 lb.in
Output	2 x	Ø 8.7 mm Ø 0.34 in	2.5 ... 25 mm² 14 ... 4 AWG	2.5 ... 35 mm² 14 ... 2 AWG	11 mm 0.43 in	4 mm 0.16 in	3.5 ... 5 Nm 31 ... 44 lb.in
	5 x	Ø 6.4 mm Ø 0.25 in	2.5 ... 16 mm² 14 ... 6 AWG	2.5 ... 16 mm² 14 ... 6 AWG	11 mm 0.43 in	3 mm 0.12 in	2 ... 3 Nm 18 ... 26.5 lb.in
	4 x	Ø 5.7 mm Ø 0.22 in	2.5 ... 10 mm² 14 ... 8 AWG	2.5 ... 10 mm² 14 ... 8 AWG	11 mm 0.43 in	3 mm 0.12 in	2 ... 3 Nm 18 ... 26.5 lb.in

Not allowed Flexible without ferrule (IEC V-K & UL: class 5/6)	Flexible with insulated ferrule (IEC V-K & UL: class 5/6)	Rigid Solid (IEC V-U class 1, UL solid)	Rigid stranded (IEC V-R class 2, UL class B/C)

Allen key Posidriv - flat screwdriver

1 2

Accessories

	Description			Color	Type	Part Number		Pkg qty	Weight 1 pce g
1	End stops	10 mm	0.394 in	Dark grey	BAM4	1SNK900001R0000		50	14.00
		5.2 mm	0.205 in		BAZ1	1SNK900002R0000		50	5.30
		10 mm	0.394 in		BAZH1	1SNK900102R0000		20	24.00
2	Terminal block markers	Blank card		Green	MC512PA-GN	1SNK149997R0000		20	10.00
				Blue	MC512PA-BL	1SNK149998R0000		20	10.00
				White	MC512PA	1SNK149999R0000		20	10.00
		Pre-printed marker card (L1-L2-L3-N-PE)			MC512PA	1SNK149002R0000		1	10.00

Complete list of accessories is indicated in the terminal block datasheet including end stops. Some accessories such as jumper bars may modify the terminal block's ratings: Complete information available in the accessories section of the catalog.

1SNC166017S0201

DBL400-PV power distribution blocks
Single pole - 46 mm 1.81 in spacing

1SNC166053V0014

DBL400-PV

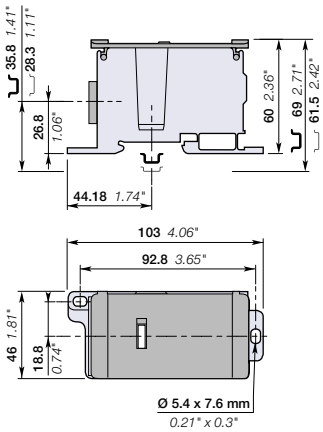

46 mm 1.81 in spacing

Mounting instructions

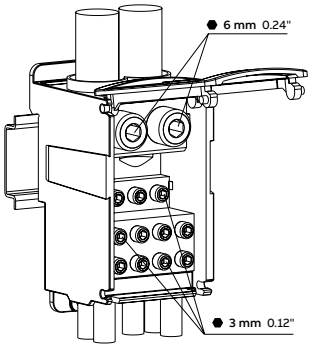

Description

- Suitable for solar application with the possibility to combine 12 photovoltaic strings
- Mount it on Din rail or plate and save up to 50% rail space compared to conventional copper bars
- Reduce the assembly time by 80% by avoiding to use fastening and isolating components
- Increase the number of outputs by using the optional input and connecting two DBL together
- Easy identification with the reversible cover and delivered pre-printed markers L1, L2, L3, N, PE, +, –.

Ordering details

Description		Color	Type	Part Number		Pkg qty	Weight 1 pce g
Feed-through	Single pole distribution, 14 connections	Grey	DBL400-PV	1SNL340011R0000		1	202

Main technical data

Connecting capacity		IEC	UL
Max current / Cross section	Copper	550 A / (2x) 95 mm²	400 A / (2x) 250 Kcmil
Rated voltage		1000 V AC / 1500 V DC	1000 V
Rated impulse voltage		8 kV	
Short-time withstand current (Icw 1s)		22800 A	
Short Circuit Current Rating (SCCR)			100 kA
Rated peak withstand current (Ipk)		47.88 kA	
Protection		IP10	NEMA 1

The connecting capacity data for one Rigid: Solid/Stranded - Flexible conductor (when applicable) is a mandatory information required by IEC, UL and CSA standards (Copper conductors). All other data are provided as supplementary information only. For more details, please consult our CB, UL or CSA certificates and technical datasheet available on http://www.TE.com

CE CB RoHS USR CSA EAC BV

Mounting & wiring instructions

Rail: TH 35-7.5, TH 35-15

Connection Number		Size	Wire type		Wire stripping length	Tool	Torque
Input	2 x	Ø 15,5 mm Ø 0.59 in	25 ... 95 mm² 4 ... 3/0 AWG	25 ... 120 mm² 4 ... 250 Kcmil	28 mm 1.1 in	6 mm 0.24 in	19 ... 21 Nm 168 ... 185 lb.in
Output	12 x	Ø 6.6 mm Ø 0.26 in	2.5 ... 16 mm² 14 ... 6 AWG	2.5 ... 16 mm² 14 ... 6 AWG	11 mm 0.43 in	3 mm 0.19 in	2 ... 3 Nm 18 ... 26.5 lb.in

Not allowed			
Flexible without ferrule (IEC V-K & UL: class 5/6)	Flexible with insulated ferrule (IEC V-K & UL: class 5/6)	Rigid Solid (IEC V-U class 1, UL solid)	Rigid stranded (IEC V-R class 2, UL class B/C)

Allen key Posidriv - flat screwdriver

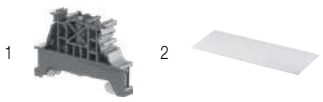

Accessories

	Description			Color	Type	Part Number		Pkg qty	Weight 1 pce g
1	End stops	10 mm	0.394 in	Dark grey	BAM4	1SNK900001R0000		50	14.00
		5.2 mm	0.205 in		BAZ1	1SNK900002R0000		50	5.30
		10 mm	0.394 in		BAZH1	1SNK900102R0000		20	24.00
2	Terminal block markers	Blank card		Green	MC512PA-GN	1SNK149997R0000		20	10.00
				Blue	MC512PA-BL	1SNK149998R0000		20	10.00
				White	MC512PA	1SNK149999R0000		20	10.00
		Pre-printed marker card (L1-L2-L3-N-PE)			MC512PA	1SNK149002R0000		1	10.00

Complete list of accessories is indicated in the terminal block datasheet including end stops. Some accessories such as jumper bars may modify the terminal block's ratings: Complete information available in the accessories section of the catalog.

1SNC166024S0201

DBL500-22 Power Distribution Blocks

Single pole - 46 mm 1.81 in spacing

DBL500-22

1SNC166054V0014

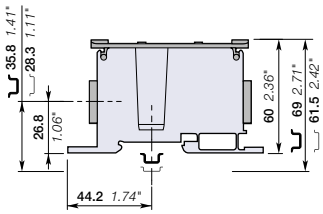

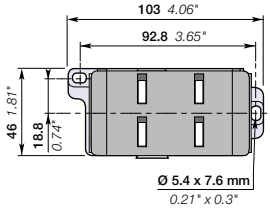

46 mm 1.81 in spacing

Mounting instructions

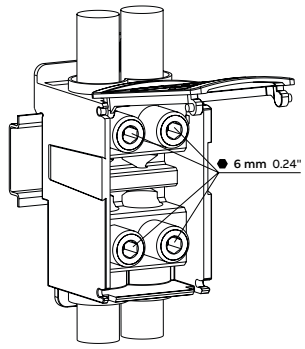

Description

- Suitable for distributing or connecting main power lines with 2 inputs and 2 outputs
- Mount it on Din rail or plate and save up to 50% rail space compared to conventional copper bars
- Reduce the assembly time by 80% by avoiding to use fastening and isolating components
- Increase the number of outputs by using the second input and connecting two DBL together
- Easy identification with the reversible cover and delivered pre-printed markers L1, L2, L3, N, PE, +, –.

Ordering details

Description		Color	Type	Part Number		Pkg qty	Weight 1 pce g
Feed-through	Single pole distribution, 4 connections	Grey	DBL500-22	1SNL850001R0000		1	224

Main technical data

Connecting capacity		IEC	UL
Max current / Cross section	Copper	500 A / (2x) 95 mm²	510 A / (2x) 250 Kcmil
Rated voltage		1000 V AC / 1500 V DC	1000 V
Rated impulse voltage		8 kV	
Short-time withstand current (Icw 1s)		22800 A	
Short Circuit Current Rating (SCCR)			100 kA
Rated peak withstand current (Ipk)		47.88 kA	
Protection		IP10	NEMA 1

The connecting capacity data for one Rigid: Solid/Stranded - Flexible conductor (when applicable) is a mandatory information required by IEC, UL and CSA standards (Copper conductors). All other data are provided as supplementary information only. For more details, please consult our CB, UL or CSA certificates and technical datasheet available on http://www.TE.com

CE CB RoHS USR CSA EAC BV

Mounting & wiring instructions

Rail: TH 35-7.5, TH 35-15

Connection Number		Size	Wire type		Wire stripping length	Tool	Torque
Input	2 x	Ø 15.5 mm Ø 0.61 in	25 ... 95 mm² 4 ... 3/0 AWG	25 ... 120 mm² 4 ... 250 Kcmil	28 mm 1.1 in	6 mm 0.24 in	19 ... 21 Nm 168 ... 185 lb.in
Output	2 x	Ø 15.5 mm Ø 0.61 in	25 ... 95 mm² 4 ... 3/0 AWG	25 ... 120 mm² 4 ... 250 Kcmil	28 mm 1.1 in	6 mm 0.24 in	19 ... 21 Nm 168 ... 185 lb.in

Not allowed			
Flexible without ferrule (IEC V-K & UL: class 5/6)	Flexible with insulated ferrule (IEC V-K & UL: class 5/6)	Rigid Solid (IEC V-U class 1, UL solid)	Rigid stranded (IEC V-R class 2, UL class B/C)

Allen key Posidriv - flat screwdriver

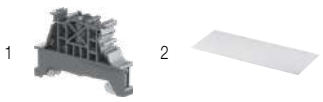

1 2

Accessories

	Description			Color	Type	Part Number		Pkg qty	Weight 1 pce g
1	End Stops	10 mm	0.394 in	Dark Grey	BAM4	1SNK900001R0000		50	14.00
		5.2 mm	0.205 in		BAZ1	1SNK900002R0000		50	5.30
		10 mm	0.394 in		BAZH1	1SNK900102R0000		20	24.00
2	Terminal Block Markers	Blank card		Green	MC512PA-GN	1SNK149997R0000		20	10.00
				Blue	MC512PA-BL	1SNK149998R0000		20	10.00
				White	MC512PA	1SNK149999R0000		20	10.00
		Pre-printed marker card (L1-L2-L3-N-PE)			MC512PA	1SNK149002R0000		1	10.00

Complete list of accessories is indicated in the terminal block datasheet including end stops. Some accessories such as jumper bars may modify the terminal block's ratings: Complete information available in the accessories section of the catalog.

1SNC166025S0201

DBL500-F power distribution blocks

Single pole - Flat entry - 46 mm 1.81 in spacing

1SNC166051W0014

DBL500-F

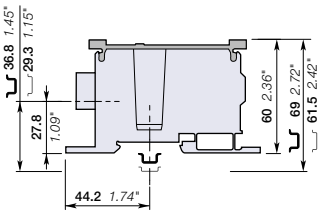

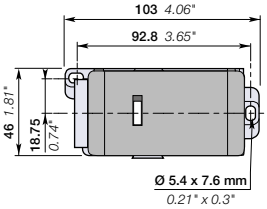

46 mm 1.81 in spacing

Mounting instructions

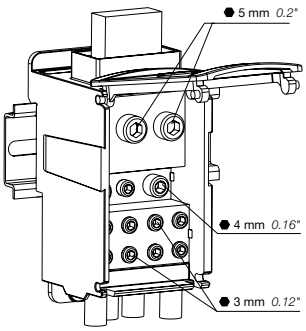

Description

- Suitable for distributing power from flat conductors: 500A (IEC), 420A (UL)
- Mount it on Din rail or plate and save up to 50% rail space compared to conventional copper bars
- Reduce the assembly time by 80% by avoiding to use fastening and isolating components
- Easy identification with the reversible cover and delivered pre-printed markers L1, L2, L3, N, PE, +, –.

Ordering details

Description		Color	Type	Part Number		Pkg qty	Weight 1 pce g
Feed-through	Single pole distribution - Flat entry, 12 connections	Grey	DBL500-F	1SNL350060R0000		1	514

Main technical data

Connecting capacity		IEC	UL
Max current / Max cross section	Flexible busbar	500 A / 10 x 24 x 1 mm	420 A / 10 x 24 x 1 mm
	Solid busbar	500 A / 25 x 5 mm (x2)	420 A / 25 x 5 mm (x2)
Rated voltage		1000 V AC / 1500 V DC	1000 V
Rated impulse voltage			
Short-time withstand current (Icw 1s)		28800 A	
Short Circuit Current Rating (SCCR)			100 kA
Rated peak withstand current (Ipk)		43.9 kA	
Protection		IP20	NEMA 1

The connecting capacity data for one Rigid: Solid/Stranded - Flexible conductor (when applicable) is a mandatory information required by IEC, UL and CSA standards (Copper conductors). All other data are provided as supplementary information only. For more details, please consult our CB, UL or CSA certificates and technical datasheet available on http://www.TE.com

CE RoHS USR CSA EAC

Mounting & wiring instructions

Rail: TH 35-7.5, TH 35-15

Connection Number		Size	Wire type		Wire stripping length	Tool	Torque
Input	1 x	26 x 10.8 mm 1.02 x 0.43 in	12 x 4 mm up to (2x) 25 x 5 mm	3 x 9 x 0.8 mm ... ... 10 x 24 x 1 mm	35 mm 1.38 in	5 mm 0.20 in	13.5 Nm 119.5 lb.in
Output	2 x	Ø 8.69 mm Ø 0.34 in	2.5 ... 25 mm² 14 ... 4 AWG	2.5 ... 35 mm² 14 ... 2 AWG	11 mm 0.43 in	4 mm 0.16 in	3.5 ... 5 Nm 31 ... 44 lb.in
	4 x	Ø 5.7 mm Ø 0.22 in	2.5 ... 10 mm² 14 ... 8 AWG	2.5 ... 10 mm² 14 ... 8 AWG	11 mm 0.43 in	3 mm 0.12 in	2 ... 3 Nm 18 ... 26.5 lb.in
	5 x	Ø 6.59 mm Ø 0.26 in	2.5 ... 16 mm² 14 ... 6 AWG	2.5 ... 16 mm² 14 ... 6 AWG	11 mm 0.43 in	3 mm 0.12 in	2 ... 3 Nm 18 ... 26.5 lb.in

Not allowed					
Flexible without ferrule (IEC V-K & UL: class 5/6)	Flexible with insulated ferrule (IEC V-K & UL: class 5/6)	Rigid Solid (IEC V-U class 1, UL solid)	Rigid stranded (IEC V-R class 2, UL class B/C)	Solid busbar	Flexible busbar

Allen key Posidriv - flat screwdriver

Accessories

1 2

	Description			Color	Type	Part Number		Pkg qty	Weight 1 pce g
1	End stops	10 mm	0.394 in	Dark grey	BAM4	1SNK900001R0000		50	14.00
		5.2 mm	0.205 in		BAZ1	1SNK900002R0000		50	5.30
		10 mm	0.394 in		BAZH1	1SNK900102R0000		20	24.00
2	Terminal block markers	Blank card		Green	MC512PA-GN	1SNK149997R0000		20	10.00
				Blue	MC512PA-BL	1SNK149998R0000		20	10.00
				White	MC512PA	1SNK149999R0000		20	10.00
		Pre-printed marker card (L1-L2-L3-N-PE)			MC512PA	1SNK149002R0000		1	10.00

Complete list of accessories is indicated in the terminal block datasheet including end stops. Some accessories such as jumper bars may modify the terminal block's ratings: Complete information available in the accessories section of the catalog.

1SNC166023S0201

Index
Part Number/Type classification

Part Number	Type	Page
1SNK		
1SNK149002R0000	MC512PA	8
1SNK149997R0000	MC512PA-GN	8
1SNK149998R0000	MC512PA-BL	8
1SNK149999R0000	MC512PA	8
1SNK900001R0000	BAM4	8
1SNK900002R0000	BAZ1	8
1SNK900102R0000	BAZH1	8
1SNL		
1SNL308010R0000	DBL80	8
1SNL312510R0000	DBL125	9
1SNL312530R0000	DBL125-3	10
1SNL316010R0000	DBL160	11
1SNL317510R0000	DBL175	12
1SNL317531R0000	DBL175-C-3	13
1SNL325010R0000	DBL250	14
1SNL325060R0000	DBL250-F	15
1SNL340010R0000	DBL400	16
1SNL340011R0000	DBL400-PV	17
1SNL350060R0000	DBL500-F	19
1SNL850001R0000	DBL500-22	18

Type	Part Number	Page
B		
BAM4	1SNK900001R0000	8
BAZ1	1SNK900002R0000	8
BAZH1	1SNK900102R0000	8
D		
DBL80	1SNL308010R0000	8
DBL125	1SNL312510R0000	9
DBL125-3	1SNL312530R0000	10
DBL160	1SNL316010R0000	11
DBL175	1SNL317510R0000	12
DBL175-C-3	1SNL317531R0000	13
DBL250	1SNL325010R0000	14
DBL250-F	1SNL325060R0000	15
DBL400	1SNL340010R0000	16
DBL400-PV	1SNL340011R0000	17
DBL500-22	1SNL850001R0000	18
DBL500-F	1SNL350060R0000	19
M		
MC512PA	1SNK149002R0000	8
MC512PA	1SNK149999R0000	8
MC512PA-BL	1SNK149998R0000	8
MC512PA-GN	1SNK149997R0000	8

1-1773959-2_Index_TE

Notes

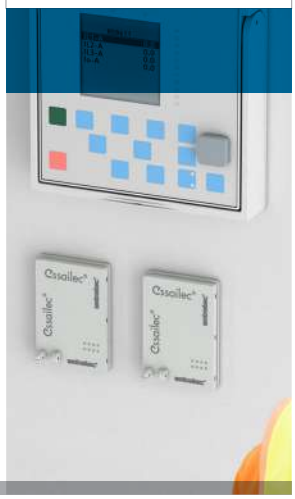

ESSAILEC® TEST BLOCKS

ENTRELEC Terminal Blocks

ESSAILEC® test blocks allow to safely and easily perform test operations such as current and voltage measurement, monitoring, injection, repair or replacement of meters and protective relays installed in secondary circuits of current and voltage transformers or sensors.

ESSAILEC® test blocks

Overview 1/ 3

Current and voltage sensors application 2/ 9

Test principles - ESSAILEC® RJ45 10

ESSAILEC® RJ45 sockets for current and voltage sensors 14

Current transformers application 3/ 15

Test principles - ESSAILEC® RJ45 16

ESSAILEC® sockets for Current Transformers 22

ESSAILEC® pre-wired plugs for Current Transformers 24

ESSAILEC® universal adaptor with Ø 4mm outputs 25

ESSAILEC® customized plugs 26

Voltage transformers application 4/ 29

Make before break 30

Break before make 36

Closed contact 42

Independent circuits 48

Pre-wired plugs 49

Customized plugs 51

Protection lids and covers 5/ 55

Multicircuits 6/ 56

Mounting instructions 7/ 57

Mounting instructions for coding 58

Outer dimensions, mounting instructions 60

Index 8/ 64

1-1773959-3_EN - Edition July 2019

ESSAILEC® test blocks allow to safely and easily perform test operations such as current and voltage measurement, monitoring, injection, repair or replacement of meters and protective relays installed in secondary circuits of current and voltage transformers or sensors.

Continuous operation

Easy plug & play solution

ESSAILEC® allows a simultaneous test of 1 to 4 circuits thanks to the combination of a plug and a socket.

Fast test operation

Thanks to make before break principle, the current transformers short circuiting is automatically performed (no cursor or switch element to operate manually).
Current testing without cutting the energy supply.

Safety and protection

Operator's safety

IP20 protection for the socket and IP40 with the cover.
Sealing option available to prevent unauthorized access.

Error free systems

Coding system on plugs & sockets prevent from risks of mixing between various circuits.
Protection against reverse plug insertion.

Unitary traceability

Engraved on insulating body.

Easy to install

Multiple choice of mounting

5 possibilities to install ESSAILEC® on front, within the panel or on a plate.

Various choice of wiring technologies

ESSAILEC® offers several connection types: ring tongue, screw clamp, quick-connect and RJ45, to allow different wire terminations and connections up to 10 mm².

1SNC169001S0201

ESSAILEC® is especially designed to fit the electricity utilities requirements for safe and reliable testing. The test operations can be made without any circuit break and without opening the panel door.
ESSAILEC® is approved by major utilities and successfully implemented for years in worldwide electricity production, transport and distribution networks.

ESSAILEC® operation principle

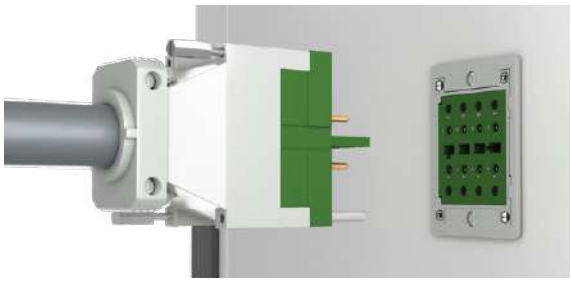

ESSAILEC® is based on a plug & play operation solution.
It is composed of a socket and a test plug.
The socket is installed in the circuit and wired to the device to be tested during its installation or servicing (protection relay in switchboard or meters).
The plug is connected to the test set and allows measurement or signal injection.

Socket design

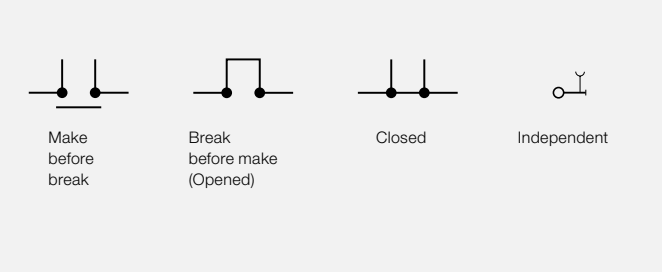

The sockets are available in the following designs:

- Socket with "Make before break" contact design, available in the current, voltage, and RJ45 ranges
- Socket with "Break before make" (opened) contact design, available in voltage application
- Socket with "Closed" contact design, available in voltage application
- Socket with "4 independent circuits" for voltage application.

1SNC169002S0201

Safety & protection

Color coding

Prevent from risks of mixing between various circuits.
Color coding: green for current applications, grey / orange / blue for voltage applications.

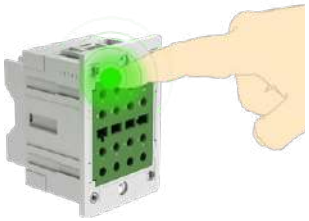

IP20

IP40

Seal

Operator's safety

Front protection IP20 for the socket and IP40 with the protective lid.
The protective lid is equipped with a sealing option to prevent unauthorized access.

Locking mechanism

Secure the plug on the socket.
No risk of unplugging during test operations.

Error free systems thanks to coding pins

Up to 6 possible combinations to allocate test plug with its appropriate socket for circuit differentiation.

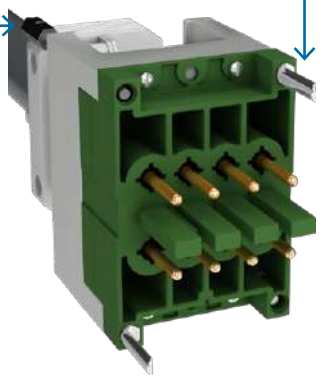

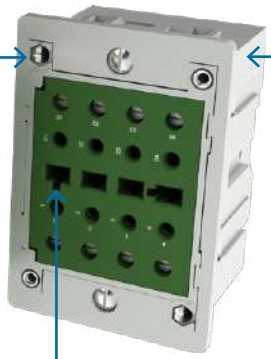

Unitary traceability

The socket integrates a permanent tracking number engraved on insulating body.

Protection against reverse plug insertion

Socket and plug integrate a special plastic shape preventing the circuit polarities reversal.

1SNC169002S0201

Easy to install

Multiple choices of socket mounting

Mounting on panel: front or base mounting

Flush mounting

Half-base mounting

Base mounting

Mounting within the panel.

TH35 rail mounting

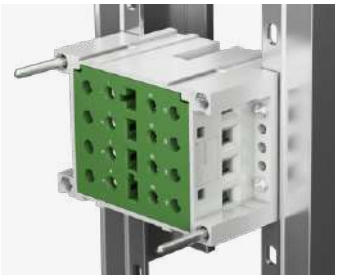

Rack mounting

Various choices of wiring technologies

ESSAILEC® offers several connection types (according to the mounting selected): ring tongue, screw clamp, quick-connect and RJ45, to allow different wire terminations and connections up to 10 mm².
Refer to sockets panorama page for more details.

Ring tongue

Quick-connect

Screw clamp

RJ45

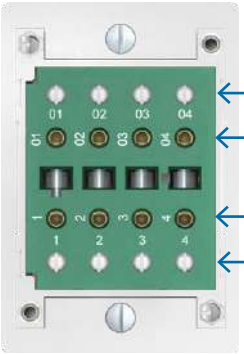

Easy circuit identification

- 01, 02, 03, 04: equipment side.
- Premarked block in two directions to allow convenient reading whatever the mounting sense.
- 1, 2, 3, 4: transformers side.

1SNC169002S0201

Plug

The plug is connected to the test equipment by means of test plugs. Plugs are supplied in various configurations, either prewired or ready to be customized.

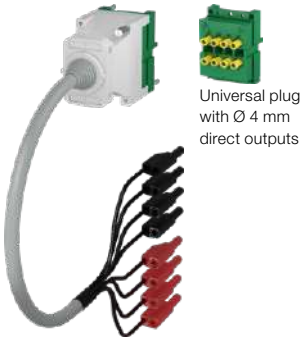

Universal plug with Ø 4 mm direct outputs

Pre-assembled plug

Pre-assembled plug

Pre-assembled plug

Plug with crimping pins for customization

Plugs for customization

2x4 poles plugs (8 contact pins)
Allow testing of 4 current or voltage circuits.
Available in different colors (green, grey, orange, blue).

4 poles plugs (4 contact pins)
Allow testing of 4 voltage circuits.
Available in different colors (grey, orange, blue).

1 pole plugs (2 contacts pins)
Allow testing of 1 current or voltage circuit.
Available in different colors (red for current applications or grey for voltage applications).

Plugs for customization
In order to provide more flexibility to the end-users ESSAILEC® plugs can be customized according to the targeted application (see customized plugs catalog page).

Protection

Lid or Cover provide dust protection (IP40) and prevent unauthorized access thanks to their embedded sealing option.
Lid and cover with electrical continuity, are necessary compatible with opened contacts sockets (Break before make).
Thanks to their inner pins and linking bars they ensure the circuits continuity.

Lid

Cover

Lid with electrical continuity

Cover with electrical continuity

1SNC169002S0201

Sockets panorama

Contact type	Mounting	Connection	For current and voltage sensors	For current transformers	For voltage transformers		
					Grey coding (standard)	Blue coding (polarity)	Orange coding (trip)
Make before break	Flush	Ring-tongue	–	CC-E-VA	TC-E-VA	PC-E-VA	–
			–	CC-E-VA-6.6	TC-E-VA-2.2	PC-E-VA-8.8	–
			–	CC-E-VA-R2-6.6	TC-E-VA-R2-2.2	–	–
		RJ45	TC-E-RJ45-INF	–	–	–	–
		Quick connect	–	–	TC-E-C5A-2.2	–	–
	Half-base	Ring-tongue	–	CC-D-VA	TC-D-VA	PC-D-VA	–
	Base/Half-base	Screw clamp	–	–	TC-DS-VL	PC-DS-VL	–
	Base	Screw clamp	–	CC-S-INF-VL-6.6	TC-S-INF-VL-2.2	–	–
	TH35	Screw clamp	–	CC-TH35-VL-6.6	TC-TH35-VL	–	–
	Rack	Ring-tongue	–	CC-R-VA	–	–	–
	Reverse	Ring-tongue	–	CC-I-VA-2	–	–	–
Break before make Opened contact	Flush	Ring-tongue	–	–	TO-E-VA	PO-E-VA	DEO-E-VA
			–	–	TO-E-VA-12.12	–	–
	Half-base	Ring-tongue	–	–	TO-D-VA	PO-D-VA	DEO-D-VA
	Base/Half-base	Screw clamp	–	–	TO-DS-VL	PO-DS-VL	–
	Base	Screw clamp	–	–	TO-S-INF-VL-12.12	–	–
	Reverse	Ring-tongue	–	–	TO-I-VA-2	–	–
Closed contact	Flush	Ring-tongue	–	–	TF-E-VA	PF-E-VA	–
	Half-base	Ring-tongue	–	–	TF-D-VA	PF-D-VA	DEF-D-VA
	Base/Half-base	Screw clamp	–	–	TF-DS-VL	PF-DS-VL	–
Independent circuits	Base	Screw clamp	–	–	TT4-S-VL-INF	–	–

Socket designation

Circuit type
- C: Current
- T: Voltage
- P: Polarity
- DE: Trip

Mounting
- E: Flush
- TH35: Symmetrical rail TH35
- DS: Half-base / Base
- D: Half-base
- S: Base
- R: Rack
- I: Reverse
- P: Connector style

Coding
- 6.6: Current
- 2.2: Voltage
- 8.8: Polarity
- INF: With lid or cover
- Ø: Without lid or cover

C C - E - VA - 6.6

Contacts
- C: Make before break
- O: Opened
- F: Closed

Connection
- VA: Ring-tongue
- VL: Screw clamp
- C5A: Quick-connect
- RJ45: RJ45 wire

1SNC169003S0201

Test principles - ESSAILEC® RJ45 10

ESSAILEC® RJ45 sockets for current and voltage sensors 14

Current and voltage sensors application

Make before break test principle - Measurement with ESSAILEC® RJ45 test plug

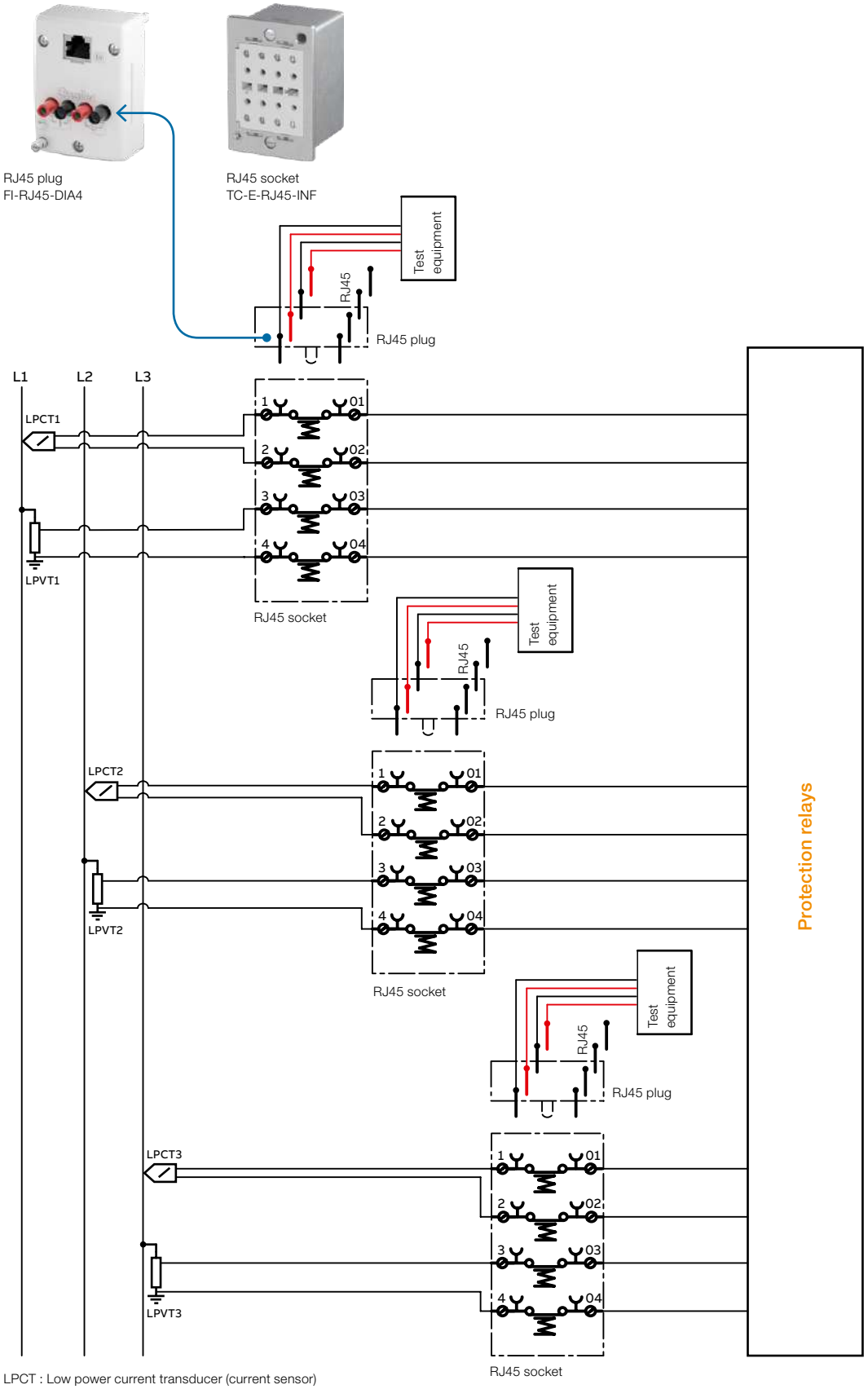

LPCT : Low power current transducer (current sensor)
LPVT: Low power voltage transducer (voltage sensor)

1SNC169004S0201

Make before break base - Injection with ESSAILEC® RJ45 test plug

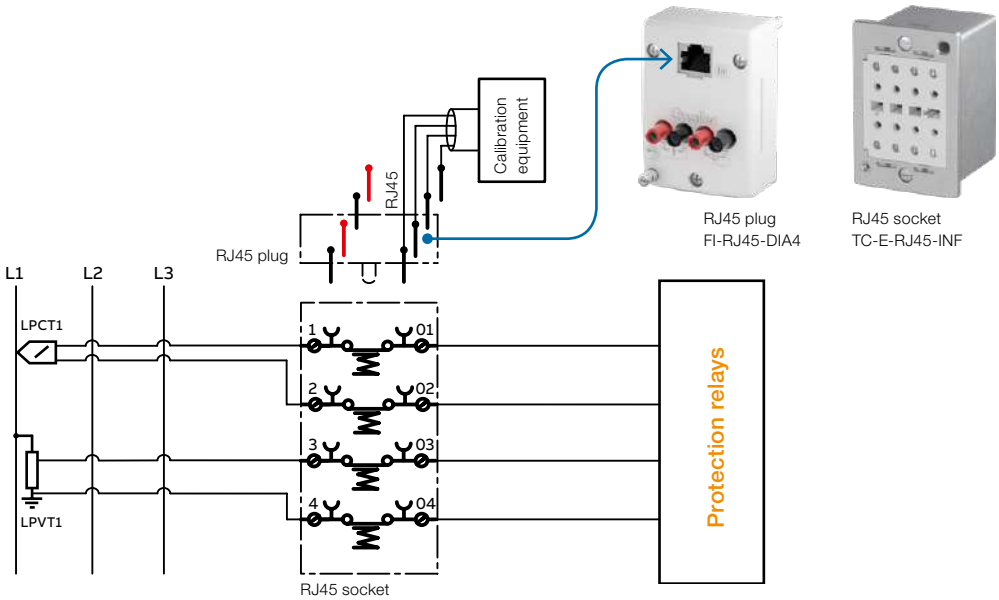

LPCT : Low power current transducer (current sensor)
LPVT: Low power voltage transducer (voltage sensor)

1SNC169004S0201

Current and voltage sensors application

Make before break test principle - With ESSAILEC® RJ45 test plug

Applications

- Injection
- Equipment replacement

1. Normal service

1.1 ESSAILEC® RJ45 sockets have a shielded body. The 3 sockets are required to cover the testing operation on the 3 main lines (L1, L2, L3).

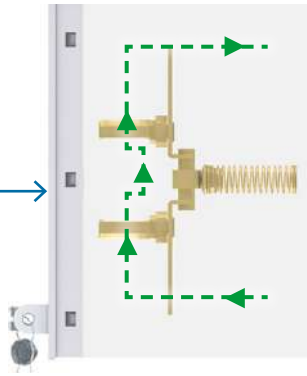

1.2 The lid is installed on the socket and can be sealed to prevent unauthorized access.
The socket **circuits are closed** and signals flow from current and voltage sensors to protection relay.

2. Lid removal

The lid **is removed.**

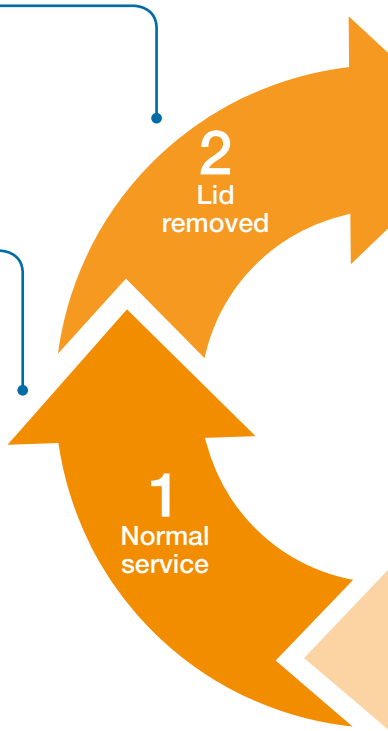

4.2 Test phase: Injection

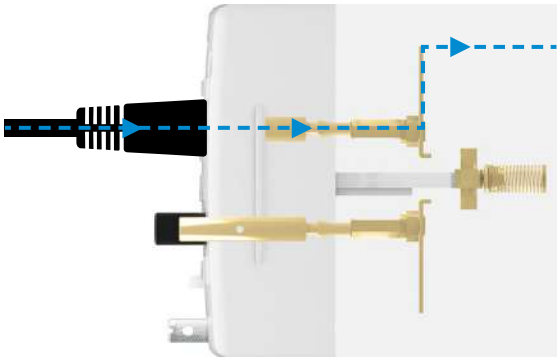

The RJ45 plug allows to perform **injection.** Plug a **RJ45 connector** on to the ESSAILEC® RJ45 plug to test the protection relay through the integrated RJ45 input.

3. Preparation: Test plugs connections

3.1 The test equipment is equipped with **dia. 4 test plugs.**

3.2 The ESSAILEC® RJ45 test plug has **built-in dia. 4 (1) and RJ45 test sockets (2)** in order to simplify the test operations. They allow current and voltage **sensors measurement (1)** as well as **injection to the protection relay (2).**

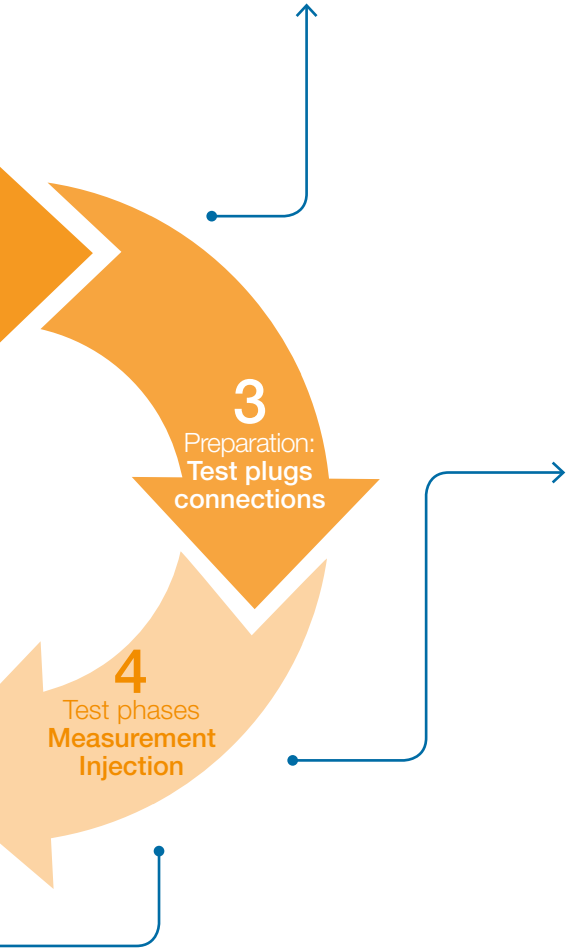

4. Test phase: Make before Break

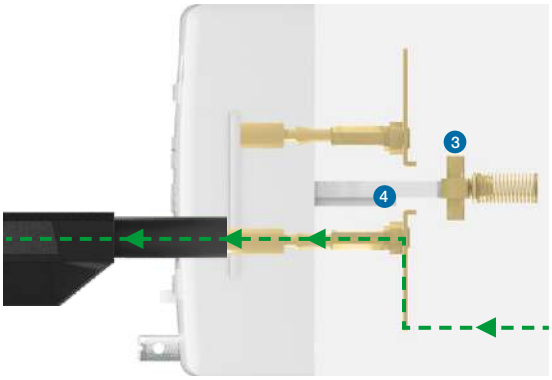

When the plug is fully inserted in the socket, inner mobile contacts (3) are pushed down by plug's plastic leads (4) and circuits are opened. Signals are derived into the **dia. 4** plug towards the test set.
It is possible to perform simultaneously current and voltage sensors measurement.

4.1 Test phase: Measurement

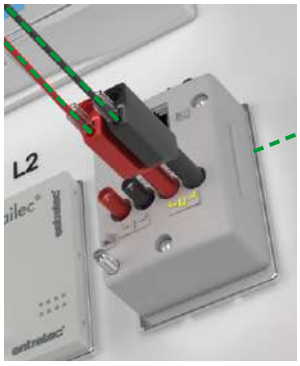

Ex: Voltage sensors measurement

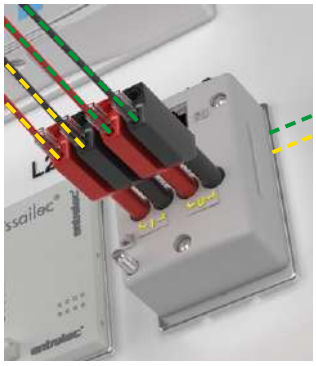

Ex: Voltage and current sensors measurement

1SNC169009S0201

Current and voltage sensors application

ESSAILEC® RJ45 sockets for current and voltage sensors - Make before break

TC-E-RJ45

Description

Dedicated for the use in Digital Switchgear including sensors (current or voltage):

- RJ45 connection type (Cat.5),
- Allow safe and easy measurement and injection operations,
- Signals protection against EMI/RFI thanks to shielded lid on shielded socket,
- Shielding tests according to IEC 62271-1 Annex J,
- Grounding point: M5 screw to be wired with an adapted ring lug termination.

Make before break principle:

- The circuits are automatically disconnected with the insertion of the plug,
- The circuits close automatically when the plug is removed.

Main technical data

Connecting capacity	IEC 947-1
Body	Polycarbonate UL94 V0
Conductive parts	Silver-plated
Rated voltage	125 V
Impulse withstand voltage	1000 V
Pollution degree	3
Rated current	1.5 A
Accuracy	0.5 %
Storage temperature range	-40 ... +85 °C
Working temperature range	-40 ... +85 °C
Protection without lid / with lid	IP20 / IP40

Mounting instructions

Tool (for grounding screw)	Posidriv Ø 4 mm Ø 0.16 in
Torque (for grounding screw)	1.2 Nm 10.8 lb.in

Ordering details

Color		Type	Part Number		Pkg qty	Weight 1 pce g	Compatible products: Lid / Cover	Plug	Socket
Socket									
Flush mounting									
Grey	☐	TC-E-RJ45-INF	1SNA566000R0000		3	138	Included	FI-RJ45-DIA4	–
Plug									
Grey	☐	FI-RJ45-DIA4	1SNA566001R0000		1	69.6	–	–	TC-E-RJ45-INF

Accessories

	Description	Color		Type	Part Number		Pkg qty	Weight (1 pce) g
1	Protecting covers for RJ45 sockets	Grey	☐	CPT-RJ45	1SNA167002R0000		1	25.4

For connection details, please refer to mounting instruction 1SNC169044L1701

1SNC169010S0201

Test principles 16

ESSAILEC® sockets for Current Transformers 22

ESSAILEC® pre-wired plugs for Current Transformers 24

ESSAILEC® universal adaptor with Ø 4mm outputs 25

ESSAILEC® customized plugs 26

Measurement with 2x4 poles test plug

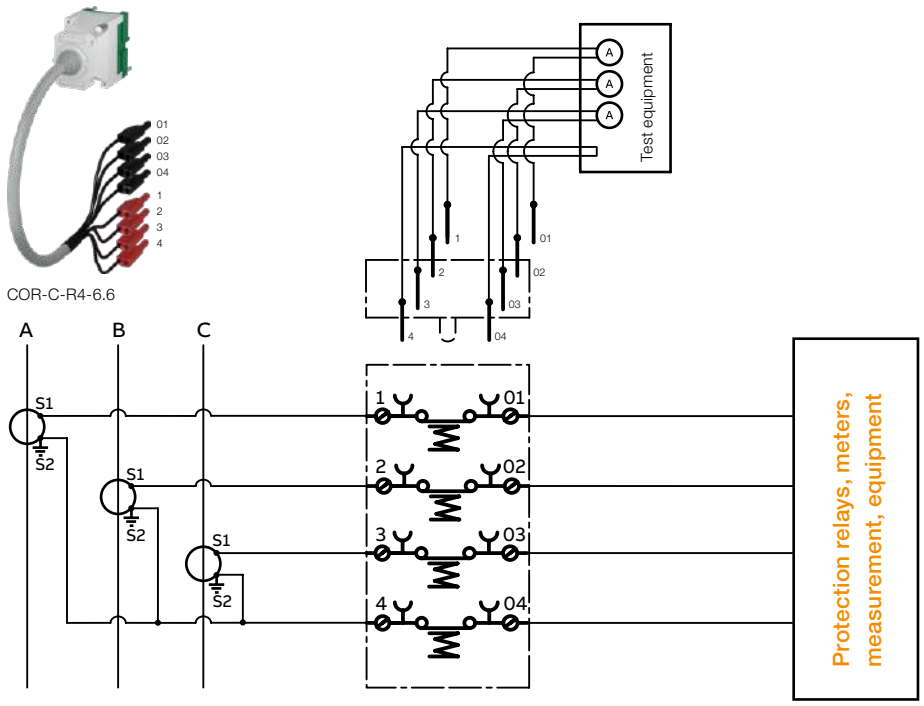

Injection or equipment replacement with 2x4 poles test plug

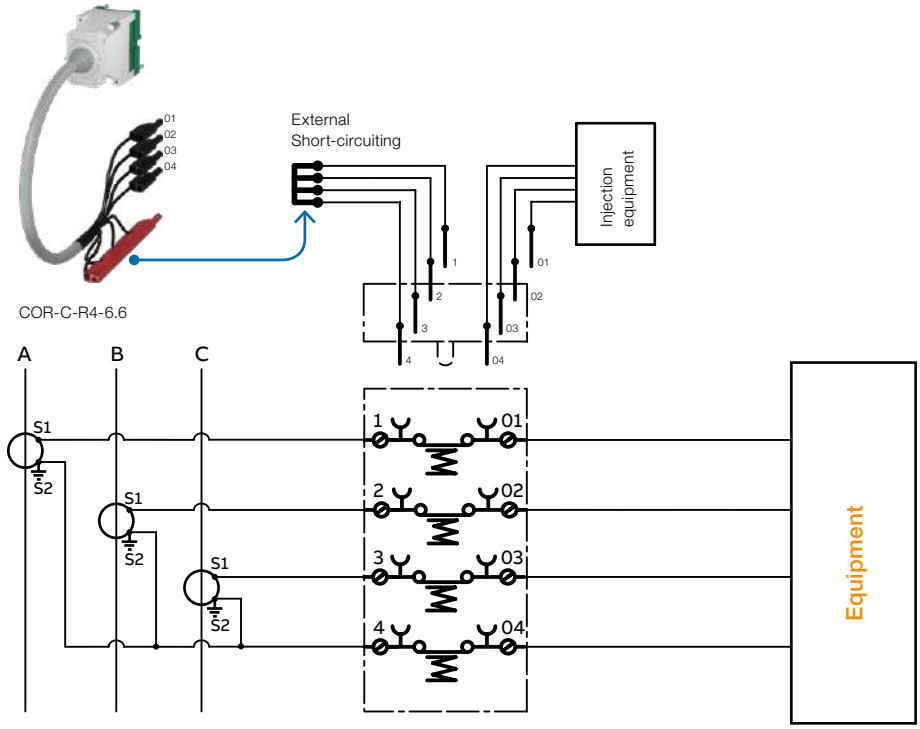

1SNC169005S0201

Injection or equipment replacement with 2x4 poles test plug (4 poles short-circuit)

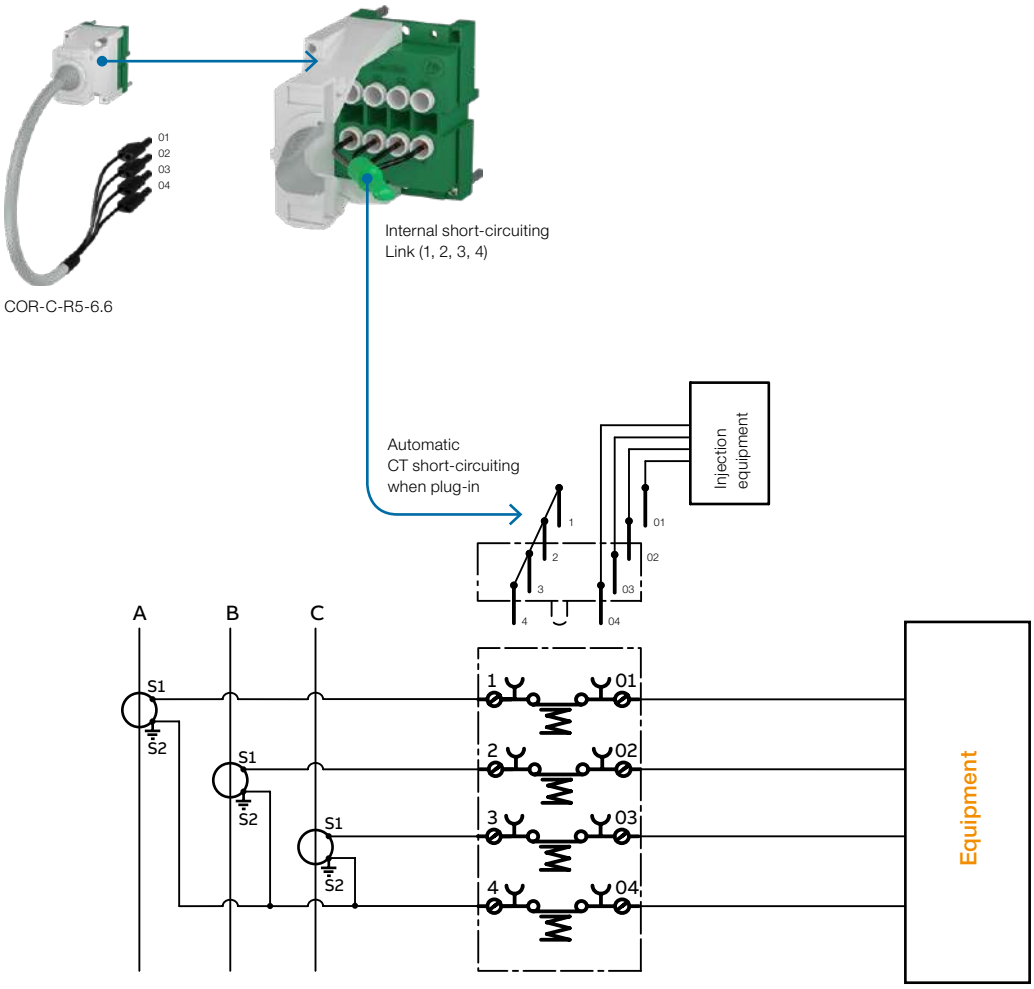

1SNC169005S0201

Current transformers application
Make before break test principle - With 2x4 poles test plug

Applications
- Measurement on CT's
- Injection
- Equipment replacement

1. Normal service

1.1 ESSAILEC® current sockets allow the simultaneous testing operations of 1 to 4 independent circuits on the same socket.

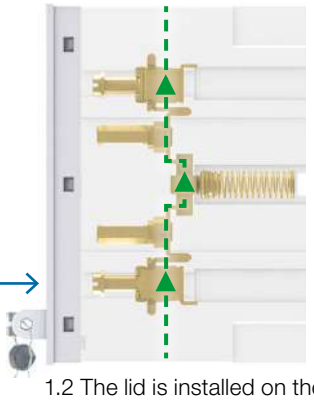

1.2 The lid is installed on the socket and can be sealed to prevent unauthorized access. **The socket circuits are closed** and signals flow from current transformers to the equipment to be tested.

2. Preparation: plug and lid

2.1 The lid is removed.

2.2 **Connect the ESSAILEC® test plug leads** to the test set. (For equipment change or injection, short-circuit externally the 4 test leads connected on the current transformer side: 1-2-3-4)

5. Back to normal service

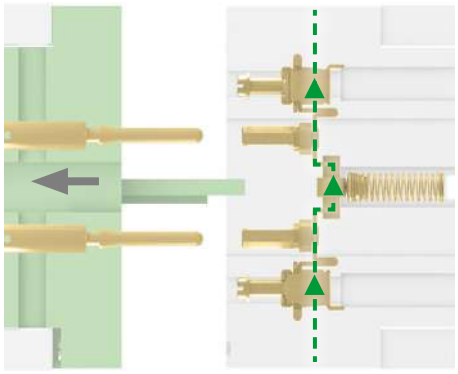

5.1 **Plug removal closes back the socket contacts** and signals flow again through the socket.

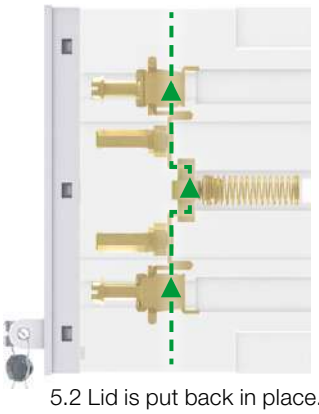

5.2 Lid is put back in place.

3. Test phase: Make

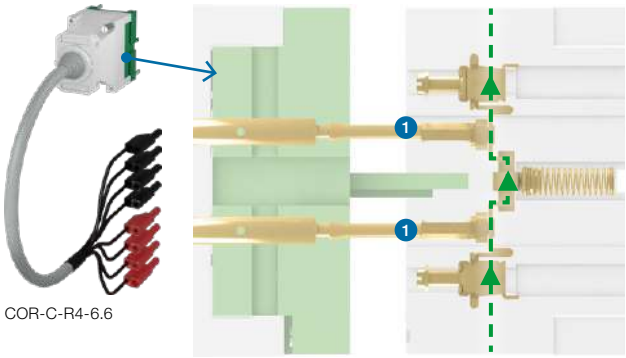

During plug insertion, plug pins make contact with socket pins (1). **Contacts remain closed and the signal flow has not change.** This operation prevent signal interruption (mandatory for current transformers).

4.1 Measurement: Test phase - Break

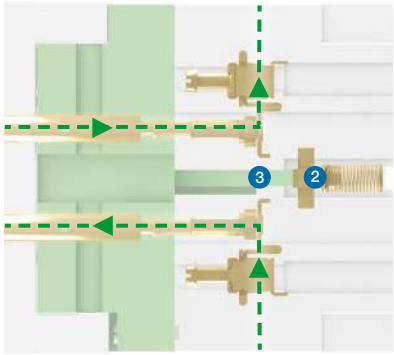

When the plug is fully inserted in the socket, inner mobile contacts (2) are pushed down by plug's plastic leads (3) and **the four circuits are opened simultaneously**. Signals are derived into the plug towards the test set without interruption of continuity.

4.2 Injection or equipment replacement: Test phase - Break

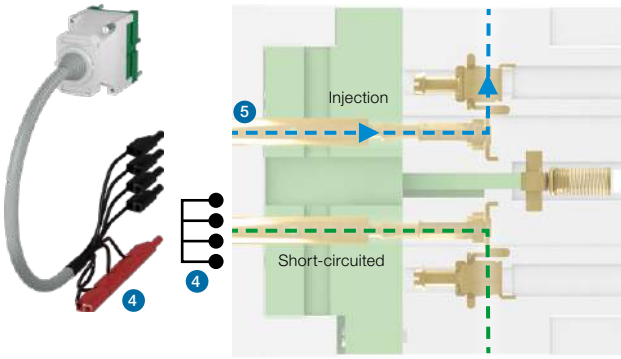

During preparation phase, the plug 4 test leads (1-2-3-4: current transformer side) **have been short-circuited externally (4).**
When the plug is fully inserted in the socket, **the current transformer is automatically short-circuited** and current injection (or equipment change) can be done on the equipment side (5).

1SNC169011S0201

Current transformers application

Make before break test principle - With 2x4 poles test plug (4 poles short-circuited)

Applications

- Measurement on CT's
- Injection
- Equipment replacement

1. Normal service

1.1 ESSAILEC® current sockets allow the simultaneous testing operations of 1 to 4 independent circuits on the same socket.

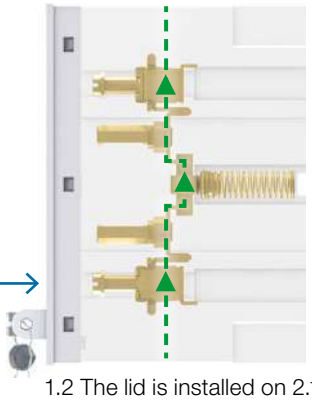

1.2 The lid is installed on 2.1 The lid **is removed.** equipment side (1-2-3-4). The socket and can be sealed **to prevent unauthorized access.** The socket circuits are closed and signals flow from current transformers to the equipment to be tested.

2. Preparation: plug and lid

2.1 The lid **is removed.**

2.2 **Connect the ESSAILEC® test plug** leads to the test set. This plug is equipped with a built-in short-circuiting on equipment side (1-2-3-4).

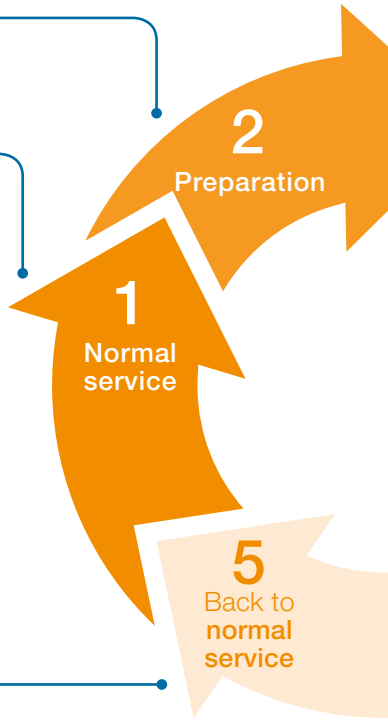

5. Back to normal service

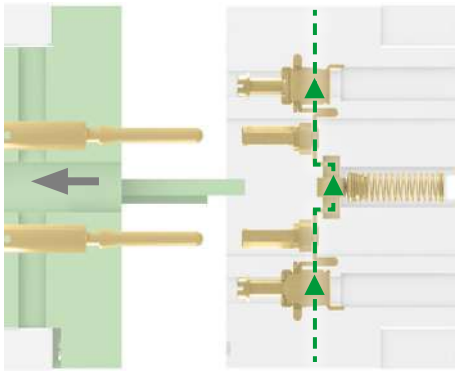

5.1 **Plug removal closes back the socket contacts** and signals flow again through the socket.

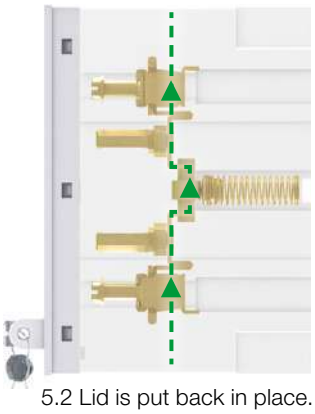

5.2 Lid is put back in place.

3. Test phase: Make & CT short-circuiting

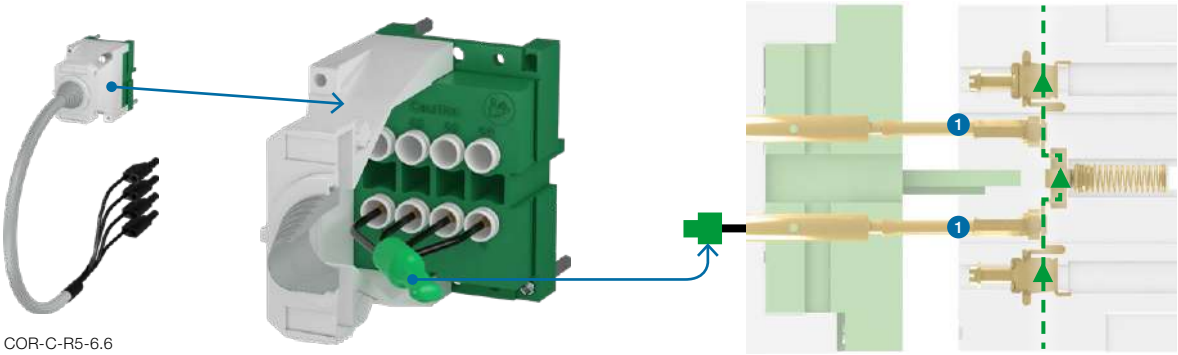

COR-C-R5-6.6

The plug is equipped with built in short circuited contacts on current transformers side (1-2-3-4)
During plug insertion, plug pins make contact with the socket pins (1), **and simultaneously the current transformer is short-circuited.**

3
Test phase:
Make

4
Test phase:
Break

4. Test phase: Break and short-circuit (injection or equipment replacement)

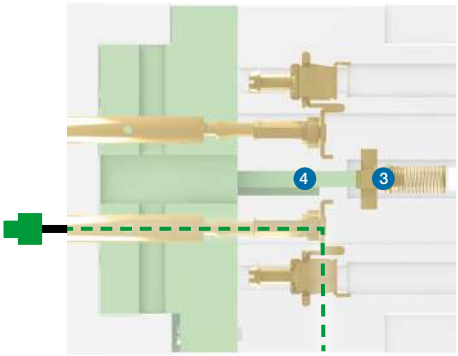

4.1 When the plug is fully inserted in the socket, inner **mobile contacts (3) are opened by plastic lead (4).** The current transformer is automatically short-circuited and circuits are opened.

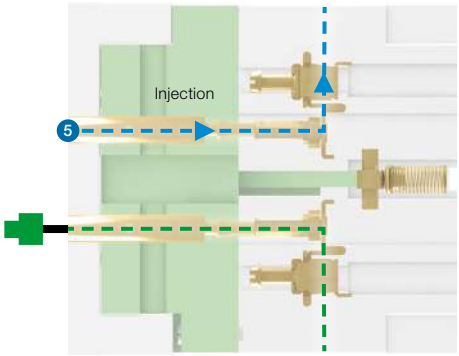

4.2 Current injection can be done on the equipment (5).

1SNC169012S0201

Current Transformers application

ESSAILEC® sockets for Current Transformers – Make before break

CC-E-VA

Description

Short-circuited type contacts for measurement, calibration and distribution applications.

Make before break principle:

- The circuit is automatically shorted with the insertion of the plug.
- The circuit closes automatically when the plug is removed.
- This system guarantees a complete safety.
- By convention, green coding is for current circuit.

Main technical data

Connecting capacity		IEC 947-1
Screw clamp (VL)	Rigid: Solid/Stranded	0.2 ... 6 mm²
	Flexible with insulated ferrule	0.22 ... 4 mm²
Ring tongue (VA)	Flexible with insulated ferrule	0.34 ... 10 mm²
	Ø lug hole size	3 mm
	Width	7.5 mm
Body		Polycarbonate
Conductive parts		Gold-plated
Rated voltage		400 V
Impulse withstand voltage		4000 V
Pollution degree		3
Rated current		15 A
Short-circuit current		100 A/5 s ... 200 A/1 s
Storage temperature range		-25 ... +70 °C
Working temperature range		-10 ... +55 °C
Protection without lid / with lid		IP20 / IP40
Coding color		Green

Mounting instructions

Rail	G32, TH 35-7.5, TH 35-15
Screw clamp	
Wire stripping length	9.5 mm 0.370 in
Tool	Flat screwdriver Ø 4 mm Ø 0.157 in
Torque	0.5 ... 0.8 Nm 4.4 ... 7.1 lb.in

Ordering details / Compatible products

Type	Part Number		Pkg qty	Weight 1 pce g	Lid	Cover	Universal plug Ø 4 mm	Pre-wired plugs 2x4 poles Ø 4 mm bayonet	4 poles Ø 4 mm bayonet	1 pole Ø 4 mm bayonet
Flush mounting										
Ring-tongue										
CC-E-VA	1SNA166737R2000		1	145	CPC-1	–	FIC-2/4-DIA4	COR-C-R4-6.6	COR-C-R5-6.6	COR-C-R3
CC-E-VA-6.6	1SNA166625R2000		1	150	Lid + coding included					
CC-E-VA-R2-6.6	1SNA166976R0000		50	170				COR-C-R1-6.6	COR-C-R2-6.6	COR-C-3
Base / Half-base mounting										
Screw clamp										
CC-S-INF-VL-6.6	1SNA166722R2100		1	200	–	Cover + coding included	FIC-2/4-DIA4	COR-C-R4-6.6	COR-C-R5-6.6	COR-C-R3
								COR-C-R1-6.6	COR-C-R2-6.6	COR-C-3
Ring-tongue										
CC-D-VA	1SNA166738R0100		1	90	CPC-1	–	FIC-2/4-DIA4	COR-C-R4-6.6	COR-C-R5-6.6	COR-C-R3
								COR-C-R1-6.6	COR-C-R2-6.6	COR-C-3
TH35 rail mounting										
Screw clamp										
CC-TH35-VL-6.6	1SNA166963R0000		1	114	CPC-1	included	FIC-2/4-DIA4	COR-C-R4-6.6	COR-C-R5-6.6	COR-C-R3
								COR-C-R1-6.6	COR-C-R2-6.6	COR-C-3
Rack mounting										
Ring-tongue										
CC-R-VA	1SNA166523R1200		1	140	CPC-1	–	FIC-2/4-DIA4	–	–	COR-C-R3
								–	–	COR-C-3
Reverse mounting										
Ring-tongue										
CC-I-VA-2	1SNA166941R2500		1	210	–	–	–	–	–	COR-C-R3
								–	–	COR-C-3

* compatible with CC-DS-VL socket only in "base" mounting option.

1SNC169016S0201

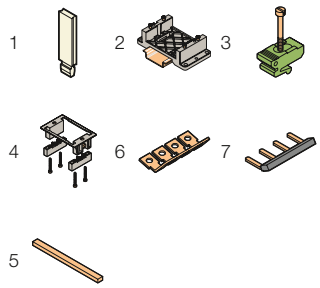

Accessories

	Description		Type	Part Number		Pkg qty	Weight 1 pce g
1	Interlocking peg	For 2 sockets assembly	CVABM	1SNA183436R0500		10	0.4
2	Mounting kits	For TH35 rail (a)	KEM-3	1SNA166962R0000		10	24
3		For DIN 1 rail (a)	FX	1SNA167682R2300		10	20
4		For ring-tongue flush mounting (b)	KEM-1	1SNA166928R2000		50	18
6	Lateral jumper bars	Compatible with ring-tongue connection only (VA) (b)	PCVA	1SNA167496R1100		10	1
7		Compatible with screw connection only (VL); IP20 (c)	PCVL	1SNA167681R2200		10	1
5	Jumper bars	For two sockets screw connection type (c)	BJ-VL	1SNA167680R0500		10	1

(a) compatible with base mounting only.
(b) compatible with ring-tongue connection type socket only (VA).
(c) compatible with screw connection type socket only (VL).

Compatible products

Lid
CPC-1

Cover
CPC-7

Plug 2x4 poles bayonet
COR-C-R1-6.6

Plug 4 poles bayonet
COR-C-R2-6.6

Plug 1 pole bayonet
COR-C-3

Universal plug
FIC-2/4-DIA4

Plug 2x4 poles Ø 4 mm
COR-C-R4-6.6

Plug 4 poles Ø 4 mm
COR-C-R5-6.6

Plug 1 pole Ø 4 mm
COR-C-R3

Connection technologies

Ring-tongue

Screw clamp

1SNC169016S0201

Description

- Standard current plugs are compatible with ESSAILEC® current sockets.
- Plugs are pre-wired with contact pins (BRE...) , coding, cables and test plugs assembled to ease your test operations.

Main technical data

Connecting capacity	IEC 947-1
Body	Polycarbonate
Conductive parts	Gold-plated
Rated voltage	400 V
Impulse withstand voltage	4000 V
Pollution degree	3
Rated current	15 A
Short-circuit current	100 A/5 s ... 200 A/1 s
Storage temperature range	-25 ... +70 °C
Working temperature range	-10 ... +55 °C

Ordering details

Description	Type	Part Number		Pkg qty	Weight 1 pce g	Compatible products Socket
Plug 2x4 poles						
1 plug 2x4 pins / Green 4 x Ø 4 mm test plugs / Black 4 x Ø 4 mm test plugs / Red Conductors section: 2.5 mm² cable length: 2 m / 79"	COR-C-R4-6.6	1SNA167932R1500		1	1080	CC-E-VA CC-E-VA-6.6 CC-E-VA-R2-6.6 CC-S-INF-VL-6.6 CC-D-VA CC-TH35-VL-6.6
1 plug 2x4 pins / Green 4 bayonet security test plugs / Green 4 bayonet security test plugs / Red Conductors section: 2.5 mm² cable length: 2 m / 79"	COR-C-R1-6.6	1SNA166638R0500		1	1080	CC-E-VA CC-E-VA-6.6 CC-E-VA-R2-6.6 CC-S-INF-VL-6.6 CC-D-VA CC-TH35-VL-6.6
Plug 4 poles						
1 plug 2x4 pins with 4 short circuited pins (1-2-3-4) / Green 4 x Ø 4 mm test plugs / Black Conductors section: 2.5 mm² cable length: 2 m / 79"	COR-C-R5-6.6	1SNA167934R1700		1	670	CC-E-VA CC-E-VA-6.6 CC-E-VA-R2-6.6 CC-S-INF-VL-6.6 CC-D-VA CC-TH35-VL-6.6
1 plug 2x4 pins with 4 short circuited pins (1-2-3-4) / Green 1 bayonet security test plug / Green 1 bayonet security test plug / Grey 1 bayonet security test plug / Brown 1 bayonet security test plug / Yellow Conductors section: 2.5 mm² cable length: 2 m / 79"	COR-C-R2-6.6	1SNA166778R1100		1	670	CC-E-VA CC-E-VA-6.6 CC-E-VA-R2-6.6 CC-S-INF-VL-6.6 CC-D-VA CC-TH35-VL-6.6
Plug 1 pole						
1 plug 2 pins / Red 2 dia. 4 mm test plugs / Black	COR-C-R3	1SNA166979R0000		1	320	CC-E-VA CC-E-VA-6.6 CC-E-VA-R2-6.6 CC-S-INF-VL-6.6 CC-D-VA CC-TH35-VL-6.6 CC-R-VA CC-I-VA-2
1 plug 2 pins / Red 2 bayonet security test plugs / Yellow	COR-C-3	1SNA166643R0200		1	320	CC-E-VA CC-E-VA-6.6 CC-E-VA-R2-6.6 CC-S-INF-VL-6.6 CC-D-VA CC-TH35-VL-6.6 CC-R-VA CC-I-VA-2

1SNC169017S0201

ESSAILEC® universal adaptor with Ø 4mm outputs

FIC-2/4-DIA4

Description

- Universal adaptor compatible with all ESSAILEC® current socket
- It ensures quick and consistently reliable ESSAILEC® sockets tests
- Ø 4 mm test plugs may be inserted directly without the need for extra accessories or tools. It is compatible with all the insulated Ø 4mm test plugs available on the market

Standard current plugs are compatible with ESSAILEC® current sockets.

- Plugs are pre-wired with contact pins (BRE...) , coding, cables and test plugs assembled to ease your test operations.

Main technical data

Connecting capacity	IEC 947-1
Body	Polycarbonate
Conductive parts	Gold-plated
Rated voltage	400 V
Impulse withstand voltage	4000 V
Pollution degree	3
Rated current	15 A
Short-circuit current	100 A/5 s ... 200 A/1 s
Storage temperature range	-25 ... +70 °C
Working temperature range	-10 ... +55 °C

Ordering details

Description	Type	Part Number		Pkg qty	Weight 1 pce g	Compatible products Socket
Universal plug						
Plug 2x4 pins with direct insertion Ø 4 mm	FIC-2/4-DIA4	1SNA167937R0000		1	60	CC-E-VA CC-E-VA-6.6 CC-E-VA-R2-6.6 CC-S-INF-VL-6.6 CC-D-VA CC-TH35-VL-6.6 CC-R-VA

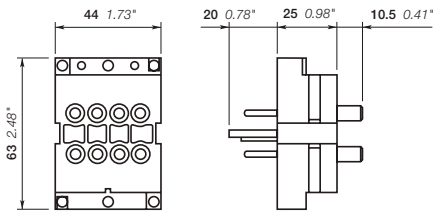

Dimensions (mm, inches)

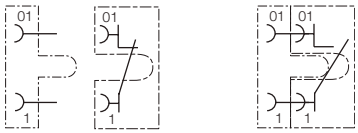

Adaptor Socket Adaptor + socket

Electrical wiring for a socket with short-circuited contacts and an universal adaptor

For connection details, please refer to mounting instruction 1SNC169041L0201

1SNC169018S0201

Description

Short-circuited type contacts for measurement, calibration and distribution applications.

Make before break principle:

- The circuit is automatically shorted with the insertion of the plug.
- The circuit closes automatically when the plug is removed.
- This system guarantees a complete safety.
- By convention, green coding is for current circuit.

Ordering details

Description	Type	Part Number		Pkg qty	Weight 1 pce g	Compatible products Socket
1 pole plug with contact pins						
Plug with 2x 2.5 mm² contact pins (BRE-C-2.5), without coding pins.	FIC-2/1-1	1SNA166819R2300		1	27	CC-E-VA CC-E-VA-6.6 CC-E-VA-R2-6.6 CC-S-INF-VL-6.6 CC-D-VA CC-TH35-VL-6.6 CC-R-VA CC-I-VA-2
Plugs without contact pins (contact pins BRE-C..., to be ordered separately)						
Plugs 2x4 poles, long cover, with 2 coding pins (COP-FI-1) and 8 locking pins. Contacts pins (BRE-C...) to be ordered separately.	FIC-2/4-2	1SNA166936R1000		1	105	CC-E-VA CC-E-VA-6.6 CC-E-VA-R2-6.6 CC-S-INF-VL-6.6 CC-D-VA CC-TH35-VL-6.6
Plugs 2x4 poles, short cover, with 2 coding pins (COP-FI-1) and 8 locking pins. Contacts pins (BRE-C...) to be ordered separately.	FIC-2/4-1	1SNA166525R1400		1	91	CC-E-VA CC-E-VA-6.6 CC-E-VA-R2-6.6 CC-S-INF-VL-6.6 CC-D-VA CC-TH35-VL-6.6
Plug 2x4 poles, rack mounting R version, with 2 coding pins (COP-FI-1) and 8 locking pins. Contacts pins (BRE-C...) to be ordered separately.	FIC-2/4-R	1SNA166529R2000		1	80	CC-R-VA
Plug 2x4 poles, reverse mounting I version, with 2 coding pins (COP-FI-1) and 8 locking pins. Contacts pins (BRE-C...) to be ordered separately.	FIC-2/4-I	1SNA166589R2500		1	60	CC-I-VA-2
BRE contact pins						
Pin 1 mm²	BRE-C-1	1SNA167264R0700		10	2.6	–
Pin 1.5 mm²	BRE-C-1.5	1SNA167265R0000		10	2.6	–
Pin 2.5 mm²	BRE-C-2.5	1SNA167260R1700		10	3	–
Pin 4 mm²	BRE-C-4	1SNA205876R0400		10	3	–
Pin 6 mm²	BRE-C-6	1SNA168146R0200		10	3	–
Tools for contact pins						
1 Pin extraction tool	EXBR1	1SNA167008R0300		1	24	–
2 Crimping tool for BRE pins 1 to 2.5 mm² (1)	PSC	1SNA173181R1300		1	478	–
3 Locking sleeve for contact pin	DLVR	1SNA167971R2400		10	0.4	–
dia 4 mm test plugs						
4 IP20 with mobile protection	FC4-1	1SNA167927R1000		10	11	–
5 IP20 with permanent protection	FC4-5	1SNA167931R1400		10	10	–
Bayonet plugs						
6 Bayonet security test plug / Black	FCB-1	1SNA167690R0700		10	7	–
Bayonet security test plug / Red	FCB-2	1SNA167692R2500		10	7	–
7 Isolating cap for FCB plug	CA	1SNA167697R2200		10	1.2	–
Accessories						
8 Straight adaptor	IR1	1SNA167622R2600		5	15	–
9 H adaptor (short-circuit bridge)	IR2	1SNA167623R2700		5	35	–
10 Isolating cap for IR1 and IR2 adaptors	DI	1SNA167981R1700		10	7	–
11 Adaptor between FCB plug and ring-tongue test interface	IR3	1SNA167624R2000		10	6.4	–
Coding pins						
12 Plug coding pin	COP-FI-1	1SNA167378R1100		10	2.3	–

(1) Refering to 1SNC169040D1702 to find other crimping tools

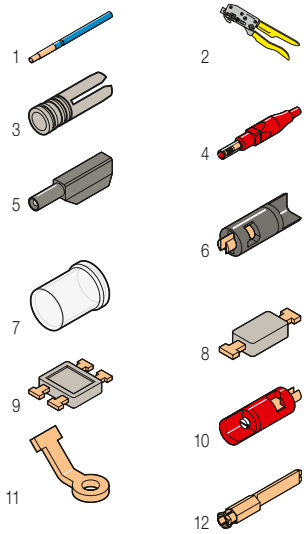

Pin installation on plugs

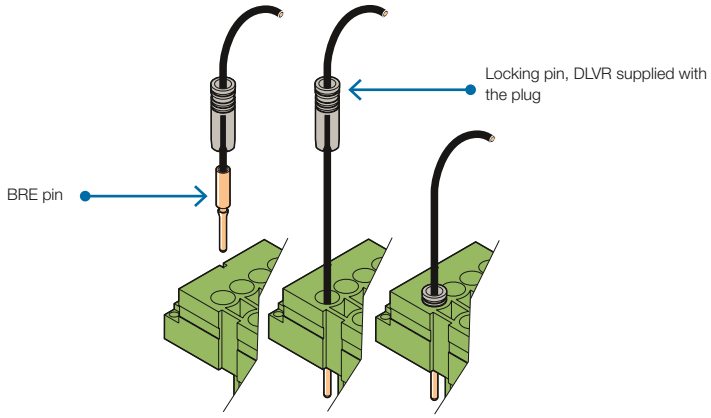

1SNC169019S0201

Make before break 30

Break before make 36

Closed contact 42

Independent circuits 48

Pre-wired plugs 49

Customized plugs 51

Simultaneous measurement and injection with 2x4 poles test plug

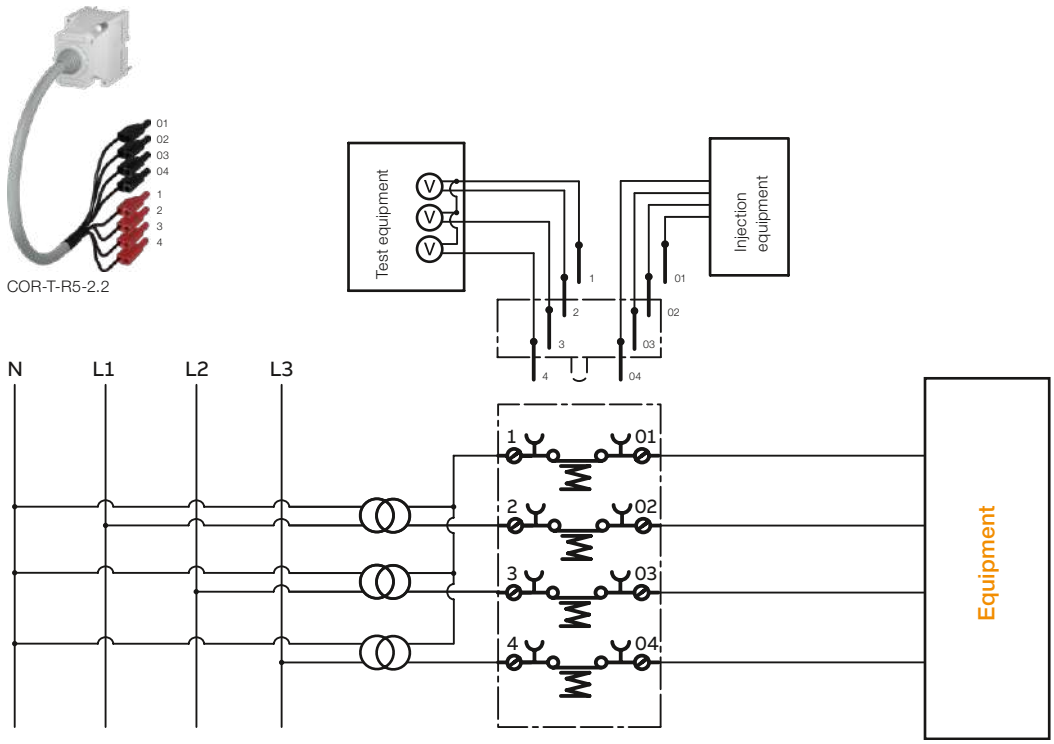

Measurement with 2x4 poles test plug

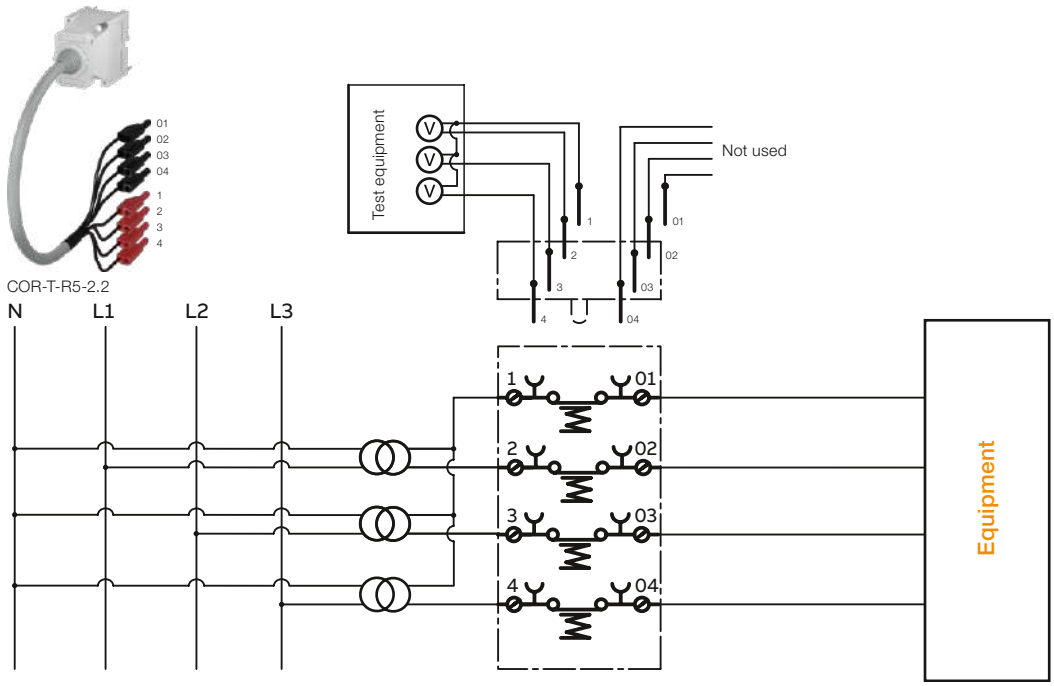

1SNC169006S0201

Injection with 2x4 poles test plug

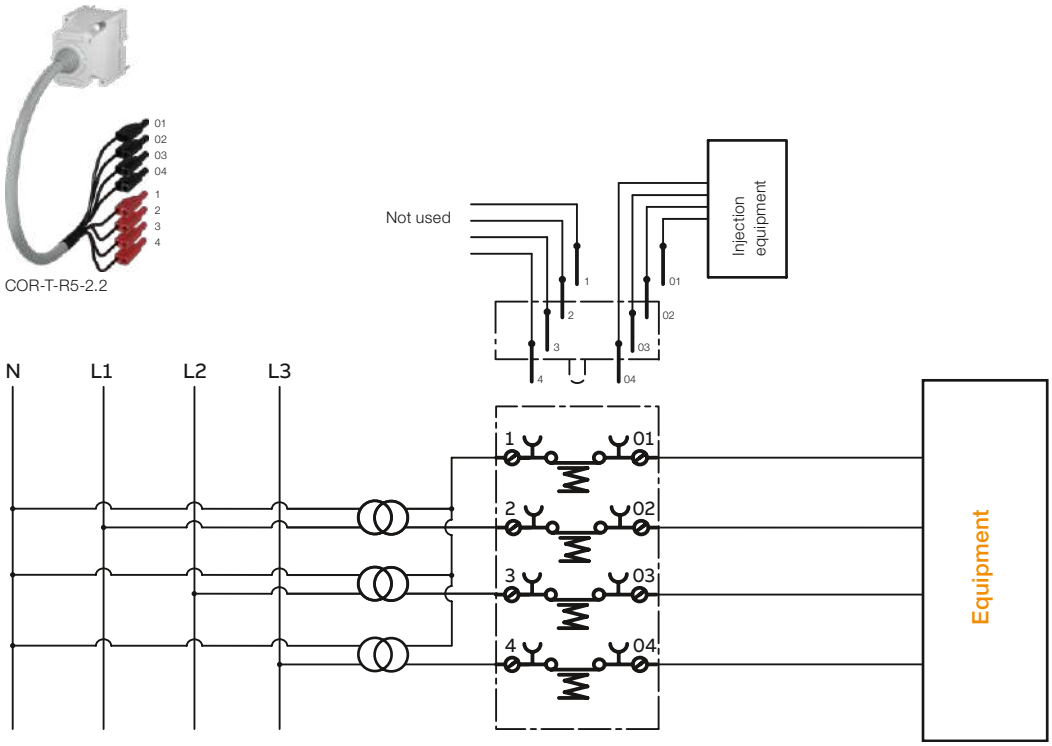

1SNC169006S0201

Voltage transformers application

Make before break test principle - With 2x4 poles test plug

Applications

- Measurement on VT's
- Injection
- Equipment replacement

1. Normal service

1.1 ESSAILEC® voltage sockets allow the simultaneous testing operations of 1 to 4 independent circuits on the same socket.

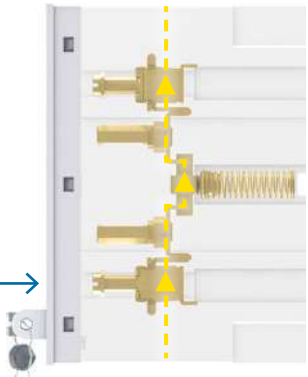

1.2 The lid is installed on the socket and can be sealed to prevent unauthorized access. **The socket circuits are closed** and signals flow from current transformers to the equipment to be tested.

2. Preparation: plug and lid

2.1 The lid **is removed.**

2.2 **Connect the ESSAILEC® test plug leads** to the test set.

5. Back to normal service

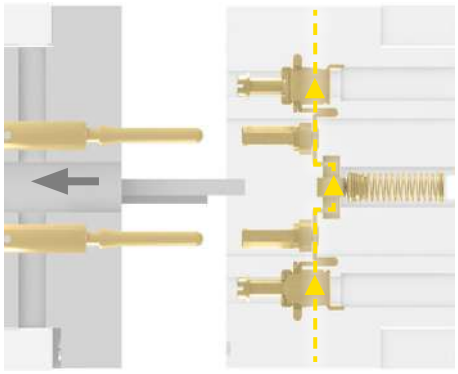

5.1 **Plug removal closes back the socket contacts** and signals flow again through the socket.

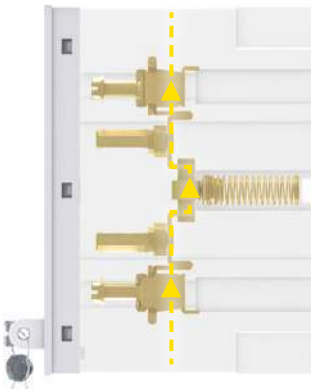

5.2 Lid is put back in place.

3. Test phase: Make

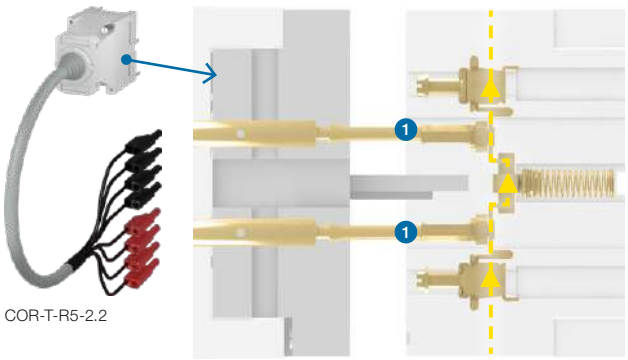

COR-T-R5-2.2

During plug insertion, plug pins make contact with socket pins (1). **Contacts remain closed and the signals flow has not changed.**

4.1 Measurement: test phase - Break

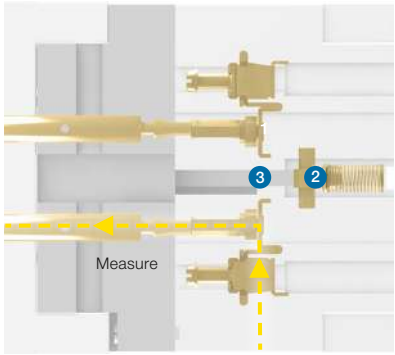

When the plug is fully inserted in the socket, inner mobile contacts (2) are pushed down by plug's plastic leads (3) and **the four circuits are opened simultaneously.** Signals are derived into the plug towards the test set. The equipment to be tested is no more energized.

4.2 Injection or equipment replacement: test phase - Break

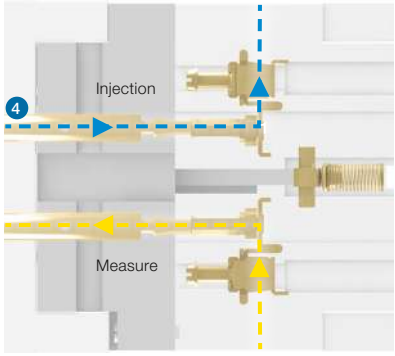

In a second step or simultaneously, **voltage injection** can be done on the protection relay side (4).

1SNC169013S0201

Voltage transformers application

ESSAILEC® sockets for voltage transformers - Make before break

TC-E-VA

Description

Short-circuited contacts for measurement, calibration and distribution applications.

Make before break principle:

- The circuit is automatically shorted with the insertion of the plug.
- The circuit closes automatically when the plug is removed.
- This system guarantees a complete safety.
- By convention grey coding is for voltage circuits and blue coding is for polarity circuits.

Main technical data

Connecting capacity		IEC 947-1
Screw clamp (VL)	Rigid: Solid/Stranded	0.2 ... 6 mm²
	Flexible with insulated ferrule	0.22 ... 4 mm²
Ring tongue (VA)	Flexible with insulated ferrule	0.34 ... 10 mm²
	Ø lug hole size	3 mm
	Width	7.5 mm
Quick-connect	Flexible with insulated ferrule	2.5
Body		Polycarbonate
Conductive parts		Silver-plated
Rated voltage		400 V
Impulse withstand voltage		4000 V
Pollution degree		3
Rated current		8 A
Short-circuit current		25 A/5 s ... 800 A/25 ms
Storage temperature range		-25 ... +70 °C
Working temperature range		-10 ... +55 °C
Protection without lid / with lid		IP20 / IP40
Coding color		Grey ☐ - Blue ☐

Mounting instructions

Rail	G32, TH 35-7.5, TH 35-15
Screw clamp	
Wire stripping length	9.5 mm 0.370 in
Tool	Flat screwdriver Ø 4 mm Ø 0.157 in
Torque	0.5 ... 0.8 Nm 4.4 ... 7.1 lb.in

Ordering details / Compatible products

Color	Type	Part Number	Pkg qty	Weight 1 pce g	Lid	Cover	Universal plug	Pre-wired plugs 2x4 poles	Pre-wired plugs 4 poles
Flush mounting									
Ring-tongue									
Grey	TC-E-VA	1SNA166747R0200	1	140	CPT-1	–	FI-2/4-DIA4	COR-T-R5-2.2	COR-T-4-4
	TC-E-VA-2-2	1SNA166627R2200	1	150	Lid + coding included				
	TC-E-VA-R2-2.2	1SNA166977R0000	50	150					
Blue	PC-E-VA	1SNA166763R0200	1	145	CPP-1			COR-P-R1-8.8	–
	PC-E-VA-8.8	1SNA166630R0100	1	200	Lid + coding included				
Quickconnect									
Grey	TC-E-C5A-2.2	1SNA166628R0300	1	170	Lid + coding included	–	FI-2/4-DIA4	COR-T-R5-2.2	COR-T-4-4
Base / Half-base mounting									
Screw clamp									
Grey	TC-DS-VL	1SNA166742R0500	1	100	CPT-1	CPT-5 (1)	FI-2/4-DIA4	COR-T-R5-2.2	COR-T-4-4 (2)
	TC-S-INF-VL-2.2	1SNA166948R0400	1	170	–	Cover + coding included			COR-T-4-4
Blue	PC-DS-VL	1SNA166758R1500	1	130	CPT-1	–		COR-P-R1-8.8	–
Ring-tongue									
Grey	TC-D-VA	1SNA166748R1300	1	147	CPP-1	–	FI-2/4-DIA4	COR-T-R5-2.2	COR-T-4-4 (2)
Blue	PC-D-VA	1SNA166764R0300	1	115				COR-P-R1-8.8	–
TH35 rail mounting									
Screw clamp									
Grey	TC-TH35-VL	1SNA166964R0000	1	114	CPT-1	CPT-5	FI-2/4-DIA4	COR-T-R5-2.2	COR-T-4-4

(1) Compatible only in base mounting option.
(2) Compatible with some restrictions, please contact us.
Information on pre-wired plugs: Please refer to page "ESSAILEC® pre-wired plugs for voltage transformers".

1SNC169020S0201

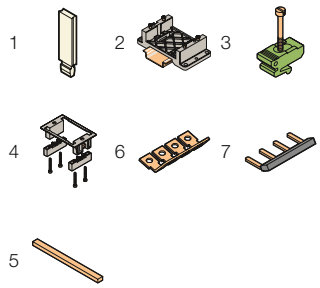

Accessories

	Description		Type	Part Number		Pkg qty	Weight 1 pce g
1	Interlocking peg	For 2 sockets assembly	CVABM	1SNA183436R0500		10	0.4
2	Mounting kits	For TH35 rail (a)	KEM-3	1SNA166962R0000		10	24
3		For DIN 1 rail (a)	FX	1SNA167682R2300		10	20
4		For ring-tongue flush mounting (b)	KEM-1	1SNA166928R2000		50	18
6	Lateral jumper bars	Compatible with ring-tongue connection only (VA) (b)	PCVA	1SNA167496R1100		10	1
7		Compatible with screw connection only (VL); IP20 (c)	PCVL	1SNA167681R2200		10	1
5	Jumper bars	For two sockets screw connection type (c)	BJ-VL	1SNA167680R0500		10	1

(a) compatible with base mounting only.
(b) compatible with ring-tongue connection type socket only (VA).
(c) compatible with screw connection type socket only (VL).

Compatible products

Lid
CPC-1

Cover
CPC-7

Universal plug
FI-2/4-DIA4

Plug 2x4 poles
COR-T-R5-2.2

Plug 4 poles
COR-T-4-4
Design for insertion 01-02-03-04

Connection technologies

Ring-tongue

Screw clamp

Quick-connect

1SNC169020S0201

Simultaneous measurement and injection with 2x4 poles test plug

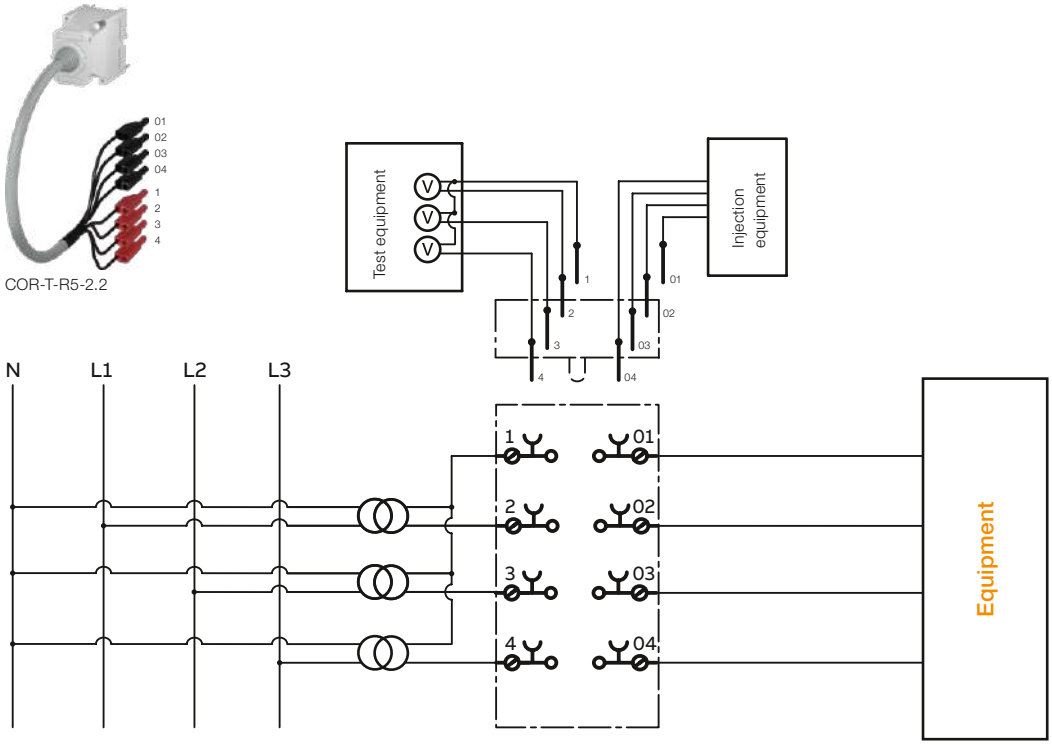

1SNC169007S0201

Measurement or/and injection with 4 poles test plugs

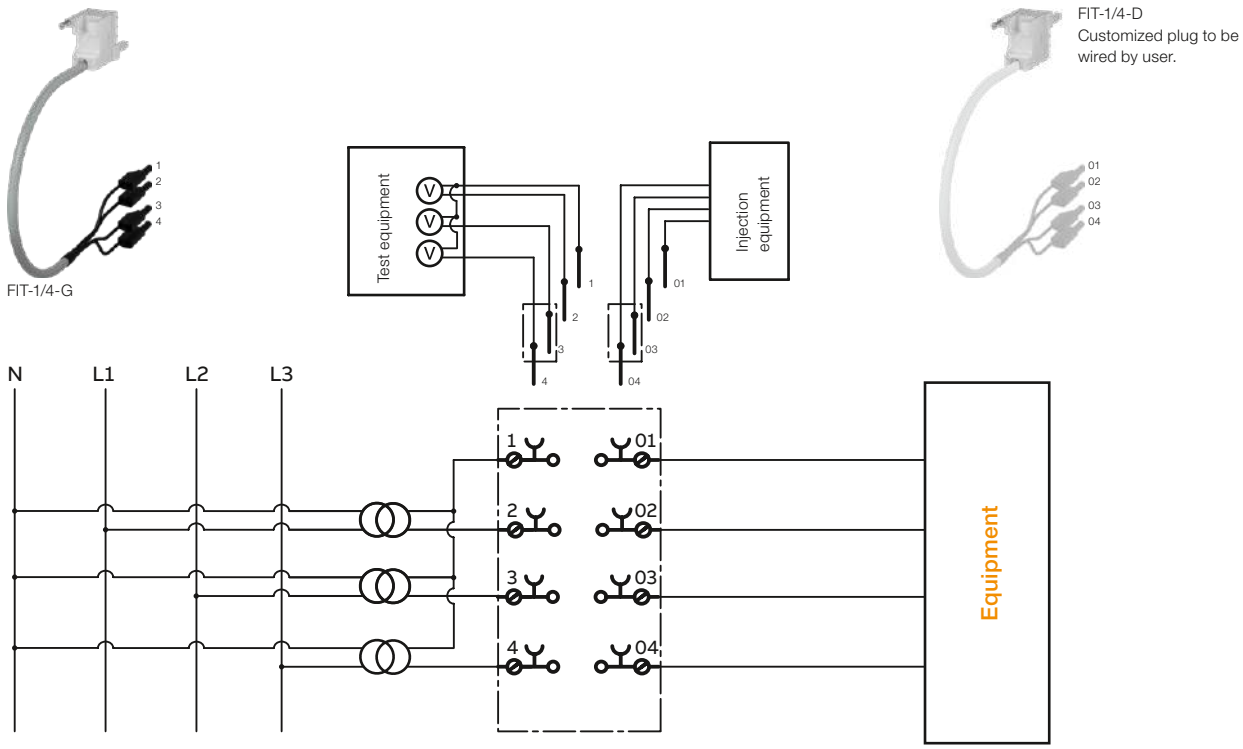

1SNC169007S0201

Voltage transformers application
Break before make test principle - With 2x4 or 4 poles test plug

Applications
- Measurement on VT's
- Injection
- Equipment replacement

1. Normal service

1.1 ESSAILEC® voltage sockets allow the simultaneous testing operations of 1 to 4 independent circuits on the same socket.

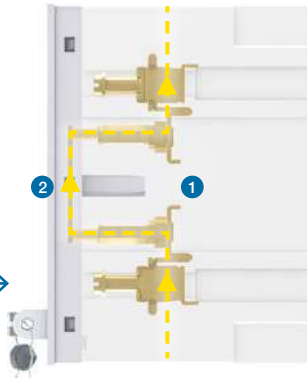

1.2 The lid is installed on the socket and can be sealed to prevent unauthorized access. **The socket has no mobile contacts (closed style) (1)**. Circuit continuity is ensured by the lid equipped with built- in contact pins (2).

2. Preparation: plug

Connect the ESSAILEC® test plug leads to the test set.

5. Back to normal service

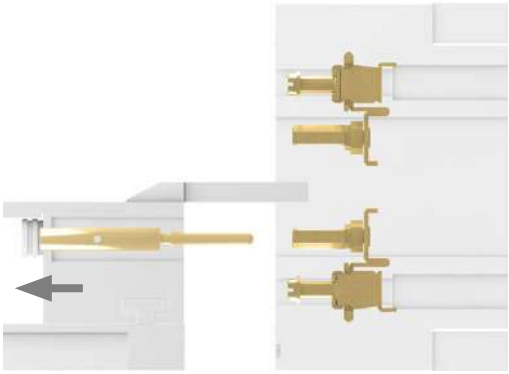

5.1 When the plug is removed, **signals are disconnected.**

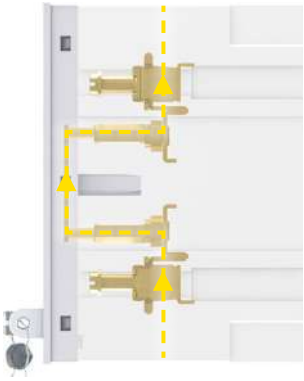

5.2 When lid is put back in place, **signals flow again through the socket.**

3. Test phase: Break

Removing of the lid **opens the circuit.**
The device to be tested is then isolated from the power supply (VT) and is no longer energized.

4. Simultaneous measurement and injection
Test phase: Make with 2x4 poles test plugs

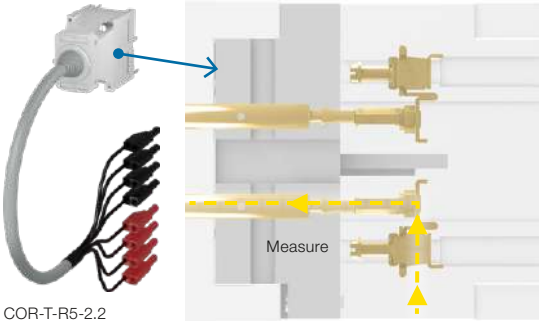

COR-T-R5-2.2

4.1 The plug is fully inserted in the socket, **the signals are derived** into the plug towards the test set.

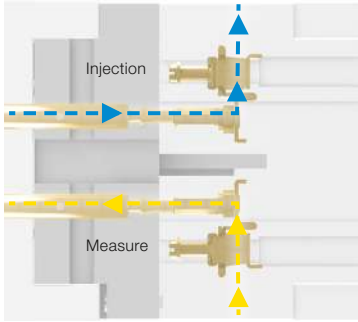

4.2 While the plug is still in place **simultaneous injection** can be realized on the equipment.

OR

4. Separated measurement and injection
Test phase: Make with 4 poles test plugs

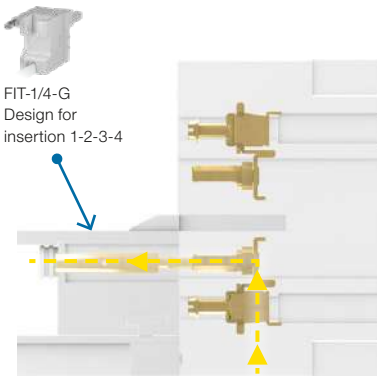

FIT-1/4-G
Design for
insertion 1-2-3-4

4.1 The plug is fully inserted in the socket, **the signals are derived** into the plug towards the test set.

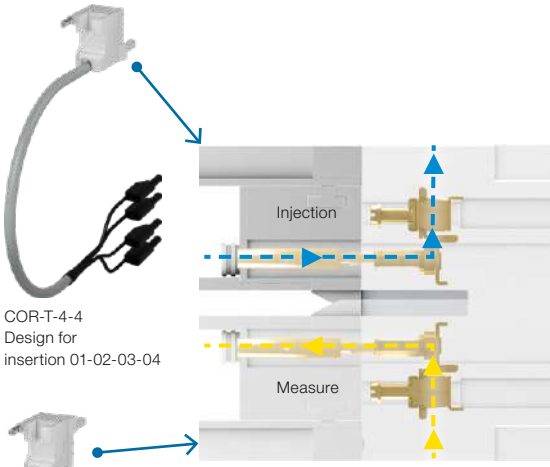

COR-T-4-4
Design for
insertion 01-02-03-04

FIT-1/4-G
Design for
insertion 1-2-3-4

4.2 While the plug is still in place, a second plug can be installed for **injection** on the equipment.

4

1SNC169014S0201

Voltage transformers application

ESSAILEC® sockets for voltage transformers - Break before make

x4

TO-E-VA

Description

Opened type contacts for measurement and calibration applications.

Break before make principle:

- The connection is made thanks to the lid: the removing of the lid opens the circuit. So the device is isolated from power supply to be tested.
- The circuit is closed only when the lid is reinstalled.
- By convention, grey coding is for voltage circuits blue coding is for polarity circuits and orange coding is for trip circuits.

Main technical data

Connecting capacity		IEC 947-1
Screw clamp (VL)	Rigid: Solid/Stranded	0.2 ... 6 mm²
	Flexible with insulated ferrule	0.22 ... 4 mm²
Ring tongue (VA)	Flexible with insulated ferrule	0.34 ... 10 mm²
	Ø lug hole size	3 mm
	Width	7.5 mm
Body		Polycarbonate
Conductive parts		Silver-plated
Rated voltage		400 V
Impulse withstand voltage		4000 V
Pollution degree		3
Rated current		8 A
Short-circuit current		25 A/5 s ... 800 A/25 ms
Storage temperature range		-25 ... +70 °C
Working temperature range		-10 ... +55 °C
Protection without lid / with lid		IP20 / IP40
Coding color		Grey - Blue - Orange

Mounting instructions

Rail	G32, TH 35-7.5, TH 35-15
Screw clamp	
Wire stripping length	9.5 mm 0.370 in
Tool	Flat screwdriver Ø 4 mm Ø 0.157 in
Torque	0.5 ... 0.8 Nm 4.4 ... 7.1 lb.in

Ordering details / Compatible products

Color	Type	Part Number		Pkg qty	Weight 1 pce g	Lid	Cover	Universal plug	Pre-wired plugs 2x4 poles	Pre-wired plugs 4 poles
Flush mounting										
Ring-tongue										
Grey	TO-E-VA	1SNA166743R0600		1	170	CPT-2	–	FI-2/4-DIA4	COR-T-R5-2.2 (1)	COR-T-4-4
	TO-E-VA-12.12	1SNA166925R1500		1	200	Lid + coding included			FIT-2/4-2 (3)	
Blue	PO-E-VA	1SNA166759R1600		1	170	CPP-2			COR-P-R1-8.8 (1)	–
Orange	DEO-E-VA	1SNA166878R0600		1	170	CPDE-2			FIDE-2/4 (3)	
Base / Half-base mounting										
Screw clamp										
Grey	TO-DS-VL	1SNA166741R0400		1	100	CPT-2	CPT-4 (2)	FI-2/4-DIA4	COR-T-R5-2.2 (1)	COR-T-4-4
	TO-S-INF-VL-12.12	1SNA166723R2200		1	200	–	Cover + coding included	–	FIT-2/4-2 (3)	–
Blue	PO-DS-VL	1SNA166757R0400		1	117	CPP-2	–	FI-2/4-DIA4	COR-P-R1-8.8 (1)	
Ring-tongue										
Grey	TO-D-VA	1SNA166744R0700		1	139	CPT-2	–	FI-2/4-DIA4	COR-T-R5-2.2 (1)	COR-T-4-4
Blue	PO-D-VA	1SNA166760R1300		1	170	CPP-2			COR-P-R1-8.8 (1)	–
Orange	DEO-D-VA	1SNA166874R2200		1	140	CPDE-2			FIDE-2/4 (3)	
Reverse mounting										
Ring-tongue										
Grey	TO-I-VA-2	1SNA166945R2100		1	190	CPT-2	–	FIT-2/4-I	FIT-2/4-I (3)	–

(1) Compatible with some restrictions.
(2) Compatible in base mounting only.
(3) Plug to be mounted / see customized plugs page.
Information on pre-wired plugs: Please refer to page "ESSAILEC® pre-wired plugs for voltage transformers".

1SNC169021S0201

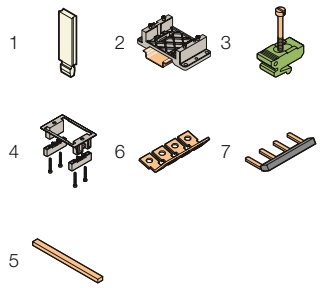

Accessories

	Description		Type	Part Number		Pkg qty	Weight 1 pce g
1	Interlocking peg	For 2 sockets assembly	CVABM	1SNA183436R0500		10	0.4
2	Mounting kits	For TH35 rail (a)	KEM-3	1SNA166962R0000		10	24
3		For DIN 1 rail (a)	FX	1SNA167682R2300		10	20
4		For ring-tongue flush mounting (b)	KEM-1	1SNA166928R2000		50	18
6	Lateral jumper bars	Compatible with ring-tongue connection only (VA) (b)	PCVA	1SNA167496R1100		10	1
7		Compatible with screw connection only (VL); IP20 (c)	PCVL	1SNA167681R2200		10	1
5	Jumper bars	For two sockets screw connection type (c)	BJ-VL	1SNA167680R0500		10	1

(a) compatible with base mounting only.
(b) compatible with ring-tongue connection type socket only (VA).
(c) compatible with screw connection type socket only (VL).

Compatible products

Lid
CPC-1

Cover
CPC-7

Universal plug
FI-2/4-DIA4

Plug 2x4 poles
COR-T-R5-2.2

Plug 4 poles
COR-T-4-4
Design for insertion 01-02-03-04

Connection technologies

Ring-tongue

Screw clamp

1SNC169021S0201

Voltage transformers application

Closed contact test principle - Measurement with 4 poles test plug

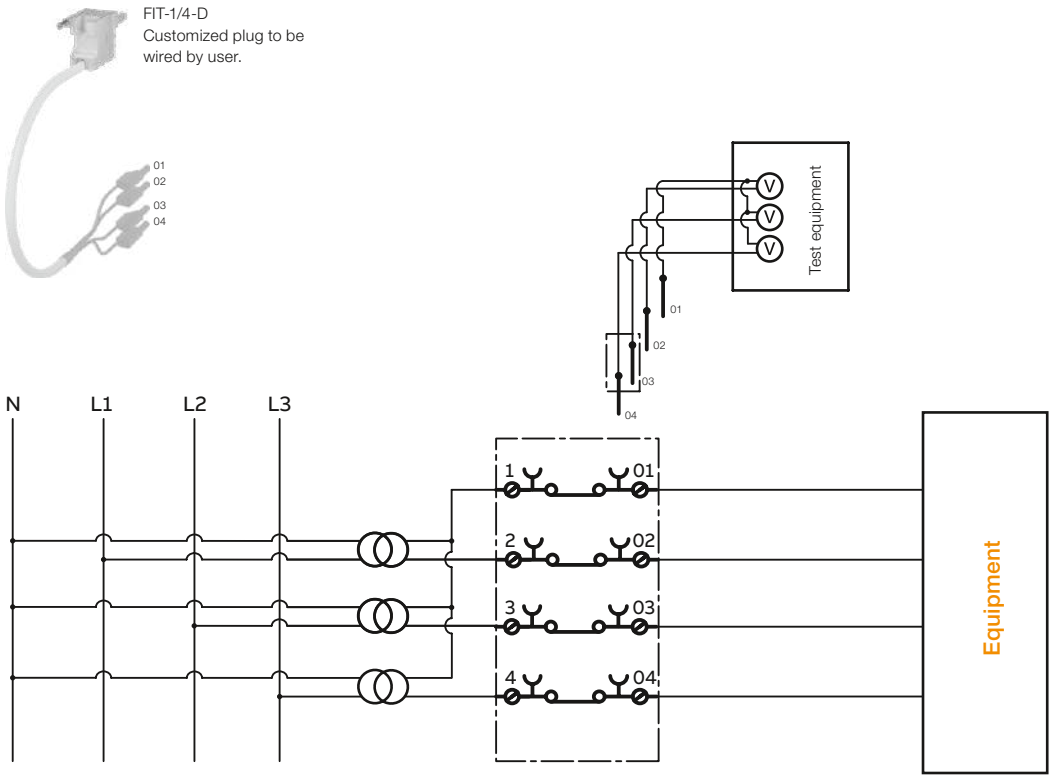

1SNC169008S0201

Applications

- Measurement on VT's

1. Normal service

1.1 ESSAILEC® voltage sockets allow the simultaneous testing operations of 1 to 4 independent circuits on the same socket.

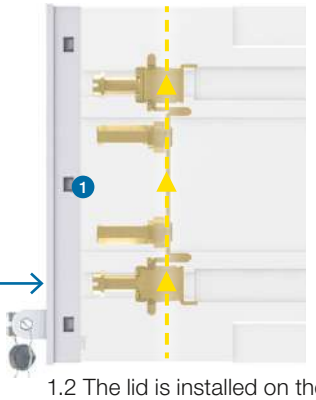

1.2 The lid is installed on the socket and can be sealed to prevent unauthorized access.
The socket has no mobile contacts (closed style) (1).
Circuit continuity is permanent, no possibility of disconnection.

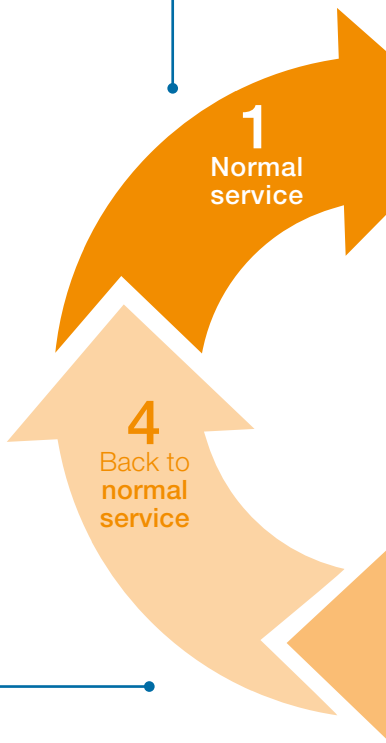

4. Back to normal service

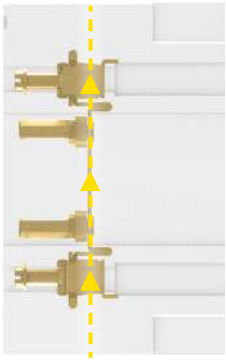

4.1 The plug is removed, and lid is put back in place, signals **never stop to flow through the socket.**

4.2 The lid is put back in place.

2. Preparation: plug and lid

2.1 The lid **is removed.**

2.2 **Connect the ESSAILEC® test plug leads** to the test set.

3. Test phase: Make & Measure

COR-T-4-4
Design for insertion 01-02-03-04

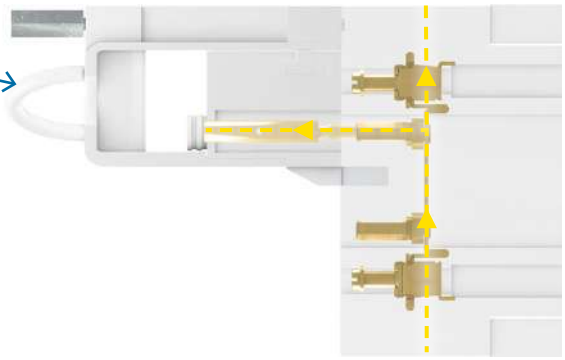

The plug is fully inserted in the socket, **the signals are derived** into the plug towards the test set.

1SNC169015S0201

Voltage transformers application

ESSAILEC® sockets for voltage transformers – closed contact

TF-E-VA

Description

Closed contact principle:

- The electrical connection is continuous. The circuit still closed during the testing operation.
- Closed contacts for measurement and distribution applications.
- By convention, grey coding is for voltage circuits blue coding is for polarity circuits and orange coding is for trip circuits.

Main technical data

Connecting capacity		IEC 947-1
Screw clamp (VL)	Rigid: Solid/Stranded	0.2 ... 6 mm²
	Flexible with insulated ferrule	0.22 ... 4 mm²
Ring tongue (VA)	Flexible with insulated ferrule	0.34 ... 10 mm²
	Ø lug hole size	3 mm
	Width	7.5 mm
Body		Polycarbonate
Conductive parts		Silver-plated
Rated voltage		400 V
Impulse withstand voltage		4000 V
Pollution degree		3
Rated current		8 A
Short-circuit current		25 A/5 s ... 800 A/25 ms
Storage temperature range		-25 ... +70 °C
Working temperature range		-10 ... +55 °C
Protection without lid / with lid		IP20 / IP40
Coding color		Grey ☐ - Blue ☐ - Orange ☐

Mounting instructions

Rail	G32, TH 35-7.5, TH 35-15
Screw clamp	
Wire stripping length	9.5 mm 0.370 in
Tool	Flat screwdriver Ø 4 mm Ø 0.157 in
Torque	0.5 ... 0.8 Nm 4.4 ... 7.1 lb.in

Ordering details / Compatible products

Color	Type	Part Number	Pkg qty	Weight 1 pce g	Lid	Cover	Universal plug	Pre-wired plugs 2x4 poles	Pre-wired plugs 4 poles
Flush mounting									
Ring-tongue									
Grey	TF-E-VA	1SNA166745R0000	1	170	CPT-1	–	–	–	COR-T-4-4
Blue	PF-E-VA	1SNA166761R0000	1	170	CPP-1				FIP-1/4-D (1) FIP-1/4-G (1)
Base / Half-base mounting									
Screw clamp									
Grey	TF-DS-VL	1SNA166503R2700	1	120	CPT-1	CPT-5 (2)	–	–	COR-T-4-4
Blue	PF-DS-VL	1SNA166506R2200	1	117	CPP-1	–			FIP-1/4-D (1) FIP-1/4-G (1)
Ring-tongue									
Grey	TF-D-VA	1SNA166746R0100	1	119	CPT-1	–	–	–	COR-T-4-4
Blue	PF-D-VA	1SNA166762R0100	1	140	CPP-1				FIP-1/4-D (1)
Orange	DEF-D-VA	1SNA166896R1100	1	140	CPDE-1				FIP-1/4-G (1)

(1) Plug to be mounted / see customized plugs page.
(2) Compatible in base mounting only.
Information on pre-wired plugs: Please refer to page "ESSAILEC® pre-wired plugs for voltage transformers".

1SNC169023S0201

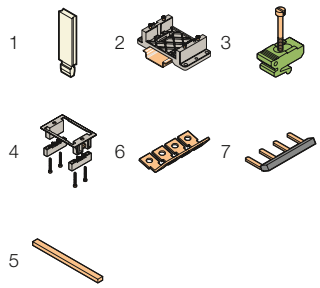

Accessories

	Description		Type	Part Number		Pkg qty	Weight 1 pce g
1	Interlocking peg	For 2 sockets assembly	CVABM	1SNA183436R0500		10	0.4
2	Mounting kits	For TH35 rail (a)	KEM-3	1SNA166962R0000		10	24
3		For DIN 1 rail (a)	FX	1SNA167682R2300		10	20
4		For ring-tongue flush mounting (b)	KEM-1	1SNA166928R2000		50	18
6	Lateral jumper bars	Compatible with ring-tongue connection only (VA) (b)	PCVA	1SNA167496R1100		10	1
7		Compatible with screw connection only (VL); IP20 (c)	PCVL	1SNA167681R2200		10	1
5	Jumper bars	For two sockets screw connection type (c)	BJ-VL	1SNA167680R0500		10	1

(a) compatible with base mounting only.
(b) compatible with ring-tongue connection type socket only (VA).
(c) compatible with screw connection type socket only (VL).

Compatible products

Lid
CPC-1

Cover
CPC-7

Plug 4 poles
COR-T-4-4
Design for insertion 01-02-03-04

Connection technologies

Ring-tongue

Screw clamp

1SNC169023S0201

Voltage transformers application

ESSAILEC® sockets for voltage transformers – independent circuits

TT4-S-VL-INF

Description

Four independent circuits for voltage measurement.

Test directly performed on the four built-in dia. 4mm test sockets (no plug required).

Test sockets color coding :

- U1- brown,
- U2-black,
- U3-red,
- U4-blue.

The socket is supplied with a compact cover and sealing option (no coding required).

Main technical data

Connecting capacity		IEC 947-1
Screw clamp (VL)	Rigid: Solid/Stranded	0.2 ... 6 mm²
	Flexible with insulated ferrule	0.22 ... 4 mm²
	Flexible with non insulated ferrule	0.22 ... 4 mm²
Body		Polycarbonate
Conductive parts		Silver-plated
Rated voltage		400 V
Impulse withstand voltage		4000 V
Pollution degree		3
Rated current		8 A
Short-circuit current		25 A/5 s ... 800 A/25 ms
Storage temperature range		-25 ... +70 °C
Working temperature range		10 ... +55 °C
Protection without cover/ lid		IP20

Mounting instructions

Rail	TH 35-7.5, TH 35-15
Wire stripping length	9.5 mm 0.370 in
Tool	Flat screwdriver Ø 4 mm Ø 0.157 in
Torque	0.5 ... 0.8 Nm 4.4 ... 7.1 lb.in

Ordering details

Color	Type	Part Number		Pkg qty	Weight 1 pce g
Base / Half-base mounting					
Grey	TT4-S-VL-INF	1SNA166972R0000		40	114

Compatible products

Lid / Cover	Cover
Included	included

Information on pre-wired plugs: Please refer to page "ESSAILEC® pre-wired plugs for voltage transformers".

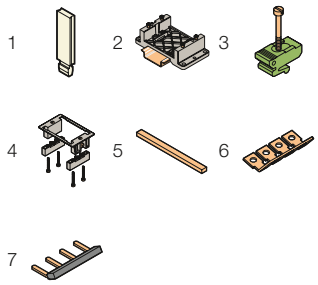

Accessories

	Description		Type	Part Number		Pkg qty	Weight 1 pce g
1	Interlocking peg	For 2 sockets assembly	CVABM	1SNA183436R0500		10	0.4
2	Mounting kits	For TH35 rail (a)	KEM-3	1SNA166962R0000		10	24
3		For DIN 1 rail (a)	FX	1SNA167682R2300		10	20
4		For ring-tongue flush mounting (b)	KEM-1	1SNA166928R2000		50	18
5	Jumper bars	For two sockets screw connection type (c)	BJ-VL	1SNA167680R0500		10	1
6	Lateral jumper bars	Compatible with ring-tongue connection only (VA) (b)	PCVA	1SNA167496R1100		10	1
7		Compatible with screw connection only (VL); IP20 (c)	PCVL	1SNA167681R2200		10	1

(a) compatible with base mounting only.
(b) compatible with ring-tongue connection type socket only (VA).
(c) compatible with screw connection type socket only (VL).

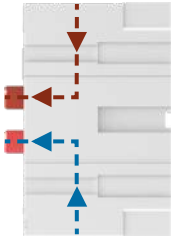

Side view left

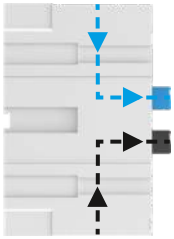

Side view right

1SNC169024S0201

Description

- Standard voltage plugs are compatible with ESSAILEC® voltage sockets.
- Plugs are ready to use with contact pins (BRE...) , coding, cables and test plugs assembled to ease your test operations.

Main technical data

Connecting capacity	IEC 947-1
Body	Polycarbonate
Conductive parts	Silver-plated
Rated voltage	400 V
Impulse withstand voltage	4000 V
Pollution degree	3
Rated current	15 A
Short-circuit current	25 A/5 s ... 800 A/25 ms
Storage temperature range	-25 ... +70 °C
Working temperature range	-10 ... +55 °C

Ordering details

Description	Type	Part Number		Pkg qty	Weight 1 pce g	Compatible products Socket
Universal plugs						
Plug 2x4 pins, with direct insertion Ø 4 mm test plug	FI-2/4-DIA4	1SNA167936R1100		1	62	TC-E-VA TC-E-VA-2.2 TC-E-VA-R2-2.2 TC-DS-VL TC-S-INF-VL-2.2 TC-D-VA TC-TH35-VL TC-E-C5A-2.2 TO-E-VA TO-E-VA-12.12 TO-DS-VL TO-S-INF-VL-12.12 TO-D-VA PC-E-VA PC-E-VA-8.8 PC-DS-VL PC-D-VA PO-E-VA PO-DS-VL PO-D-VA DEO-E- A DEO-D-VA

Continue on next page

1SNC169025S0201

Ordering details

Description	Type	Part Number		Pkg qty	Weight 1 pce g	Compatible products Socket
Plug 2x4 poles						
1 plug 2x4 pins PRECODED 2.2 / Grey 4 x Ø 4 mm test plugs / Black 4 x Ø 4 mm test plugs / Red Conductors section: 2.5 mm² cable length: 2 m / 79"	COR-T-R5-2.2	1SNA167933R1600		1	1070	TC-E-VA TC-E-VA-2.2 TC-E-VA-R2-2.2 TC-DS-VL TC-S-INF-VL-2.2 TC-D-VA TC-TH35-VL TC-E-C5A-2.2 TO-E-VA TO-E-VA-12.12 TO-DS-VL TO-S-INF-VL-12.12 TO-D-VA
1 plug 2x4 pins PRECODED 8.8 / Blue 4 x Ø 4 mm test plugs / Black 4 x Ø 4 mm test plugs / Red Conductors section: 2.5 mm² cable length: 2 m / 79"	COR-P-R1-8.8	1SNA166978R0000		1	1080	PC-E-VA PC-E-VA-8.8 PC-DS-VL PC-D-VA PO-E-VA PO-DS-VL PO-D-VA PC-E-VA PC-E-VA-8.8 PC-DS-VL PC-D-VA PO-E-VA PO-DS-VL PO-D-VA
Plug 4 poles						
1 plug 4 pins / Grey Design for insertion 01-02-03-04 (D. design.) 4 x Ø 4 mm test plugs / Black Conductors section: 2.5 mm² cable length: 2 m / 79"	COR-T-4-4	1SNA167935R1000		1	500	TC-E-VA TC-E-VA-2.2 TC-E-VA-R2-2.2 TC-DS-VL TC-S-INF-VL-2.2 TC-D-VA TC-TH35-VL TC-E-C5A-2.2 TO-E-VA TO-E-VA-12.12 TO-DS-VL TO-S-INF-VL-12.12 TO-D-VA TF-E-VA TF-DS-VL TF-D-VA

1SNC169025S0201

Description

To create a customized ESSAILEC® plug, according to the current socket chosen:

- Select a plug,
- Add contact pins (BRE...) and coding pins (COP...) if necessary,
- Choose the test plugs required by the measurement tool.

Ordering details

Description	Color	Type	Part Number		Pkg qty	Weight 1 pce g	Compatible products Socket
1 pole plug with contact pins							
Plug 2 poles with 2.5 mm² contact pins (BRE-T-2.5), without coding pins	Grey	FIT-2/1-1	1SNA166821R1500		1	30	TC-E-VA TC-E-VA-2.2 TC-E-VA-R2-2.2 TC-DS-VL TC-S-INF-VL-2.2 TC-D-VA TC-TH35-VL TC-E-C5A-2.2 TO-E-VA TO-E-VA-12.12 TO-DS-VL TO-S-INF-VL-12.12 TO-D-VA TO-I-VA-2 PC-E-VA PC-E-VA-8.8 PC-DS-VL PC-D-VA PO-E-VA PO-DS-VL PO-D-VA DEO-E- A
	Red	FIT-2/1-2	1SNA166644R0300		1	30	
Plugs without contact pins (contact pins BRE..., to be ordered separately)							
2x4 poles							
Plugs 2x4 poles, long cover, with 2 coding pins (COP-FI-1) and 8 locking pin. Contacts pins (BRE-T...) to be ordered separately.	Grey	FIT-2/4-2	1SNA166937R1100		1	105	TC-E-VA TC-E-VA-2.2 TC-E-VA-R2-2.2 TC-DS-VL TC-S-INF-VL-2.2 TC-D-VA TC-TH35-VL TC-E-C5A-2.2 TO-E-VA TO-E-VA-12.12 TO-DS-VL TO-S-INF-VL-12.12 TO-D-VA
	Blue	FIP-2/4-2	1SNA166939R2300		1	105	PC-E-VA PC-E-VA-8.8 PC-DS-VL PC-D-VA PO-E-VA PO-DS-VL PO-D-VA
Plug 2 poles with 2.5 mm² contact pins (BRE-T-2.5), without coding pins	Orange	FIDE-2/4-2	1SNA166943R2700		1	105	DEO-E- A DEO-D-VA

Continue on next page

4

1SNC169026S0201

Ordering details

	Description	Color	Type	Part Number		Pkg qty	Weight 1 pce g	Compatible products Socket
	Plugs 2x4 poles, short cover, with 2 coding pins (COP-FI-1) and 8 locking pins. Contacts pins (BRE-T...) to be ordered separately.	Grey	FIT-2/4-1	1SNA166550R0100		1	91	TC-E-VA TC-E-VA-2.2 TC-E-VA-R2-2.2 TC-DS-VL TC-S-INF-VL-2.2 TC-D-VA TC-TH35-VL TC-E-C5A-2.2 TO-E-VA TO-E-VA-12.12 TO-DS-VL TO-S-INF-VL-12.12 TO-D-VA
		Blue	FIP-2/4-1	1SNA166559R0600		1	91	PC-E-VA PC-E-VA-8.8 PC-DS-VL PC-D-VA PO-E-VA PO-DS-VL PO-D-VA
		Orange	FIDE-2/4	1SNA166877R2500		1	91	DEO-E- A DEO-D-VA
	Plug 4 poles - insertion 01-02-03-04, with 1 coding pin (COP-FI-1) and 4 locking pins. Contacts pins (BRE-T...) to be ordered separately.	Grey	FIT-2/4-I	1SNA166672R0700		1	60	TO-I-VA-2
	4 Poles							
	Plug 4 poles - insertion 1-2-3-4, with 1 coding pin (COP-FI-1) and 4 locking pins. Contacts pins (BRE-T...) to be ordered separately.	Grey	FIT-1/4-G	1SNA166547R2200		1	60	TC-E-VA TC-E-VA-2.2 TC-E-VA-R2-2.2 TC-DS-VL TC-S-INF-VL-2.2 TC-D-VA TC-TH35-VL TC-E-C5A-2.2 TO-E-VA TO-E-VA-12.12 TO-DS-VL TO-S-INF-VL-12.12 TO-D-VA TF-E-VA TF-DS-VL TF-D-VA
		Blue	FIP-1/4-G	1SNA166556R2300		1	60	PC-E-VA PC-E-VA-8.8 PC-DS-VL PC-D-VA PO-E-VA PO-DS-VL PO-D-VA PF-E-VA PF-DS-VL PF-D-VA
		Orange	FIDE-1/4-G	1SNA166898R2300		1	40	DEO-D-VA DEF-D-VA DEO-E-VA

Continue on next page

1SNC169026S0201

Ordering details

Description	Color	Type	Part Number		Pkg qty	Weight 1 pce g	Compatible products Socket
Plug 4 poles - insertion 01-02-03-04, with 1 coding pin (COP-FI-1) and 4 locking pins. Contacts pins (BRE-T...) to be ordered separately.	Grey	FIT-1/4-D	1SNA166546R2100		1	60	TC-E-VA TC-E-VA-2.2 TC-E-VA-R2-2.2 TC-DS-VL TC-S-INF-VL-2.2 TC-D-VA TC-TH35-VL TC-E-C5A-2.2 TO-E-VA TO-E-VA-12.12 TO-DS-VL TO-S-INF-VL-12.12 TO-D-VA TF-E-VA TF-DS-VL TF-D-VA
	Blue	FIP-1/4-D	1SNA166555R2200		1	60	PC-E-VA PC-E-VA-8.8 PC-DS-VL PC-D-VA PO-E-VA PO-DS-VL PO-D-VA PF-E-VA PF-DS-VL PF-D-VA
	Orange	FIDE-1/4-D	1SNA166897R1200		1	40	DEO-D-VA DEF-D-VA DEO-E-VA

1SNC169026S0201

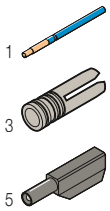

Accessories

	Description	Type	Part Number		Pkg qty	Weight 1 pce g	Compatible products Socket
BRE contact pins							
	Pin 0.34 mm²	BRE-T-0.34	1SNA168160R1400		50	2	–
	Pin 0.75 mm²	BRE-T-0.75	1SNA167779R1300		50	2.9	–
	Pin 1 mm²	BRE-T-1	1SNA164921R1700		50	3	–
	Pin 1.5 mm²	BRE-T-1.5	1SNA164922R1000		50	2.6	–
	Pin 2.5 mm²	BRE-T-2.5	1SNA164923R1100		50	2	–
	Pin 4 mm²	BRE-T-4	1SNA166980R0000		100	3	–
	Pin 6 mm²	BRE-T-6	1SNA168147R0300		50	3	–
Tools for contact pins							
1	Pin extraction tool	EXBR1	1SNA167008R0300		1	24	–
2	Crimping tool for BRE pins 1 to 2.5 mm² (1)	PSC	1SNA173181R1300		1	478	–
3	Locking sleeve for contact pin	DLVR	1SNA167971R2400		10	0.4	–
Dia 4 mm test plugs							
4	IP20 with mobile protection	FC4-1	1SNA167927R1000		10	11	–
5	IP20 with permanent protection	FC4-5	1SNA167931R1400		10	10	–
Coding pins							
6	Plug coding pin	COP-FI-1	1SNA167378R1100		10	2.3	–

(1) Refering to 1SNC169040D1702 to find other crimping tools

Pin installation on plugs

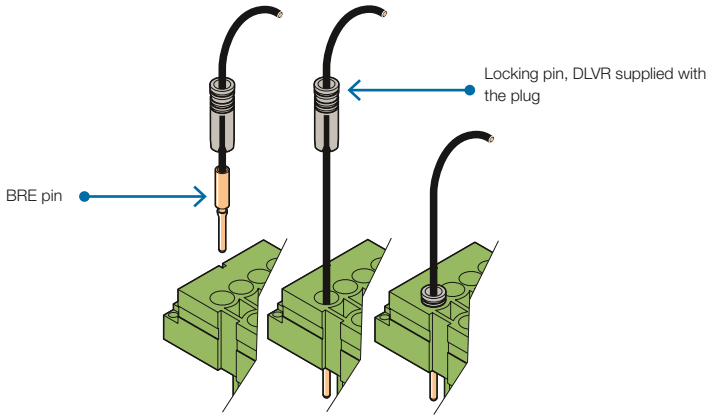

1SNC169026S0201

Description

During normal operation, lids and covers ensure protection of the test sockets from dust and unauthorized use.

According to the mounting choice, two options available:

- a lid for all types of mounting
- a cover required for base mounting ("S/DS" mounting coding)

In the case of opened contacts sockets, electrical continuity covers or lids are required. The electrical continuity is provided thanks to inner pins and linking bar.

Main technical data

Protection with cover / lid	IP40

Ordering details

Description	Color	Type	Part Number		Pkg qty	Weight 1 pce g
Lid						
Protecting lid for current sockets	Green	CPC-1	1SNA166578R0100		1	30
Protecting lid for voltage sockets	Grey	CPT-1	1SNA166646R0500		1	30
Protecting lid for trip sockets	Blue	CPP-1	1SNA166647R0600		1	30
Protecting lid for polarity sockets	Orange	CPDE-1	1SNA166876R2400		1	30
Lid for RJ45 socket (spare part)	Grey	CPT-RJ45	1SNA167002R0000		1	25.4
Lid with electrical continuity						
Protecting lid for voltage sockets	Grey	CPT-2	1SNA166577R2000		1	40
Protecting lid for polarity sockets	Blue	CPP-2	1SNA166645R0400		1	40
Protecting lid for trip sockets	Orange	CPDE-2	1SNA166926R1600		1	40
Cover						
Protecting cover for current sockets	Green	CPC-7 (1)	1SNA166734R2500		1	66
Protecting cover for voltage sockets	Grey	CPT-5	1SNA166930R2600		1	66
Cover with electrical continuity						
Protecting cover for voltage sockets	Grey	CPT-4	1SNA166733R2400		1	78

(1) CPC-7 is compatible with CC-S-INF-VL-6.6 sockets.

1SNC169027S0201

ESSAILEC® multicircuits
Range 10, 20 points

M10-D-C5A

Description

- Designed for high density wiring inside panels.
- Alternative to large terminal strips.
- Allows easy circuits disconnection without wiring modification.

Multi-circuit blocks can be mounted side by side for compact panel board wiring in replacement of large terminal strip.

Main technical data

Connecting capacity		IEC 947-1
Socket	Quick connect (C5A)	0.5 ... 0.8 Nm
	Flexible with insulated ferrule	2.5 mm²
Plug		Pin BRE
Body		Polycarbonate
Conductive parts		Silver-plated
Rated voltage		400 V
Impulse withstand voltage		4000 V
Pollution degree		3
Rated current		8 A
Short-circuit current		25 A/5 s ... 800 A/25 ms
Storage temperature range		-25 ... +70 °C
Working temperature range		-10 ... +55 °C
Protection without cover/ lid		IP20 / IP40

Mounting instructions

Wire stripping length		9.5 mm 0.370 in

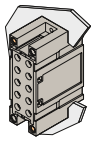
M10-D-C5A

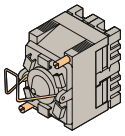
M20-I-C5A

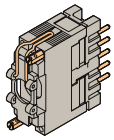
FIM10-1

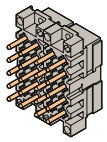
FIM20-I

Ordering details

Compatible products

Color	Type	Part Number		Pkg qty	Weight 1 pce g	Plug	Socket
Sockets							
Half-base mounting							
Grey	M10-D-C5A	1SNA166513R1000		10	60	FIM10-1	–
Extension mounting							
Grey	M10-P-C5A	1SNA166772R0300		10	66	–	–
Rack mounting							
Grey	M10-R-C5A	1SNA166566R2500		10	60	FIM10-R	–
Reverse mounting							
Grey	M10-I-C5A-1	1SNA166774R0500		10	100	FIM10-I-1	–
	M20-I-C5A	1SNA166777R0000		1	190	FIM20-I	–
Plugs							
Grey	FIM10-1	1SNA166516R1300		10	55	–	M10-D-C5A
	FIM10-R	1SNA166573R2400		1	54	–	M10-R-C5A
	FIM10-I-1	1SNA166574R2500		1	30	–	M10-I-C5A-1
	FIM20-I	1SNA166576R2700		1	53	–	M20-I-C5A

The various accessories necessary for each mounting option are supplied with the socket as well as the 2 coding pins COP-E-1 (see coding section).
The BRT contacts pins are to be ordered separately.

Accessories

1

2

3

4

	Description	Type	Part Number		Pkg qty	Weight 1 pce g
For sockets						
1	For 2 sockets assembly	CVABM	1SNA183436R0500		10	0.4
For plugs						
2	Pin 0.34 mm²	BRE-T-0.34	1SNA168160R1400		50	2
	Pin 0.75 mm²	BRE-T-0.75	1SNA167779R1300		50	2.9
	Pin 1 mm²	BRE-T-1	1SNA164921R1700		50	3
	Pin 1.5 mm²	BRE-T-1.5	1SNA164922R1000		50	2.6
	Pin 2.5 mm²	BRE-T-2.5	1SNA164923R1100		50	2
	Pin 6 mm²	BRE-T-6	1SNA168147R0300		50	3
3	Pin extraction tool	EXBR1	1SNA167008R0300		1	24
4	Crimping tool for BRE pins 1 to 2.5 mm² (1)	PSC	1SNA173181R1300		1	478

(1) Refering to 1SNC169040D1702 to find other crimping tools

1SNC169028S0201

Mounting instructions

Mounting instructions for coding 58

Outer dimensions, mounting instructions 60

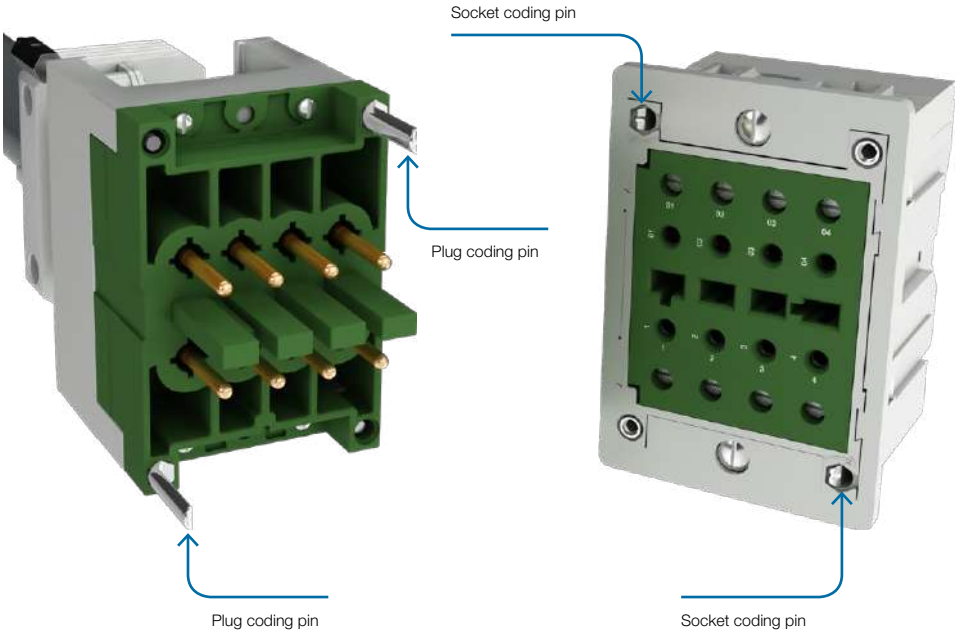

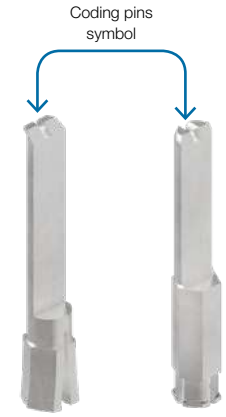

Socket coding

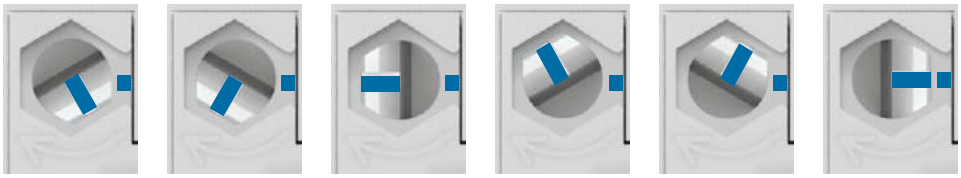

2 4 6 8 10 12

Plug coding

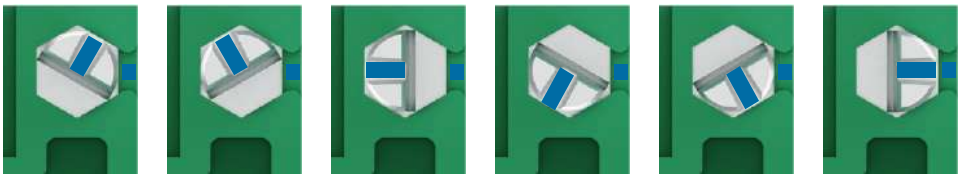

2 4 6 8 10 12

These numbers correspond to the coding information
For instance:
CC-E-VA-6.6 corresponds to COR-C-R4-6.6
TC-E-VA-2.2 corresponds to COR-T-R5-2.2

Ordering details

Description	Type	Part Number	Pkg qty	Weight kg
Socket coding pin	COP-E-1	1SNA167379R1200	10	2.3
Plug coding pin	COP-FI-1	1SNA167378R1100	10	2.3

1SNC169029S0201

How to insert the coding pins?

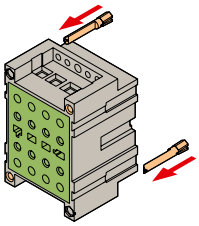

Step 1 - Socket
Choose a coding code for the socket. Then, insert the coding pin (COP-E-1) from below into the socket.

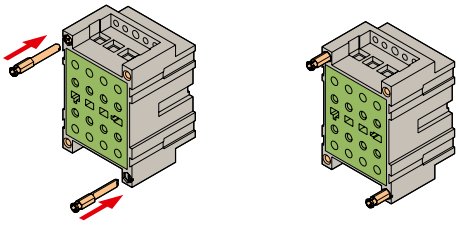

Step 2 - Plug
In order to guarantee a perfect compatibility between the socket coding and the plug coding, you have to:
1. Insert the coding pin for the plug (COP-FI-1) inside the socket.

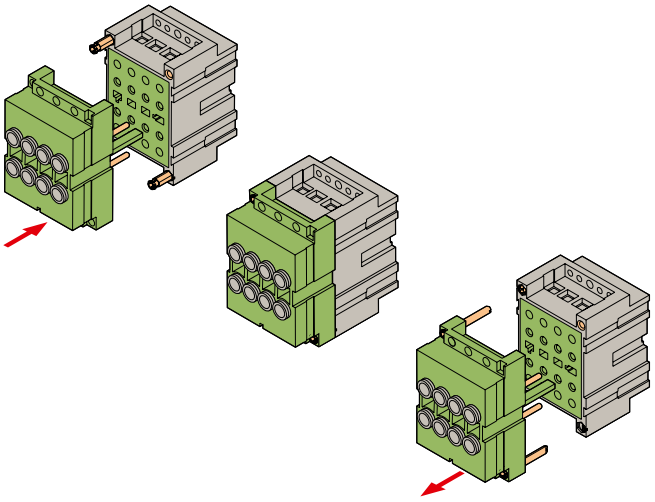

2. On a second time, connect the plug on the socket to insert the plug coding within the plug.

Sockets

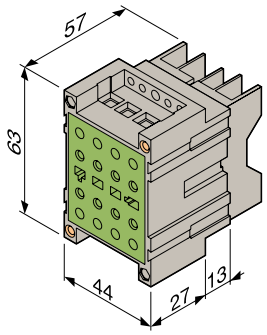

Half-base mounting

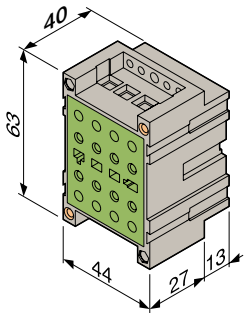

Rack mounting

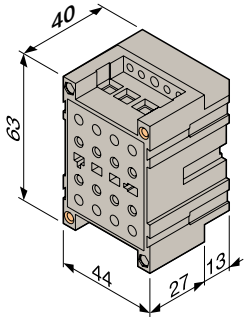

Base mounting

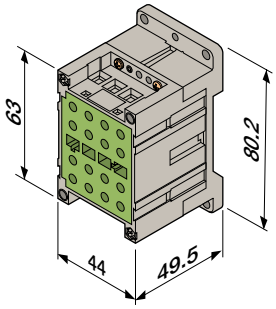

Base mounting with KEM-3

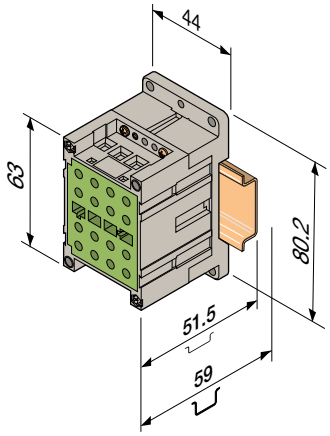

TH35 rail mounting

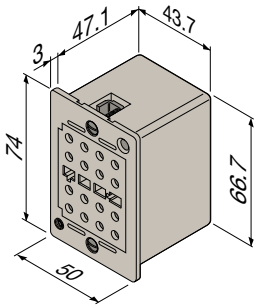

RJ45

Lids and covers

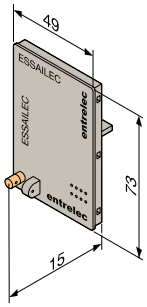

Lid

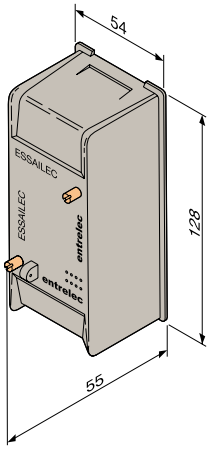

Cover

1SNC169022S0201

Plugs

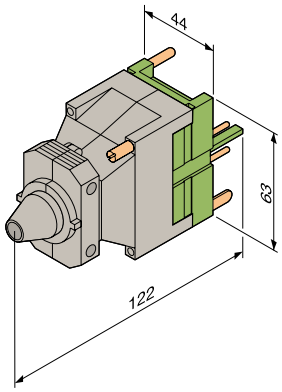

Plug 2x4 poles long cover

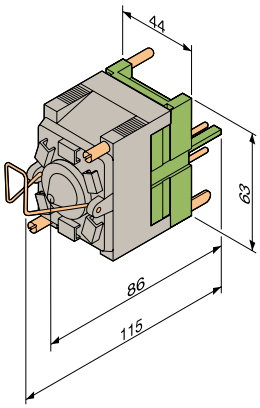

Plug 2x4 poles short cover

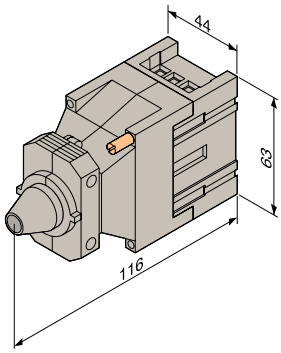

Reverse mounting

1SNC169022S0201

Sockets

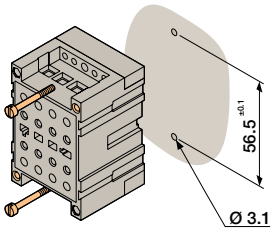

Base mounting
0.5 Nm < Tightening torque
< 0.8 Nm.

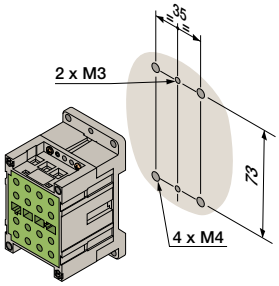

Base mounting

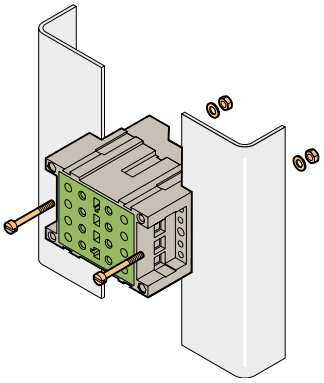

Flush mounting

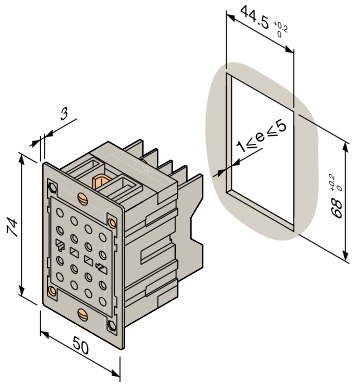

Flush mounting
The flush mounting kit must be mounted on the socket prior to the installation on the panel.
Tightening torque = 0.5 Nm maxi.

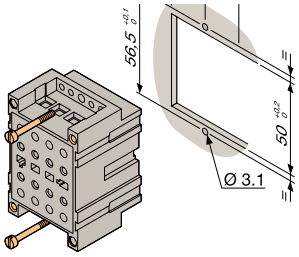

Half-base mounting - Rack mounting
The rack mounting is supplied
with 2 additional guiding pins.
0.5 Nm < Tightening torque < 0.8 Nm.

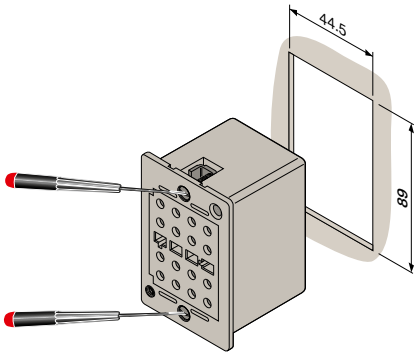

Flush mounting (RJ45)

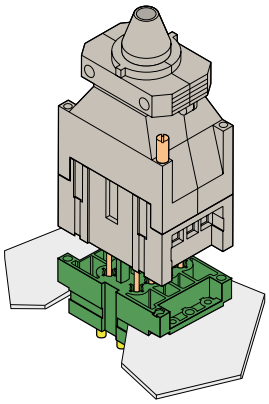

Reverse mounting

Lids and covers

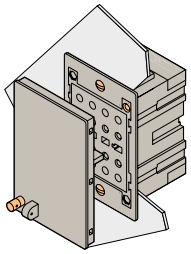

Flush mounting

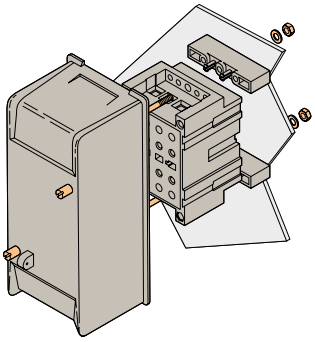

Base mounting

Outer dimensions
Sockets

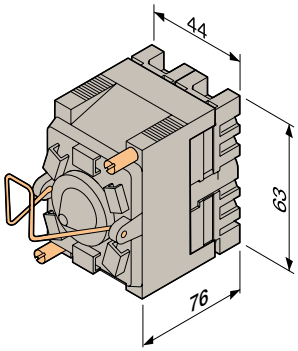

M20-I-C5A
20 points multicircuits half-base reverse mounting socket

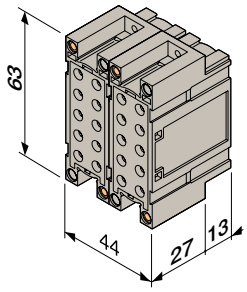

M20-C5A
20 points multicircuits
half-base mounting socket

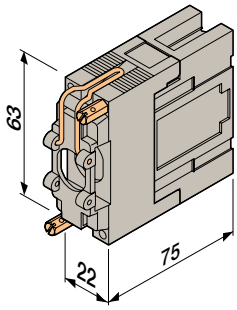

M10-I-C5A-1
10 points multicicuits
half-base reverse mounting socket

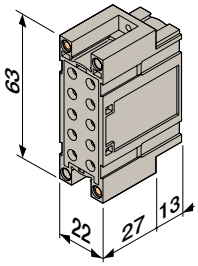

M10-D-C5A
10 points multicircuits
half-base mounting socket

Plugs

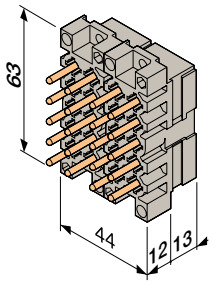

FIM20-I
20 points multicircuits
half-base reverse mounting plug

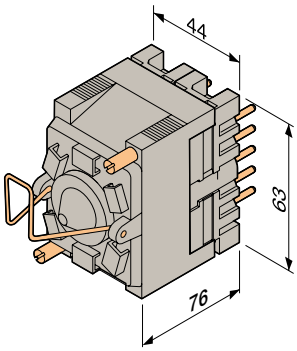

FIM20
20 points multicircuits
half-base mounting plug

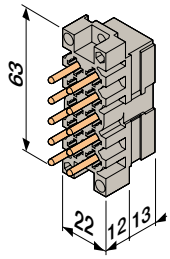

FIM10-I-1
10 points multicicuits
half-base reverse mounting plug

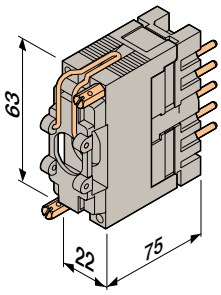

FIM10-1
10 points multicircuits
half-base mounting plug

Mounting instructions

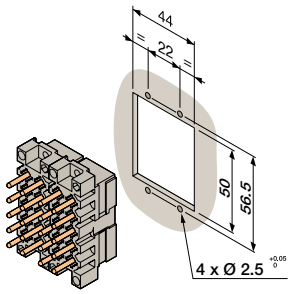

20 points multicircuits
half-base reverse mounting plug

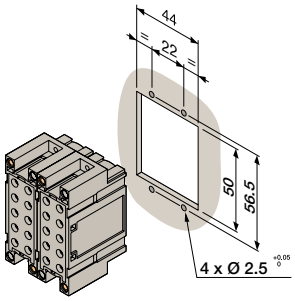

20 points multicircuits
half-base mounting socket

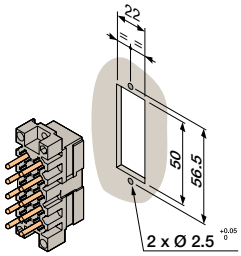

10 points multicicuits
half-base reverse mounting plug

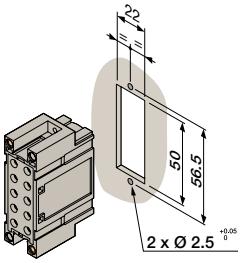

10 points multicircuits
half-base mounting socket

1SNC169022S0201

Index
Part Number classification

Part Number	Type	Page
1SNA164921R1700	BRE-T-1	54
1SNA164922R1000	BRE-T-1.5	54
1SNA164923R1100	BRE-T-2.5	54
1SNA166503R2700	TF-DS-VL	46
1SNA166506R2200	PF-DS-VL	46
1SNA166513R1000	M10-D-C5A	56
1SNA166516R1300	FIM10-1	56
1SNA166523R1200	CC-R-VA	22
1SNA166525R1400	FIC-2/4-1	26
1SNA166529R2000	FIC-2/4-R	26
1SNA166546R2100	FIT-1/4-D	53
1SNA166547R2200	FIT-1/4-G	52
1SNA166550R0100	FIT-2/4-1	52
1SNA166555R2200	FIP-1/4-D	53
1SNA166556R2300	FIP-1/4-G	52
1SNA166559R0600	FIP-2/4-1	52
1SNA166566R2500	M10-R-C5A	56
1SNA166573R2400	FIM10-R	56
1SNA166574R2500	FIM10-I-1	56
1SNA166576R2700	FIM20-I	56
1SNA166577R2000	CPT-2	55
1SNA166578R0100	CPC-1	55
1SNA166589R2500	FIC-2/4-I	26
1SNA166625R2000	CC-E-VA-6.6	22
1SNA166627R2200	TC-E-VA-2-2	34
1SNA166628R0300	TC-E-C5A-2.2	34
1SNA166630R0100	PC-E-VA-8.8	34
1SNA166638R0500	COR-C-R1-6.6	24
1SNA166643R0200	COR-C-3	24
1SNA166644R0300	FIT-2/1-2	51
1SNA166645R0400	CPP-2	55
1SNA166646R0500	CPT-1	55
1SNA166647R0600	CPP-1	55
1SNA166672R0700	FIT-2/4-I	52
1SNA166722R2100	CC-S-INF-VL-6.6	22
1SNA166723R2200	TO-S-INF-VL-12.12	40
1SNA166733R2400	CPT-4	55
1SNA166734R2500	CPC-7 (1)	55
1SNA166737R2000	CC-E-VA	22
1SNA166738R0100	CC-D-VA	22
1SNA166741R0400	TO-DS-VL	40
1SNA166742R0500	TC-DS-VL	34
1SNA166743R0600	TO-E-VA	40
1SNA166744R0700	TO-D-VA	40
1SNA166745R0000	TF-E-VA	46
1SNA166746R0100	TF-D-VA	46
1SNA166747R0200	TC-E-VA	34
1SNA166748R1300	TC-D-VA	34
1SNA166757R0400	PO-DS-VL	40
1SNA166758R1500	PC-DS-VL	34

Part Number	Type	Page
1SNA166759R1600	PO-E-VA	40
1SNA166760R1300	PO-D-VA	40
1SNA166761R0000	PF-E-VA	46
1SNA166762R0100	PF-D-VA	46
1SNA166763R0200	PC-E-VA	34
1SNA166764R0300	PC-D-VA	34
1SNA166772R0300	M10-P-C5A	56
1SNA166774R0500	M10-I-C5A-1	56
1SNA166777R0000	M20-I-C5A	56
1SNA166778R1100	COR-C-R2-6.6	24
1SNA166819R2300	FIC-2/1-1	26
1SNA166821R1500	FIT-2/1-1	51
1SNA166874R2200	DEO-D-VA	40
1SNA166876R2400	CPDE-1	55
1SNA166877R2500	FIDE-2/4	52
1SNA166878R0600	DEO-E-VA	40
1SNA166896R1100	DEF-D-VA	46
1SNA166897R1200	FIDE-1/4-D	53
1SNA166898R2300	FIDE-1/4-G	52
1SNA166925R1500	TO-E-VA-12.12	40
1SNA166926R1600	CPDE-2	55
1SNA166928R2000	KEM-1	23
1SNA166930R2600	CPT-5	55
1SNA166936R1000	FIC-2/4-2	26
1SNA166937R1100	FIT-2/4-2	51
1SNA166939R2300	FIP-2/4-2	51
1SNA166941R2500	CC-I-VA-2	22
1SNA166943R2700	FIDE-2/4-2	51
1SNA166945R2100	TO-I-VA-2	40
1SNA166948R0400	TC-S-INF-VL-2.2	34
1SNA166962R0000	KEM-3	23
1SNA166963R0000	CC-TH35-VL-6.6	22
1SNA166964R0000	TC-TH35-VL	34
1SNA166972R0000	TT4-S-VL-INF	48
1SNA166976R0000	CC-E-VA-R2-6.6	22
1SNA166977R0000	TC-E-VA-R2-2.2	34
1SNA166978R0000	COR-P-R1-8.8	50
1SNA166979R0000	COR-C-R3	24
1SNA166980R0000	BRE-T-4	54
1SNA167002R0000	CPT-RJ45	14
1SNA167008R0300	EXBR1	26
1SNA167260R1700	BRE-C-2.5	26
1SNA167264R0700	BRE-C-1	26
1SNA167265R0000	BRE-C-1.5	26
1SNA167378R1100	COP-FI-1	58
1SNA167379R1200	COP-E-1	58
1SNA167496R1100	PCVA	23
1SNA167622R2600	IR1	26
1SNA167623R2700	IR2	26
1SNA167624R2000	IR3	26

Part Number	Type	Page
1SNA167680R0500	BJ-VL	23
1SNA167681R2200	PCVL	23
1SNA167682R2300	FX	23
1SNA167690R0700	FCB-1	26
1SNA167692R2500	FCB-2	26
1SNA167697R2200	CA	26
1SNA167779R1300	BRE-T-0.75	54
1SNA167927R1000	FC4-1	26
1SNA167931R1400	FC4-5	26
1SNA167932R1500	COR-C-R4-6.6	24
1SNA167933R1600	COR-T-R5-2.2	50
1SNA167934R1700	COR-C-R5-6.6	24
1SNA167935R1000	COR-T-4-4	50
1SNA167936R1100	FI-2/4-DIA4	49
1SNA167937R0000	FIC-2/4-DIA4	25
1SNA167971R2400	DLVR	26
1SNA167981R1700	DI	26
1SNA168146R0200	BRE-C-6	26
1SNA168147R0300	BRE-T-6	54
1SNA168160R1400	BRE-T-0.34	54
1SNA173181R1300	PSC	26
1SNA183436R0500	CVABM	23
1SNA205876R0400	BRE-C-4	26
1SNA566000R0000	TC-E-RJ45-INF	14
1SNA566001R0000	FI-RJ45-DIA4	14

Index
Type classification

Type	Part Number	Page
BJ-VL	1SNA167680R0500	23
BRE-C-1	1SNA167264R0700	26
BRE-C-1.5	1SNA167265R0000	26
BRE-C-2.5	1SNA167260R1700	26
BRE-C-4	1SNA205876R0400	26
BRE-C-6	1SNA168146R0200	26
BRE-T-0.34	1SNA168160R1400	54
BRE-T-0.75	1SNA167779R1300	54
BRE-T-1	1SNA164921R1700	54
BRE-T-1.5	1SNA164922R1000	54
BRE-T-2.5	1SNA164923R1100	54
BRE-T-4	1SNA166980R0000	54
BRE-T-6	1SNA168147R0300	54
CA	1SNA167697R2200	26
CC-D-VA	1SNA166738R0100	22
CC-E-VA	1SNA166737R2000	22
CC-E-VA-6.6	1SNA166625R2000	22
CC-E-VA-R2-6.6	1SNA166976R0000	22
CC-I-VA-2	1SNA166941R2500	22
CC-R-VA	1SNA166523R1200	22
CC-S-INF-VL-6.6	1SNA166722R2100	22
CC-TH35-VL-6.6	1SNA166963R0000	22
COP-E-1	1SNA167379R1200	58
COP-FI-1	1SNA167378R1100	58
COR-C-3	1SNA166643R0200	24
COR-C-R1-6.6	1SNA166638R0500	24
COR-C-R2-6.6	1SNA166778R1100	24
COR-C-R3	1SNA166979R0000	24
COR-C-R4-6.6	1SNA167932R1500	24
COR-C-R5-6.6	1SNA167934R1700	24
COR-P-R1-8.8	1SNA166978R0000	50
COR-T-4-4	1SNA167935R1000	50
COR-T-R5-2.2	1SNA167933R1600	50
CPC-1	1SNA166578R0100	55
CPC-7	1SNA166734R2500	55
CPDE-1	1SNA166876R2400	55
CPDE-2	1SNA166926R1600	55
CPP-1	1SNA166647R0600	55
CPP-2	1SNA166645R0400	55
CPT-1	1SNA166646R0500	55
CPT-2	1SNA166577R2000	55
CPT-4	1SNA166733R2400	55
CPT-5	1SNA166930R2600	55
CPT-RJ45	1SNA167002R0000	14
CVABM	1SNA183436R0500	23
DEF-D-VA	1SNA166896R1100	46
DEO-D-VA	1SNA166874R2200	40
DEO-E-VA	1SNA166878R0600	40
DI	1SNA167981R1700	26
DLVR	1SNA167971R2400	26
EXBR1	1SNA167008R0300	26
FC4-1	1SNA167927R1000	26
FC4-5	1SNA167931R1400	26
FCB-1	1SNA167690R0700	26
FCB-2	1SNA167692R2500	26
FI-2/4-DIA4	1SNA167936R1100	49
FIC-2/1-1	1SNA166819R2300	26
FIC-2/4-1	1SNA166525R1400	26
FIC-2/4-2	1SNA166936R1000	26
FIC-2/4-DIA4	1SNA167937R0000	25
FIC-2/4-I	1SNA166589R2500	26
FIC-2/4-R	1SNA166529R2000	26
FIDE-1/4-D	1SNA166897R1200	53
FIDE-1/4-G	1SNA166898R2300	52
FIDE-2/4	1SNA166877R2500	52
FIDE-2/4-2	1SNA166943R2700	51
FIM10-1	1SNA166516R1300	56
FIM10-I-1	1SNA166574R2500	56
FIM10-R	1SNA166573R2400	56
FIM20-I	1SNA166576R2700	56
FIP-1/4-D	1SNA166555R2200	53
FIP-1/4-G	1SNA166556R2300	52
FIP-2/4-1	1SNA166559R0600	52
FIP-2/4-2	1SNA166939R2300	51
FI-RJ45-DIA4	1SNA566001R0000	14
FIT-1/4-D	1SNA166546R2100	53
FIT-1/4-G	1SNA166547R2200	52
FIT-2/1-1	1SNA166821R1500	51
FIT-2/1-2	1SNA166644R0300	51
FIT-2/4-1	1SNA166550R0100	52
FIT-2/4-2	1SNA166937R1100	51
FIT-2/4-I	1SNA166672R0700	52
FX	1SNA167682R2300	23
IR1	1SNA167622R2600	26
IR2	1SNA167623R2700	26
IR3	1SNA167624R2000	26
KEM-1	1SNA166928R2000	23
KEM-3	1SNA166962R0000	23
M10-D-C5A	1SNA166513R1000	56
M10-I-C5A-1	1SNA166774R0500	56
M10-P-C5A	1SNA166772R0300	56
M10-R-C5A	1SNA166566R2500	56
M20-I-C5A	1SNA166777R0000	56
PC-DS-VL	1SNA166758R1500	34
PC-D-VA	1SNA166764R0300	34
PC-E-VA	1SNA166763R0200	34
PC-E-VA-8.8	1SNA166630R0100	34
PCVA	1SNA167496R1100	23
PCVL	1SNA167681R2200	23
PF-DS-VL	1SNA166506R2200	46
PF-D-VA	1SNA166762R0100	46
PF-E-VA	1SNA166761R0000	46
PO-DS-VL	1SNA166757R0400	40
PO-D-VA	1SNA166760R1300	40
PO-E-VA	1SNA166759R1600	40
PSC	1SNA173181R1300	26
TC-DS-VL	1SNA166742R0500	34
TC-D-VA	1SNA166748R1300	34
TC-E-C5A-2.2	1SNA166628R0300	34
TC-E-RJ45-INF	1SNA566000R0000	14
TC-E-VA	1SNA166747R0200	34
TC-E-VA-2-2	1SNA166627R2200	34
TC-E-VA-R2-2.2	1SNA166977R0000	34
TC-S-INF-VL-2.2	1SNA166948R0400	34
TC-TH35-VL	1SNA166964R0000	34
TF-DS-VL	1SNA166503R2700	46
TF-D-VA	1SNA166746R0100	46
TF-E-VA	1SNA166745R0000	46
TO-DS-VL	1SNA166741R0400	40
TO-D-VA	1SNA166744R0700	40
TO-E-VA	1SNA166743R0600	40
TO-E-VA-12.12	1SNA166925R1500	40
TO-I-VA-2	1SNA166945R2100	40
TO-S-INF-VL-12.12	1SNA166723R2200	40
TT4-S-VL-INF	1SNA166972R0000	48

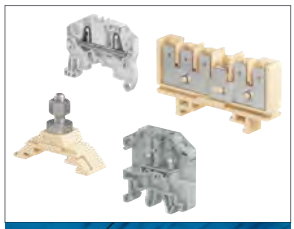

RAILWAY APPLICATIONS

Terminal Blocks

ENTRELEC Terminal Blocks

As a leading supplier for railway applications, TE Connectivity proposes the most complete terminal block range of the market complying with all main international railway standards. The ENTRELEC range for railway applications is available in four technologies and covers all the needs for rolling stock and railroad infrastructures.

Summary_1

Railway applications
Terminal blocks

Ranges, solutions and standards presentation 2

SNK series, PI-Spring technology 11

SNK series, Pluggable technology 69

ADO System® IDC and Pluggable technologies 103

Quick-connect technology 137

Stud technology 169

Screw clamp technology complying with NF F 55251 and CT448 207

SNK series, Screw clamp technology 219

Accessories 309

Index 352

1-1773966-1_EN - Edition January 2020

TE Connectivity proposes one of the largest Din Rail Terminal block offering on the market with various technologies: screw, PI-Spring, spring, IDC, pluggable, stud, etc. found in over 8000 products & solutions.

	SNK terminal blocks		Dedicated applications terminal blocks		Terminal blocks for railway applications
			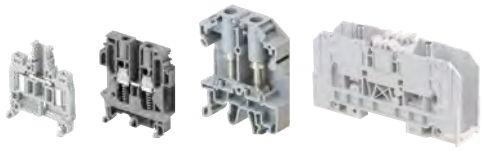		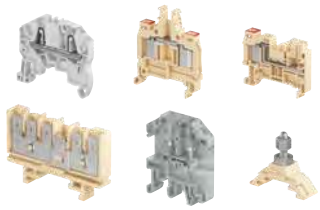
Scope	Qualified for worldwide applications and severe environments (such as hazardous locations, railways, marine and solar applications..). From 0.2 to 300 mm².		Specific terminal blocks and technologies for dedicated applications and markets.		The largest offering on the market for rolling stock and infrastructures.
Product families & functions	SNK PI-Spring technology 2.5 to 16 mm² 12 to 4 AWG	Feed-through Multi-deck Ground Disconnect for fuses Component holder	ADO System® (IDC) 0.22 to 4 mm² 24 to 12 AWG	ADO-ADO or ADO-screw clamp Feed-through / Multi-deck / Ground / Disconnect / for fuses / Component holder	SNK PI-Spring technology 2.5 to 16 mm² 12 to 4 AWG
			Safety (spring loaded) 0.22 to 10 mm² 24 to 6 AWG	Feed-through Disconnect Test & measurement	SNK pluggable screw & PI-Spring technologies 2.5 to 4 mm² 12 to 10 AWG
	SNK screw clamp technology 4 to 240 mm² 12 to 500 Kcmil	Feed-through Multi-deck Ground Disconnect for fuses Test & measurement Marshalling Component holder	Stud 25 to 300 mm² 4 AWG to 1000 Kcmil	One stud 2 studs One stud - One screw clamp	ADO System® (IDC) 1.5 to 4 mm² 16 to 12 AWG
			Ring lug 6 to 16 mm² 8 to 6 AWG	Feed-through Test & measurement	Stud 4 to 185 mm²
	SNK pluggable screw & PI-Spring technologies 2.5 to 4 mm² 12 to 10 AWG	Feed-through Multi-deck Ground	Miniblocks 1.5 to 6 mm² 18 to 8 AWG	Screw clamp Spring ADO System® (IDC)	Quick-connect 2.5 to 6 mm²
			Other types Test & measurement: with sliding link, blade, plug Pluggable: feed-through, double deck, disconnect Sensors/actuators: screw, spring, ADO system (IDC) Installation: screw, spring Protection: ground + neutral Component holders: screw, spring, ADO system (IDC)		

www.te.com

	DBL power distribution blocks	ESSAILEC® test blocks	Interfast PLC pre-wiring system	Marking solutions
				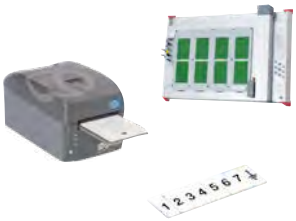
	The preferred choice for primary power distribution and solar applications.	Test blocks for safe and easy testing on secondary circuits of current and voltage transformers and sensors.	PLC pre-wiring system for fast, flexible, reliable connection of PLC's in process automation applications.	Markers & marking systems for all identification requirements in electrical panels.
	From 80 A up to 550 A (IEC) Modular blocks: single pole, three & four poles, up to 12 outputs Terminal blocks types: 2 to 10 poles, up to 20 outputs	Current and voltage sockets & plugs Simultaneous testing of 1 to 4 independent circuits on the same socket Several testing principle such as "make before break" for safe current transformer testing Panel and switchboard mounting : base, flush, rack, TH35 rail Multicircuits sockets & plugs	Interfast PCB: Compact & standard modules Interfast MS: Modular system based on terminal block technology Functions: – 1 to 4 wire connections (sensors) – Disconnect – Fuse – Signal indication – Relays – Optocouplers – Solenoid valve control – Galvanic isolation (2.5 kV).	Terminal block identification and group markers Wire and cable identification Component and equipment identification Panel identification Pre-printed markers for terminal blocks

1SNC160261S0201

TE Connectivity, a worldwide leading supplier for rolling stock and infrastructure
Compliance with main international railway standards
All technologies: PI-Spring, pluggable, ADO System® (IDC), stud and quick-connect
Customized terminal block assemblies: from design to manufacturing and packing
Easy Rail Designer 3D: ease the design of terminal blocks assemblies

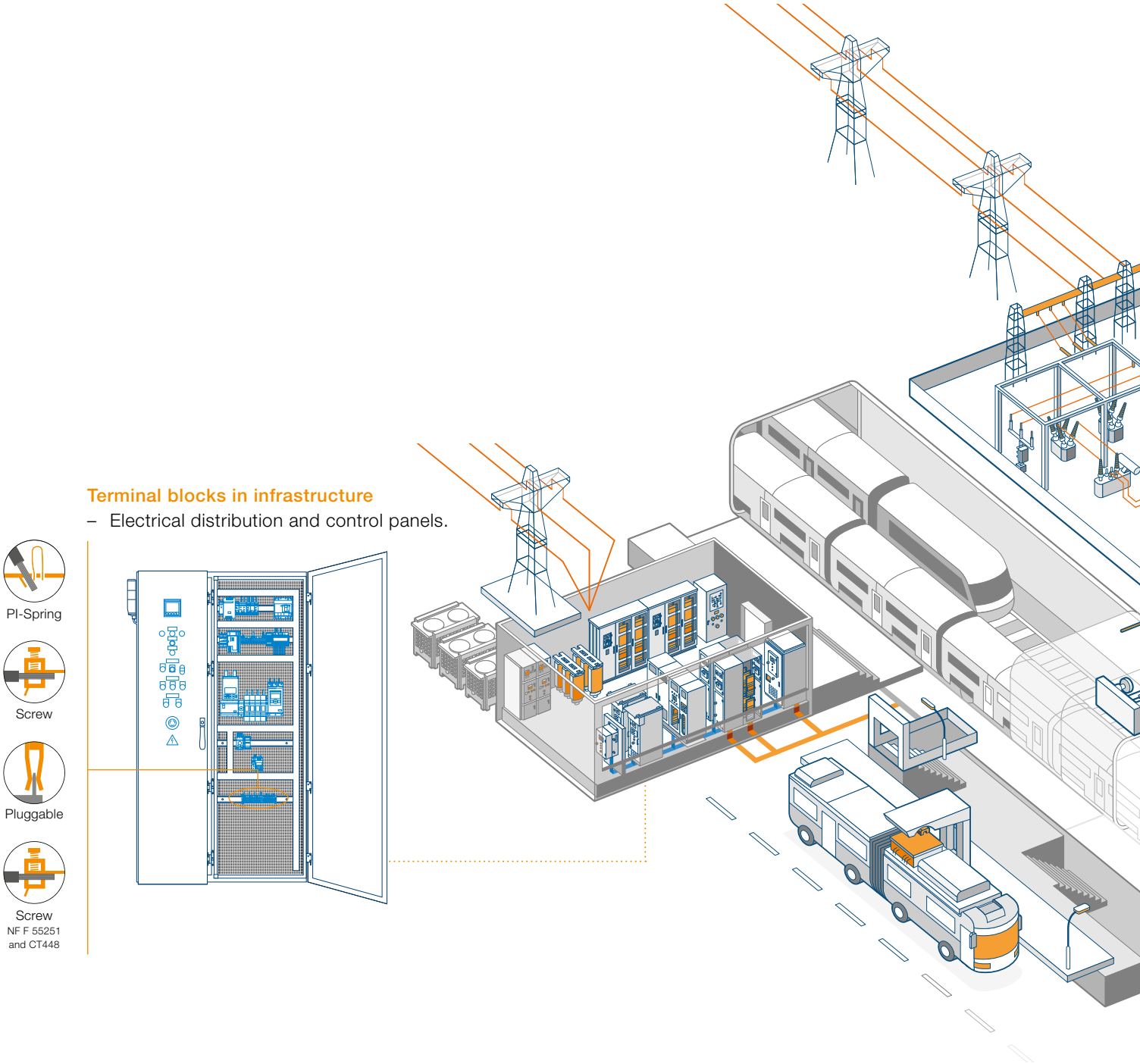

Terminal blocks in rolling stock

- HVAC
- Door control
- Electrical distribution
- Control system and Pilot center.

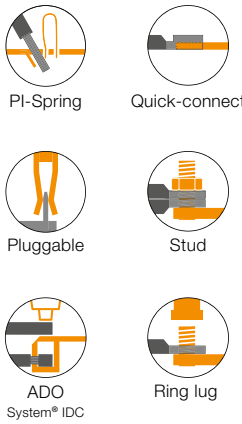

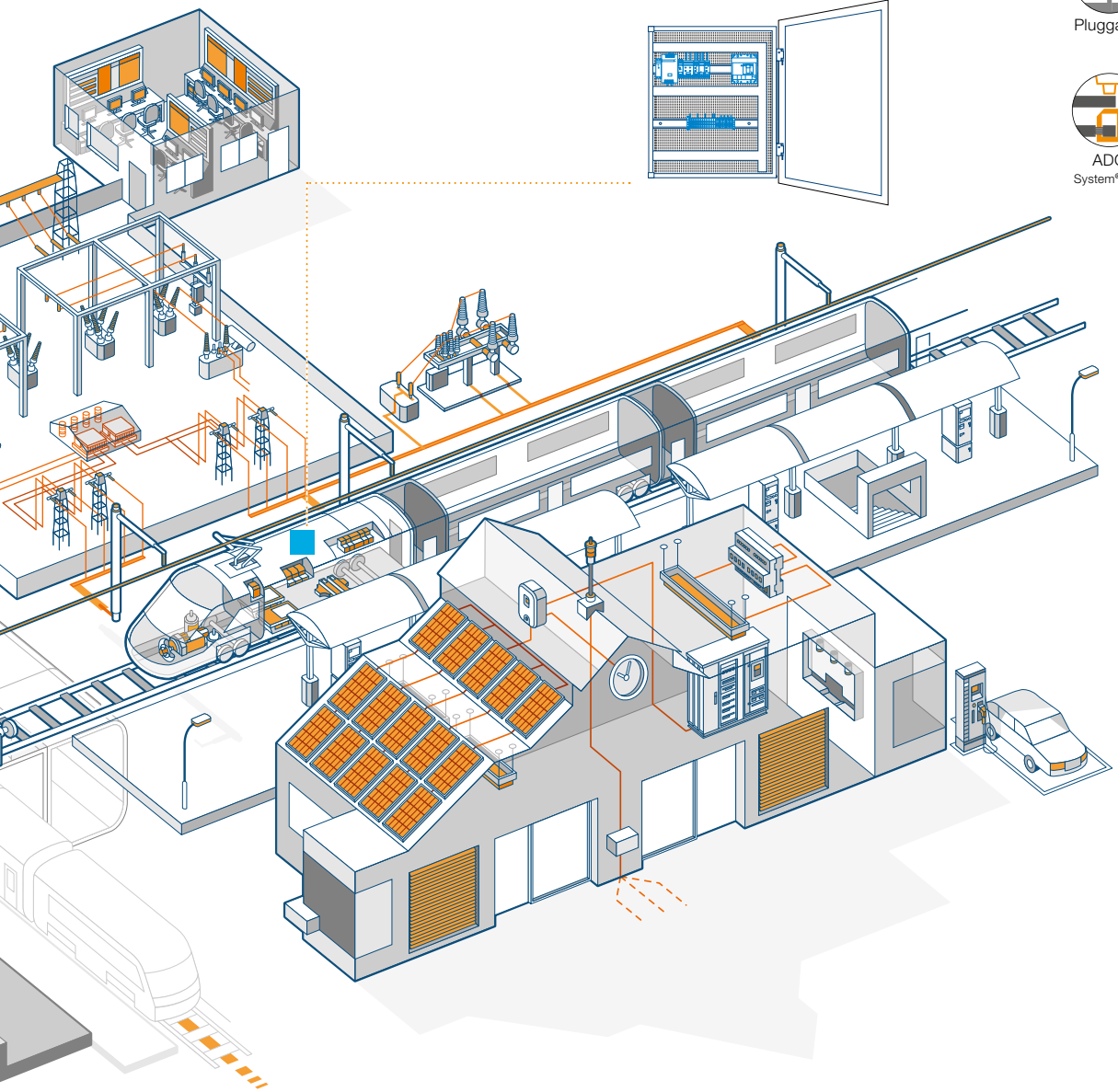

1SNC167084S0201

SNK series, PI-Spring and pluggable technologies

The benefits of 2 technologies in 1 connection

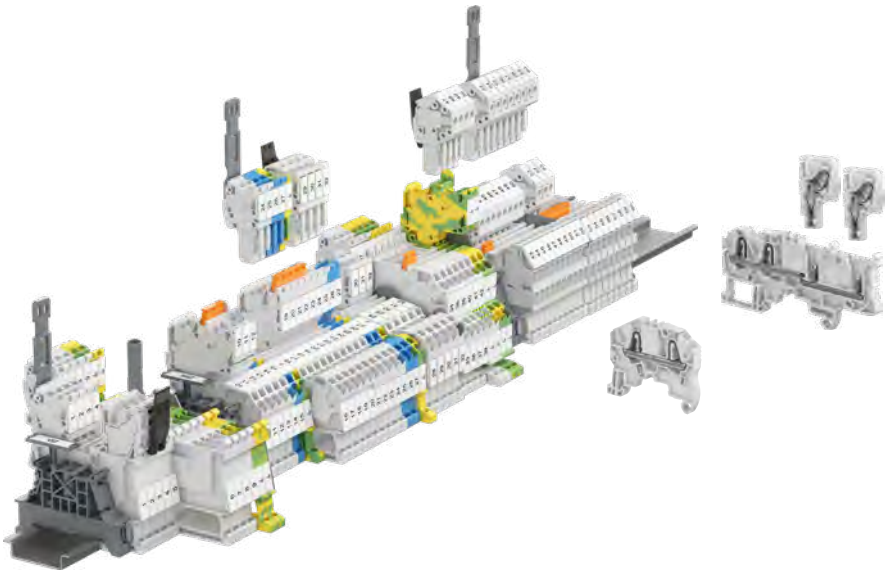

ADO System® IDC and pluggable technologies

The fastest connection technology for rolling stock

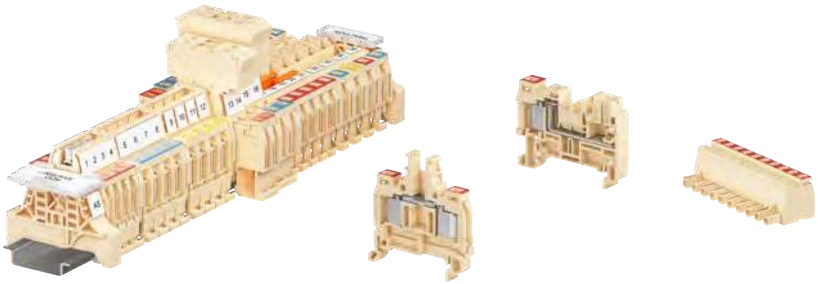

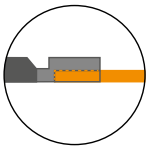

Quick-connect technology

The historical technology for railway control and signal distribution

1SNC167085S0201

Stud technology

The "Pull-out proof" connection for rolling stock

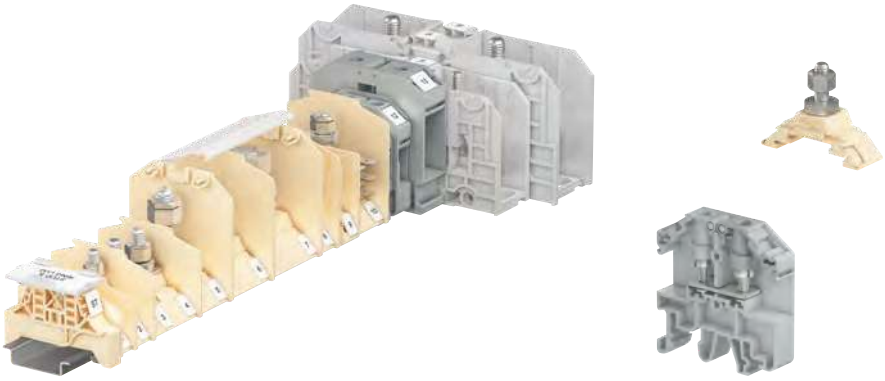

Screw clamp technology complying with NF F 55251 and CT448

The proven reliability and performance for railway infrastructure

SNK series, Screw clamp technology

A smart design to support your daily connection challenges

1SNC167085S0201

Rail vehicles are subjected to extreme environmental conditions (high vibration and shock), corrosion (underground applications or tunnels).
All ENTRELEC terminal blocks listed in this catalog are tested in accordance with the latest and most demanding standards applying to rolling stock applications.

IEC 61373 railway applications – Rolling stock equipment – Shock and vibration tests
TE Connectivity terminal blocks are complying with **category 1 (body mounted) class B.**

EN 45545-2 railway applications. Fire protection on railway vehicles. Requirements for fire behavior of materials and components
TE Connectivity terminal blocks plastic materials are rated **HL3 R22 (the highest Hazard level)**. They can be used on vehicles for subway, tube, sleeping and couchette.

NF F 16-101 Directive relative to selecting materials in relation to their fire resistance in terms of its behavior in a fire, the opacity of smoke and the toxicity of the gas released.

NF F 16-102 Complement to NF F 16-101. The purpose of this standard is to specify the application of NF F 16-101 to electrical equipment and especially to individual apparatus.
TE Connectivity terminal blocks plastic materials are rated **I2F2. Level 3.** This level concern products mounted inside a room for passengers or running crew.

UL94 (North America) standard for safety of Flammability of Plastic Materials for parts in devices and Appliances testing
TE Connectivity terminal blocks plastic materials are rated **UL94 V0.**

NFPA 130 (North America) standard for Fixed Guideway Transit and Passenger rail systems
TE Connectivity terminal blocks plastic materials complies with **NFPA130 per ASTM E 162** and **ASTM E 662** standards tests. It also complies with **FRA238.103** and **BSS 7239** standards.

UNI CEI 11170-3 (Italy) Fire Test to Railway Components
TE Connectivity terminal blocks have their plastic materials in accordance with the FS Italian standard UNI EN 11170-3 according to the test conditions of ISO 11925-2 (flame 30s) and NF F 16-101
(F2 index).

1SNK160090S0201 - Rev. A

Engineering, do it yourself **easily**

Advanced 3D drawing and data export

- Built-in 3D viewer
- Integration to CAD/CAE softwares
- Compatibility with TE Connectivity printers
- Detailed drawings of the rail, assembly and markers.

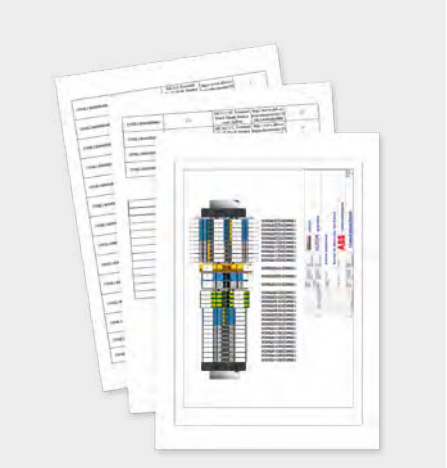

Customized project management

- Management of multiple projects
- Indication on the drawing of the supplier's, integrator's and end user's data
- Drawing update indexing with PDF report.

User-friendly configurator

- Intuitive Windows® (1) user interface
- Autocorrecting system
- Powerful search engine
- Insertion of products external to the database.

(1) Windows® is a registered trademark of Microsoft.

Assembling, rely on TE Connectivity expertise

TE Connectivity technical expertise

- Drawing technical verification done by TE Connectivity experts
- 100% reliable data import to TE Connectivity production system.

Flexible production

- 3 types of assembly:
  - rail mounted
  - pre-assembled
  - packed in kit.
- Possibility to add some other TE Connectivity Din rail products.

Optimized inventory

- Products and markers stocked by TE Connectivity
- Marking managed by TE Connectivity
- One single product part number corresponds to one complete assembly.

1SNC167101S0201

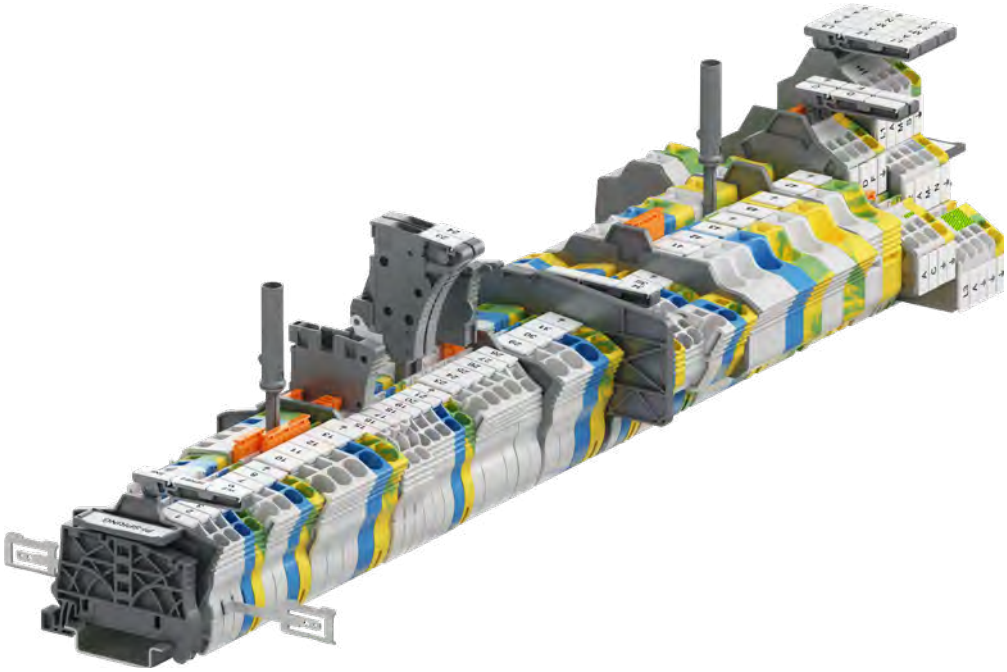

Railway applications, terminal blocks
PI-Spring technology

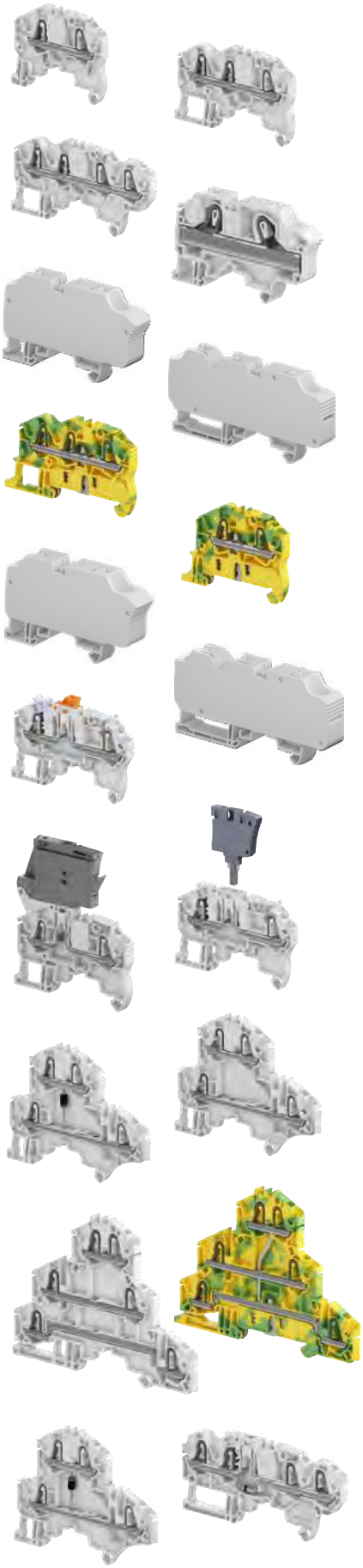

Technologies presentation			12
Overview			18
Feed-through			
2.5 mm² / 12 AWG	**ZK2.5**		19
	ZK2.5-3P	with 3 connections	20
	ZK2.5-4P	with 4 connections	21
4 mm² / 10 AWG	**ZK4**		22
	ZK4-3P	with 3 connections	23
	ZK4-4P	with 4 connections	24
6 mm² / 8 AWG	**ZK6**		25
	ZK6-3P	with 3 connections	26
10 mm² / 6 AWG	**ZK10**		27
	ZK10-PV		28
	ZK10-3P	with 3 connections	29
	ZK10-3P-PV	with 3 connections	30
16 mm² / 4 AWG	**ZK16**		31
	ZK16-PV		32
	ZK16-3P	with 3 connections	33
	ZK16-3P-PV	with 3 connections	34
Ground			
2.5 mm² / 12 AWG	**ZK2.5-PE**		35
	ZK2.5-PE-3P	with 3 connections	36
	ZP2.5-PE-4P	with 4 connections	37
4 mm² / 10 AWG	**ZK4-PE**		38
	ZK4-PE-3P	with 3 connections	39
	ZK4-PE-4P	with 4 connections	40
6 mm² / 8 AWG	**ZK6-PE**		41
	ZK6-PE-3P	with 3 connections	42
10 mm² / 6 AWG	**ZK10-PE**		43
	ZK10-PE-3P	with 3 connections	44
16 mm² / 4 AWG	**ZK16-PE**		45
	ZK16-PE-3P	with 3 connections	46
Disconnect with blade			
2.5 mm² / 12 AWG	**ZK2.5-S**	with test sockets	47
	ZK2.5-S-4P	with test sockets	48
	ZK2.5-S-R1		49
Disconnect with plug			
2.5 mm² / 12 AWG	**ZK2.5-SP**	with test sockets	50
	ZK2.5-SP-4P	with test sockets	51
For 5x20 fuses			
2.5 mm² / 12 AWG	**ZK2.5-SF**		52
	ZK2.5-SF-R	with blown fuse indicator	53
Double deck			
2.5 mm² / 12 AWG	**ZK2.5-D2**	2 feed-through circuits	54
	ZK2.5-D1	1 feed-through circuit	55
	ZK2.5-D2-PE	1 feed-through circuit and 1 ground circuit	56
	ZK2.5-D1-PE	1 ground circuit	57
Triple deck			
2.5 mm² / 12 AWG	**ZK2.5-T3**	3 feed-through circuits	58
	ZK2.5-T1	1 feed-through circuit	59
	ZK2.5-L-L-PE		60
	ZK2.5-L-N-PE	2 feed-through circuits and 1 ground circuit	61
	ZK2.5-T1-PE	1 ground circuit	62
Component holder			
2.5 mm² / 12 AWG	**ZK2.5-CH-4P-LR**		63
	ZK2.5-CH-4P-RL		64
	ZK2.5-D-CH-UD		65
	ZK2.5-D-CH-DU		66
	ZK2.5-D-CH2-DU-RL		67

The patented PI-Spring technology provides the benefits of both Push-In and Spring technologies in one connection

Speed up your projects

50% faster connection time with Push-in mode

Our Push-in connection technology allows:
A direct one step insertion with rigid and prepared flexible conductors.
Easy and quick insertion of the prepared flexible conductor or rigid conductor.

Reduced effort and conductor preparation time with spring mode

- Our connection requires minimal effort to insert wires with the screwdriver
- Flexible conductors preparation is not necessary.
- The screwdriver locks onto terminal freeing up hands.

Better project identification

- Circuit identification is improved thanks to the 20% larger marking area
- Pre-mark by hand or with label on our flat marking surface and start immediately the wiring, before the final markers mounting
- Spare markers re-printing in case of modifications.

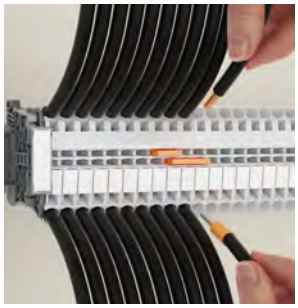

Push-in mode

Spring mode

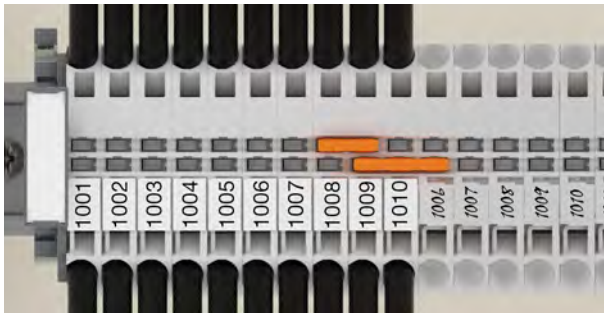

Clear circuit identification

1SNK162074S0201

Easy to install

Smart design facilitating assembly process

Mounting, wiring, testing… made easy

Avoid mounting and wiring errors: asymmetrical design allows immediate visual check in case of reversed terminal blocks.

Asymmetrical design avoids mounting error

Faster accessories mounting

Save up to 70% mounting time thanks to :

- screwless jumpers, component plugs, test devices, end stops and snap-in ground terminal blocks.

Screwless accessories

Snap-in ground terminal blocks

Closed jumper location allows great stiffness of the terminal block, avoid deflection while tightening and optimal jumper guiding.

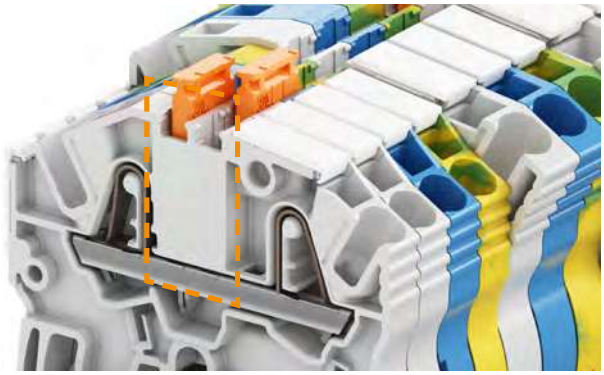

Closed jumper location for stiffness.

1SNK162074S0201

Easy to install

Smart accessories

Flexible test solutions from individual insulated test adapter to test connectors for complete assemblies testing.

- Direct plug-in into jumpers channels
- 5, 6, 8 mm spacing, mixing various spacing is possible
- 1000 V rating.

Plug-in individual test adapter. Plug-in test connector.

Component holder plugs for series or parallel component mounting (resistors, filters, diodes...).
Can be installed after wiring.
Series plug offers screwless component connection (no soldering).

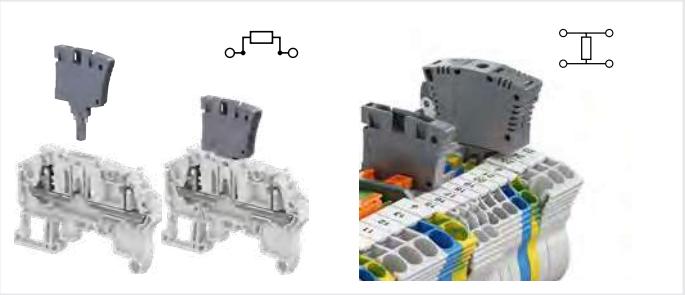

Series plug associated with disconnect blocks. Parallel plug to be installed between 2 blocks.

Smart plug-in jumpers:

Pre-cut poles removable by hand: clean cut.
Insulated up to 1000 V (avoid use of separators).
Predefined shapes in molding to easily identify connected poles with a pen.

Pre-cut poles easy removable by hand. Predefined shape to identify connected poles.

1SNK162074S0201

Optimized logistics

Reduce your accessories inventory by up to 50%

SNK PI-Spring, screw and pluggable ranges share the same accessories.

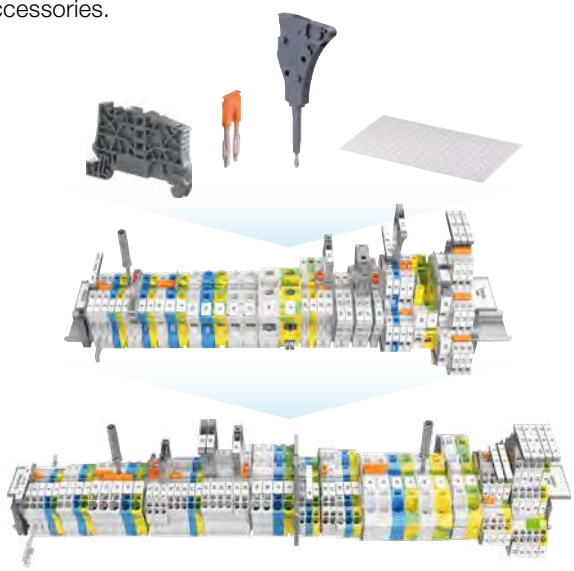

Shared accessories for SNK PI-Spring, screw and pluggable ranges

- All end sections and circuit separators fit several types and sizes of blocks
- One end section fits up to 21 models
- One circuit separator fits with 62 terminal blocks.

End sections and circuit separators fit several types and sizes of blocks

50% less inventory makes PI-Spring attractive to all worldwide markets

- The user selects one range but benefit from 2 connection modes (push-in and spring) which have global certifications and access to markets and applications worldwide
- Reduced packaging adapted to the usage (20 items packaging on some items).

Push-in range + Spring range

PI-Spring

Facilitate maintenance operations

Terminal blocks can be individually removed from a terminal assembly equipped with markers: TE Connectivity markers become independent after strip mounting. The markers remain on terminal in any situation.

Markers are interchangable: the smaller marker can fit any bigger block.

Maintenance operations facilitated

Reliable in harsh conditions

Qualified for worldwide markets, applications and for severe environments: vibration, shock, corrosion…

High corrosion resistance

PI-Spring clamp is made of high quality stainless steel.
Salt mist withstand up to 1,000 hours (as per IEC 60068).

1SNK162074S0201

2 Connections

Single deck
Feed-through
Ground
Disconnect
Fuse
Solar : 1500 VDC

NEW

3 Connections

Single deck
Feed-through
Ground
Solar: 1500 VDC

NEW

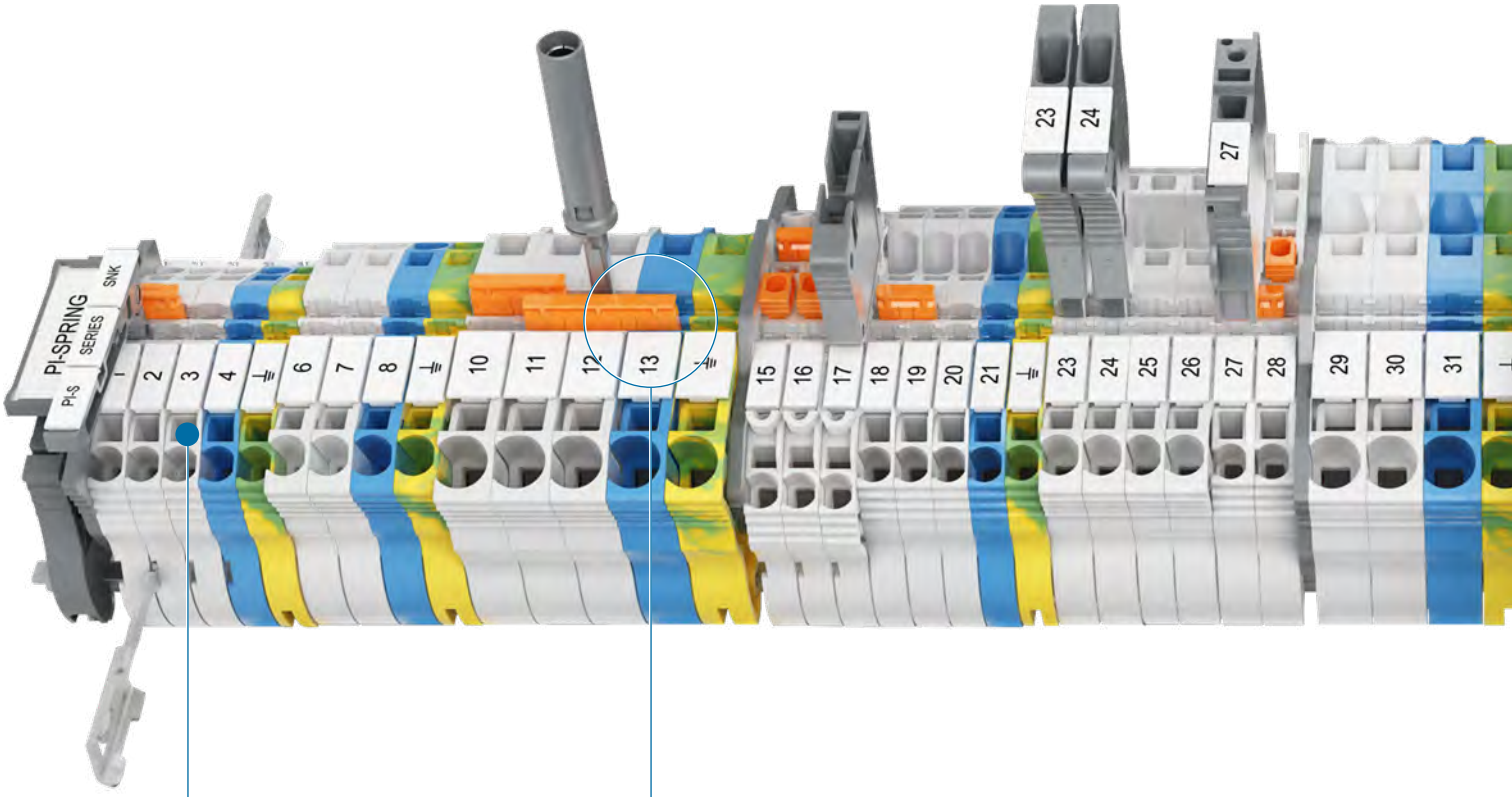

Voltage test
screwdriver entry point accepts Category II probes

Double central channels
allows multiconfigurations (jumpering, testing and measuring)

4 Connections

Single deck
Feed-through
Ground
Disconnect
Component holder

2x2 Connections

Double deck
Feed-through
Ground
Component holder

3x2 Connections

Triple deck
Feed-through
Ground

Two circuit separators
for the entire range

End section
can be used as circuit separator

Rotating label holder
easy plug-in in jumper channel

1SNK162068S0201 - Rev. A

Section		Feed-through			Ground			Component holder	
2.5 mm²	12 AWG	ZK2.5	ZK2.5-3P	ZK2.5-4P	ZK2.5-PE	ZK2.5-PE-3P	ZK2.5-PE 4P	ZK2.5-CH-4P-LR	ZK2.5-CH-4P-RL
4 mm²	10 AWG	ZK4	ZK4-3P	ZK4-4P	ZK4-PE	ZK4-PE-3P	ZK4-PE- 4P		
6 mm²	8 AWG	ZK6	ZK6-3P		ZK6-PE	ZK6-PE-3P			
10 mm²	6 AWG	ZK10	ZK10-3P		ZK10-PE	ZK10-PE-3P			
		ZK10-PV New	ZK10-3P-PV						
16 mm²	4 AWG	ZK16	ZK16-3P		ZK16-PE	ZK16-PE-3P			
		ZK16-PV New	ZK16-3P-PV						

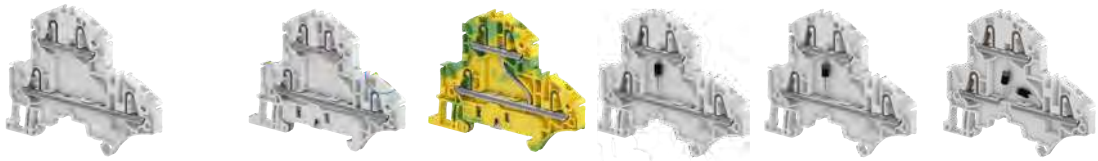

Double deck		Feed-through		Ground		Component holder		
Section								
2.5 mm²	12 AWG	ZK2.5-D2	ZK2.5-D1	ZK2.5-D2-PE	ZK2.5-D1-PE	ZK2.5-D-CH-UD	ZK2.5-D-CH-DU	ZK2.5-D-CH2-DU-RL

Triple deck		Feed-through		Ground	
Section					
2.5 mm²	12 AWG	ZK2.5-T3	ZK2.5-T1	ZK2.5-L-L-PE	ZK2.5-T1-PE
				ZK2.5-L-N-PE	

Disconnect		With blade		With plug		For 5x20 mm fuses		Aligned with ZK2.5-SF
Section								
2.5 mm²	12 AWG	ZK2.5-S	ZK2.5-S-4P	ZK2.5-SP	ZK2.5-SP-4P	ZK2.5-SF	ZK2.5-SF-R1	ZK2.5-S-R1
							ZK2.5-SF-R3	

Clamp - Channels for jumpering or testing - Test socket - Blown-fuse indicator

1SNK162020S0201 - Rev. B

ZK2.5 PI-Spring terminal blocks
Feed-through - 5.2 mm 0.205 in spacing

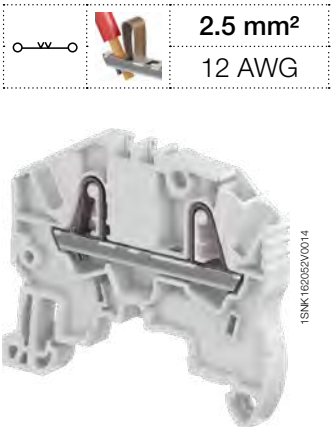

2.5 mm²
12 AWG

ZK2.5

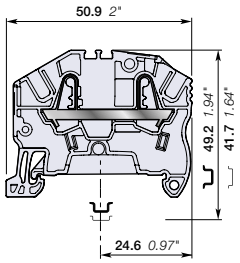

5.2 mm 0.205 in spacing

Description

Combine high performance with compact dimensions:
- 1000 V AC / DC IEC 600 V UL,
- Opt for the best marking visibility thanks to the up-front, flat marker zone, which lets you mark up to eight digits or increase the font size.

Ordering details

Description		Color	Type	Part Number		Pkg qty	Weight (1 pce) g
Feed-through	2 connections	Grey	ZK2.5	1SNK705010R0000		50	5.50
		Blue	ZK2.5-BL	1SNK705020R0000		50	5.50
		Orange	ZK2.5-OR	1SNK705030R0000		50	5.50
		Yellow	ZK2.5-YL	1SNK705060R0000		50	5.50
		Green	ZK2.5-GN	1SNK705061R0000		50	5.50
		Red	ZK2.5-RD	1SNK705062R0000		50	5.50
		White	ZK2.5-WH	1SNK705065R0000		50	5.50
		Black	ZK2.5-BK	1SNK705066R0000		50	5.50

Main technical data

Connecting capacity		IEC	UL - CSA
1 conductor per clamp	Rigid: Solid/Stranded	0.2 ... 4 mm²	26 ... 12 AWG
	Flexible without ferrule	0.22 ... 2.5 mm²	
	Flexible with non insulated ferrule	0.22 ... 2.5 mm²	26 ... 14 AWG
	Flexible with insulated ferrule	0.22 ... 2.5 mm²	26 ... 14 AWG
2 conductors per clamp	Flexible with twin ferrule	0.22 ... 0.5 mm²	26 ... 20 AWG
Rated current / Rated cross section		24 A / 2.5 mm²	20 A / 12 AWG
Rated short-time withstand current (1s)		300 A	396 A
Short Circuit Current Rating (with specific conditions)			100 kA
Rated voltage		1000 V	600 V
Impulse withstand voltage		8000 V	
Protection		IP20	NEMA 1
Increased safety Ex e		693 V 21 A IEC/EN 60079-7 - IM2 II 2 GD Ex eb I/IIC/IIIC	

Mounting instructions

Rail	TH 35-7.5, TH 35-15
Wire stripping length	11 mm 0.433 in
Tool (for flexible conductor without ferrule)	Flat screwdriver Ø 3.5 mm Ø 0.138 in

The connecting capacity data for one Rigid: Solid/Stranded, or one Flexible conductor (when applicable) is a mandatory information required by IEC, UL and CSA standards (Copper conductors). All other data are provided as supplementary information only. For more details, please consult our CB, UL or CSA certificates and technical datasheet available on http://www.TE.com

CE | CB | RoHS | USR CNR | CSA | EAC Ex | ATEX | IECEx | Haz Loc | BV | DNV

Accessories

	Description			Color	Type	Part Number		Pkg qty	Weight (1 pce) g
1	**End stops**	5.2 mm	0.205 in	Dark grey	BAZ1	1SNK900002R0000		50	5.30
2	**End sections**	2 mm	0.079 in	Dark grey	EK2.5	1SNK705910R0000		20	1.80
3	**Jumper bars**	2 poles	32 A (IEC)	Orange	JB5-2	1SNK905302R0000		50	1.30
		3 poles	32 A (IEC)		JB5-3	1SNK905303R0000		50	2.00
		4 poles	32 A (IEC)		JB5-4	1SNK905304R0000		50	2.70
		5 poles	32 A (IEC)		JB5-5	1SNK905305R0000		50	3.50
		10 poles	32 A (IEC)		JB5-10	1SNK905310R0000		30	7.10
		50 poles	32 A (IEC)		JB5-50	1SNK905350R0000		10	36.00
4	**Cross spacing jumpers**	3 poles	32 A (IEC)	Orange	JB85-3	1SNK900603R0000		10	2.80
5	**Circuit separators**	3 mm	0.118 in	Dark grey	CS-R2	1SNK900106R0000		20	3.80
6	**Test adapters**	For test plugs DIA 2 mm 0.079 in		Dark grey	TP2	1SNK900203R0000		20	1.70
		For test plugs DIA 4 mm 0.157 in			TP4	1SNK900205R0000		20	2.40
7	**Test connectors**	5.2 mm 0.205 in spacing		Dark grey	TC5	1SNK900200R0000		10	5.20
		End module, 5.2 mm 0.205 in			TC5-R1	1SNK900201R0000		10	5.20
8	**Shield connectors**				SHBP	1SNK900601R0000		20	4.10
9	**Terminal block markers**	Blank marker		White	MG-CPM 13 41790	1SNB041790R0512		1960	0.23
		Blank card			MC512	1SNK140000R0000		22	9.00
					MC512PA	1SNK149999R0000		20	10.00
		Universal wire markers holder		Grey	UMH	1SNK900611R0000		10	0.20

Complete list of accessories is indicated in the terminal block datasheet including end stops.
Some accessories such as jumper bars may modify the terminal block's ratings: Complete information available in the accessories section of the catalog.

Ground PI-Spring terminal blocks

Description		Color	Type	Part Number		Pkg qty	Weight (1 pce) g
Ground	Profile aligned with ZK2.5	Green-yellow	ZK2.5-PE	1SNK705150R0000		20	10.00

1SNK162023S0201

Technical data valid for copper conductors only.

ZK2.5-3P PI-Spring terminal blocks

Feed-through with 3 connections - 5.2 mm 0.205 in spacing

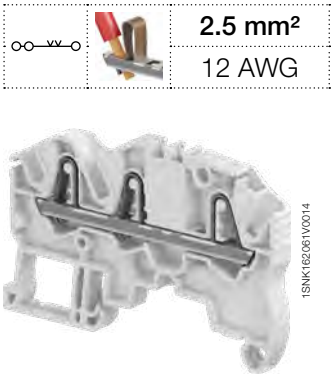

2.5 mm²
12 AWG

1SNK162061V0014

ZK2.5-3P

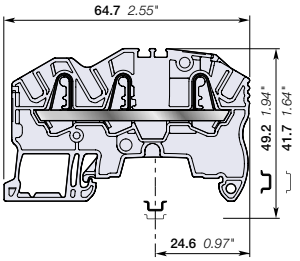

5.2 mm 0.205 in spacing

Description

Find all the features of the ZK2.5 terminal block with the added option of distributing or branching 3 conductors.

Ordering details

Description		Color	Type	Part Number		Pkg qty	Weight (1 pce) g
Feed-through	3 connections	Grey	ZK2.5-3P	1SNK705011R0000		50	7.40
		Blue	ZK2.5-3P-BL	1SNK705021R0000		50	7.40
		Orange	ZK2.5-3P-OR	1SNK705031R0000		50	7.40
		Yellow	ZK2.5-3P-YL	1SNK705067R0000		50	7.40
		Green	ZK2.5-3P-GN	1SNK705068R0000		50	7.40
		Red	ZK2.5-3P-RD	1SNK705069R0000		50	7.40
		White	ZK2.5-3P-WH	1SNK705072R0000		50	7.40
		Black	ZK2.5-3P-BK	1SNK705073R0000		50	7.40

Main technical data

Connecting capacity		IEC	UL - CSA
1 conductor per clamp	Rigid: Solid/Stranded	0.2 ... 4 mm²	26 ... 12 AWG
	Flexible without ferrule	0.22 ... 2.5 mm²	
	Flexible with non insulated ferrule	0.22 ... 2.5 mm²	26 ... 14 AWG
	Flexible with insulated ferrule	0.22 ... 2.5 mm²	26 ... 14 AWG
2 conductors per clamp	Flexible with twin ferrule	0.22 ... 0.5 mm²	26 ... 20 AWG
Rated current / Rated cross section		24 A / 2.5 mm²	20 A / 12 AWG
Rated short-time withstand current (1s)		300 A	396 A
Short Circuit Current Rating (with specific conditions)			100 kA
Rated voltage		1000 V	600 V
Impulse withstand voltage		8000 V	
Protection		IP20	NEMA 1
Increased safety Ex e		693 V 21 A IEC/EN 60079-7 - IM2 II 2 GD Ex eb I/IIC/IIIC	

Mounting instructions

Rail		TH 35-7.5, TH 35-15
Wire stripping length		11 mm 0.433 in
Tool (for flexible conductor without ferrule)		Flat screwdriver Ø 3.5 mm Ø 0.138 in

The connecting capacity data for one Rigid: Solid/Stranded, or one Flexible conductor (when applicable) is a mandatory information required by IEC, UL and CSA standards (Copper conductors). All other data are provided as supplementary information only. For more details, please consult our CB, UL or CSA certificates and technical datasheet available on http://www.TE.com

CE | CB | RoHS | USR CNR | CSA | EAC Ex | ATEX | IECEx | Haz Loc | BV | DNV

Accessories

	Description			Color	Type	Part Number		Pkg qty	Weight (1 pce) g
1	**End stops**	5.2 mm	0.205 in	Dark grey	BAZ1	1SNK900002R0000		50	5.30
2	**End sections**	2 mm	0.079 in	Dark grey	EK2.5-3P	1SNK705911R0000		20	2.40
3	**Jumper bars**	2 poles	32 A (IEC)	Orange	JB5-2	1SNK905302R0000		50	1.30
		3 poles	32 A (IEC)		JB5-3	1SNK905303R0000		50	2.00
		4 poles	32 A (IEC)		JB5-4	1SNK905304R0000		50	2.70
		5 poles	32 A (IEC)		JB5-5	1SNK905305R0000		50	3.50
		10 poles	32 A (IEC)		JB5-10	1SNK905310R0000		30	7.10
		50 poles	32 A (IEC)		JB5-50	1SNK905350R0000		10	36.00
4	**Cross spacing jumpers**	3 poles	32 A (IEC)	Orange	JB85-3	1SNK900603R0000		10	2.80
5	**Circuit separators**	3 mm	0.118 in	Dark grey	CS-R3	1SNK900107R0000		20	6.40
6	**Test adapters**	For test plugs DIA 2 mm 0.079 in		Dark grey	TP2	1SNK900203R0000		20	1.70
		For test plugs DIA 4 mm 0.157 in			TP4	1SNK900205R0000		20	2.40
7	**Test connectors**	5.2 mm 0.205 in spacing		Dark grey	TC5	1SNK900200R0000		10	5.20
		End module, 5.2 mm 0.205 in			TC5-R1	1SNK900201R0000		10	5.20
8	**Terminal block markers**	Blank marker		White	MG-CPM 13 41790	1SNB041790R0512		1960	0.23
		Blank card			MC512	1SNK140000R0000		22	9.00
					MC512PA	1SNK149999R0000		20	10.00
		Universal wire markers holder		Grey	UMH	1SNK900611R0000		10	0.20

Complete list of accessories is indicated in the terminal block datasheet including end stops.
Some accessories such as jumper bars may modify the terminal block's ratings: Complete information available in the accessories section of the catalog.

Ground PI-Spring terminal blocks

Description		Color	Type	Part Number		Pkg qty	Weight (1 pce) g
Ground	Profile aligned with ZK2.5-3P	Green-yellow	ZK2.5-PE-3P	1SNK705151R0000		20	11.90

1SNK162024S0201

Technical data valid for copper conductors only.

ZK2.5-4P PI-Spring terminal blocks

Feed-through with 4 connections - 5.2 mm 0.205 in spacing

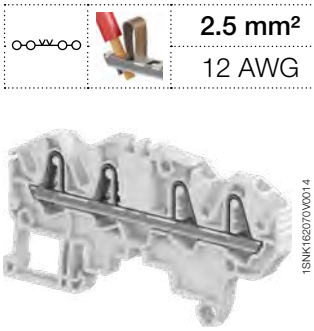

2.5 mm²
12 AWG

ZK2.5-4P

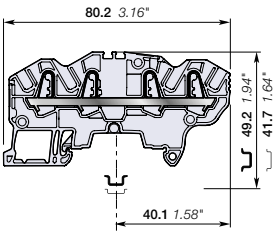

5.2 mm 0.205 in spacing

Description

Find all the features of the ZK2.5 terminal block with the added option of distributing or branching 4 conductors.

Ordering details

Description		Color	Type	Part Number		Pkg qty	Weight (1 pce) g
Feed-through	4 connections	Grey	ZK2.5-4P	1SNK705012R0000		50	9.00
		Blue	ZK2.5-4P-BL	1SNK705022R0000		50	9.00
		Orange	ZK2.5-4P-OR	1SNK705032R0000		50	9.00
		Yellow	ZK2.5-4P-YL	1SNK705074R0000		50	9.00
		Green	ZK2.5-4P-GN	1SNK705075R0000		50	9.00
		Red	ZK2.5-4P-RD	1SNK705076R0000		50	9.00
		White	ZK2.5-4P-WH	1SNK705079R0000		50	9.00
		Black	ZK2.5-4P-BK	1SNK705080R0000		50	9.00

Main technical data

Connecting capacity		IEC	UL - CSA
1 conductor per clamp	Rigid: Solid/Stranded	0.2 ... 4 mm²	26 ... 12 AWG
	Flexible without ferrule	0.22 ... 2.5 mm²	
	Flexible with non insulated ferrule	0.22 ... 2.5 mm²	26 ... 14 AWG
	Flexible with insulated ferrule	0.22 ... 2.5 mm²	26 ... 14 AWG
2 conductors per clamp	Flexible with twin ferrule	0.22 ... 0.5 mm²	26 ... 20 AWG
Rated current / Rated cross section		24 A / 2.5 mm²	20 A / 12 AWG
Rated short-time withstand current (1s)		300 A	396 A
Short Circuit Current Rating (with specific conditions)			100 kA
Rated voltage		1000 V	600 V
Impulse withstand voltage		8000 V	
Protection		IP20	NEMA 1
Increased safety Ex e		693 V 21 A IEC/EN 60079-7 - IM2 II 2 GD Ex eb I/IIC/IIIC	

Mounting instructions

Rail	TH 35-7.5, TH 35-15
Wire stripping length	11 mm 0.433 in
Tool (for flexible conductor without ferrule)	Flat screwdriver Ø 3.5 mm Ø 0.138 in

The connecting capacity data for one Rigid: Solid/Stranded, or one Flexible conductor (when applicable) is a mandatory information required by IEC, UL and CSA standards (Copper conductors). All other data are provided as supplementary information only. For more details, please consult our CB, UL or CSA certificates and technical datasheet available on http://www.TE.com

CE, CB, RoHS, USR CNR, CSA, EAC Ex, ATEX, IECEx, Haz Loc, BV, DNV

Accessories

	Description			Color	Type	Part Number		Pkg qty	Weight (1 pce) g
1	**End stops**	5.2 mm	0.205 in	Dark grey	BAZ1	1SNK900002R0000		50	5.30
2	**End sections**	2 mm	0.079 in	Dark grey	EK2.5-4P	1SNK705912R0000		20	2.70
3	**Jumper bars**	2 poles	32 A (IEC)	Orange	JB5-2	1SNK905302R0000		50	1.30
		3 poles	32 A (IEC)		JB5-3	1SNK905303R0000		50	2.00
		4 poles	32 A (IEC)		JB5-4	1SNK905304R0000		50	2.70
		5 poles	32 A (IEC)		JB5-5	1SNK905305R0000		50	3.50
		10 poles	32 A (IEC)		JB5-10	1SNK905310R0000		30	7.10
		50 poles	32 A (IEC)		JB5-50	1SNK905350R0000		10	36.00
4	**Cross spacing jumpers**	3 poles	32 A (IEC)	Orange	JB85-3	1SNK900603R0000		10	2.80
5	**Circuit separators**	3 mm	0.118 in	Dark grey	CS-R3	1SNK900107R0000		20	6.40
6	**Test adapters**	For test plugs DIA 2 mm 0.079 in		Dark grey	TP2	1SNK900203R0000		20	1.70
		For test plugs DIA 4 mm 0.157 in			TP4	1SNK900205R0000		20	2.40
7	**Test connectors**	5.2 mm 0.205 in spacing		Dark grey	TC5	1SNK900200R0000		10	5.20
		End module, 5.2 mm 0.205 in			TC5-R1	1SNK900201R0000		10	5.20
8	**Terminal block markers**	Blank marker		White	MG-CPM 13 41790	1SNB041790R0512		1960	0.23
		Blank card			MC512	1SNK140000R0000		22	9.00
					MC512PA	1SNK149999R0000		20	10.00
		Universal wire markers holder		Grey	UMH	1SNK900611R0000		10	0.20

Complete list of accessories is indicated in the terminal block datasheet including end stops.
Some accessories such as jumper bars may modify the terminal block's ratings: Complete information available in the accessories section of the catalog.

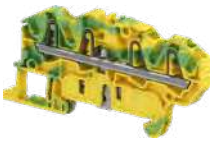

Ground PI-Spring terminal blocks

Description		Color	Type	Part Number		Pkg qty	Weight (1 pce) g
Ground	Profile aligned with ZK2.5-4P	Green-yellow	ZK2.5-PE-4P	1SNK705152R0000		20	13.60

1SNK162025S0201

Technical data valid for copper conductors only.

ZK4 PI-Spring terminal blocks
Feed-through - 6 mm 0.236 in spacing

ZK4

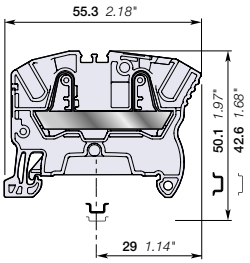

6 mm 0.236 in spacing

4 mm²
10 AWG

Description

Combine high performance with compact dimensions:
- 1000 V AC / DC IEC 600 V UL,
- Opt for the best marking visibility thanks to the up-front, flat marker zone, which lets you mark up to eight digits or increase the font size.

Ordering details

Description		Color	Type	Part Number		Pkg qty	Weight (1 pce) g
Feed-through	2 connections	Grey	ZK4	1SNK706010R0000		50	7.90
		Blue	ZK4-BL	1SNK706020R0000		50	7.90
		Orange	ZK4-OR	1SNK706030R0000		50	7.90
		Yellow	ZK4-YL	1SNK706060R0000		50	7.90
		Red	ZK4-RD	1SNK706062R0000		50	7.90
		Black	ZK4-BK	1SNK706066R0000		50	7.90

Main technical data

Connecting capacity		IEC	UL - CSA
1 conductor per clamp	Rigid: Solid/Stranded	0.5 ... 6 mm²	26 ... 10 AWG
	Flexible without ferrule	0.5 ... 4 mm²	
	Flexible with non insulated ferrule	0.5 ... 4 mm²	26 ... 12 AWG
	Flexible with insulated ferrule	0.5 ... 4 mm²	26 ... 12 AWG
2 conductors per clamp	Flexible with twin ferrule	0.5 ... 1 mm²	26 ... 18 AWG
Rated current / Rated cross section		32 A / 4 mm²	30 A / 10 AWG
Rated short-time withstand current (1s)		480 A	636 A
Short Circuit Current Rating (with specific conditions)			100 kA
Rated voltage		1000 V	600 V
Impulse withstand voltage		8000 V	
Protection		IP20	NEMA 1
Increased safety Ex e		693 V 29 A IEC/EN 60079-7 - IM2 II 2 GD Ex eb I/IIC/IIIC	

The connecting capacity data for one Rigid: Solid/Stranded, or one Flexible conductor (when applicable) is a mandatory information required by IEC, UL and CSA standards (Copper conductors). All other data are provided as supplementary information only. For more details, please consult our CB, UL or CSA certificates and technical datasheet available on http://www.TE.com

CE, CB, RoHS, USR CNR, CSA, EAC Ex, ATEX, IECEx, Haz Loc, BV, DNV

Mounting instructions

Rail	TH 35-7.5, TH 35-15
Wire stripping length	12.5 mm 0.492 in
Tool (for flexible conductor without ferrule)	Flat screwdriver Ø 3.5 mm Ø 0.138 in

Accessories

	Description			Color	Type	Part Number		Pkg qty	Weight (1 pce) g
1	**End stops**	5.2 mm	0.205 in	Dark grey	BAZ1	1SNK900002R0000		50	5.30
2	**End sections**	2 mm	0.079 in	Dark grey	EK2.5	1SNK705910R0000		20	1.80
3	**Jumper bars**	2 poles	41 A (IEC)	Orange	JB6-2	1SNK906302R0000		50	1.30
		3 poles	41 A (IEC)		JB6-3	1SNK906303R0000		50	2.10
		4 poles	41 A (IEC)		JB6-4	1SNK906304R0000		50	2.90
		5 poles	41 A (IEC)		JB6-5	1SNK906305R0000		50	3.60
		10 poles	41 A (IEC)		JB6-10	1SNK906310R0000		20	7.40
		50 poles	41 A (IEC)		JB6-50	1SNK906350R0000		10	38.10
4	**Cross spacing jumpers**	3 poles	32 A (IEC)	Orange	JB85-3	1SNK900603R0000		10	2.80
5	**Circuit separators**	3 mm	0.118 in	Dark grey	CS-R2	1SNK900106R0000		20	3.80
6	**Test adapters**	For test plugs DIA 2 mm 0.079 in		Dark grey	TP2	1SNK900203R0000		20	1.70
		For test plugs DIA 4 mm 0.157 in			TP4	1SNK900205R0000		20	2.40
7	**Test connectors**	End module, 5.2 mm 0.205 in		Dark grey	TC5-R1	1SNK900201R0000		10	5.20
8	**Spacers**	0.8 mm	0.031 in	Dark grey	ES-TC6	1SNK900105R0000		10	0.80
9	**Terminal block markers**	Blank marker		White	MG-CPM 13 41791	1SNB041791R0612		1680	0.27
		Blank card			MC612	1SNK150000R0000		22	10.00
					MC612PA	1SNK159999R0000		20	11.00
		Universal wire markers holder		Grey	UMH	1SNK900611R0000		10	0.20

Complete list of accessories is indicated in the terminal block datasheet including end stops.
Some accessories such as jumper bars may modify the terminal block's ratings: Complete information available in the accessories section of the catalog.

Ground PI-Spring terminal blocks

Description		Color	Type	Part Number		Pkg qty	Weight (1 pce) g
Ground	Profile aligned with ZK4	Green-yellow	ZK4-PE	1SNK706150R0000		20	12.60

1SNK162026S0201

Technical data valid for copper conductors only.

ZK4-3P PI-Spring terminal blocks

Feed-through with 3 connections - 6 mm 0.236 in spacing

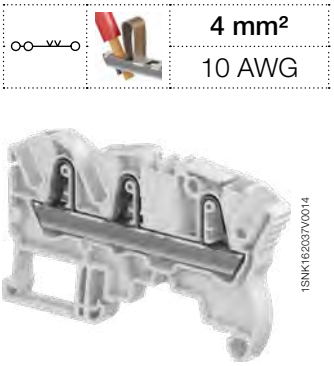

4 mm²	
10 AWG	

1SNK162037V0014

ZK4-3P

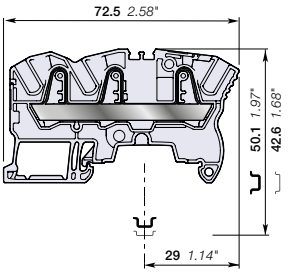

6 mm 0.236 in spacing

Description

Find all the features of the ZK4 terminal block with the added option of distributing or branching 3 conductors.

Ordering details

Description		Color	Type	Part Number		Pkg qty	Weight (1 pce) g
Feed-through	3 connections	Grey	ZK4-3P	1SNK706011R0000		50	11.00
		Blue	ZK4-3P-BL	1SNK706021R0000		50	11.00
		Orange	ZK4-3P-OR	1SNK706031R0000		50	11.00

Main technical data

Connecting capacity		IEC	UL - CSA
1 conductor per clamp	Rigid: Solid/Stranded	0.5 ... 6 mm²	26 ... 10 AWG
	Flexible without ferrule	0.5 ... 4 mm²	
	Flexible with non insulated ferrule	0.5 ... 4 mm²	26 ... 12 AWG
	Flexible with insulated ferrule	0.5 ... 4 mm²	26 ... 12 AWG
2 conductors per clamp	Flexible with twin ferrule	0.5 ... 1 mm²	26 ... 18 AWG
Rated current / Rated cross section		32 A / 4 mm²	30 A / 10 AWG
Rated short-time withstand current (1s)		480 A	636 A
Short Circuit Current Rating (with specific conditions)			100 kA
Rated voltage		1000 V	600 V
Impulse withstand voltage		8000 V	
Protection		IP20	NEMA 1
Increased safety Ex e		693 V 29 A IEC/EN 60079-7 - IM2 II 2 GD Ex eb I/IIC/IIIC	

Mounting instructions

Rail		TH 35-7.5, TH 35-15
Wire stripping length		12.5 mm 0.492 in
Tool (for flexible conductor without ferrule)		Flat screwdriver Ø 3.5 mm Ø 0.138 in

The connecting capacity data for one Rigid: Solid/Stranded, or one Flexible conductor (when applicable) is a mandatory information required by IEC, UL and CSA standards (Copper conductors). All other data are provided as supplementary information only. For more details, please consult our CB, UL or CSA certificates and technical datasheet available on http://www.TE.com

CE, CB, RoHS, USR CNR, CSA, EAC Ex, ATEX, IECEx, Haz Loc, BV, DNV

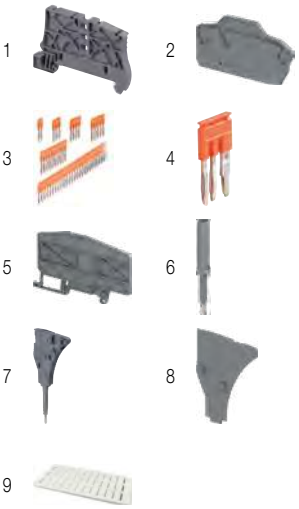

Accessories

	Description			Color	Type	Part Number		Pkg qty	Weight (1 pce) g
1	**End stops**	5.2 mm	0.205 in	Dark grey	BAZ1	1SNK900002R0000		50	5.30
2	**End sections**	2 mm	0.079 in	Dark grey	EK2.5-3P	1SNK705911R0000		20	2.40
3	**Jumper bars**	2 poles	41 A (IEC)	Orange	JB6-2	1SNK906302R0000		50	1.30
		3 poles	41 A (IEC)		JB6-3	1SNK906303R0000		50	2.10
		4 poles	41 A (IEC)		JB6-4	1SNK906304R0000		50	2.90
		5 poles	41 A (IEC)		JB6-5	1SNK906305R0000		50	3.60
		10 poles	41 A (IEC)		JB6-10	1SNK906310R0000		20	7.40
		50 poles	41 A (IEC)		JB6-50	1SNK906350R0000		10	38.10
4	**Cross spacing jumpers**	3 poles	32 A (IEC)	Orange	JB85-3	1SNK900603R0000		10	2.80
5	**Circuit separators**	3 mm	0.118 in	Dark grey	CS-R3	1SNK900107R0000		20	6.40
6	**Test adapters**	For test plugs DIA 2 mm 0.079 in		Dark grey	TP2	1SNK900203R0000		20	1.70
		For test plugs DIA 4 mm 0.157 in			TP4	1SNK900205R0000		20	2.40
7	**Test connectors**	End module, 5.2 mm 0.205 in		Dark grey	TC5-R1	1SNK900201R0000		10	5.20
8	**Spacers**	0.8 mm	0.031 in	Dark grey	ES-TC6	1SNK900105R0000		10	0.80
9	**Terminal block markers**	Blank marker		White	MG-CPM 13 41791	1SNB041791R0612		1680	0.27
		Blank card			MC612	1SNK150000R0000		22	10.00
					MC612PA	1SNK159999R0000		20	11.00
		Universal wire markers holder		Grey	UMH	1SNK900611R0000		10	0.20

Complete list of accessories is indicated in the terminal block datasheet including end stops.
Some accessories such as jumper bars may modify the terminal block's ratings: Complete information available in the accessories section of the catalog.

Ground PI-Spring terminal blocks

Description		Color	Type	Part Number		Pkg qty	Weight (1 pce) g
Ground	Profile aligned with ZK4-3P	Green-yellow	ZK4-PE-3P	1SNK706151R0000		20	15.70

1SNK162027S0201

Technical data valid for copper conductors only.

ZK4-4P PI-Spring terminal blocks

Feed-through with 4 connections - 6 mm 0.236 in spacing

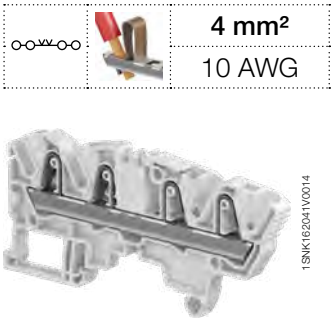

ZK4-4P

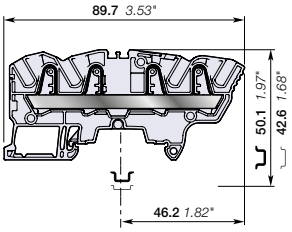

6 mm 0.236 in spacing

	4 mm²
	10 AWG

Description

Find all the features of the ZK4 terminal block with the added option of distributing or branching 4 conductors.

Ordering details

Description		Color	Type	Part Number		Pkg qty	Weight (1 pce) g
Feed-through	4 connections	Grey	ZK4-4P	1SNK706012R0000		50	13.80
		Blue	ZK4-4P-BL	1SNK706022R0000		50	13.80
		Orange	ZK4-4P-OR	1SNK706032R0000		50	13.80

Main technical data

Connecting capacity		IEC	UL - CSA
1 conductor per clamp	Rigid: Solid/Stranded	0.5 ... 6 mm²	26 ... 10 AWG
	Flexible without ferrule	0.5 ... 4 mm²	
	Flexible with non insulated ferrule	0.5 ... 4 mm²	26 ... 12 AWG
	Flexible with insulated ferrule	0.5 ... 4 mm²	26 ... 12 AWG
2 conductors per clamp	Flexible with twin ferrule	0.5 ... 1 mm²	26 ... 18 AWG
Rated current / Rated cross section		32 A / 4 mm²	30 A / 10 AWG
Rated short-time withstand current (1s)		480 A	636 A
Short Circuit Current Rating (with specific conditions)			100 kA
Rated voltage		1000 V	600 V
Impulse withstand voltage		8000 V	
Protection		IP20	NEMA 1
Increased safety Ex e		693 V 29 A IEC/EN 60079-7 - IM2 II 2 GD Ex eb I/IIC/IIIC	

Mounting instructions

Rail		TH 35-7.5, TH 35-15
Wire stripping length		12.5 mm 0.492 in
Tool (for flexible conductor without ferrule)		Flat screwdriver Ø 3.5 mm Ø 0.138 in

The connecting capacity data for one Rigid: Solid/Stranded, or one Flexible conductor (when applicable) is a mandatory information required by IEC, UL and CSA standards (Copper conductors). All other data are provided as supplementary information only. For more details, please consult our CB, UL or CSA certificates and technical datasheet available on http://www.TE.com

CE, CB, RoHS, USR CNR, CSA, EAC Ex, ATEX, IECEx, Haz Loc, BV, DNV

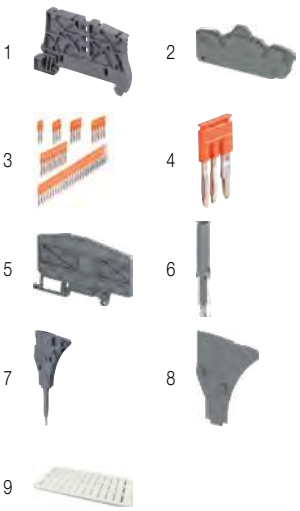

Accessories

	Description			Color	Type	Part Number		Pkg qty	Weight (1 pce) g
1	**End stops**	5.2 mm	0.205 in	Dark grey	BAZ1	1SNK900002R0000		50	5.30
2	**End sections**	2 mm	0.079 in	Dark grey	EK2.5-4P	1SNK705912R0000		20	2.70
3	**Jumper bars**	2 poles	41 A (IEC)	Orange	JB6-2	1SNK906302R0000		50	1.30
		3 poles	41 A (IEC)		JB6-3	1SNK906303R0000		50	2.10
		4 poles	41 A (IEC)		JB6-4	1SNK906304R0000		50	2.90
		5 poles	41 A (IEC)		JB6-5	1SNK906305R0000		50	3.60
		10 poles	41 A (IEC)		JB6-10	1SNK906310R0000		20	7.40
		50 poles	41 A (IEC)		JB6-50	1SNK906350R0000		10	38.10
4	**Cross spacing jumpers**	3 poles	32 A (IEC)	Orange	JB85-3	1SNK900603R0000		10	2.80
5	**Circuit separators**	3 mm	0.118 in	Dark grey	CS-R3	1SNK900107R0000		20	6.40
6	**Test adapters**	For test plugs DIA 2 mm 0.079 in		Dark grey	TP2	1SNK900203R0000		20	1.70
		For test plugs DIA 4 mm 0.157 in			TP4	1SNK900205R0000		20	2.40
7	**Test connectors**	End module, 5.2 mm 0.205 in		Dark grey	TC5-R1	1SNK900201R0000		10	5.20
8	**Spacers**	0.8 mm	0.031 in	Dark grey	ES-TC6	1SNK900105R0000		10	0.80
9	**Terminal block markers**	Blank marker		White	MG-CPM 13 41791	1SNB041791R0612		1680	0.27
		Blank card			MC612	1SNK150000R0000		22	10.00
					MC612PA	1SNK159999R0000		20	11.00
		Universal wire markers holder		Grey	UMH	1SNK900611R0000		10	0.20

Complete list of accessories is indicated in the terminal block datasheet including end stops.
Some accessories such as jumper bars may modify the terminal block's ratings: Complete information available in the accessories section of the catalog.

Ground PI-Spring terminal blocks

Description		Color	Type	Part Number		Pkg qty	Weight (1 pce) g
Ground	Profile aligned with ZK4-4P	Green-yellow	ZK4-PE-4P	1SNK706152R0000		20	18.40

1SNK162028S0201

Technical data valid for copper conductors only.

ZK6 PI-Spring terminal blocks
Feed-through - 8 mm 0.315 in spacing

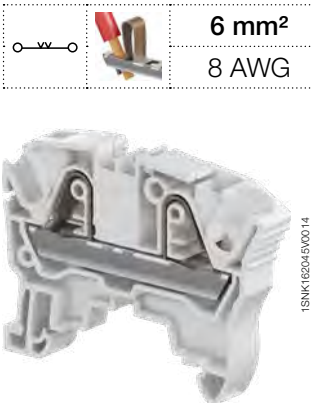

ZK6

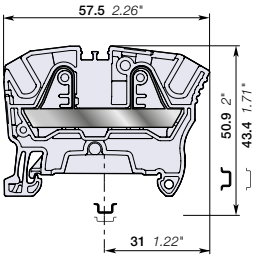

8 mm 0.315 in spacing

	6 mm²
	8 AWG

Description

Combine high performance with compact dimensions:
- 1000 V AC / DC IEC 600 V UL,
- Opt for the best marking visibility thanks to the up-front, flat marker zone, which lets you mark up to eight digits or increase the font size.

Ordering details

Description		Color	Type	Part Number		Pkg qty	Weight (1 pce) g
Feed-through	2 connections	Grey	ZK6	1SNK708010R0000		50	11.80
		Blue	ZK6-BL	1SNK708020R0000		50	11.80
		Orange	ZK6-OR	1SNK708030R0000		50	11.80
		Yellow	ZK6-YL	1SNK708060R0000		50	11.80
		Red	ZK6-RD	1SNK708062R0000		50	11.80
		Black	ZK6-BK	1SNK708066R0000		50	11.80

Main technical data

Connecting capacity		IEC	UL - CSA
1 conductor per clamp	Rigid: Solid/Stranded	0.5 ... 10 mm²	24 ... 8 AWG
	Flexible without ferrule	0.5 ... 6 mm²	
	Flexible with non insulated ferrule	0.5 ... 6 mm²	24 ... 10 AWG
	Flexible with insulated ferrule	0.5 ... 6 mm²	24 ... 10 AWG
2 conductors per clamp	Flexible with twin ferrule	0.5 ... 1.5 mm²	24 ... 16 AWG
Rated current / Rated cross section		41 A / 6 mm²	50 A / 8 AWG
Rated short-time withstand current (1s)		720 A	1008 A
Short Circuit Current Rating (with specific conditions)			100 kA
Rated voltage		1000 V	600 V
Impulse withstand voltage		8000 V	
Protection		IP20	NEMA 1
Increased safety Ex e		693 V 37 A IEC/EN 60079-7 - IM2 II 2 GD Ex eb I/IIC/IIIC	

The connecting capacity data for one Rigid: Solid/Stranded, or one Flexible conductor (when applicable) is a mandatory information required by IEC, UL and CSA standards (Copper conductors). All other data are provided as supplementary information only. For more details, please consult our CB, UL or CSA certificates and technical datasheet available on http://www.TE.com

CE, CB, RoHS, USR CNR, CSA, EAC Ex, ATEX, IECEx, Haz Loc, BV, DNV

Mounting instructions

Rail	TH 35-7.5, TH 35-15
Wire stripping length	12.5 mm 0.492 in
Tool (for flexible conductor without ferrule)	Flat screwdriver Ø 3.5 mm Ø 0.138 in

Accessories

	Description			Color	Type	Part Number		Pkg qty	Weight (1 pce) g
1	**End stops**	5.2 mm	0.205 in	Dark grey	BAZ1	1SNK900002R0000		50	5.30
2	**End sections**	2 mm	0.079 in	Dark grey	EK2.5	1SNK705910R0000		20	1.80
3	**Jumper bars**	2 poles	57 A (IEC)	Orange	JB8-2	1SNK908302R0000		50	2.70
		3 poles	57 A (IEC)		JB8-3	1SNK908303R0000		50	4.10
		4 poles	57 A (IEC)		JB8-4	1SNK908304R0000		50	5.60
		5 poles	57 A (IEC)		JB8-5	1SNK908305R0000		40	7.00
		10 poles	57 A (IEC)		JB8-10	1SNK908310R0000		20	14.20
4	**Cross spacing jumpers**	3 poles	32 A (IEC)	Orange	JB85-3	1SNK900603R0000		10	2.80
5	**Circuit separators**	3 mm	0.118 in	Dark grey	CS-R2	1SNK900106R0000		20	3.80
6	**Test adapters**	For test plugs DIA 2 mm 0.079 in		Dark grey	TP2	1SNK900203R0000		20	1.70
		For test plugs DIA 4 mm 0.157 in			TP4	1SNK900205R0000		20	2.40
7	**Test connectors**	End module, 5.2 mm 0.205 in		Dark grey	TC5-R1	1SNK900201R0000		10	5.20
8	**Spacers**	2.8 mm	0.110 in	Dark grey	ES-TC8	1SNK900104R0000		10	1.40
9	**Terminal block markers**	Blank marker		White	MG-CPM 13 41791	1SNB041791R0612		1680	0.27
		Blank card			MC812	1SNK160000R0000		22	10.00
					MC812PA	1SNK169999R0000		20	14.00
		Universal wire markers holder		Grey	UMH	1SNK900611R0000		10	0.20

Complete list of accessories is indicated in the terminal block datasheet including end stops.
Some accessories such as jumper bars may modify the terminal block's ratings: Complete information available in the accessories section of the catalog.

Ground PI-Spring terminal blocks

Description		Color	Type	Part Number		Pkg qty	Weight (1 pce) g
Ground	Profile aligned with ZK6	Green-yellow	ZK6-PE	1SNK708150R0000		20	20.30

1SNK162029S0201

Technical data valid for copper conductors only.

ZK6-3P PI-Spring terminal blocks

Feed-through with 3 connections - 8 mm 0.315 in spacing

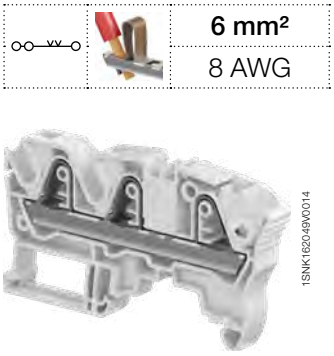

1SNK162049V0014

ZK6-3P

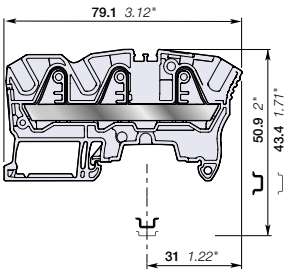

8 mm 0.315 in spacing

	6 mm²
	8 AWG

Description

Find all the features of the ZK6 terminal block with the added option of distributing or branching 3 conductors.

Ordering details

Description		Color	Type	Part Number		Pkg qty	Weight (1 pce) g
Feed-through	3 connections	Grey	ZK6-3P	1SNK708011R0000		50	16.70
		Blue	ZK6-3P-BL	1SNK708021R0000		50	16.70
		Orange	ZK6-3P-OR	1SNK708031R0000		50	16.70

Main technical data

Connecting capacity		IEC	UL - CSA
1 conductor per clamp	Rigid: Solid/Stranded	0.5 ... 10 mm²	24 ... 8 AWG
	Flexible without ferrule	0.5 ... 6 mm²	
	Flexible with non insulated ferrule	0.5 ... 6 mm²	24 ... 10 AWG
	Flexible with insulated ferrule	0.5 ... 6 mm²	24 ... 10 AWG
2 conductors per clamp	Flexible with twin ferrule	0.5 ... 1.5 mm²	24 ... 16 AWG
Rated current / Rated cross section		41 A / 6 mm²	50 A / 8 AWG
Rated short-time withstand current (1s)		720 A	1008 A
Short Circuit Current Rating (with specific conditions)			100 kA
Rated voltage		1000 V	600 V
Impulse withstand voltage		8000 V	
Protection		IP20	NEMA 1
Increased safety Ex e		693 V 37 A IEC/EN 60079-7 - IM2 II 2 GD Ex eb I/IIC/IIIC	

Mounting instructions

Rail	TH 35-7.5, TH 35-15
Wire stripping length	12.5 mm 0.492 in
Tool (for flexible conductor without ferrule)	Flat screwdriver Ø 3.5 mm Ø 0.138 in

The connecting capacity data for one Rigid: Solid/Stranded, or one Flexible conductor (when applicable) is a mandatory information required by IEC, UL and CSA standards (Copper conductors). All other data are provided as supplementary information only. For more details, please consult our CB, UL or CSA certificates and technical datasheet available on http://www.TE.com

CE, CB, RoHS, USR CNR, CSA, EAC Ex, ATEX, IECEx, Haz Loc, BV, DNV

Accessories

	Description			Color	Type	Part Number		Pkg qty	Weight (1 pce) g
1	**End stops**	5.2 mm	0.205 in	Dark grey	BAZ1	1SNK900002R0000		50	5.30
2	**End sections**	2 mm	0.079 in	Dark grey	EK6-3P	1SNK708911R0000		20	2.80
3	**Jumper bars**	2 poles	57 A (IEC)	Orange	JB8-2	1SNK908302R0000		50	2.70
		3 poles	57 A (IEC)		JB8-3	1SNK908303R0000		50	4.10
		4 poles	57 A (IEC)		JB8-4	1SNK908304R0000		50	5.60
		5 poles	57 A (IEC)		JB8-5	1SNK908305R0000		40	7.00
		10 poles	57 A (IEC)		JB8-10	1SNK908310R0000		20	14.20
4	**Cross spacing jumpers**	3 poles	32 A (IEC)	Orange	JB85-3	1SNK900603R0000		10	2.80
5	**Circuit separators**	3 mm	0.118 in	Dark grey	CS-R3	1SNK900107R0000		20	6.40
6	**Test adapters**	For test plugs DIA 2 mm 0.079 in		Dark grey	TP2	1SNK900203R0000		20	1.70
		For test plugs DIA 4 mm 0.157 in			TP4	1SNK900205R0000		20	2.40
7	**Test connectors**	End module, 5.2 mm 0.205 in		Dark grey	TC5-R1	1SNK900201R0000		10	5.20
8	**Spacers**	2.8 mm	0.110 in	Dark grey	ES-TC8	1SNK900104R0000		10	1.40
9	**Terminal block markers**	Blank marker		White	MG-CPM 13 41791	1SNB041791R0612		1680	0.27
		Blank card			MC812	1SNK160000R0000		22	10.00
					MC812PA	1SNK169999R0000		20	14.00
		Universal wire markers holder		Grey	UMH	1SNK900611R0000		10	0.20

Complete list of accessories is indicated in the terminal block datasheet including end stops.
Some accessories such as jumper bars may modify the terminal block's ratings: Complete information available in the accessories section of the catalog.

Ground PI-Spring terminal blocks

Description		Color	Type	Part Number		Pkg qty	Weight (1 pce) g
Ground	Profile aligned with ZK6-3P	Green-yellow	ZK6-PE-3P	1SNK708151R0000		20	21.50

1SNK162030S0201

Technical data valid for copper conductors only.

ZK10 PI-Spring terminal blocks
Feed-through - 10 mm 0.394 in spacing

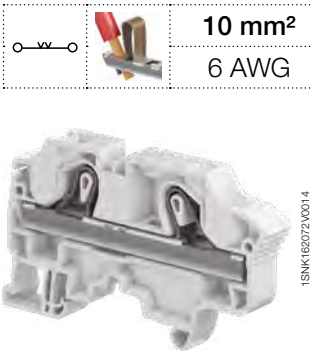

ZK10

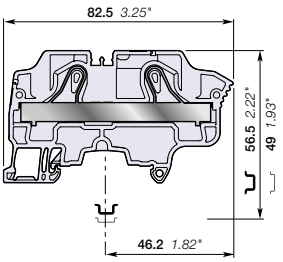

10 mm 0.394 in spacing

10 mm²
6 AWG

Description

Combine high performance with compact dimensions:
- 1000 V AC / DC IEC 600 V UL,
- Opt for the best marking visibility thanks to the up-front, flat marker zone, which lets you mark up to eight digits or increase the font size.

Ordering details

Description		Color	Type	Part Number		Pkg qty	Weight (1 pce) g
Feed-through	2 connections	Grey	ZK10	1SNK710010R0000		20	27.20
		Blue	ZK10-BL	1SNK710020R0000		20	27.20
		Orange	ZK10-OR	1SNK710030R0000		20	27.20

Main technical data

Connecting capacity		IEC	UL - CSA
1 conductor per clamp	Rigid: Solid/Stranded	0.5 ... 16 mm²	20 ... 6 AWG
	Flexible without ferrule	0.5 ... 10 mm²	
	Flexible with non insulated ferrule	0.5 ... 10 mm²	20 ... 8 AWG
	Flexible with insulated ferrule	0.5 ... 10 mm²	20 ... 8 AWG
2 conductors per clamp	Flexible with twin ferrule	0.5 ... 4 mm²	20 ... 12 AWG
Rated current / Rated cross section		57 A / 10 mm²	55 A / 6 AWG
Rated short-time withstand current (1s)		1200 A	1596 A
Short Circuit Current Rating (with specific conditions)			100 kA
Rated voltage		1000 V	600 V
Impulse withstand voltage		8000 V	
Protection		IP20	NEMA 1
Increased safety Ex e		693 V 51 A IEC/EN 60079-7 - IM2 II 2 GD Ex eb I/IIC/IIIC	

Mounting instructions

Rail	TH 35-7.5, TH 35-15
Wire stripping length	15 mm 0.591 in
Tool (for flexible conductor without ferrule)	Flat screwdriver Ø 4 mm Ø 0.157 in

The connecting capacity data for one Rigid: Solid/Stranded, or one Flexible conductor (when applicable) is a mandatory information required by IEC, UL and CSA standards (Copper conductors). All other data are provided as supplementary information only. For more details, please consult our CB, UL or CSA certificates and technical datasheet available on http://www.TE.com

CE, CB, RoHS, USR CNR, CSA, EAC Ex, ATEX, IECEx, Haz Loc, BV, DNV

Accessories

	Description			Color	Type	Part Number		Pkg qty	Weight (1 pce) g
1	**End stops**	5.2 mm	0.205 in	Dark grey	BAZ1	1SNK900002R0000		50	5.30
2	**End sections**	2 mm	0.079 in	Dark grey	EK10	1SNK710910R0000		20	3.30
3	**Jumper bars**	2 poles	76 A (IEC)	Orange	JB10-2	1SNK910302R0000		50	4.60
		3 poles	76 A (IEC)		JB10-3	1SNK910303R0000		50	7.10
		4 poles	76 A (IEC)		JB10-4	1SNK910304R0000		40	9.40
		5 poles	76 A (IEC)		JB10-5	1SNK910305R0000		30	12.00
		10 poles	76 A (IEC)		JB10-10	1SNK910310R0000		20	24.00
4	**Circuit separators**	3 mm	0.118 in	Dark grey	CS-R3	1SNK900107R0000		20	6.40
5	**Test adapters**	For test plugs DIA 2 mm 0.079 in		Dark grey	TP2	1SNK900203R0000		20	1.70
		For test plugs DIA 4 mm 0.157 in			TP4	1SNK900205R0000		20	2.40
6	**Terminal block markers**	Blank marker		White	MG-CPM 13 41791	1SNB041791R0612		1680	0.27
		Blank card			MC812	1SNK160000R0000		22	10.00
					MC812PA	1SNK169999R0000		20	14.00
		Universal wire markers holder		Grey	UMH	1SNK900611R0000		10	0.20

Complete list of accessories is indicated in the terminal block datasheet including end stops.
Some accessories such as jumper bars may modify the terminal block's ratings: Complete information available in the accessories section of the catalog.

Ground PI-Spring terminal blocks

Description		Color	Type	Part Number		Pkg qty	Weight (1 pce) g
Ground	Profile aligned with ZK10	Green-yellow	ZK10-PE	1SNK710150R0000		20	36.20

1SNK162031S0201

Technical data valid for copper conductors only.

ZK10-PV PI-Spring terminal blocks
Feed-through - 12 mm 0.472 in spacing

10 mm²
6 AWG

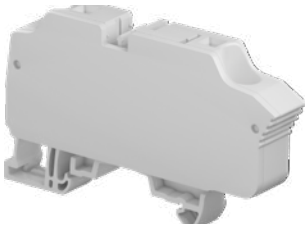
1SNK162124V0014

ZK10-PV

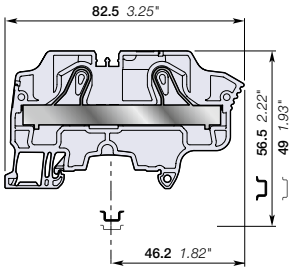

12 mm 0.472 in spacing

Description
Specially designed for high voltage utility scale solar power plants:
- Rated voltage of 1500 V DC IEC and 1000 V DC UL,
- Pre-mounted end section with light grey color specific to this application,
- Improved design with ribs to increase creepage distance,
- Compact solution only 2 mm thicker than normal product,
- Compatible with JB12 jumpers to interconnect multiple terminal blocks.

Ordering details

Description		Color	Type	Part Number		Pkg qty	Weight (1 pce) g
Feed-through	2 connections	Grey	ZK10-PV	1SNK710063R0000		20	29.86
		Blue	ZK10-PV-BL	1SNK710065R0000		20	29.86

Main technical data

Connecting capacity		IEC	UL - CSA
1 conductor per clamp	Rigid: Solid/Stranded	0.5 ... 16 mm²	20 ... 6 AWG
	Flexible without ferrule	0.5 ... 10 mm²	
	Flexible with non insulated ferrule	0.5 ... 10 mm²	20 ... 8 AWG
	Flexible with insulated ferrule	0.5 ... 10 mm²	20 ... 8 AWG
2 conductors per clamp	Flexible with twin ferrule	0.5 ... 4 AWG	20 ... 12 AWG
Rated current / Rated cross section		57 A / 10 mm²	55 A / 6 AWG
Rated short-time withstand current (1s)		1200 A	1596 A
Short Circuit Current Rating (with specific conditions)			100 kA
Rated voltage		1000 V AC / 1500 V DC	1000 V
Impulse withstand voltage		8000 V	
Protection		IP20	NEMA 1

Mounting instructions

Rail		TH 35-7.5, TH 35-15
Wire stripping length		15 mm 0.591 in
Tool (for flexible conductor without ferrule)		Flat screwdriver Ø 4 mm Ø 0.157 in

The connecting capacity data for one Rigid: Solid/Stranded, or one Flexible conductor (when applicable) is a mandatory information required by IEC, UL and CSA standards (Copper conductors). All other data are provided as supplementary information only. For more details, please consult our CB, UL or CSA certificates and technical datasheet available on http://www.TE.com

CE CB RoHS USR CNR CSA EAC

Accessories

	Description			Color	Type	Part Number		Pkg qty	Weight (1 pce) g
1	**End stops**	5.2 mm	0.205 in	Dark grey	BAZ1	1SNK900002R0000		50	5.30
2	**Jumper bars**	2 poles	76 A (IEC)	Orange	JB12-2	1SNK912302R0000		50	4.90
		3 poles	76 A (IEC)		JB12-3	1SNK912303R0000		50	7.60
		5 poles	76 A (IEC)		JB12-5	1SNK912305R0000		20	12.90
3	**Circuit separators**	3 mm	0.118 in	Dark grey	CS-R3	1SNK900107R0000		20	6.40
4	**Test adapters**	For test plugs DIA 2 mm 0.079 in		Dark grey	TP2	1SNK900203R0000		20	1.70
		For test plugs DIA 4 mm 0.157 in			TP4	1SNK900205R0000		20	2.40
5	**Terminal block markers**	Blank card		White	MC812	1SNK160000R0000		22	10.00
					MC812PA	1SNK169999R0000		20	14.00
		Blank marker			MG-CPM 13 41791	1SNB041791R0612		1680	0.273
		Universal wire markers holder		Grey	UMH	1SNK900611R0000		10	0.20

Complete list of accessories is indicated in the terminal block datasheet including end stops. Some accessories such as jumper bars may modify the terminal block's ratings: Complete information available in the accessories section of the catalog.

Ground PI-Spring terminal blocks

Description		Color	Type	Part Number		Pkg qty	Weight (1 pce) g
Ground	Profile aligned with ZK10	Green-yellow	ZK10-PE	1SNK710150R0000		20	36.20

1SNK162080S0201

Technical data valid for copper conductors only.

ZK10-3P PI-Spring terminal blocks

Feed-through with 3 connections - 10 mm 0.394 in spacing

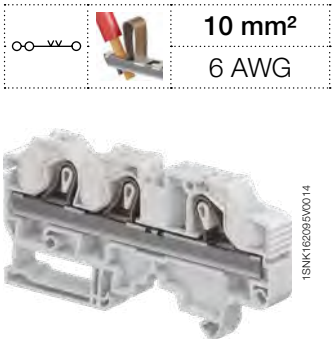

10 mm²
6 AWG

1SNK162095V0014

ZK10-3P

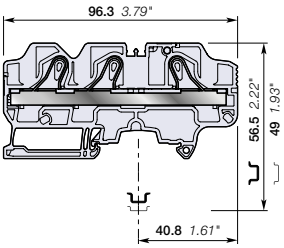

10 mm 0.394 in spacing

Description

- Find all the features of the ZK10 terminal block with the added option of distributing or branching 3 conductors,
- ZK10-3P is perfectly adapted to solar applications: 1250 V DC (1000 V AC) IEC, 1000 V UL.

Ordering details

Description		Color	Type	Part Number		Pkg qty	Weight (1 pce) g
Feed-through	3 connections	Grey	ZK10-3P	1SNK710011R0000		20	34.9
		Blue	ZK10-3P-BL	1SNK710021R0000		20	34.9

Main technical data

Connecting capacity		IEC	UL - CSA
1 conductor per clamp	Rigid: Solid/Stranded	0.5 ... 16 mm²	20 ... 6 AWG
	Flexible without ferrule	0.5 ... 10 mm²	
	Flexible with non insulated ferrule	0.5 ... 10 mm²	20 ... 8 AWG
	Flexible with insulated ferrule	0.5 ... 10 mm²	20 ... 8 AWG
2 conductors per clamp	Flexible with twin ferrule	0.5 ... 4 mm²	20 ... 12 AWG
Rated current / Rated cross section		57 A / 10 mm²	56 A / 6 AWG
Rated short-time withstand current (1s)		1200 A	
Short Circuit Current Rating (with specific conditions)			100 kA
Rated voltage		1000 V	1000 V
Impulse withstand voltage		8000 V	
Protection		IP20	NEMA 1
Increased safety Ex e		693 V 57 A - IM2 II 2 GD Ex eb I/II/IIIC	

Mounting instructions

Rail		TH 35-7.5, TH 35-15
Wire stripping length		15 mm 0.591 in
Tool (for flexible conductor without ferrule)		Flat screwdriver Ø 4 mm Ø 0.157 in

The connecting capacity data for one Rigid: Solid/Stranded, or one Flexible conductor (when applicable) is a mandatory information required by IEC, UL and CSA standards (Copper conductors).
All other data are provided as supplementary information only. For more details, please consult our CB, UL or CSA certificates and technical datasheet available on http://www.TE.com

CE, CB, RoHS, USR CNR, CSA, EAC Ex, ATEX, IECEx, BV

2

Accessories

	Description			Color	Type	Part Number		Pkg qty	Weight (1 pce) g
1	**End stops**	5.2 mm	0.205 in	Dark grey	BAZ1	1SNK900002R0000		50	5.30
2	**End sections**	2 mm	0.079 in	Dark grey	EK10-3P	1SNK710911R0000		20	4.5
3	**Jumper bars**	2 poles	76 A (IEC)	Orange	JB10-2	1SNK910302R0000		50	4.60
		3 poles	76 A (IEC)		JB10-3	1SNK910303R0000		50	7.10
		4 poles	76 A (IEC)		JB10-4	1SNK910304R0000		40	9.40
		5 poles	76 A (IEC)		JB10-5	1SNK910305R0000		30	12.00
		10 poles	76 A (IEC)		JB10-10	1SNK910310R0000		20	24.00
4	**Test adapters**	For test plugs DIA 2 mm 0.079 in		Dark grey	TP2	1SNK900203R0000		20	1.70
		For test plugs DIA 4 mm 0.157 in			TP4	1SNK900205R0000		20	2.40
5	**Terminal block markers**	Blank marker		White	MG-CPM 13 41791	1SNB041791R0612		1680	0.27
		Blank card			MC812	1SNK160000R0000		22	10.00
					MC812PA	1SNK169999R0000		20	14.00
		Universal wire markers holder		Grey	UMH	1SNK900611R0000		10	0.20

Complete list of accessories is indicated in the terminal block datasheet including end stops.
Some accessories such as jumper bars may modify the terminal block's ratings: Complete information available in the accessories section of the catalog.

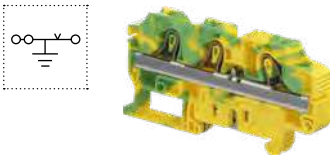

Ground PI-Spring terminal blocks

Description		Color	Type	Part Number		Pkg qty	Weight (1 pce) g
Ground	Profile aligned with ZK10-3P	Green-yellow	ZK10-PE-3P	1SNK710151R0000		20	43.3

1SNK162061S0201

Technical data valid for copper conductors only.

ZK10-3P-PV PI-Spring terminal blocks

Feed-through with 3 connections - 12 mm 0.472 in spacing

10 mm²

6 AWG

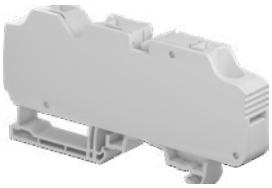

ZK10-3P-PV

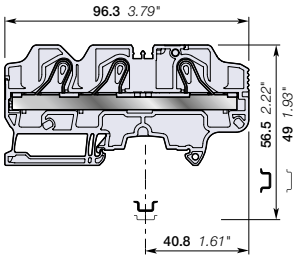

12 mm 0.472 in spacing

Description

Specially designed for high voltage utility scale solar power plants:

- Rated voltage of 1500 V DC IEC and 1000 V DC UL,
- Pre-mounted end section with light grey color specific to this application,
- Improved design with ribs to increase creepage distance,
- Compact solution only 2 mm thicker than normal product,
- 3 connections configuration for easy grouping: 2 inputs / 1 output or 1 input / 2 outputs,
- Compatible with JB12 jumpers to interconnect multiple terminal blocks.

Description		Color	Type	Part Number		Pkg qty	Weight (1 pce) g
Feed-through	3 connections	Grey	ZK10-3P-PV	1SNK710064R0000		20	38.61
		Blue	ZK10-3P-PV-BL	1SNK710067R0000		20	38.61

Main technical data

Connecting capacity		IEC	UL - CSA
1 conductor per clamp	Rigid: Solid/Stranded	0.5 ... 16 mm²	20 ... 6 AWG
	Flexible without ferrule	0.5 ... 10 mm²	
	Flexible with non insulated ferrule	0.5 ... 10 mm²	20 ... 8 AWG
	Flexible with insulated ferrule	0.5 ... 10 mm²	20 ... 8 AWG
2 conductors per clamp	Flexible with twin ferrule	0.5 ... 4 AWG	20 ... 12 AWG
Rated current / Rated cross section		57 A / 10 mm²	56 A / 6 AWG
Rated short-time withstand current (1s)		1200 A	1596 A
Short Circuit Current Rating (with specific conditions)			100 kA
Rated voltage		1000 V AC / 1500 V DC	1000 V
Impulse withstand voltage		8000 V	
Protection		IP20	NEMA 1

Mounting instructions

Rail		TH 35-7.5, TH 35-15
Wire stripping length		15 mm 0.591 in
Tool (for flexible conductor without ferrule)		Flat screwdriver Ø 4 mm Ø 0.157 in

The connecting capacity data for one Rigid: Solid/Stranded, or one Flexible conductor (when applicable) is a mandatory information required by IEC, UL and CSA standards (Copper conductors). All other data are provided as supplementary information only. For more details, please consult our CB, UL or CSA certificates and technical datasheet available on http://www.TE.com

CE CB RoHS USR CNR CSA EAC

Accessories

	Description			Color	Type	Part Number		Pkg qty	Weight (1 pce) g
1	End stops	5.2 mm	0.205 in	Dark grey	BAZ1	1SNK900002R0000		50	5.30
2	Jumper bars	2 poles	76 A (IEC)	Orange	JB12-2	1SNK912302R0000		50	4.90
		3 poles	76 A (IEC)		JB12-3	1SNK912303R0000		50	7.60
		5 poles	76 A (IEC)		JB12-5	1SNK912305R0000		20	12.90
3	Circuit separators	3 mm	0.118 in	Dark grey	CS-R3	1SNK900107R0000		20	6.40
4	Test adapters	For test plugs DIA 2 mm 0.079 in		Dark grey	TP2	1SNK900203R0000		20	1.70
		For test plugs DIA 4 mm 0.157 in			TP4	1SNK900205R0000		20	2.40
5	Terminal block markers	Blank card		White	MC812	1SNK160000R0000		22	10.00
					MC812PA	1SNK169999R0000		20	14.00
		Blank marker			MG-CPM 13 41791	1SNB041791R0612		1680	0.273
		Universal wire markers holder		Grey	UMH	1SNK900611R0000		10	0.20

Complete list of accessories is indicated in the terminal block datasheet including end stops. Some accessories such as jumper bars may modify the terminal block's ratings: Complete information available in the accessories section of the catalog.

Ground PI-Spring terminal blocks

Description		Color	Type	Part Number		Pkg qty	Weight (1 pce) g
Ground	Profile aligned with ZK10-3P	Green-yellow	ZK10-PE-3P	1SNK710151R0000		20	43.3

1SNK162081S0201

Technical data valid for copper conductors only.

ZK16 PI-Spring terminal blocks
Feed-through - 12 mm 0.472 in spacing

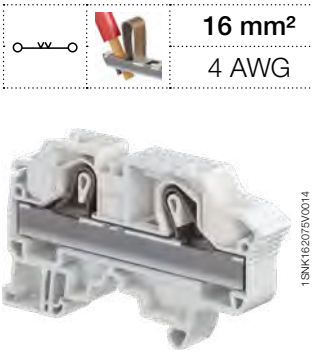

ZK16

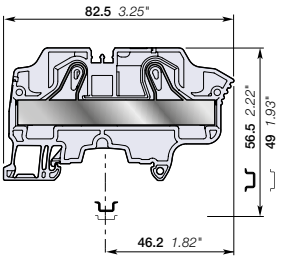

12 mm 0.472 in spacing

	16 mm²
	4 AWG

Description

Combine high performance with compact dimensions:
- 1000 V AC / DC IEC 600 V UL,
- Opt for the best marking visibility thanks to the up-front, flat marker zone, which lets you mark up to eight digits or increase the font size.

Ordering details

Description		Color	Type	Part Number		Pkg qty	Weight (1 pce) g
Feed-through	2 connections	Grey	ZK16	1SNK712010R0000		20	33.80
		Blue	ZK16-BL	1SNK712020R0000		20	33.80

Main technical data

Connecting capacity		IEC	UL - CSA
1 conductor per clamp	Rigid: Solid/Stranded	0.5 ... 25 mm²	20 ... 4 AWG
	Flexible without ferrule	0.5 ... 16 mm²	
	Flexible with non insulated ferrule	0.5 ... 16 mm²	20 ... 6 AWG
	Flexible with insulated ferrule	0.5 ... 16 mm²	20 ... 6 AWG
2 conductors per clamp	Flexible with twin ferrule	0.5 ... 6 mm²	20 ... 10 AWG
Rated current / Rated cross section		76 A / 16 mm²	75 A / 4 AWG
Rated short-time withstand current (1s)		1920 A	2544 A
Short Circuit Current Rating (with specific conditions)			100 kA
Rated voltage		1000 V	600 V
Impulse withstand voltage		8000 V	
Protection		IP20	NEMA 1
Increased safety Ex e		693 V 69 A IEC/EN 60079-7 - IM2 II 2 GD Ex eb I/IIC/IIIC	

The connecting capacity data for one Rigid: Solid/Stranded, or one Flexible conductor (when applicable) is a mandatory information required by IEC, UL and CSA standards (Copper conductors). All other data are provided as supplementary information only. For more details, please consult our CB, UL or CSA certificates and technical datasheet available on http://www.TE.com

CE, CB, RoHS, USR CNR, CSA, EAC Ex, ATEX, IECEx, Haz Loc, BV, DNV

Mounting instructions

Rail		TH 35-7.5, TH 35-15
Wire stripping length		15 mm 0.591 in
Tool (for flexible conductor without ferrule)		Flat screwdriver Ø 4 mm Ø 0.157 in

2

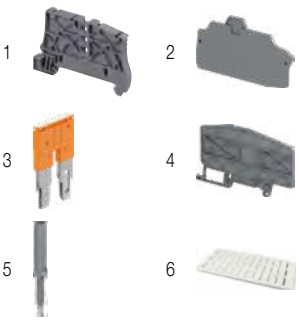

Accessories

	Description			Color	Type	Part Number		Pkg qty	Weight (1 pce) g
1	**End stops**	5.2 mm	0.205 in	Dark grey	BAZ1	1SNK900002R0000		50	5.30
2	**End sections**	2 mm	0.079 in	Dark grey	EK10	1SNK710910R0000		20	3.30
3	**Jumper bars**	2 poles	76 A (IEC)	Orange	JB12-2	1SNK912302R0000		50	4.90
		3 poles	76 A (IEC)		JB12-3	1SNK912303R0000		50	7.60
		5 poles	76 A (IEC)		JB12-5	1SNK912305R0000		20	12.90
4	**Circuit separators**	3 mm	0.118 in	Dark grey	CS-R3	1SNK900107R0000		20	6.40
5	**Test adapters**	For test plugs DIA 2 mm 0.079 in		Dark grey	TP2	1SNK900203R0000		20	1.70
		For test plugs DIA 4 mm 0.157 in			TP4	1SNK900205R0000		20	2.40
6	**Terminal block markers**	Blank marker		White	MG-CPM 13 41791	1SNB041791R0612		1680	0.27
		Blank card			MC812	1SNK160000R0000		22	10.00
					MC812PA	1SNK169999R0000		20	14.00
		Universal wire markers holder		Grey	UMH	1SNK900611R0000		10	0.20

Complete list of accessories is indicated in the terminal block datasheet including end stops.
Some accessories such as jumper bars may modify the terminal block's ratings: Complete information available in the accessories section of the catalog.

Ground PI-Spring terminal blocks

Description		Color	Type	Part Number		Pkg qty	Weight (1 pce) g
Ground	Profile aligned with ZK16	Green-yellow	ZK16-PE	1SNK712150R0000		20	47.00

1SNK162032S0201

Technical data valid for copper conductors only.

ZK16-PV PI-Spring terminal blocks
Feed-through - 14 mm 0.551 in spacing

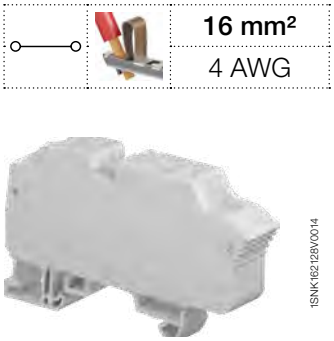

1SNK162128V0014

ZK16-PV

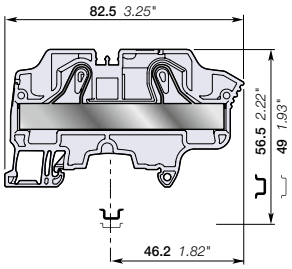

14 mm 0.551 in spacing

16 mm²
4 AWG

Description

Specially designed for high voltage utility scale solar power plants:
- Rated voltage of 1500 V DC IEC and 1000 V DC UL,
- Pre-mounted end section with light grey color specific to this application,
- Improved design with ribs to increase creepage distance,
- Compact solution only 2 mm thicker than normal product,
- No available jumpers for ZK16-PV and ZK16-3P-PV (14 mm spacing).

Ordering details

Description		Color	Type	Part Number		Pkg qty	Weight (1 pce) g
Feed-through	2 connections	Grey	ZK16-PV	1SNK712063R0000		15	36.56
		Blue	ZK16-PV-BL	1SNK712065R0000		15	36.56

Main technical data

Connecting capacity		IEC	UL - CSA
1 conductor per clamp	Rigid: Solid/Stranded	0.5 ... 25 mm²	20 ... 4 AWG
	Flexible without ferrule	0.5 ... 16 mm²	
	Flexible with non insulated ferrule	0.5 ... 16 mm²	20 ... 6 AWG
	Flexible with insulated ferrule	0.5 ... 16 mm²	20 ... 6 AWG
2 conductors per clamp	Flexible with twin ferrule	0.5 ... 6 AWG	20 ... 10 AWG
Rated current / Rated cross section		76 A / 16 mm²	75 A / 4 AWG
Rated short-time withstand current (1s)		1920 A	2544 A
Short Circuit Current Rating (with specific conditions)			100 kA
Rated voltage		1000 V AC / 1500 V DC	1000 V
Impulse withstand voltage		8000 V	
Protection		IP20	NEMA 1

Mounting instructions

Rail	TH 35-7.5, TH 35-15
Wire stripping length	15 mm 0.591 in
Tool (for flexible conductor without ferrule)	Flat screwdriver Ø 4 mm Ø 0.157 in

The connecting capacity data for one Rigid: Solid/Stranded, or one Flexible conductor (when applicable) is a mandatory information required by IEC, UL and CSA standards (Copper conductors). All other data are provided as supplementary information only. For more details, please consult our CB, UL or CSA certificates and technical datasheet available on http://www.TE.com

CE CB RoHS USR CNR CSA EAC

Accessories

	Description			Color	Type	Part Number		Pkg qty	Weight (1 pce) g
1	**End stops**	5.2 mm	0.205 in	Dark grey	BAZ1	1SNK900002R0000		50	5.30
2	**Circuit separators**	3 mm	0.118 in	Dark grey	CS-R3	1SNK900107R0000		20	6.40
3	**Test adapters**	For test plugs DIA 2 mm 0.079 in		Dark grey	TP2	1SNK900203R0000		20	1.70
		For test plugs DIA 4 mm 0.157 in			TP4	1SNK900205R0000		20	2.40
4	**Terminal block markers**	Blank card		White	MC812	1SNK160000R0000		22	10.00
					MC812PA	1SNK169999R0000		20	14.00
		Blank marker			MG-CPM 13 41791	1SNB041791R0612		1680	0.273
		Universal wire markers holder		Grey	UMH	1SNK900611R0000		10	0.20

Complete list of accessories is indicated in the terminal block datasheet including end stops. Some accessories such as jumper bars may modify the terminal block's ratings: Complete information available in the accessories section of the catalog.

Ground PI-Spring terminal blocks

Description		Color	Type	Part Number		Pkg qty	Weight (1 pce) g
Ground	Profile aligned with ZK16	Green-yellow	ZK16-PE	1SNK712150R0000		20	47.00

1SNK162082S0201

Technical data valid for copper conductors only.

ZK16-3P PI-Spring terminal blocks

Feed-through with 3 connections - 12 mm 0.472 in spacing

16 mm²
4 AWG

ZK16-3P

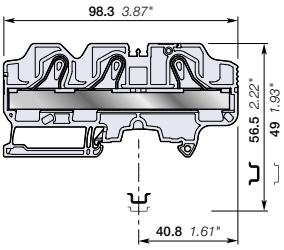

12 mm 0.472 in spacing

Description

- Find all the features of the ZK16 terminal block with the added option of distributing or branching 3 conductors,
- ZK16-3P is perfectly adapted to solar applications: 1250 V DC (1000 V AC) IEC, 1000 V UL.

Ordering details

Description		Color	Type	Part Number		Pkg qty	Weight (1 pce) g
Feed-through	3 connections	Grey	ZK16-3P	1SNK712011R0000		20	44.3
		Blue	ZK16-3P-BL	1SNK712021R0000		20	44.3

Main technical data

Connecting capacity		IEC	UL - CSA
1 conductor per clamp	Rigid: Solid/Stranded	0.5 ... 25 mm²	20 ... 4 AWG
	Flexible without ferrule	0.5 ... 16 mm²	
	Flexible with non insulated ferrule	0.5 ... 16 mm²	20 ... 6 AWG
	Flexible with insulated ferrule	0.5 ... 16 mm²	20 ... 6 AWG
2 conductors per clamp	Flexible with twin ferrule	0.5 ... 6 mm²	20 ... 10 AWG
Rated current / Rated cross section		76 A / 16 mm²	75 A / 4 AWG
Rated short-time withstand current (1s)		1920 A	
Short Circuit Current Rating (with specific conditions)			100 kA
Rated voltage		1000 V	1000 V
Impulse withstand voltage		8000 V	
Protection		IP20	NEMA 1
Increased safety Ex e		693 V 76 A - IM2 II 2 GD Ex eb I/II/IIIC	

Mounting instructions

Rail		TH 35-7.5, TH 35-15
Wire stripping length		15 mm 0.591 in
Tool (for flexible conductor without ferrule)		Flat screwdriver Ø 4 mm Ø 0.157 in

The connecting capacity data for one Rigid: Solid/Stranded, or one Flexible conductor (when applicable) is a mandatory information required by IEC, UL and CSA standards (Copper conductors). All other data are provided as supplementary information only. For more details, please consult our CB, UL or CSA certificates and technical datasheet available on http://www.TE.com

CE | CB | RoHS | USR CNR | CSA | EAC Ex | ATEX | IECEx | BV

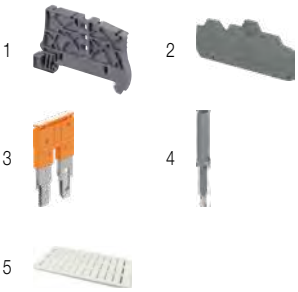

Accessories

	Description			Color	Type	Part Number		Pkg qty	Weight (1 pce) g
1	**End stops**	5.2 mm	0.205 in	Dark grey	BAZ1	1SNK900002R0000		50	5.30
2	**End sections**	2 mm	0.079 in	Dark grey	EK10-3P	1SNK710911R0000		20	4.5
3	**Jumper bars**	2 poles	76 A (IEC)	Orange	JB12-2	1SNK912302R0000		50	4.90
		3 poles	76 A (IEC)		JB12-3	1SNK912303R0000		50	7.60
		5 poles	76 A (IEC)		JB12-5	1SNK912305R0000		20	12.90
4	**Test adapters**	For test plugs DIA 2 mm 0.079 in		Dark grey	TP2	1SNK900203R0000		20	1.70
		For test plugs DIA 4 mm 0.157 in			TP4	1SNK900205R0000		20	2.40
5	**Terminal block markers**	Blank marker		White	MG-CPM 13 41791	1SNB041791R0612		1680	0.27
		Blank card			MC812	1SNK160000R0000		22	10.00
					MC812PA	1SNK169999R0000		20	14.00
		Universal wire markers holder		Grey	UMH	1SNK900611R0000		10	0.20

Complete list of accessories is indicated in the terminal block datasheet including end stops.
Some accessories such as jumper bars may modify the terminal block's ratings: Complete information available in the accessories section of the catalog.

Ground PI-Spring terminal blocks

Description		Color	Type	Part Number		Pkg qty	Weight (1 pce) g
Ground	Profile aligned with ZK16-3P	Green-yellow	ZK16-PE-3P	1SNK712151R0000		20	56.65

1SNK162063S0201

Technical data valid for copper conductors only.

ZK16-3P-PV PI-Spring terminal blocks

Feed-through with 3 connections - 14 mm 0.551 in spacing

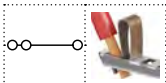

16 mm²
4 AWG

1SNK162130V0014

ZK16-3P-PV

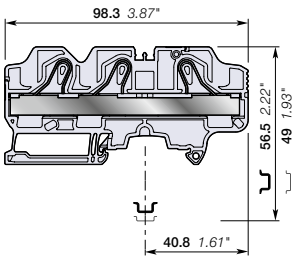

14 mm 0.551 in spacing

Description

Specially designed for high voltage utility scale solar power plants:

- Rated voltage of 1500 V DC IEC and 1000 V DC UL,
- Pre-mounted end section with light grey color specific to this application,
- Improved design with ribs to increase creepage distance,
- Compact solution only 2 mm thicker than normal product,
- 3 connections configuration for easy grouping: 2 inputs / 1 output or 1 input / 2 outputs,
- No available jumpers for ZK16-PV and ZK16-3P-PV (14 mm spacing).

Ordering details

Description		Color	Type	Part Number		Pkg qty	Weight (1 pce) g
Feed-through	3 connections	Grey	ZK16-3P-PV	1SNK712064R0000		15	48.01
		Blue	ZK16-3P-PV-BL	1SNK712067R0000		15	48.01

Main technical data

Connecting capacity		IEC	UL - CSA
1 conductor per clamp	Rigid: Solid/Stranded	0.5 ... 25 mm²	20 ... 4 AWG
	Flexible without ferrule	0.5 ... 16 mm²	
	Flexible with non insulated ferrule	0.5 ... 16 mm²	20 ... 6 AWG
	Flexible with insulated ferrule	0.5 ... 16 mm²	20 ... 6 AWG
2 conductors per clamp	Flexible with twin ferrule	0.5 ... 6 AWG	20 ... 10 AWG
Rated current / Rated cross section		76 A / 16 mm²	75 A / 4 AWG
Rated short-time withstand current (1s)		1920 A	2544 A
Short Circuit Current Rating (with specific conditions)			100 kA
Rated voltage		1000 V AC / 1500 V DC	1000 V
Impulse withstand voltage		8000 V	
Protection		IP20	NEMA 1

Mounting instructions

Rail		TH 35-7.5, TH 35-15
Wire stripping length		15 mm 0.591 in
Tool (for flexible conductor without ferrule)		Flat screwdriver Ø 4 mm Ø 0.157 in

The connecting capacity data for one Rigid: Solid/Stranded, or one Flexible conductor (when applicable) is a mandatory information required by IEC, UL and CSA standards (Copper conductors). All other data are provided as supplementary information only. For more details, please consult our CB, UL or CSA certificates and technical datasheet available on http://www.TE.com

CE CB RoHS USR CNR CSA EAC

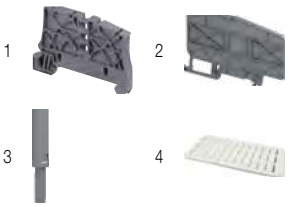

Accessories

	Description			Color	Type	Part Number		Pkg qty	Weight (1 pce) g
1	**End stops**	5.2 mm	0.205 in	Dark grey	BAZ1	1SNK900002R0000		50	5.30
2	**Circuit separators**	3 mm	0.118 in	Dark grey	CS-R3	1SNK900107R0000		20	6.40
3	**Test adapters**	For test plugs DIA 2 mm 0.079 in		Dark grey	TP2	1SNK900203R0000		20	1.70
		For test plugs DIA 4 mm 0.157 in			TP4	1SNK900205R0000		20	2.40
4	**Terminal block markers**	Blank card		White	MC812	1SNK160000R0000		22	10.00
					MC812PA	1SNK169999R0000		20	14.00
		Blank marker			MG-CPM 13 41791	1SNB041791R0612		1680	0.273
		Universal wire markers holder		Grey	UMH	1SNK900611R0000		10	0.20

Complete list of accessories is indicated in the terminal block datasheet including end stops.
Some accessories such as jumper bars may modify the terminal block's ratings: Complete information available in the accessories section of the catalog.

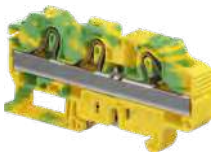

Ground PI-Spring terminal blocks

Description		Color	Type	Part Number		Pkg qty	Weight (1 pce) g
Ground	Profile aligned with ZK16-3P	Green-yellow	ZK16-PE-3P	1SNK712151R0000		20	56.65

1SNK162083S0201

Technical data valid for copper conductors only.

ZK2.5-PE PI-Spring terminal blocks
Ground - 5.2 mm 0.205 in spacing

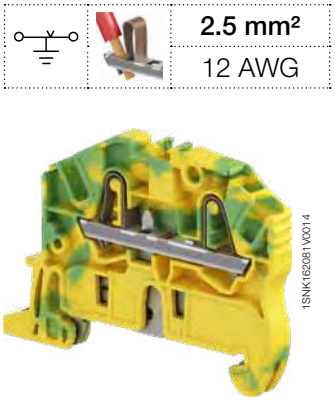

2.5 mm²	
12 AWG	

ZK2.5-PE

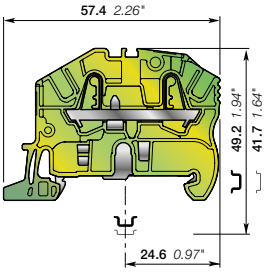

5.2 mm 0.205 in spacing

Description

Improve the safety of your installation in the event of a short-circuit thanks to our screwless rail contact:
- Rail contact non operator dependent,
- Performances above the requirements of the IEC 60947-7-2 terminal block standard,
- Secured snap on or off the rail,
- Profile aligned with ZK2.5.

Ordering details

Description		Color	Type	Part Number		Pkg qty	Weight (1 pce) g
Ground	2 connections	Green-yellow	ZK2.5-PE	1SNK705150R0000		20	10.00

Main technical data

Connecting capacity		IEC	UL - CSA
1 conductor per clamp	Rigid: Solid/Stranded	0.2 ... 4 mm²	26 ... 12 AWG
	Flexible without ferrule	0.22 ... 2.5 mm²	
	Flexible with non insulated ferrule	0.22 ... 2.5 mm²	26 ... 14 AWG
	Flexible with insulated ferrule	0.22 ... 2.5 mm²	26 ... 14 AWG
Rated cross section		2.5 mm²	12 AWG
Rated short-time withstand current (1s)		300 A	396 A
Protection		IP20	NEMA 1
Explosive atmosphere classification		IM2 II 2 GD Ex eb I/IIC/IIIC – Class I, Zone 1, AEx e II, Ex e II U	

Mounting instructions

Rail		TH 35-7.5, TH 35-15
Wire stripping length		11 mm 0.433 in
Tool (for flexible conductor without ferrule)		Flat screwdriver Ø 3.5 mm Ø 0.138 in

The connecting capacity data for one Rigid: Solid/Stranded, or one Flexible conductor (when applicable) is a mandatory information required by IEC, UL and CSA standards (Copper conductors). All other data are provided as supplementary information only. For more details, please consult our CB, UL or CSA certificates and technical datasheet available on http://www.TE.com

CE | CB | RoHS | USR CNR | CSA | EAC Ex | ATEX | IECEx | Haz Loc | BV | DNV

Accessories

	Description			Color	Type	Part Number		Pkg qty	Weight (1 pce) g
1	**End stops**	5.2 mm	0.205 in	Dark grey	BAZ1	1SNK900002R0000		50	5.30
2	**End sections**	2 mm	0.079 in	Dark grey	EK2.5	1SNK705910R0000		20	1.80
3	**Circuit separators**	3 mm	0.118 in	Dark grey	CS-R2	1SNK900106R0000		20	3.80
4	**Terminal block markers**	Blank marker		White	MG-CPM 13 41790	1SNB041790R0512		1960	0.23
		Blank card			MC512	1SNK140000R0000		22	9.00
					MC512PA	1SNK149999R0000		20	10.00
		Universal wire markers holder		Grey	UMH	1SNK900611R0000		10	0.20

Complete list of accessories is indicated in the terminal block datasheet including end stops.
Some accessories such as jumper bars may modify the terminal block's ratings: Complete information available in the accessories section of the catalog.

1SNK162039S0201

Technical data valid for copper conductors only.

ZK2.5-PE-3P PI-Spring terminal blocks

Ground with 3 connections - 5.2 mm 0.205 in spacing

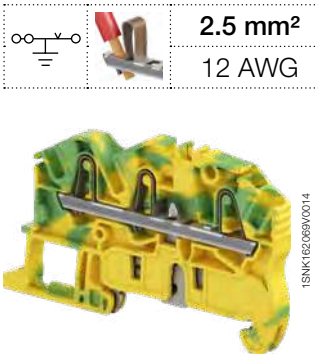

ZK2.5-PE-3P

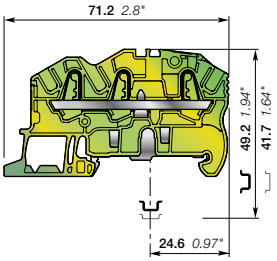

5.2 mm 0.205 in spacing

	2.5 mm²
	12 AWG

Description

Improve the safety of your installation in the event of a short-circuit thanks to our screwless rail contact:

- Rail contact non operator dependent,
- Performances above the requirements of the IEC 60947-7-2 terminal block standard,
- Secured snap on or off the rail,
- Profile aligned with ZK2.5-3P.

Ordering details

Description		Color	Type	Part Number		Pkg qty	Weight (1 pce) g
Ground	3 connections	Green-yellow	ZK2.5-PE-3P	1SNK705151R0000		20	11.90

Main technical data

Connecting capacity		IEC	UL - CSA
1 conductor per clamp	Rigid: Solid/Stranded	0.2 ... 4 mm²	26 ... 12 AWG
	Flexible without ferrule	0.22 ... 2.5 mm²	
	Flexible with non insulated ferrule	0.22 ... 2.5 mm²	26 ... 14 AWG
	Flexible with insulated ferrule	0.22 ... 2.5 mm²	26 ... 14 AWG
Rated cross section		2.5 mm²	12 AWG
Rated short-time withstand current (1s)		300 A	396 A
Protection		IP20	NEMA 1
Explosive atmosphere classification		IM2 II 2 GD Ex eb I/IIC/IIIC – Class I, Zone 1, AEx e II, Ex e II U	

Mounting instructions

Rail	TH 35-7.5, TH 35-15
Wire stripping length	11 mm 0.433 in
Tool (for flexible conductor without ferrule)	Flat screwdriver Ø 3.5 mm Ø 0.138 in

The connecting capacity data for one Rigid: Solid/Stranded, or one Flexible conductor (when applicable) is a mandatory information required by IEC, UL and CSA standards (Copper conductors). All other data are provided as supplementary information only. For more details, please consult our CB, UL or CSA certificates and technical datasheet available on http://www.TE.com

CE | CB | RoHS | USR CNR | CSA | EAC Ex | ATEX | IECEx | Haz Loc | BV | DNV

Accessories

	Description			Color	Type	Part Number		Pkg qty	Weight (1 pce) g
1	**End stops**	5.2 mm	0.205 in	Dark grey	BAZ1	1SNK900002R0000		50	5.30
2	**End sections**	2 mm	0.079 in	Dark grey	EK2.5-3P	1SNK705911R0000		20	2.40
3	**Circuit separators**	3 mm	0.118 in	Dark grey	CS-R3	1SNK900107R0000		20	6.40
4	**Terminal block markers**	Blank marker		White	MG-CPM 13 41790	1SNB041790R0512		1960	0.23
		Blank card			MC512	1SNK140000R0000		22	9.00
					MC512PA	1SNK149999R0000		20	10.00
		Universal wire markers holder		Grey	UMH	1SNK900611R0000		10	0.20

Complete list of accessories is indicated in the terminal block datasheet including end stops.
Some accessories such as jumper bars may modify the terminal block's ratings: Complete information available in the accessories section of the catalog.

1SNK162040S0201

Technical data valid for copper conductors only.

ZK2.5-PE-4P PI-Spring terminal blocks

Ground with 4 connections - 5.2 mm 0.205 in spacing

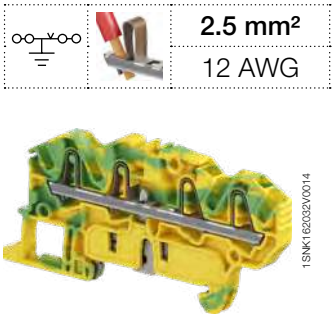

2.5 mm²	
12 AWG	

1SNK162032V0014

ZK2.5-PE-4P

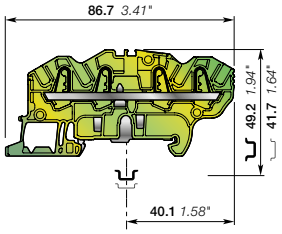

5.2 mm 0.205 in spacing

Description

Improve the safety of your installation in the event of a short-circuit thanks to our screwless rail contact:

- Rail contact non operator dependent,
- Performances above the requirements of the IEC 60947-7-2 terminal block standard,
- Secured snap on or off the rail,
- Profile aligned with ZK2.5-4P.

Ordering details

Description		Color	Type	Part Number		Pkg qty	Weight (1 pce) g
Ground	4 connections	Green-yellow	ZK2.5-PE-4P	1SNK705152R0000		20	13.60

Main technical data

Connecting capacity		IEC	UL - CSA
1 conductor per clamp	Rigid: Solid/Stranded	0.2 ... 4 mm²	26 ... 12 AWG
	Flexible without ferrule	0.22 ... 2.5 mm²	
	Flexible with non insulated ferrule	0.22 ... 2.5 mm²	26 ... 14 AWG
	Flexible with insulated ferrule	0.22 ... 2.5 mm²	26 ... 14 AWG
Rated cross section		2.5 mm²	12 AWG
Rated short-time withstand current (1s)		300 A	396 A
Protection		IP20	NEMA 1
Explosive atmosphere classification		IM2 II 2 GD Ex eb I/IIC/IIIC – Class I, Zone 1, AEx e II, Ex e II U	

Mounting instructions

Rail		TH 35-7.5, TH 35-15
Wire stripping length		11 mm 0.433 in
Tool (for flexible conductor without ferrule)		Flat screwdriver Ø 3.5 mm Ø 0.138 in

The connecting capacity data for one Rigid: Solid/Stranded, or one Flexible conductor (when applicable) is a mandatory information required by IEC, UL and CSA standards (Copper conductors). All other data are provided as supplementary information only. For more details, please consult our CB, UL or CSA certificates and technical datasheet available on http://www.TE.com

CE, CB, RoHS, USR CNR, CSA, EAC Ex, ATEX, IECEx, Haz Loc, BV, DNV

Accessories

	Description			Color	Type	Part Number		Pkg qty	Weight (1 pce) g
1	**End stops**	5.2 mm	0.205 in	Dark grey	BAZ1	1SNK900002R0000		50	5.30
2	**End sections**	2 mm	0.079 in	Dark grey	EK2.5-4P	1SNK705912R0000		20	2.70
3	**Circuit separators**	3 mm	0.118 in	Dark grey	CS-R3	1SNK900107R0000		20	6.40
4	**Terminal block markers**	Blank marker		White	MG-CPM 13 41790	1SNB041790R0512		1960	0.23
		Blank card			MC512	1SNK140000R0000		22	9.00
					MC512PA	1SNK149999R0000		20	10.00
		Universal wire markers holder		Grey	UMH	1SNK900611R0000		10	0.20

Complete list of accessories is indicated in the terminal block datasheet including end stops.
Some accessories such as jumper bars may modify the terminal block's ratings: Complete information available in the accessories section of the catalog.

1SNK162041S0201

Technical data valid for copper conductors only.

ZK4-PE PI-Spring terminal blocks
Ground - 6 mm 0.236 in spacing

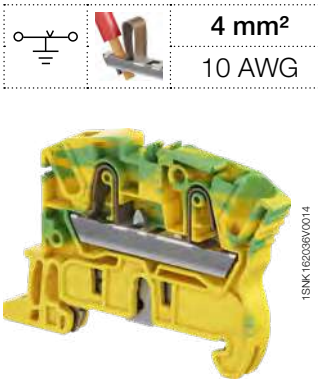

ZK4-PE

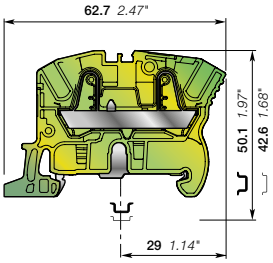

6 mm 0.236 in spacing

	4 mm²
	10 AWG

Description

Improve the safety of your installation in the event of a short-circuit thanks to our screwless rail contact:
- Rail contact non operator dependent,
- Performances above the requirements of the IEC 60947-7-2 terminal block standard,
- Secured snap on or off the rail,
- Profile aligned with ZK4.

Ordering details

Description		Color	Type	Part Number		Pkg qty	Weight (1 pce) g
Ground	2 connections	Green-yellow	ZK4-PE	1SNK706150R0000		20	12.60

Main technical data

Connecting capacity		IEC	UL - CSA
1 conductor per clamp	Rigid: Solid/Stranded	0.5 ... 6 mm²	26 ... 10 AWG
	Flexible without ferrule	0.5 ... 4 mm²	
	Flexible with non insulated ferrule	0.5 ... 4 mm²	26 ... 12 AWG
	Flexible with insulated ferrule	0.5 ... 4 mm²	26 ... 12 AWG
Rated cross section		4 mm²	10 AWG
Rated short-time withstand current (1s)		480 A	636 A
Protection		IP20	NEMA 1
Explosive atmosphere classification		IM2 II 2 GD Ex eb I/IIC/IIIC – Class I, Zone 1, AEx e II, Ex e II U	

The connecting capacity data for one Rigid: Solid/Stranded, or one Flexible conductor (when applicable) is a mandatory information required by IEC, UL and CSA standards (Copper conductors). All other data are provided as supplementary information only. For more details, please consult our CB, UL or CSA certificates and technical datasheet available on http://www.TE.com

CE, CB, RoHS, USR CNR, CSA, EAC Ex, ATEX, IECEx, Haz Loc, BV, DNV

Mounting instructions

Rail	TH 35-7.5, TH 35-15
Wire stripping length	12.5 mm 0.492 in
Tool (for flexible conductor without ferrule)	Flat screwdriver Ø 3.5 mm Ø 0.138 in

Accessories

	Description			Color	Type	Part Number		Pkg qty	Weight (1 pce) g
1	**End stops**	5.2 mm	0.205 in	Dark grey	BAZ1	1SNK900002R0000		50	5.30
2	**End sections**	2 mm	0.079 in	Dark grey	EK2.5	1SNK705910R0000		20	1.80
3	**Circuit separators**	3 mm	0.118 in	Dark grey	CS-R2	1SNK900106R0000		20	3.80
4	**Terminal block markers**	Blank marker		White	MG-CPM 13 41791	1SNB041791R0612		1680	0.27
		Blank card			MC612	1SNK150000R0000		22	10.00
					MC612PA	1SNK159999R0000		20	11.00
		Universal wire markers holder		Grey	UMH	1SNK900611R0000		10	0.20

Complete list of accessories is indicated in the terminal block datasheet including end stops.
Some accessories such as jumper bars may modify the terminal block's ratings: Complete information available in the accessories section of the catalog.

1SNK162042S0201

Technical data valid for copper conductors only.

ZK4-PE-3P PI-Spring terminal blocks

Ground with 3 connections - 6 mm 0.236 in spacing

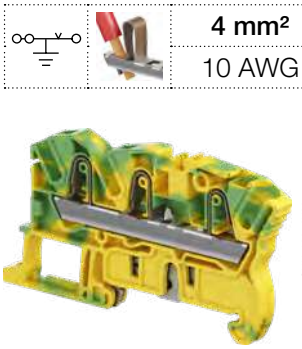

4 mm²	
10 AWG	

1SNK162040V0014

ZK4-PE-3P

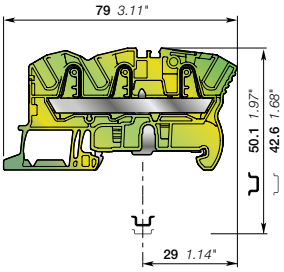

6 mm 0.236 in spacing

Description

Improve the safety of your installation in the event of a short-circuit thanks to our screwless rail contact:

- Rail contact non operator dependent,
- Performances above the requirements of the IEC 60947-7-2 terminal block standard,
- Secured snap on or off the rail,
- Profile aligned with ZK4-3P.

Ordering details

Description		Color	Type	Part Number		Pkg qty	Weight (1 pce) g
Ground	3 connections	Green-yellow	ZK4-PE-3P	1SNK706151R0000		20	15.70

Main technical data

Connecting capacity		IEC	UL - CSA
1 conductor per clamp	Rigid: Solid/Stranded	0.5 ... 6 mm²	26 ... 10 AWG
	Flexible without ferrule	0.5 ... 4 mm²	
	Flexible with non insulated ferrule	0.5 ... 4 mm²	26 ... 12 AWG
	Flexible with insulated ferrule	0.5 ... 4 mm²	26 ... 12 AWG
Rated cross section		4 mm²	10 AWG
Rated short-time withstand current (1s)		480 A	636 A
Protection		IP20	NEMA 1
Explosive atmosphere classification		IM2 II 2 GD Ex eb I/IIC/IIIC – Class I, Zone 1, AEx e II, Ex e II U	

Mounting instructions

Rail	TH 35-7.5, TH 35-15
Wire stripping length	12.5 mm 0.492 in
Tool (for flexible conductor without ferrule)	Flat screwdriver Ø 3.5 mm Ø 0.138 in

The connecting capacity data for one Rigid: Solid/Stranded, or one Flexible conductor (when applicable) is a mandatory information required by IEC, UL and CSA standards (Copper conductors). All other data are provided as supplementary information only. For more details, please consult our CB, UL or CSA certificates and technical datasheet available on http://www.TE.com

CE, CB, RoHS, USR CNR, CSA, EAC Ex, ATEX, IECEx, Haz Loc, BV, DNV

Accessories

	Description			Color	Type	Part Number		Pkg qty	Weight (1 pce) g
1	**End stops**	5.2 mm	0.205 in	Dark grey	BAZ1	1SNK900002R0000		50	5.30
2	**End sections**	2 mm	0.079 in	Dark grey	EK2.5-3P	1SNK705911R0000		20	2.40
3	**Circuit separators**	3 mm	0.118 in	Dark grey	CS-R3	1SNK900107R0000		20	6.40
4	**Terminal block markers**	Blank marker		White	MG-CPM 13 41791	1SNB041791R0612		1680	0.27
		Blank card			MC612	1SNK150000R0000		22	10.00
					MC612PA	1SNK159999R0000		20	11.00
		Universal wire markers holder		Grey	UMH	1SNK900611R0000		10	0.20

Complete list of accessories is indicated in the terminal block datasheet including end stops.
Some accessories such as jumper bars may modify the terminal block's ratings: Complete information available in the accessories section of the catalog.

1SNK162043S0201

Technical data valid for copper conductors only.

ZK4-PE-4P PI-Spring terminal blocks

Ground with 4 connections - 6 mm 0.236 in spacing

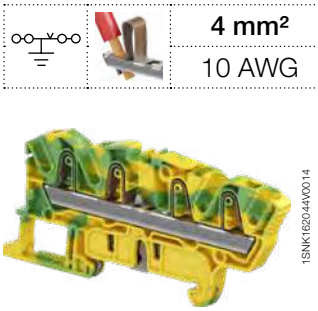

ZK4-PE-4P

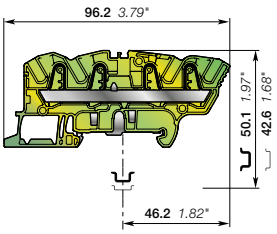

6 mm 0.236 in spacing

4 mm²
10 AWG

Description

Improve the safety of your installation in the event of a short-circuit thanks to our screwless rail contact:

- Rail contact non operator dependent,
- Performances above the requirements of the IEC 60947-7-2 terminal block standard,
- Secured snap on or off the rail,
- Profile aligned with ZK4-4P.

Ordering details

Description		Color	Type	Part Number		Pkg qty	Weight (1 pce) g
Ground	4 connections	Green-yellow	ZK4-PE-4P	1SNK706152R0000		20	18.40

Main technical data

Connecting capacity		IEC	UL - CSA
1 conductor per clamp	Rigid: Solid/Stranded	0.5 ... 6 mm²	26 ... 10 AWG
	Flexible without ferrule	0.5 ... 4 mm²	
	Flexible with non insulated ferrule	0.5 ... 4 mm²	26 ... 12 AWG
	Flexible with insulated ferrule	0.5 ... 4 mm²	26 ... 12 AWG
Rated cross section		4 mm²	10 AWG
Rated short-time withstand current (1s)		480 A	636 A
Protection		IP20	NEMA 1
Explosive atmosphere classification		IM2 II 2 GD Ex eb I/IIC/IIIC – Class I, Zone 1, AEx e II, Ex e II U	

Mounting instructions

Rail	TH 35-7.5, TH 35-15
Wire stripping length	12.5 mm 0.492 in
Tool (for flexible conductor without ferrule)	Flat screwdriver Ø 3.5 mm Ø 0.138 in

The connecting capacity data for one Rigid: Solid/Stranded, or one Flexible conductor (when applicable) is a mandatory information required by IEC, UL and CSA standards (Copper conductors). All other data are provided as supplementary information only. For more details, please consult our CB, UL or CSA certificates and technical datasheet available on http://www.TE.com

CE, CB, RoHS, USR CNR, CSA, EAC Ex, ATEX, IECEx, Haz Loc, BV, DNV

Accessories

	Description			Color	Type	Part Number		Pkg qty	Weight (1 pce) g
1	End stops	5.2 mm	0.205 in	Dark grey	BAZ1	1SNK900002R0000		50	5.30
2	End sections	2 mm	0.079 in	Dark grey	EK2.5-4P	1SNK705912R0000		20	2.70
3	Circuit separators	3 mm	0.118 in	Dark grey	CS-R3	1SNK900107R0000		20	6.40
4	Terminal block markers	Blank marker		White	MG-CPM 13 41791	1SNB041791R0612		1680	0.27
		Blank card			MC612	1SNK150000R0000		22	10.00
					MC612PA	1SNK159999R0000		20	11.00
		Universal wire markers holder		Grey	UMH	1SNK900611R0000		10	0.20

Complete list of accessories is indicated in the terminal block datasheet including end stops.
Some accessories such as jumper bars may modify the terminal block's ratings: Complete information available in the accessories section of the catalog.

1SNK162044S0201

Technical data valid for copper conductors only.

ZK6-PE PI-Spring terminal blocks
Ground - 8 mm 0.315 in spacing

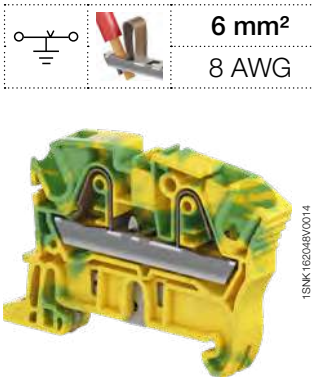

ZK6-PE

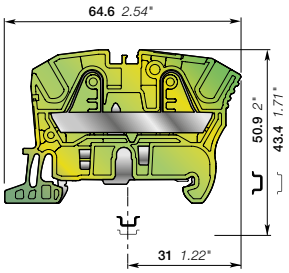

8 mm 0.315 in spacing

	6 mm²
	8 AWG

Description

Improve the safety of your installation in the event of a short-circuit thanks to our screwless rail contact:
- Rail contact non operator dependent,
- Performances above the requirements of the IEC 60947-7-2 terminal block standard,
- Secured snap on or off the rail,
- Profile aligned with ZK6.

Ordering details

Description		Color	Type	Part Number		Pkg qty	Weight (1 pce) g
Ground	2 connections	Green-yellow	ZK6-PE	1SNK708150R0000		20	20.30

Main technical data

Connecting capacity		IEC	UL - CSA
1 conductor per clamp	Rigid: Solid/Stranded	0.5 ... 10 mm²	24 ... 8 AWG
	Flexible without ferrule	0.5 ... 6 mm²	
	Flexible with non insulated ferrule	0.5 ... 6 mm²	24 ... 10 AWG
	Flexible with insulated ferrule	0.5 ... 6 mm²	24 ... 10 AWG
Rated cross section		6 mm²	8 AWG
Rated short-time withstand current (1s)		720 A	1008 A
Protection		IP20	NEMA 1
Explosive atmosphere classification		IM2 II 2 GD Ex eb I/IIC/IIIC – Class I, Zone 1, AEx e II, Ex e II U	

Mounting instructions

Rail		TH 35-7.5, TH 35-15
Wire stripping length		12.5 mm 0.492 in
Tool (for flexible conductor without ferrule)		Flat screwdriver Ø 3.5 mm Ø 0.138 in

The connecting capacity data for one Rigid: Solid/Stranded, or one Flexible conductor (when applicable) is a mandatory information required by IEC, UL and CSA standards (Copper conductors). All other data are provided as supplementary information only. For more details, please consult our CB, UL or CSA certificates and technical datasheet available on http://www.TE.com

CE, CB, RoHS, USR CNR, CSA, EAC Ex, ATEX, IECEx, Haz Loc, BV, DNV

Accessories

	Description			Color	Type	Part Number		Pkg qty	Weight (1 pce) g
1	**End stops**	5.2 mm	0.205 in	Dark grey	BAZ1	1SNK900002R0000		50	5.30
2	**End sections**	2 mm	0.079 in	Dark grey	EK2.5	1SNK705910R0000		20	1.80
3	**Circuit separators**	3 mm	0.118 in	Dark grey	CS-R2	1SNK900106R0000		20	3.80
4	**Terminal block markers**	Blank marker		White	MG-CPM 13 41791	1SNB041791R0612		1680	0.27
		Blank card			MC812	1SNK160000R0000		22	10.00
					MC812PA	1SNK169999R0000		20	14.00
		Universal wire markers holder		Grey	UMH	1SNK900611R0000		10	0.20

Complete list of accessories is indicated in the terminal block datasheet including end stops.
Some accessories such as jumper bars may modify the terminal block's ratings: Complete information available in the accessories section of the catalog.

1SNK162045S0201

Technical data valid for copper conductors only.

ZK6-PE-3P PI-Spring terminal blocks

Ground with 3 connections - 8 mm 0.315 in spacing

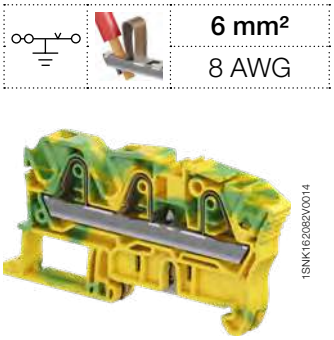

6 mm²
8 AWG

1SNK162082V0014

ZK6-PE-3P

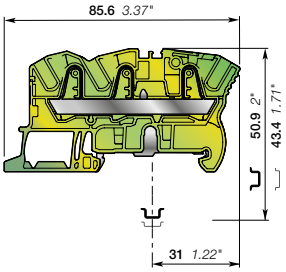

8 mm 0.315 in spacing

Description

Improve the safety of your installation in the event of a short-circuit thanks to our screwless rail contact:

- Rail contact non operator dependent,
- Performances above the requirements of the IEC 60947-7-2 terminal block standard,
- Secured snap on or off the rail,
- Profile aligned with ZK6-3P.

Ordering details

Description		Color	Type	Part Number		Pkg qty	Weight (1 pce) g
Ground	3 connections	Green-yellow	ZK6-PE-3P	1SNK708151R0000		20	21.50

Main technical data

Connecting capacity		IEC	UL - CSA
1 conductor per clamp	Rigid: Solid/Stranded	0.5 ... 10 mm²	24 ... 8 AWG
	Flexible without ferrule	0.5 ... 6 mm²	
	Flexible with non insulated ferrule	0.5 ... 6 mm²	24 ... 10 AWG
	Flexible with insulated ferrule	0.5 ... 6 mm²	24 ... 10 AWG
Rated cross section		6 mm²	8 AWG
Rated short-time withstand current (1s)		720 A	1008 A
Protection		IP20	NEMA 1
Explosive atmosphere classification		IM2 II 2 GD Ex eb I/IIC/IIIC – Class I, Zone 1, AEx e II, Ex e II U	

Mounting instructions

Rail		TH 35-7.5, TH 35-15
Wire stripping length		12.5 mm 0.492 in
Tool (for flexible conductor without ferrule)		Flat screwdriver Ø 3.5 mm Ø 0.138 in

The connecting capacity data for one Rigid: Solid/Stranded, or one Flexible conductor (when applicable) is a mandatory information required by IEC, UL and CSA standards (Copper conductors). All other data are provided as supplementary information only. For more details, please consult our CB, UL or CSA certificates and technical datasheet available on http://www.TE.com

CE | CB | RoHS | USR CNR | CSA | EAC Ex | ATEX | IECEx | Haz Loc | BV | DNV

Accessories

	Description			Color	Type	Part Number		Pkg qty	Weight (1 pce) g
1	**End stops**	5.2 mm	0.205 in	Dark grey	BAZ1	1SNK900002R0000		50	5.30
2	**End sections**	2 mm	0.079 in	Dark grey	EK6-3P	1SNK708911R0000		20	2.80
3	**Circuit separators**	3 mm	0.118 in	Dark grey	CS-R3	1SNK900107R0000		20	6.40
4	**Terminal block markers**	Blank marker		White	MG-CPM 13 41791	1SNB041791R0612		1680	0.27
		Blank card			MC812	1SNK160000R0000		22	10.00
					MC812PA	1SNK169999R0000		20	14.00
		Universal wire markers holder		Grey	UMH	1SNK900611R0000		10	0.20

Complete list of accessories is indicated in the terminal block datasheet including end stops.
Some accessories such as jumper bars may modify the terminal block's ratings: Complete information available in the accessories section of the catalog.

1SNK162046S0201

Technical data valid for copper conductors only.

ZK10-PE PI-Spring terminal blocks
Ground - 10 mm 0.394 in spacing

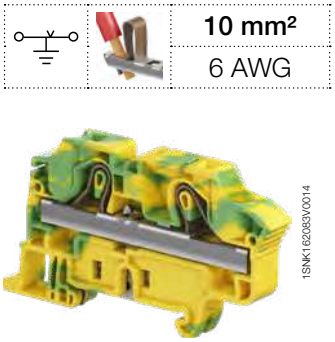

10 mm²
6 AWG

ZK10-PE

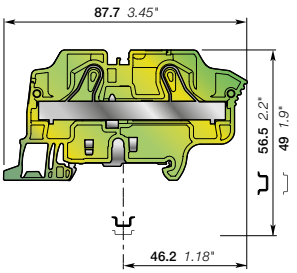

10 mm 0.394 in spacing

Description

Improve the safety of your installation in the event of a short-circuit thanks to our screwless rail contact:
- Rail contact non operator dependent,
- Performances above the requirements of the IEC 60947-7-2 terminal block standard,
- Secured snap on or off the rail,
- Profile aligned with ZK10.

Ordering details

Description		Color	Type	Part Number		Pkg qty	Weight (1 pce) g
Ground	2 connections	Green-yellow	ZK10-PE	1SNK710150R0000		20	36.20

Main technical data

Connecting capacity		IEC	UL - CSA
1 conductor per clamp	Rigid: Solid/Stranded	0.5 ... 16 mm²	20 ... 6 AWG
	Flexible without ferrule	0.5 ... 10 mm²	
	Flexible with non insulated ferrule	0.5 ... 10 mm²	20 ... 8 AWG
	Flexible with insulated ferrule	0.5 ... 10 mm²	20 ... 8 AWG
Rated cross section		10 mm²	6 AWG
Rated short-time withstand current (1s)		1200 A	1596 A
Protection		IP20	NEMA 1
Explosive atmosphere classification		IM2 II 2 GD Ex eb I/IIC/IIIC – Class I, Zone 1, AEx e II, Ex e II U	

Mounting instructions

Rail	TH 35-7.5, TH 35-15
Wire stripping length	15 mm 0.591 in
Tool (for flexible conductor without ferrule)	Flat screwdriver Ø 4 mm Ø 0.157 in

The connecting capacity data for one Rigid: Solid/Stranded, or one Flexible conductor (when applicable) is a mandatory information required by IEC, UL and CSA standards (Copper conductors). All other data are provided as supplementary information only. For more details, please consult our CB, UL or CSA certificates and technical datasheet available on http://www.TE.com

CE, CB, RoHS, USR CNR, CSA, EAC Ex, ATEX, IECEx, Haz Loc, BV, DNV

Accessories

	Description			Color	Type	Part Number		Pkg qty	Weight (1 pce) g
1	**End stops**	5.2 mm	0.205 in	Dark grey	BAZ1	1SNK900002R0000		50	5.30
2	**End sections**	2 mm	0.079 in	Dark grey	EK10	1SNK710910R0000		20	3.30
3	**Circuit separators**	3 mm	0.118 in	Dark grey	CS-R3	1SNK900107R0000		20	6.40
4	**Test adapters**	For test plugs DIA 2 mm 0.079 in		Dark grey	TP2	1SNK900203R0000		20	1.70
		For test plugs DIA 4 mm 0.157 in			TP4	1SNK900205R0000		20	2.40
5	**Terminal block markers**	Blank marker		White	MG-CPM 13 41791	1SNB041791R0612		1680	0.27
		Blank card			MC812	1SNK160000R0000		22	10.00
					MC812PA	1SNK169999R0000		20	14.00
		Universal wire markers holder		Grey	UMH	1SNK900611R0000		10	0.20

Complete list of accessories is indicated in the terminal block datasheet including end stops.
Some accessories such as jumper bars may modify the terminal block's ratings: Complete information available in the accessories section of the catalog.

1SNK162047S0201

Technical data valid for copper conductors only.

ZK10-PE-3P PI-Spring terminal blocks

Ground with 3 connections - 10 mm 0.394 in spacing

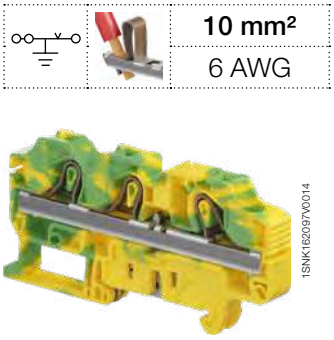

ZK10-PE-3P

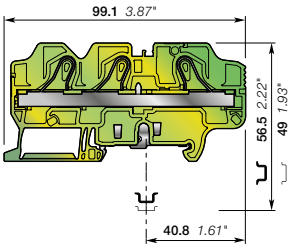

10 mm 0.394 in spacing

	10 mm²
	6 AWG

Description

Improve the safety of your installation in the event of a short-circuit thanks to our screwless rail contact:

- Rail contact non operator dependent,
- Performances above the requirements of the IEC 60947-7-2 standard,
- Secured snap on or off the rail,
- Profile aligned with ZK10-3P.

Ordering details

Description		Color	Type	Part Number		Pkg qty	Weight (1 pce) g
Ground	3 connections	Green-yellow	ZK10-PE-3P	1SNK710151R0000		20	43.3

Main technical data

Connecting capacity		IEC	UL - CSA
1 conductor per clamp	Rigid: Solid/Stranded	0.5 ... 16 mm²	20 ... 6 AWG
	Flexible without ferrule	0.5 ... 10 mm²	
	Flexible with non insulated ferrule	0.5 ... 10 mm²	20 ... 8 AWG
	Flexible with insulated ferrule	0.5 ... 10 mm²	20 ... 8 AWG
Rated cross section		10 mm²	6 AWG
Rated short-time withstand current (1s)		1200 A	1596 A
Protection		IP20	NEMA 1
Explosive atmosphere classification		IM2 II 2 GD Ex eb I/II/IIIC	

Mounting instructions

Rail	TH 35-7.5, TH 35-15
Wire stripping length	15 mm 0.591 in
Tool (for flexible conductor without ferrule)	Flat screwdriver Ø 4 mm Ø 0.157 in

The connecting capacity data for one Rigid: Solid/Stranded, or one Flexible conductor (when applicable) is a mandatory information required by IEC, UL and CSA standards (Copper conductors). All other data are provided as supplementary information only. For more details, please consult our CB, UL or CSA certificates and technical datasheet available on http://www.TE.com

CE, CB, RoHS, USR CNR, CSA, EAC Ex, ATEX, IECEx, BV

Accessories

	Description			Color	Type	Part Number		Pkg qty	Weight (1 pce) g
1	**End stops**	5.2 mm	0.205 in	Dark grey	BAZ1	1SNK900002R0000		50	5.30
2	**End sections**	2 mm	0.079 in	Dark grey	EK10-3P	1SNK710911R0000		20	4.5
3	**Test adapters**	For test plugs DIA 2 mm 0.079 in		Dark grey	TP2	1SNK900203R0000		20	1.70
		For test plugs DIA 4 mm 0.157 in			TP4	1SNK900205R0000		20	2.40
4	**Terminal block markers**	Blank marker		White	MG-CPM 13 41791	1SNB041791R0612		1680	0.27
		Blank card			MC812	1SNK160000R0000		22	10.00
					MC812PA	1SNK169999R0000		20	14.00
		Universal wire markers holder		Grey	UMH	1SNK900611R0000		10	0.20

Complete list of accessories is indicated in the terminal block datasheet including end stops.
Some accessories such as jumper bars may modify the terminal block's ratings: Complete information available in the accessories section of the catalog.

1SNK162062S0201

Technical data valid for copper conductors only.

ZK16-PE PI-Spring terminal blocks
Ground - 12 mm 0.472 in spacing

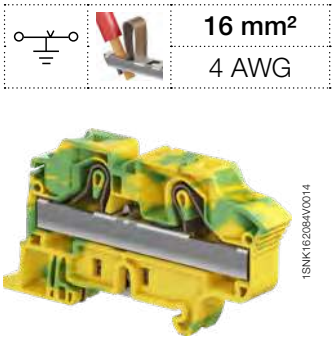

ZK16-PE

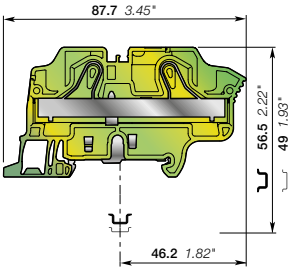

12 mm 0.472 in spacing

	16 mm²
	4 AWG

Description

Improve the safety of your installation in the event of a short-circuit thanks to our screwless rail contact:
- Rail contact non operator dependent,
- Performances above the requirements of the IEC 60947-7-2 terminal block standard,
- Secured snap on or off the rail,
- Profile aligned with ZK16.

Ordering details

Description		Color	Type	Part Number		Pkg qty	Weight (1 pce) g
Ground	2 connections	Green-yellow	ZK16-PE	1SNK712150R0000		20	47.00

Main technical data

Connecting capacity		IEC	UL - CSA
1 conductor per clamp	Rigid: Solid/Stranded	0.5 ... 25 mm²	20 ... 4 AWG
	Flexible without ferrule	0.5 ... 16 mm²	
	Flexible with non insulated ferrule	0.5 ... 16 mm²	20 ... 6 AWG
	Flexible with insulated ferrule	0.5 ... 16 mm²	20 ... 6 AWG
Rated cross section		16 mm²	4 AWG
Rated short-time withstand current (1s)		1920 A	2544 A
Protection		IP20	NEMA 1
Explosive atmosphere classification		IM2 II 2 GD Ex eb I/IIC/IIIC – Class I, Zone 1, AEx e II, Ex e II U	

Mounting instructions

Rail	TH 35-7.5, TH 35-15
Wire stripping length	15 mm 0.591 in
Tool (for flexible conductor without ferrule)	Flat screwdriver Ø 4 mm Ø 0.157 in

The connecting capacity data for one Rigid: Solid/Stranded, or one Flexible conductor (when applicable) is a mandatory information required by IEC, UL and CSA standards (Copper conductors). All other data are provided as supplementary information only. For more details, please consult our CB, UL or CSA certificates and technical datasheet available on http://www.TE.com

CE, CB, RoHS, USR CNR, CSA, EAC Ex, ATEX, IECEx, Haz Loc, BV, DNV

Accessories

	Description			Color	Type	Part Number		Pkg qty	Weight (1 pce) g
1	**End stops**	5.2 mm	0.205 in	Dark grey	BAZ1	1SNK900002R0000		50	5.30
2	**End sections**	2 mm	0.079 in	Dark grey	EK10	1SNK710910R0000		20	3.30
3	**Circuit separators**	3 mm	0.118 in	Dark grey	CS-R3	1SNK900107R0000		20	6.40
4	**Test adapters**	For test plugs DIA 2 mm 0.079 in		Dark grey	TP2	1SNK900203R0000		20	1.70
		For test plugs DIA 4 mm 0.157 in			TP4	1SNK900205R0000		20	2.40
5	**Terminal block markers**	Blank marker		White	MG-CPM 13 41791	1SNB041791R0612		1680	0.27
		Blank card			MC812	1SNK160000R0000		22	10.00
					MC812PA	1SNK169999R0000		20	14.00
		Universal wire markers holder		Grey	UMH	1SNK900611R0000		10	0.20

Complete list of accessories is indicated in the terminal block datasheet including end stops.
Some accessories such as jumper bars may modify the terminal block's ratings: Complete information available in the accessories section of the catalog.

1SNK162048S0201

Technical data valid for copper conductors only.

ZK16-PE-3P PI-Spring terminal blocks

Ground with 3 connections - 12 mm 0.472 in spacing

16 mm²
4 AWG

ZK16-PE-3P

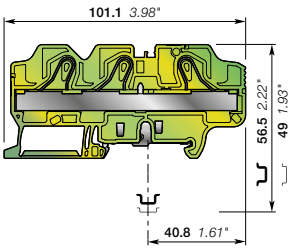

12 mm 0.472 in spacing

Description

Improve the safety of your installation in the event of a short-circuit thanks to our screwless rail contact:

- Rail contact non operator dependent,
- Performances above the requirements of the IEC 60947-7-2 standard,
- Secured snap on or off the rail,
- Profile aligned with ZK16-3P.

Ordering details

Description		Color	Type	Part Number		Pkg qty	Weight (1 pce) g
Ground	3 connections	Green-yellow	ZK16-PE-3P	1SNK712151R0000		20	56.65

Main technical data

Connecting capacity		IEC	UL - CSA
1 conductor per clamp	Rigid: Solid/Stranded	0.5 ... 25 mm²	20 ... 4 AWG
	Flexible without ferrule	0.5 ... 16 mm²	
	Flexible with non insulated ferrule	0.5 ... 16 mm²	20 ... 6 AWG
	Flexible with insulated ferrule	0.5 ... 16 mm²	20 ... 6 AWG
Rated cross section		16 mm²	4 AWG
Rated short-time withstand current (1s)		1920 A	2544 A
Protection		IP20	NEMA 1
Explosive atmosphere classification		IM2 II 2 GD Ex eb I/II/IIIC	

Mounting instructions

Rail	TH 35-7.5, TH 35-15
Wire stripping length	15 mm 0.591 in
Tool (for flexible conductor without ferrule)	Flat screwdriver Ø 4 mm Ø 0.157 in

The connecting capacity data for one Rigid: Solid/Stranded, or one Flexible conductor (when applicable) is a mandatory information required by IEC, UL and CSA standards (Copper conductors). All other data are provided as supplementary information only. For more details, please consult our CB, UL or CSA certificates and technical datasheet available on http://www.TE.com

CE, CB, RoHS, USR CNR, CSA, EAC Ex, ATEX, IECEx, BV

Accessories

	Description			Color	Type	Part Number		Pkg qty	Weight (1 pce) g
1	End stops	5.2 mm	0.205 in	Dark grey	BAZ1	1SNK900002R0000		50	5.30
2	End sections	2 mm	0.079 in	Dark grey	EK10-3P	1SNK710911R0000		20	4.5
3	Test adapters	For test plugs DIA 2 mm 0.079 in		Dark grey	TP2	1SNK900203R0000		20	1.70
		For test plugs DIA 4 mm 0.157 in			TP4	1SNK900205R0000		20	2.40
4	Terminal block markers	Blank marker		White	MG-CPM 13 41791	1SNB041791R0612		1680	0.27
		Blank card			MC812	1SNK160000R0000		22	10.00
					MC812PA	1SNK169999R0000		20	14.00
		Universal wire markers holder		Grey	UMH	1SNK900611R0000		10	0.20

Complete list of accessories is indicated in the terminal block datasheet including end stops.
Some accessories such as jumper bars may modify the terminal block's ratings: Complete information available in the accessories section of the catalog.

1SNK162064S0201

Technical data valid for copper conductors only.

ZK2.5-S PI-Spring terminal blocks

Disconnect with blade - with test sockets - 5.2 mm 0.205 in spacing

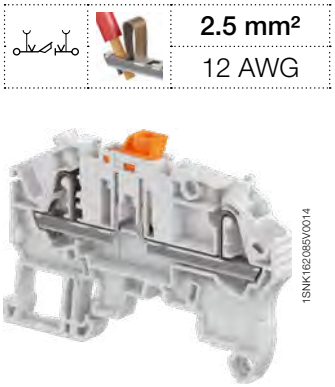

2.5 mm²
12 AWG

ZK2.5-S

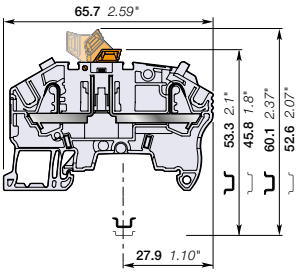

5.2 mm 0.205 in spacing

Description

Combine high performance with compact dimensions: 630 V IEC 300 V UL.
Secure the current measurement:
- for currents below 50 mA, thanks to 2 built in test points DIA 2 mm 0.079 in,
- for currents up to 16 A, by using the TP4 test adapter inserted into the jumper channels.

Ordering details

Description		Color	Type	Part Number		Pkg qty	Weight (1 pce) g
Disconnect	with 2 test sockets DIA 2 mm 0.079 in	Grey	ZK2.5-S	1SNK705310R0000		50	8.10
		Blue	ZK2.5-S-BL	1SNK705320R0000		50	8.10
		Orange	ZK2.5-S-OR	1SNK705330R0000		50	8.10

Main technical data

Connecting capacity		IEC	UL - CSA
1 conductor per clamp	Rigid: Solid/Stranded	0.2 ... 4 mm²	26 ... 12 AWG
	Flexible without ferrule	0.22 ... 2.5 mm²	
	Flexible with non insulated ferrule	0.22 ... 2.5 mm²	26 ... 14 AWG
	Flexible with insulated ferrule	0.22 ... 2.5 mm²	26 ... 14 AWG
2 conductors per clamp	Flexible with twin ferrule	0.22 ... 0.5 mm²	26 ... 20 AWG
Rated current / Rated cross section		20 A / 2.5 mm²	20 A / 12 AWG
Rated short-time withstand current (1s)		300 A	396 A
Rated voltage		630 V	300 V
Impulse withstand voltage		6000 V	
Protection		IP20	NEMA 1

Mounting instructions

Rail		TH 35-7.5, TH 35-15
Wire stripping length		11 mm 0.433 in
Tool (for flexible conductor without ferrule)		Flat screwdriver Ø 3.5 mm Ø 0.138 in

Recommendation for best usage: in horizontal assemblies, disconnect terminal blocks should be mounted with fixed foot on top (power side) so that the disconnect knife does not partially close through gravity. Furthermore, as specified per IEC 60947-7-1, disconnect terminal blocks are intended to be used for temporary disconnection at zero potential and at no load.

The connecting capacity data for one Rigid: Solid/Stranded, or one Flexible conductor (when applicable) is a mandatory information required by IEC, UL and CSA standards (Copper conductors). All other data are provided as supplementary information only. For more details, please consult our CB, UL or CSA certificates and technical datasheet available on http://www.TE.com

CE, CB, RoHS, USR CNR, CSA, EAC, BV, DNV

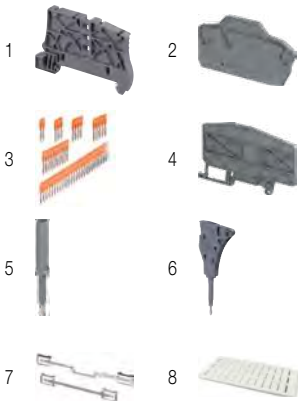

Accessories

	Description			Color	Type	Part Number		Pkg qty	Weight (1 pce) g
1	**End stops**	5.2 mm	0.205 in	Dark grey	BAZ1	1SNK900002R0000		50	5.30
2	**End sections**	2 mm	0.079 in	Dark grey	EK2.5-3P	1SNK705911R0000		20	2.40
3	**Jumper bars**	2 poles	32 A (IEC)	Orange	JB5-2	1SNK905302R0000		50	1.30
		3 poles	32 A (IEC)		JB5-3	1SNK905303R0000		50	2.00
		4 poles	32 A (IEC)		JB5-4	1SNK905304R0000		50	2.70
		5 poles	32 A (IEC)		JB5-5	1SNK905305R0000		50	3.50
		10 poles	32 A (IEC)		JB5-10	1SNK905310R0000		30	7.10
		50 poles	32 A (IEC)		JB5-50	1SNK905350R0000		10	36.00
4	**Circuit separators**	3 mm	0.118 in	Dark grey	CS-R3	1SNK900107R0000		20	6.40
5	**Test adapters**	For test plugs DIA 2 mm 0.079 in		Dark grey	TP2	1SNK900203R0000		20	1.70
		For test plugs DIA 4 mm 0.157 in			TP4	1SNK900205R0000		20	2.40
6	**Test connectors**	5.2 mm 0.205 in spacing		Dark grey	TC5	1SNK900200R0000		10	5.20
		End module, 5.2 mm 0.205 in			TC5-R1	1SNK900201R0000		10	5.20
7	**Shield connectors**				SHBP	1SNK900601R0000		20	4.10
8	**Terminal block markers**	Blank marker		White	MG-CPM 13 41790	1SNB041790R0512		1960	0.23
		Blank card			MC512	1SNK140000R0000		22	9.00
					MC512PA	1SNK149999R0000		20	10.00
		Universal wire markers holder		Grey	UMH	1SNK900611R0000		10	0.20

Complete list of accessories is indicated in the terminal block datasheet including end stops.
Some accessories such as jumper bars may modify the terminal block's ratings: Complete information available in the accessories section of the catalog.

1SNK162036S0201

Technical data valid for copper conductors only.

ZK2.5-S-4P PI-Spring terminal blocks

Disconnect with blade - with test socket - 5.2 mm 0.205 in spacing

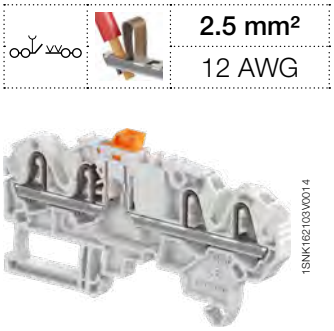

2.5 mm²
12 AWG

1SNK162103V0014

ZK2.5-S-4P

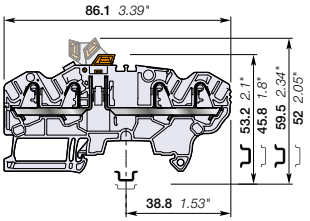

5.2 mm 0.205 in spacing

Description

- Combine high performances with compact dimensions: 630 V IEC 300 V UL,
- Simplify the measurement with 1 built in test point DIA 2 mm 0.079 in (for current below 50mA) and TP... test adapter inserted into one jumper channel,
- Clear marking visibility with SNK top marking location 20% enlarged.

Ordering details

Description		Color	Type	Part Number		Pkg qty	Weight (1 pce) g
Disconnect	with 1 test socket DIA 2 mm 0.079 in	Grey	ZK2.5-S-4P	1SNK705312R0000		50	11.14
		Blue	ZK2.5-S-4P-BL	1SNK705321R0000		50	11.14
		Orange	ZK2.5-S-4P-OR	1SNK705331R0000		50	11.14

Main technical data

Connecting capacity		IEC	UL - CSA
1 conductor per clamp	Rigid: Solid/Stranded	0.2 ... 4 mm²	26 ... 12 AWG
	Flexible without ferrule	0.22 ... 2.5 mm²	
	Flexible with non insulated ferrule	0.22 ... 2.5 mm²	26 ... 14 AWG
	Flexible with insulated ferrule	0.22 ... 2.5 mm²	26 ... 14 AWG
2 conductors per clamp	Flexible with twin ferrule	0.22 ... 0.5 mm²	26 ... 20 AWG
Rated current / Rated cross section		20 A / 2.5 mm²	20 A / 12 AWG
Rated short-time withstand current (1s)		300 A	
Short Circuit Current Rating (with specific conditions)			
Rated voltage		630 V	300 V
Impulse withstand voltage		6000 V	
Protection		IP20	NEMA 1

Mounting instructions

Rail		TH 35-7.5, TH 35-15
Wire stripping length		11 mm 0.433 in
Tool (for flexible conductor without ferrule)		Flat screwdriver Ø 3.5 mm Ø 0.138 in

Recommendation for best usage: in horizontal assemblies, disconnect terminal blocks should be mounted with fixed foot on top (power side) so that the disconnect knife does not partially close through gravity. Furthermore, as specified per IEC 60947-7-1, disconnect terminal blocks are intended to be used for temporary disconnection at zero potential and at no load.

The connecting capacity data for one Rigid: Solid/Stranded, or one Flexible conductor (when applicable) is a mandatory information required by IEC, UL and CSA standards (Copper conductors). All other data are provided as supplementary information only. For more details, please consult our CB, UL or CSA certificates and technical datasheet available on http://www.TE.com

CE CB RoHS USR CNR CSA EAC BV

Accessories

	Description			Color	Type	Part Number		Pkg qty	Weight (1 pce) g
1	**End stops**	5.2 mm	0.205 in	Dark grey	BAZ1	1SNK900002R0000		50	5.30
2	**End sections**	2 mm	0.158 in	Dark grey	EK2.5-S-4P	1SNK705913R0000		20	2.94
3	**Jumper bars**	2 poles	32 A (IEC)	Orange	JB5-2	1SNK905302R0000		50	1.30
		3 poles	32 A (IEC)		JB5-3	1SNK905303R0000		50	2.00
		4 poles	32 A (IEC)		JB5-4	1SNK905304R0000		50	2.70
		5 poles	32 A (IEC)		JB5-5	1SNK905305R0000		50	3.50
		10 poles	32 A (IEC)		JB5-10	1SNK905310R0000		30	7.10
		50 poles	32 A (IEC)		JB5-50	1SNK905350R0000		10	36.00
4	**Circuit separators**	3 mm	0.118 in	Dark grey	CS-R3	1SNK900107R0000		20	6.40
5	**Test adapters**	For test plugs DIA 2 mm 0.079 in		Dark grey	TP2	1SNK900203R0000		20	1.70
		For test plugs DIA 4 mm 0.157 in			TP4	1SNK900205R0000		20	2.40
6	**Test connectors**	5.2 mm 0.205 in spacing		Dark grey	TC5	1SNK900200R0000		10	5.20
		End module, 5.2 mm 0.205 in			TC5-R1	1SNK900201R0000		10	5.20
7	**Terminal block markers**	Blank marker		White	MG-CPM 13 41790	1SNB041790R0512		1960	0.23
		Blank card			MC512	1SNK140000R0000		22	9.00
					MC512PA	1SNK149999R0000		20	10.00
		Universal wire markers holder		Grey	UMH	1SNK900611R0000		10	0.20

Complete list of accessories is indicated in the terminal block datasheet including end stops.
Some accessories such as jumper bars may modify the terminal block's ratings: Complete information available in the accessories section of the catalog.

1SNK162069S0201

Technical data valid for copper conductors only.

ZK2.5-S-R1 PI-Spring terminal blocks

Disconnect with blade - 6 mm 0.236 in spacing

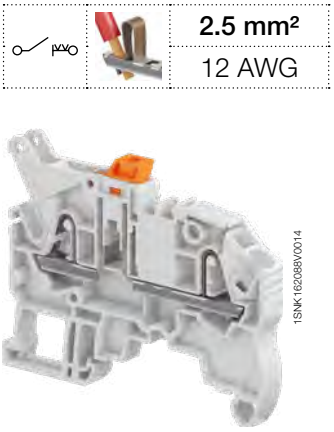

2.5 mm²
12 AWG

Description

Simplify the distribution of circuits in marshalling cabinets thanks to our disconnect terminal blocks with the same profile as ZK2.5-SF fuse.

1SNK162088V0014

ZK2.5-S-R1

Ordering details

Description		Color	Type	Part Number		Pkg qty	Weight (1 pce) g
Disconnect	Profile aligned with ZK2.5-SF	Grey	ZK2.5-S-R1	1SNK706310R0000		50	8.90

Main technical data

Connecting capacity		IEC	UL - CSA
1 conductor per clamp	Rigid: Solid/Stranded	0.2 ... 4 mm²	26 ... 12 AWG
	Flexible without ferrule	0.22 ... 2.5 mm²	
	Flexible with non insulated ferrule	0.22 ... 2.5 mm²	26 ... 14 AWG
	Flexible with insulated ferrule	0.22 ... 2.5 mm²	26 ... 14 AWG
2 conductors per clamp	Flexible with twin ferrule	0.22 ... 0.5 mm²	26 ... 20 AWG
Rated current / Rated cross section		20 A / 2.5 mm²	20 A / 12 AWG
Rated short-time withstand current (1s)		300 A	396 A
Rated voltage		630 V	300 V
Impulse withstand voltage		6000 V	
Protection		IP20	NEMA 1

Mounting instructions

Rail		TH 35-7.5, TH 35-15
Wire stripping length		11 mm 0.433 in
Tool (for flexible conductor without ferrule)		Flat screwdriver Ø 3.5 mm Ø 0.138 in

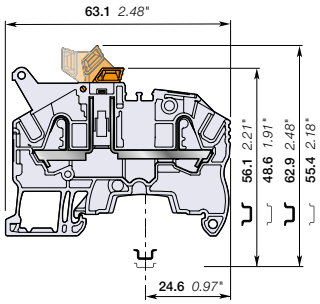

6 mm 0.236 in spacing

Recommendation for best usage: in horizontal assemblies, disconnect terminal blocks should be mounted with fixed foot on top (power side) so that the disconnect knife does not partially close through gravity. Furthermore, as specified per IEC 60947-7-1, disconnect terminal blocks are intended to be used for temporary disconnection at zero potential and at no load.

The connecting capacity data for one Rigid: Solid/Stranded, or one Flexible conductor (when applicable) is a mandatory information required by IEC, UL and CSA standards (Copper conductors). All other data are provided as supplementary information only. For more details, please consult our CB, UL or CSA certificates and technical datasheet available on http://www.TE.com

CE CB RoHS USR CNR CSA EAC BV DNV

Accessories

	Description			Color	Type	Part Number		Pkg qty	Weight (1 pce) g
1	End stops	5.2 mm	0.205 in	Dark grey	BAZ1	1SNK900002R0000		50	5.30
2	End sections	2 mm	0.079 in	Dark grey	EK2.5-3P	1SNK705911R0000		20	2.40
3	Jumper bars	2 poles	41 A (IEC)	Orange	JB6-2	1SNK906302R0000		50	1.30
		3 poles	41 A (IEC)		JB6-3	1SNK906303R0000		50	2.10
		4 poles	41 A (IEC)		JB6-4	1SNK906304R0000		50	2.90
		5 poles	41 A (IEC)		JB6-5	1SNK906305R0000		50	3.60
		10 poles	41 A (IEC)		JB6-10	1SNK906310R0000		20	7.40
		50 poles	41 A (IEC)		JB6-50	1SNK906350R0000		10	38.10
4	Circuit separators	3 mm	0.118 in	Dark grey	CS-R3	1SNK900107R0000		20	6.40
5	Test adapters	For test plugs DIA 2 mm 0.079 in		Dark grey	TP2	1SNK900203R0000		20	1.70
		For test plugs DIA 4 mm 0.157 in			TP4	1SNK900205R0000		20	2.40
6	Test connectors	End module, 5.2 mm 0.205 in		Dark grey	TC5-R1	1SNK900201R0000		10	5.20
7	Spacers	0.8 mm	0.031 in	Dark grey	ES-TC6	1SNK900105R0000		10	0.80
8	Terminal block markers	Blank marker		White	MG-CPM 13 41791	1SNB041791R0612		1680	0.27
		Blank card			MC612	1SNK150000R0000		22	10.00
					MC612PA	1SNK159999R0000		20	11.00
		Universal wire markers holder		Grey	UMH	1SNK900611R0000		10	0.20

Complete list of accessories is indicated in the terminal block datasheet including end stops.
Some accessories such as jumper bars may modify the terminal block's ratings: Complete information available in the accessories section of the catalog.

ZK4-3P ZK2.5-SF

PI-Spring terminal blocks

Description	Color	Type	Part Number		Pkg qty	Weight (1 pce) g
Feed-through	Grey	ZK4-3P	1SNK706011R0000		50	11.00
Fuse	Grey, dark grey	ZK2.5-SF	1SNK706410R0000		50	16.20

1SNK162037S0201

Technical data valid for copper conductors only.

ZK2.5-SP PI-Spring terminal blocks

Disconnect with plug - with test sockets - 5.2 mm 0.205 in spacing

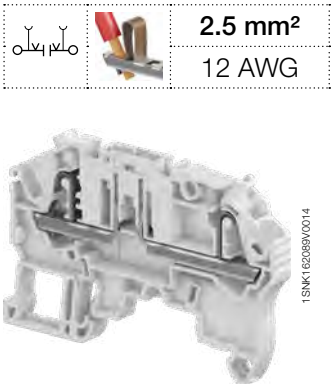

2.5 mm²
12 AWG

1SNK162089V0014

ZK2.5-SP

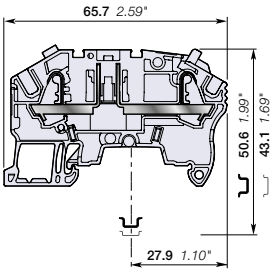

5.2 mm 0.205 in spacing

Description

The flexible solution for fitting the component of your choice in series with our quick-fitting PG5 component holder plug:

– compatible with components of 8.8 x 3.2 mm 0.346 x 0.125 in, such as resistors, diodes or mini axial fuses.

Ordering details

Description		Color	Type	Part Number		Pkg qty	Weight (1 pce) g
Disconnect	with 2 test sockets DIA 2 mm 0.079 in	Grey	ZK2.5-SP	1SNK705311R0000		50	11.50

Main technical data

Connecting capacity		IEC	UL - CSA
1 conductor per clamp	Rigid: Solid/Stranded	0.2 ... 4 mm²	26 ... 12 AWG
	Flexible without ferrule	0.22 ... 2.5 mm²	
	Flexible with non insulated ferrule	0.22 ... 2.5 mm²	26 ... 14 AWG
	Flexible with insulated ferrule	0.22 ... 2.5 mm²	26 ... 14 AWG
2 conductors per clamp	Flexible with twin ferrule	0.22 ... 0.5 mm²	26 ... 20 AWG
Rated current / Rated cross section		17 A / 2.5 mm²	18 A / 12 AWG
Rated short-time withstand current (1s)		300 A	396 A
Rated voltage		630 V	300 V
Impulse withstand voltage		6000 V	
Protection		IP20	NEMA 1

Mounting instructions

Rail	TH 35-7.5, TH 35-15
Wire stripping length	11 mm 0.433 in
Tool (for flexible conductor without ferrule)	Flat screwdriver Ø 3.5 mm Ø 0.138 in

The connecting capacity data for one Rigid: Solid/Stranded, or one Flexible conductor (when applicable) is a mandatory information required by IEC, UL and CSA standards (Copper conductors). All other data are provided as supplementary information only. For more details, please consult our CB, UL or CSA certificates and technical datasheet available on http://www.TE.com

CE, CB, RoHS, USR CNR, CSA, EAC, BV, DNV

Accessories

	Description			Color	Type	Part Number		Pkg qty	Weight (1 pce) g
1	**End stops**	5.2 mm	0.205 in	Dark grey	BAZ1	1SNK900002R0000		50	5.30
2	**End sections**	2 mm	0.079 in	Dark grey	EK2.5-3P	1SNK705911R0000		20	2.40
3	**Jumper bars**	2 poles	32 A (IEC)	Orange	JB5-2	1SNK905302R0000		50	1.30
		3 poles	32 A (IEC)		JB5-3	1SNK905303R0000		50	2.00
		4 poles	32 A (IEC)		JB5-4	1SNK905304R0000		50	2.70
		5 poles	32 A (IEC)		JB5-5	1SNK905305R0000		50	3.50
		10 poles	32 A (IEC)		JB5-10	1SNK905310R0000		30	7.10
		50 poles	32 A (IEC)		JB5-50	1SNK905350R0000		10	36.00
4	**Circuit separators**	3 mm	0.118 in	Dark grey	CS-R3	1SNK900107R0000		20	6.40
5	**Test adapters**	For test plugs DIA 2 mm 0.079 in		Dark grey	TP2	1SNK900203R0000		20	1.70
		For test plugs DIA 4 mm 0.157 in			TP4	1SNK900205R0000		20	2.40
6	**Test connectors**	5.2 mm 0.205 in spacing		Dark grey	TC5	1SNK900200R0000		10	5.20
		End module, 5.2 mm 0.205 in			TC5-R1	1SNK900201R0000		10	5.20
7	**Shield connectors**				SHBP	1SNK900601R0000		20	4.10
8	**Component plugs**	Components in series with circuit		Dark grey	PG5	1SNK900401R0000		20	3.50
9	**Disconnect plugs**	Equipped with linking bar		Orange	PG5-R1	1SNK900402R0000		20	3.50
10	**Terminal block markers**	Blank marker		White	MG-CPM 13 41790	1SNB041790R0512		1960	0.23
		Blank card			MC512	1SNK140000R0000		22	9.00
					MC512PA	1SNK149999R0000		20	10.00
		Universal wire markers holder		Grey	UMH	1SNK900611R0000		10	0.20

Complete list of accessories is indicated in the terminal block datasheet including end stops.
Some accessories such as jumper bars may modify the terminal block's ratings: Complete information available in the accessories section of the catalog.

1SNK162038S0201

Technical data valid for copper conductors only.

ZK2.5-SP-4P PI-Spring terminal blocks

Disconnect with plug - with test socket - 5.2 mm 0.205 in spacing

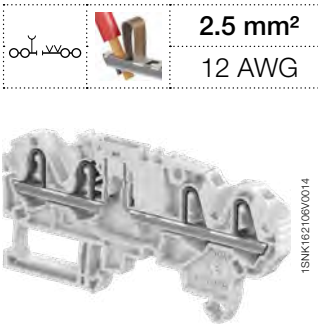

ZK2.5-SP-4P

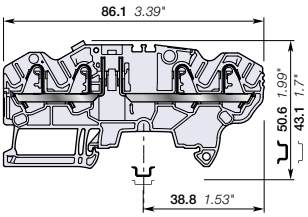

5.2 mm 0.205 in spacing

	2.5 mm²
	12 AWG

Description

The flexible solution for fitting the component of your choice in series with our quick-fitting PG5 component holder plug:

– compatible with components of 8.8 x 3.2 mm 0.346 x 0.125 in, such as resistors, diodes or mini axial fuses.

Ordering details

Description		Color	Type	Part Number		Pkg qty	Weight (1 pce) g
Disconnect	with 1 test socket DIA 2 mm 0.079 in	Grey	ZK2.5-SP-4P	1SNK705313R0000		50	10.67

Main technical data

Connecting capacity		IEC	UL - CSA
1 conductor per clamp	Rigid: Solid/Stranded	0.2 ... 4 mm²	26 ... 12 AWG
	Flexible without ferrule	0.22 ... 2.5 mm²	
	Flexible with non insulated ferrule	0.22 ... 2.5 mm²	26 ... 14 AWG
	Flexible with insulated ferrule	0.22 ... 2.5 mm²	26 ... 14 AWG
2 conductors per clamp	Flexible with twin ferrule	0.22 ... 0.5 mm²	26 ... 20 AWG
Rated current / Rated cross section		17 A / 2.5 mm²	18 A / 12 AWG
Rated short-time withstand current (1s)		300 A	
Short Circuit Current Rating (with specific conditions)			
Rated voltage		630 V	300 V
Impulse withstand voltage		6000 V	
Protection		IP20	NEMA 1

Mounting instructions

Rail		TH 35-7.5, TH 35-15
Wire stripping length		11 mm 0.433 in
Tool (for flexible conductor without ferrule)		Flat screwdriver Ø 3.5 mm Ø 0.138 in

The connecting capacity data for one Rigid: Solid/Stranded, or one Flexible conductor (when applicable) is a mandatory information required by IEC, UL and CSA standards (Copper conductors). All other data are provided as supplementary information only. For more details, please consult our CB, UL or CSA certificates and technical datasheet available on http://www.TE.com

CE CB RoHS USR CNR CSA EAC BV

Accessories

	Description			Color	Type	Part Number		Pkg qty	Weight (1 pce) g
1	**End stops**	5.2 mm	0.205 in	Dark grey	BAZ1	1SNK900002R0000		50	5.30
2	**End sections**	2 mm	0.158 in	Dark grey	EK2.5-S-4P	1SNK705913R0000		20	2.94
3	**Jumper bars**	2 poles	32 A (IEC)	Orange	JB5-2	1SNK905302R0000		50	1.30
		3 poles	32 A (IEC)		JB5-3	1SNK905303R0000		50	2.00
		4 poles	32 A (IEC)		JB5-4	1SNK905304R0000		50	2.70
		5 poles	32 A (IEC)		JB5-5	1SNK905305R0000		50	3.50
		10 poles	32 A (IEC)		JB5-10	1SNK905310R0000		30	7.10
		50 poles	32 A (IEC)		JB5-50	1SNK905350R0000		10	36.00
4	**Circuit separators**	3 mm	0.118 in	Dark grey	CS-R3	1SNK900107R0000		20	6.40
5	**Test adapters**	For test plugs DIA 2 mm 0.079 in		Dark grey	TP2	1SNK900203R0000		20	1.70
		For test plugs DIA 4 mm 0.157 in			TP4	1SNK900205R0000		20	2.40
6	**Test connectors**	5.2 mm 0.205 in spacing		Dark grey	TC5	1SNK900200R0000		10	5.20
		End module, 5.2 mm 0.205 in			TC5-R1	1SNK900201R0000		10	5.20
7	**Component plugs**	Components in series with circuit		Dark grey	PG5	1SNK900401R0000		20	3.50
8	**Disconnect plugs**	Equipped with linking bar		Orange	PG5-R1	1SNK900402R0000		20	3.50
9	**Terminal block markers**	Blank marker		White	MG-CPM 13 41790	1SNB041790R0512		1960	0.23
		Blank card			MC512	1SNK140000R0000		22	9.00
					MC512PA	1SNK149999R0000		20	10.00
		Universal wire markers holder		Grey	UMH	1SNK900611R0000		10	0.20

Complete list of accessories is indicated in the terminal block datasheet including end stops.
Some accessories such as jumper bars may modify the terminal block's ratings: Complete information available in the accessories section of the catalog.

1SNK162070S0201

Technical data valid for copper conductors only.

ZK2.5-SF PI-Spring terminal blocks
For 5x20 fuses - 6 mm 0.236 in spacing

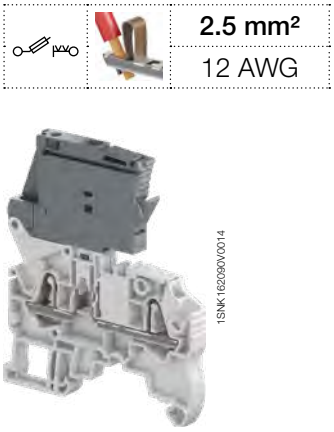

ZK2.5-SF

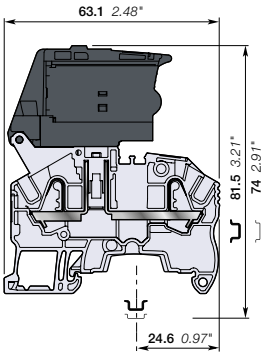

6 mm 0.236 in spacing

2.5 mm²
12 AWG

Description

Protect your circuits with 5x20 fuse terminal blocks compliant with IEC 60947-7-3 standard (fuse not supplied with the terminal blocks),

– Simplify the distribution thanks to the 2 jumper channels aligned with ZK4-3P feed-through and ZK2.5-S-R1 disconnect terminal blocks.

Ordering details

Description	Color	Type	Part Number		Pkg qty	Weight (1 pce) g
Fuse	Grey, dark grey	ZK2.5-SF	1SNK706410R0000		50	16.20

Main technical data

Connecting capacity		IEC	UL - CSA
1 conductor per clamp	Rigid: Solid/Stranded	0.2 ... 4 mm²	26 ... 12 AWG
	Flexible without ferrule	0.22 ... 2.5 mm²	
	Flexible with non insulated ferrule	0.22 ... 2.5 mm²	26 ... 14 AWG
	Flexible with insulated ferrule	0.22 ... 2.5 mm²	26 ... 14 AWG
2 conductors per clamp	Flexible with twin ferrule	0.22 ... 0.5 mm²	26 ... 20 AWG
Rated current / Rated cross section		6.3 A / 2.5 mm²	16 A / 12 AWG
Rated short-time withstand current (1s)			396 A
Rated voltage		500 V	300 V
Impulse withstand voltage		6000 V	
Protection		IP20	NEMA 1

Mounting instructions

Rail		TH 35-7.5, TH 35-15
Wire stripping length		11 mm 0.433 in
Tool (for flexible conductor without ferrule)		Flat screwdriver Ø 3.5 mm Ø 0.138 in

The fuse holder must be first disconnected prior any fuse replacement. Mount your fuse safely without touching any active part: put the fuse into the hooks of the fuse holder shutter; at the closing of the shutter, the fuse is perfectly in place in the fuse holder.

Separate arrangement		Assembly composed of 1 fuse terminal block in between non fuse terminal blocks	Overload and short-circuit protection	2.5 W
			Exclusive short-circuit protection	4 W
Compound arrangement		Assembly composed of 5 fuse terminal blocks	Overload and short-circuit protection	1.6 W
			Exclusive short-circuit protection	4 W

The connecting capacity data for one Rigid: Solid/Stranded, or one Flexible conductor (when applicable) is a mandatory information required by IEC, UL and CSA standards (Copper conductors). All other data are provided as supplementary information only. For more details, please consult our CB, UL or CSA certificates and technical datasheet available on http://www.TE.com

CE CB RoHS USR CNR CSA EAC BV DNV

Accessories

	Description			Color	Type	Part Number		Pkg qty	Weight (1 pce) g
1	End stops	5.2 mm	0.205 in	Dark grey	BAZ1	1SNK900002R0000		50	5.30
2	End sections	2 mm	0.079 in	Dark grey	EK2.5-3P	1SNK705911R0000		20	2.40
3	Jumper bars	2 poles	41 A (IEC)	Orange	JB6-2	1SNK906302R0000		50	1.30
		3 poles	41 A (IEC)		JB6-3	1SNK906303R0000		50	2.10
		4 poles	41 A (IEC)		JB6-4	1SNK906304R0000		50	2.90
		5 poles	41 A (IEC)		JB6-5	1SNK906305R0000		50	3.60
		10 poles	41 A (IEC)		JB6-10	1SNK906310R0000		20	7.40
		50 poles	41 A (IEC)		JB6-50	1SNK906350R0000		10	38.10
4	Circuit separators	3 mm	0.118 in	Dark grey	CS-R3	1SNK900107R0000		20	6.40
5	Test adapters	For test plugs DIA 2 mm 0.079 in		Dark grey	TP2	1SNK900203R0000		20	1.70
		For test plugs DIA 4 mm 0.157 in			TP4	1SNK900205R0000		20	2.40
6	Test connectors	End module, 5.2 mm 0.205 in		Dark grey	TC5-R1	1SNK900201R0000		10	5.20
7	Spacers	0.8 mm	0.031 in	Dark grey	ES-TC6	1SNK900105R0000		10	0.80
8	Terminal block markers	Blank marker		White	MG-CPM 13 41791	1SNB041791R0612		1680	0.27
		Blank card			MC612	1SNK150000R0000		22	10.00
					MC612PA	1SNK159999R0000		20	11.00

Complete list of accessories is indicated in the terminal block datasheet including end stops.
Some accessories such as jumper bars may modify the terminal block's ratings: Complete information available in the accessories section of the catalog.

1SNK162021S0201

Technical data valid for copper conductors only.

ZK2.5-SF-R PI-Spring terminal blocks

For 5x20 fuses - with blown fuse indicator - 6 mm 0.236 in spacing

2.5 mm²	
12 AWG	

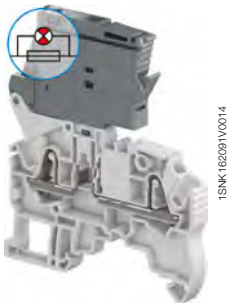

ZK2.5-SF-R

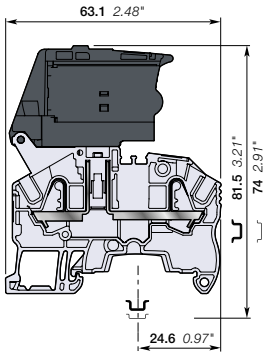

6 mm 0.236 in spacing

Description

- Protect your circuits with 5x20 fuse terminal blocks compliant with IEC 60947-7-3 standard (fuse not supplied with the terminal blocks),
- Simplify the distribution thanks to the 2 jumper channels aligned with ZK4-3P feed-through and ZK2.5-S-R1 disconnect terminal blocks,
- Quickly identify the defective circuit thanks to the blown fuse indicator (with leakage current < 0.5 mA).

Ordering details

Description		Color	Type	Part Number		Pkg qty	Weight (1 pce) g
Fuse	with blown fuse indicator 24 ... 110 V AC / DC	Grey, dark grey	ZK2.5-SF-R1	1SNK706411R0000		50	16.30
	with blown fuse indicator 115 ... 250 V AC / DC		ZK2.5-SF-R3	1SNK706412R0000		50	16.30

Main technical data

Connecting capacity		IEC	UL - CSA
1 conductor per clamp	Rigid: Solid/Stranded	0.2 ... 4 mm²	26 ... 12 AWG
	Flexible without ferrule	0.22 ... 2.5 mm²	
	Flexible with non insulated ferrule	0.22 ... 2.5 mm²	26 ... 14 AWG
	Flexible with insulated ferrule	0.22 ... 2.5 mm²	26 ... 14 AWG
2 conductors per clamp	Flexible with twin ferrule	0.22 ... 0.5 mm²	26 ... 20 AWG
Rated current / Rated cross section		6.3 A / 2.5 mm²	16 A / 12 AWG
Rated short-time withstand current (1s)			396 A
Rated voltage		500 V	300 V
Impulse withstand voltage		6000 V	
Protection		IP20	NEMA 1

Mounting instructions

Rail		TH 35-7.5, TH 35-15
Wire stripping length		11 mm 0.433 in
Tool (for flexible conductor without ferrule)		Flat screwdriver Ø 3.5 mm Ø 0.138 in

The fuse holder must be first disconnected prior any fuse replacement. Mount your fuse safely without touching any active part: put the fuse into the hooks of the fuse holder shutter; at the closing of the shutter, the fuse is perfectly in place in the fuse holder.

Separate arrangement	Assembly composed of 1 fuse terminal block in between non fuse terminal blocks	Overload and short-circuit protection	2.5 W
		Exclusive short-circuit protection	4 W
Compound arrangement	Assembly composed of 5 fuse terminal blocks	Overload and short-circuit protection	1.6 W
		Exclusive short-circuit protection	4 W

The connecting capacity data for one Rigid: Solid/Stranded, or one Flexible conductor (when applicable) is a mandatory information required by IEC, UL and CSA standards (Copper conductors). All other data are provided as supplementary information only. For more details, please consult our CB, UL or CSA certificates and technical datasheet available on http://www.TE.com

CE CB RoHS USR CNR CSA EAC BV DNV

Accessories

	Description			Color	Type	Part Number		Pkg qty	Weight (1 pce) g
1	**End stops**	5.2 mm	0.205 in	Dark grey	BAZ1	1SNK900002R0000		50	5.30
2	**End sections**	2 mm	0.079 in	Dark grey	EK2.5-3P	1SNK705911R0000		20	2.40
3	**Jumper bars**	2 poles	41 A (IEC)	Orange	JB6-2	1SNK906302R0000		50	1.30
		3 poles	41 A (IEC)		JB6-3	1SNK906303R0000		50	2.10
		4 poles	41 A (IEC)		JB6-4	1SNK906304R0000		50	2.90
		5 poles	41 A (IEC)		JB6-5	1SNK906305R0000		50	3.60
		10 poles	41 A (IEC)		JB6-10	1SNK906310R0000		20	7.40
		50 poles	41 A (IEC)		JB6-50	1SNK906350R0000		10	38.10
4	**Circuit separators**	3 mm	0.118 in	Dark grey	CS-R3	1SNK900107R0000		20	6.40
5	**Test adapters**	For test plugs DIA 2 mm 0.079 in		Dark grey	TP2	1SNK900203R0000		20	1.70
		For test plugs DIA 4 mm 0.157 in			TP4	1SNK900205R0000		20	2.40
6	**Test connectors**	End module, 5.2 mm 0.205 in		Dark grey	TC5-R1	1SNK900201R0000		10	5.20
7	**Spacers**	0.8 mm	0.031 in	Dark grey	ES-TC6	1SNK900105R0000		10	0.80
8	**Terminal block markers**	Blank marker		White	MG-CPM 13 41791	1SNB041791R0612		1680	0.27
		Blank card			MC612	1SNK150000R0000		22	10.00
					MC612PA	1SNK159999R0000		20	11.00

Complete list of accessories is indicated in the terminal block datasheet including end stops.
Some accessories such as jumper bars may modify the terminal block's ratings: Complete information available in the accessories section of the catalog.

1SNK162022S0201

Technical data valid for copper conductors only.

ZK2.5-D2 PI-Spring terminal blocks

Double deck with 2 feed-through circuits - 5.2 mm 0.205 in spacing

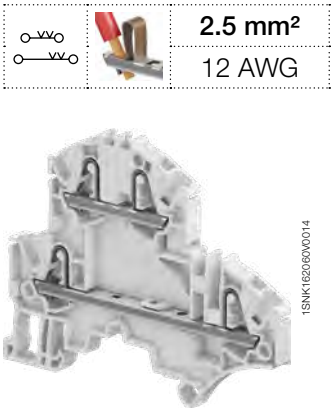

2.5 mm²	
12 AWG	

Description

Combine high performance with compact dimensions:

- 800 V IEC 600 V UL,
- 2 jumper channels and a large input and output marker zone on each deck.

1SNK162060V0014

ZK2.5-D2

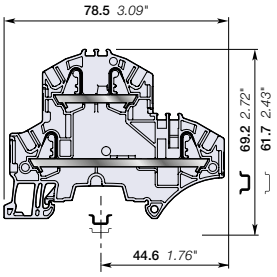

5.2 mm 0.205 in spacing

Ordering details

Description		Color	Type	Part Number		Pkg qty	Weight (1 pce) g
Feed-through	2 feed-through circuits	Grey	ZK2.5-D2	1SNK705210R0000		50	11.20
		Blue	ZK2.5-D2-BL	1SNK705220R0000		50	11.20

Main technical data

Connecting capacity		IEC	UL - CSA
1 conductor per clamp	Rigid: Solid/Stranded	0.2 ... 4 mm²	26 ... 12 AWG
	Flexible without ferrule	0.22 ... 2.5 mm²	
	Flexible with non insulated ferrule	0.22 ... 2.5 mm²	26 ... 14 AWG
	Flexible with insulated ferrule	0.22 ... 2.5 mm²	26 ... 14 AWG
2 conductors per clamp	Flexible with twin ferrule	0.22 ... 0.5 mm²	26 ... 20 AWG
Rated current / Rated cross section		24 A / 2.5 mm²	20 A / 12 AWG
Rated short-time withstand current (1s)		300 A	396 A
Short Circuit Current Rating (with specific conditions)			100 kA
Rated voltage		800 V	600 V
Impulse withstand voltage		8000 V	
Protection		IP20	NEMA 1
Increased safety Ex e		693 V 21 A IEC/EN 60079-7 - IM2 II 2 GD Ex eb I/IIC/IIIC	

Mounting instructions

Rail		TH 35-7.5, TH 35-15
Wire stripping length		11 mm 0.433 in
Tool (for flexible conductor without ferrule)		Flat screwdriver Ø 3.5 mm Ø 0.138 in

The connecting capacity data for one Rigid: Solid/Stranded, or one Flexible conductor (when applicable) is a mandatory information required by IEC, UL and CSA standards (Copper conductors). All other data are provided as supplementary information only. For more details, please consult our CB, UL or CSA certificates and technical datasheet available on http://www.TE.com

CE, CB, RoHS, USR CNR, CSA, EAC Ex, ATEX, IECEx, Haz Loc, BV, DNV

Accessories

	Description			Color	Type	Part Number		Pkg qty	Weight (1 pce) g
1	**End stops**	10 mm	0.394 in	Dark grey	BAZH1	1SNK900102R0000		20	24.00
2	**End sections**	2 mm	0.079 in	Dark grey	EK2.5-D2	1SNK705960R0000		20	3.40
3	**Jumper bars**	2 poles	32 A (IEC)	Orange	JB5-2	1SNK905302R0000		50	1.30
		3 poles	32 A (IEC)		JB5-3	1SNK905303R0000		50	2.00
		4 poles	32 A (IEC)		JB5-4	1SNK905304R0000		50	2.70
		5 poles	32 A (IEC)		JB5-5	1SNK905305R0000		50	3.50
		10 poles	32 A (IEC)		JB5-10	1SNK905310R0000		30	7.10
		50 poles	32 A (IEC)		JB5-50	1SNK905350R0000		10	36.00
4	**Test adapters**	For test plugs DIA 2 mm 0.079 in		Dark grey	TP2	1SNK900203R0000		20	1.70
		For test plugs DIA 4 mm 0.157 in			TP4	1SNK900205R0000		20	2.40
5	**Test connectors**	5.2 mm 0.205 in spacing		Dark grey	TC5	1SNK900200R0000		10	5.20
		End module, 5.2 mm 0.205 in			TC5-R1	1SNK900201R0000		10	5.20
6	**Shield connectors**				SHB	1SNK900602R0000		20	4.90
7	**Label holders**			Dark grey	LH-J	1SNK900606R0000		100	0.73
8	**Terminal block markers**	Blank marker		White	MG-CPM 13 41790	1SNB041790R0512		1960	0.23
		Blank card			MC512	1SNK140000R0000		22	9.00
					MC512PA	1SNK149999R0000		20	10.00
		Universal wire markers holder		Grey	UMH	1SNK900611R0000		10	0.20

Complete list of accessories is indicated in the terminal block datasheet including end stops.
Some accessories such as jumper bars may modify the terminal block's ratings: Complete information available in the accessories section of the catalog.

Ground PI-Spring terminal blocks

Description		Color	Type	Part Number		Pkg qty	Weight (1 pce) g
Ground	Profile aligned with ZK2.5-D2 and ZK2.5-D1	Green-yellow	ZK2.5-D1-PE	1SNK705250R0000		20	15.70

1SNK162033S0201

Technical data valid for copper conductors only.

ZK2.5-D1 PI-Spring terminal blocks

Double deck with 1 feed-through circuit - 5.2 mm 0.205 in spacing

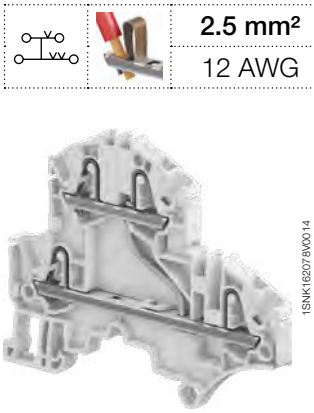

2.5 mm²
12 AWG

1SNK162078V0014

ZK2.5-D1

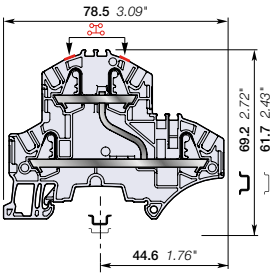

5.2 mm 0.205 in spacing

Description

– Find the same functionalities as ZK2.5-D2 and ease one potential distribution on 4 independent connections.

Ordering details

Description		Color	Type	Part Number		Pkg qty	Weight (1 pce) g
Feed-through	1 feed-through circuit	Grey	ZK2.5-D1	1SNK705211R0000		50	11.20

Main technical data

Connecting capacity		IEC	UL - CSA
1 conductor per clamp	Rigid: Solid/Stranded	0.2 ... 4 mm²	26 ... 12 AWG
	Flexible without ferrule	0.22 ... 2.5 mm²	
	Flexible with non insulated ferrule	0.22 ... 2.5 mm²	26 ... 14 AWG
	Flexible with insulated ferrule	0.22 ... 2.5 mm²	26 ... 14 AWG
2 conductors per clamp	Flexible with twin ferrule	0.22 ... 0.5 mm²	26 ... 20 AWG
Rated current / Rated cross section		24 A / 2.5 mm²	20 A / 12 AWG
Rated short-time withstand current (1s)		300 A	396 A
Short Circuit Current Rating (with specific conditions)			100 kA
Rated voltage		800 V	600 V
Impulse withstand voltage		8000 V	
Protection		IP20	NEMA 1
Increased safety Ex e		693 V 21 A IEC/EN 60079-7 - IM2 II 2 GD Ex eb I/IIC/IIIC	

Mounting instructions

Rail	TH 35-7.5, TH 35-15
Wire stripping length	11 mm 0.433 in
Tool (for flexible conductor without ferrule)	Flat screwdriver Ø 3.5 mm Ø 0.138 in

The connecting capacity data for one Rigid: Solid/Stranded, or one Flexible conductor (when applicable) is a mandatory information required by IEC, UL and CSA standards (Copper conductors). All other data are provided as supplementary information only. For more details, please consult our CB, UL or CSA certificates and technical datasheet available on http://www.TE.com

CE, CB, RoHS, USR CNR, CSA, EAC Ex, ATEX, IECEx, Haz Loc, BV, DNV

Accessories

	Description			Color	Type	Part Number		Pkg qty	Weight (1 pce) g
1	**End stops**	10 mm	0.394 in	Dark grey	BAZH1	1SNK900102R0000		20	24.00
2	**End sections**	2 mm	0.079 in	Dark grey	EK2.5-D2	1SNK705960R0000		20	3.40
3	**Jumper bars**	2 poles	32 A (IEC)	Orange	JB5-2	1SNK905302R0000		50	1.30
		3 poles	32 A (IEC)		JB5-3	1SNK905303R0000		50	2.00
		4 poles	32 A (IEC)		JB5-4	1SNK905304R0000		50	2.70
		5 poles	32 A (IEC)		JB5-5	1SNK905305R0000		50	3.50
		10 poles	32 A (IEC)		JB5-10	1SNK905310R0000		30	7.10
		50 poles	32 A (IEC)		JB5-50	1SNK905350R0000		10	36.00
4	**Test adapters**	For test plugs DIA 2 mm 0.079 in		Dark grey	TP2	1SNK900203R0000		20	1.70
		For test plugs DIA 4 mm 0.157 in			TP4	1SNK900205R0000		20	2.40
5	**Test connectors**	5.2 mm 0.205 in spacing		Dark grey	TC5	1SNK900200R0000		10	5.20
		End module, 5.2 mm 0.205 in			TC5-R1	1SNK900201R0000		10	5.20
6	**Shield connectors**				SHB	1SNK900602R0000		20	4.90
7	**Label holders**			Dark grey	LH-J	1SNK900606R0000		100	0.73
8	**Terminal block markers**	Blank marker		White	MG-CPM 13 41790	1SNB041790R0512		1960	0.23
		Blank card			MC512	1SNK140000R0000		22	9.00
					MC512PA	1SNK149999R0000		20	10.00
		Universal wire markers holder		Grey	UMH	1SNK900611R0000		10	0.20

Complete list of accessories is indicated in the terminal block datasheet including end stops.
Some accessories such as jumper bars may modify the terminal block's ratings: Complete information available in the accessories section of the catalog.

Ground PI-Spring terminal blocks

Description		Color	Type	Part Number		Pkg qty	Weight (1 pce) g
Ground	Profile aligned with ZK2.5-D2 and ZK2.5-D1	Green-yellow	ZK2.5-D1-PE	1SNK705250R0000		20	15.70

1SNK162035S0201

Technical data valid for copper conductors only.

ZK2.5-D2-PE PI-Spring terminal blocks

Double deck with 1 feed-through circuit and 1 ground circuit - 5.2 mm 0.205 in spacing

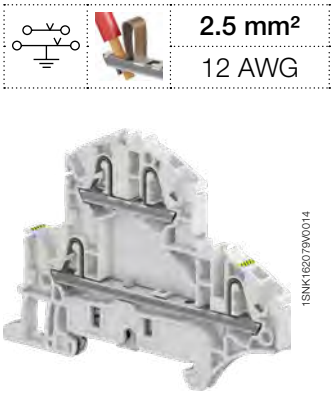

2.5 mm²
12 AWG

1SNK162079W0014

ZK2.5-D2-PE

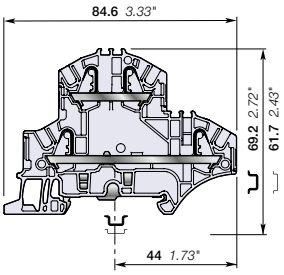

5.2 mm 0.205 in spacing

Description

Combine high performance with compact dimensions:

- 800 V IEC 600 V UL,
- 1 feed through circuit and 1 ground circuit in just 5.2 mm 0.205 in spacing,
- 2 jumper channels and a large input and output marker zone on each deck,
- designed for easy wiring.

Ordering details

Description		Color	Type	Part Number		Pkg qty	Weight (1 pce) g
Feed-through + ground	1 feed-through circuit and 1 ground circuit	Grey, Green-yellow	ZK2.5-D2-PE	1SNK705212R0000		20	15.70

Main technical data

Connecting capacity		IEC	UL - CSA
1 conductor per clamp	Rigid: Solid/Stranded	0.2 ... 4 mm²	26 ... 12 AWG
	Flexible without ferrule	0.22 ... 2.5 mm²	
	Flexible with non insulated ferrule	0.22 ... 2.5 mm²	26 ... 14 AWG
	Flexible with insulated ferrule	0.22 ... 2.5 mm²	26 ... 14 AWG
2 conductors per clamp	Flexible with twin ferrule	0.22 ... 0.5 mm²	26 ... 20 AWG
Rated current / Rated cross section		24 A / 2.5 mm²	20 A / 12 AWG
Rated short-time withstand current (1s)		300 A	396 A
Short Circuit Current Rating (with specific conditions)			
Rated voltage		800 V	600 V
Impulse withstand voltage		8000 V	
Protection		IP20	NEMA 1
Increased safety Ex e		693 V 21 A IEC/EN 60079-7 - IM2 II 2 GD Ex eb I/IIC/IIIC	

Mounting instructions

Rail		TH 35-7.5, TH 35-15
Wire stripping length		11 mm 0.433 in
Tool (for flexible conductor without ferrule)		Flat screwdriver Ø 3.5 mm Ø 0.138 in

The connecting capacity data for one Rigid: Solid/Stranded, or one Flexible conductor (when applicable) is a mandatory information required by IEC, UL and CSA standards (Copper conductors). All other data are provided as supplementary information only. For more details, please consult our CB, UL or CSA certificates and technical datasheet available on http://www.TE.com

CE, CB, RoHS, USR CNR, CSA, EAC Ex, ATEX, IECEx, Haz Loc, BV, DNV

Accessories

	Description			Color	Type	Part Number		Pkg qty	Weight (1 pce) g
1	**End stops**	10 mm	0.394 in	Dark grey	BAZH1	1SNK900102R0000		20	24.00
2	**End sections**	2 mm	0.079 in	Dark grey	EK2.5-D2	1SNK705960R0000		20	3.40
3	**Jumper bars**	2 poles	32 A (IEC)	Orange	JB5-2	1SNK905302R0000		50	1.30
		3 poles	32 A (IEC)		JB5-3	1SNK905303R0000		50	2.00
		4 poles	32 A (IEC)		JB5-4	1SNK905304R0000		50	2.70
		5 poles	32 A (IEC)		JB5-5	1SNK905305R0000		50	3.50
		10 poles	32 A (IEC)		JB5-10	1SNK905310R0000		30	7.10
		50 poles	32 A (IEC)		JB5-50	1SNK905350R0000		10	36.00
4	**Test adapters**	For test plugs DIA 2 mm 0.079 in		Dark grey	TP2	1SNK900203R0000		20	1.70
		For test plugs DIA 4 mm 0.157 in			TP4	1SNK900205R0000		20	2.40
5	**Test connectors**	5.2 mm 0.205 in spacing		Dark grey	TC5	1SNK900200R0000		10	5.20
		End module, 5.2 mm 0.205 in			TC5-R1	1SNK900201R0000		10	5.20
6	**Shield connectors**				SHB	1SNK900602R0000		20	4.90
7	**Label holders**			Dark grey	LH-J	1SNK900606R0000		100	0.73
8	**Terminal block markers**	Blank marker		White	MG-CPM 13 41790	1SNB041790R0512		1960	0.23
		Blank card			MC512	1SNK140000R0000		22	9.00
					MC512PA	1SNK149999R0000		20	10.00
		Universal wire markers holder		Grey	UMH	1SNK900611R0000		10	0.20

Complete list of accessories is indicated in the terminal block datasheet including end stops.
Some accessories such as jumper bars may modify the terminal block's ratings: Complete information available in the accessories section of the catalog.

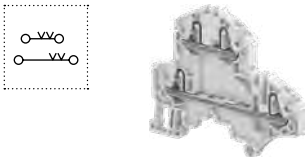

Feed-through PI-Spring terminal blocks

Description	Color	Type	Part Number		Pkg qty	Weight (1 pce) g
Feed-through	Grey	ZK2.5-D2	1SNK705210R0000		50	11.20

1SNK162034S0201

Technical data valid for copper conductors only.

ZK2.5-D1-PE PI-Spring terminal blocks

Double deck with 1 ground circuit - 5.2 mm 0.205 in spacing

2.5 mm²
12 AWG

1SNK162080V0014

ZK2.5-D1-PE

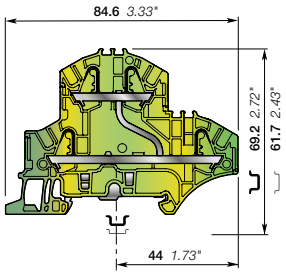

5.2 mm 0.205 in spacing

Description

Improve the safety of your installation in the event of a short-circuit thanks to our screwless rail contact:
- Rail contact non operator dependent,
- Performances above the requirements of the IEC 60947-7-2 terminal block standard,
- Secured snap on or off the rail,
- Profile aligned with ZK2.5-D2.

Ordering details

Description		Color	Type	Part Number		Pkg qty	Weight (1 pce) g
Ground	1 ground circuit	Green-yellow	ZK2.5-D1-PE	1SNK705250R0000		20	15.70

Main technical data

Connecting capacity		IEC	UL - CSA
1 conductor per clamp	Rigid: Solid/Stranded	0.2 ... 4 mm²	26 ... 12 AWG
	Flexible without ferrule	0.22 ... 2.5 mm²	
	Flexible with non insulated ferrule	0.22 ... 2.5 mm²	26 ... 14 AWG
	Flexible with insulated ferrule	0.22 ... 2.5 mm²	26 ... 14 AWG
Rated cross section		2.5 mm²	12 AWG
Rated short-time withstand current (1s)		300 A	396 A
Protection		IP20	NEMA 1
Explosive atmosphere classification		IM2 II 2 GD Ex eb I/IIC/IIIC – Class I, Zone 1, AEx e II, Ex e II U	

Mounting instructions

Rail		TH 35-7.5, TH 35-15
Wire stripping length		11 mm 0.433 in
Tool (for flexible conductor without ferrule)		Flat screwdriver Ø 3.5 mm Ø 0.138 in

The connecting capacity data for one Rigid: Solid/Stranded, or one Flexible conductor (when applicable) is a mandatory information required by IEC, UL and CSA standards (Copper conductors). All other data are provided as supplementary information only. For more details, please consult our CB, UL or CSA certificates and technical datasheet available on http://www.TE.com

CE, CB, RoHS, USR CNR, CSA, EAC Ex, ATEX, IECEx, Haz Loc, BV, DNV

Accessories

	Description			Color	Type	Part Number		Pkg qty	Weight (1 pce) g
1	**End stops**	10 mm	0.394 in	Dark grey	BAZH1	1SNK900102R0000		20	24.00
2	**End sections**	2 mm	0.079 in	Dark grey	EK2.5-D2	1SNK705960R0000		20	3.40
3	**Test adapters**	For test plugs DIA 2 mm 0.079 in		Dark grey	TP2	1SNK900203R0000		20	1.70
		For test plugs DIA 4 mm 0.157 in			TP4	1SNK900205R0000		20	2.40
4	**Test connectors**	5.2 mm 0.205 in spacing		Dark grey	TC5	1SNK900200R0000		10	5.20
		End module, 5.2 mm 0.205 in			TC5-R1	1SNK900201R0000		10	5.20
5	**Shield connectors**				SHB	1SNK900602R0000		20	4.90
6	**Label holders**			Dark grey	LH-J	1SNK900606R0000		100	0.73
7	**Terminal block markers**	Blank marker		White	MG-CPM 13 41790	1SNB041790R0512		1960	0.23
		Blank card			MC512	1SNK140000R0000		22	9.00
					MC512PA	1SNK149999R0000		20	10.00
		Universal wire markers holder		Grey	UMH	1SNK900611R0000		10	0.20

Complete list of accessories is indicated in the terminal block datasheet including end stops.
Some accessories such as jumper bars may modify the terminal block's ratings: Complete information available in the accessories section of the catalog.

1SNK162049S0201

Technical data valid for copper conductors only.

ZK2.5-T3 PI-Spring terminal blocks

Triple deck with 3 feed-through circuits - 5.2 mm 0.205 in spacing

2.5 mm²
12 AWG

ZK2.5-T3

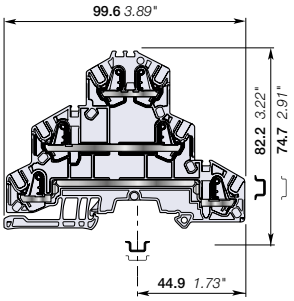

5.2 mm 0.205 in spacing

Description

Combine high performance with compact dimensions in just 5.2 mm 0.205 in spacing:
- 500 V IEC 300 V UL,
- 1 jumper channel and a large input and output marker zone on each deck.

Ordering details

Description		Color	Type	Part Number		Pkg qty	Weight (1 pce) g
Feed-through	3 feed-through circuits	Grey	ZK2.5-T3	1SNK705510R0000		25	17.33

Main technical data

Connecting capacity		IEC	UL - CSA
1 conductor per clamp	Rigid: Solid/Stranded	0.2 ... 4 mm²	26 ... 12 AWG
	Flexible without ferrule	0.22 ... 2.5 mm²	
	Flexible with non insulated ferrule	0.22 ... 2.5 mm²	26 ... 14 AWG
	Flexible with insulated ferrule	0.22 ... 2.5 mm²	26 ... 14 AWG
2 conductors per clamp	Flexible with twin ferrule	0.22 ... 0.5 mm²	26 ... 20 AWG
Rated current / Rated cross section		22 A / 2.5 mm²	20 A / 12 AWG
Rated short-time withstand current (1s)		300 A	
Short Circuit Current Rating (with specific conditions)			
Rated voltage		500 V	300 V
Impulse withstand voltage		8000 V	
Protection		IP20	NEMA 1
Increased safety Ex e		440 V 20 A IEC/EN 60079-7 - IM2 II 2 GD Ex eb I/IIC/IIIC	

Mounting instructions

Rail		TH 35-7.5, TH 35-15
Wire stripping length		11 mm 0.433 in
Tool (for flexible conductor without ferrule)		Flat screwdriver Ø 3.5 mm Ø 0.138 in

The connecting capacity data for one Rigid: Solid/Stranded, or one Flexible conductor (when applicable) is a mandatory information required by IEC, UL and CSA standards (Copper conductors). All other data are provided as supplementary information only. For more details, please consult our CB, UL or CSA certificates and technical datasheet available on http://www.TE.com

CE, CB, RoHS, USR CNR, CSA, EAC, ATEX, IECEx, BV

Accessories

	Description			Color	Type	Part Number		Pkg qty	Weight (1 pce) g
1	**End stops**	10 mm	0.394 in	Dark grey	BAZH1	1SNK900102R0000		20	24.00
2	**End sections**	0.8 mm	0.031 in	Dark grey	EK2.5-T3	1SNK705961R0000		20	4.76
3	**Jumper bars**	2 poles	32 A (IEC)	Orange	JB5-2	1SNK905302R0000		50	1.30
		3 poles	32 A (IEC)		JB5-3	1SNK905303R0000		50	2.00
		4 poles	32 A (IEC)		JB5-4	1SNK905304R0000		50	2.70
		5 poles	32 A (IEC)		JB5-5	1SNK905305R0000		50	3.50
		10 poles	32 A (IEC)		JB5-10	1SNK905310R0000		30	7.10
		50 poles	32 A (IEC)		JB5-50	1SNK905350R0000		10	36.00
4	**Test adapters**	For test plugs DIA 2 mm 0.079 in		Dark grey	TP2	1SNK900203R0000		20	1.70
		For test plugs DIA 4 mm 0.157 in			TP4	1SNK900205R0000		20	2.40
5	**Test connectors**	5.2 mm 0.205 in spacing		Dark grey	TC5	1SNK900200R0000		10	5.20
		End module, 5.2 mm 0.205 in			TC5-R1	1SNK900201R0000		10	5.20
6	**Label holders**			Dark grey	LH-J	1SNK900606R0000		100	0.73
7	**Terminal block markers**	Blank marker		White	MG-CPM 13 41790	1SNB041790R0512		1960	0.23
		Blank card			MC512	1SNK140000R0000		22	9.00
					MC512PA	1SNK149999R0000		20	10.00
		Universal wire markers holder		Grey	UMH	1SNK900611R0000		10	0.20

Complete list of accessories is indicated in the terminal block datasheet including end stops.
Some accessories such as jumper bars may modify the terminal block's ratings: Complete information available in the accessories section of the catalog.

Ground PI-Spring terminal blocks

Description	Color	Type	Part Number		Pkg qty	Weight (1 pce) g
Ground	Green-yellow	ZK2.5-T1-PE	1SNK705550R0000		25	21.53

1SNK162075S0201

Technical data valid for copper conductors only.

ZK2.5-T1 PI-Spring terminal blocks

Triple deck with 1 feed-through circuit - 5.2 mm 0.205 in spacing

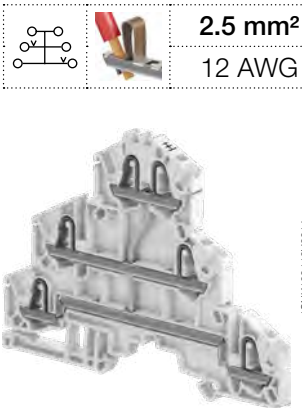

1SNK162110V0014

ZK2.5-T1

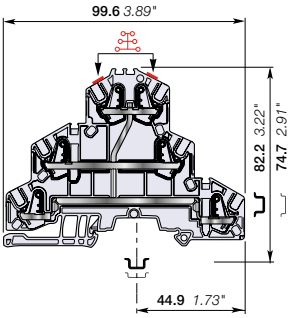

5.2 mm 0.205 in spacing

2.5 mm²
12 AWG

Description

Find the same functionalities as ZK2.5-T3 and ease one potential distribution on 6 independent connections.

Ordering details

Description		Color	Type	Part Number		Pkg qty	Weight (1 pce) g
Feed-through	1 feed-through circuit	Grey	ZK2.5-T1	1SNK705511R0000		25	17.33

Main technical data

Connecting capacity		IEC	UL - CSA
1 conductor per clamp	Rigid: Solid/Stranded	0.2 ... 4 mm²	26 ... 12 AWG
	Flexible without ferrule	0.22 ... 2.5 mm²	
	Flexible with non insulated ferrule	0.22 ... 2.5 mm²	26 ... 14 AWG
	Flexible with insulated ferrule	0.22 ... 2.5 mm²	26 ... 14 AWG
2 conductors per clamp	Flexible with twin ferrule	0.22 ... 0.5 mm²	26 ... 20 AWG
Rated current / Rated cross section		22 A / 2.5 mm²	20 A / 12 AWG
Rated short-time withstand current (1s)		300 A	
Short Circuit Current Rating (with specific conditions)			
Rated voltage		500 V	300 V
Impulse withstand voltage		8000 V	
Protection		IP20	NEMA 1
Increased safety Ex e		440 V 20 A IEC/EN 60079-7 - IM2 II 2 GD Ex eb I/IIC/IIIC	

The connecting capacity data for one Rigid: Solid/Stranded, or one Flexible conductor (when applicable) is a mandatory information required by IEC, UL and CSA standards (Copper conductors). All other data are provided as supplementary information only. For more details, please consult our CB, UL or CSA certificates and technical datasheet available on http://www.TE.com

CE, CB, RoHS, USR CNR, CSA, EAC, ATEX, IECEx, BV

Mounting instructions

Rail		TH 35-7.5, TH 35-15
Wire stripping length		11 mm 0.433 in
Tool (for flexible conductor without ferrule)		Flat screwdriver Ø 3.5 mm Ø 0.138 in

Accessories

	Description			Color	Type	Part Number		Pkg qty	Weight (1 pce) g
1	**End stops**	10 mm	0.394 in	Dark grey	BAZH1	1SNK900102R0000		20	24.00
2	**End sections**	0.8 mm	0.031 in	Dark grey	EK2.5-T3	1SNK705961R0000		20	4.76
3	**Jumper bars**	2 poles	32 A (IEC)	Orange	JB5-2	1SNK905302R0000		50	1.30
		3 poles	32 A (IEC)		JB5-3	1SNK905303R0000		50	2.00
		4 poles	32 A (IEC)		JB5-4	1SNK905304R0000		50	2.70
		5 poles	32 A (IEC)		JB5-5	1SNK905305R0000		50	3.50
		10 poles	32 A (IEC)		JB5-10	1SNK905310R0000		30	7.10
		50 poles	32 A (IEC)		JB5-50	1SNK905350R0000		10	36.00
4	**Test adapters**	For test plugs DIA 2 mm 0.079 in		Dark grey	TP2	1SNK900203R0000		20	1.70
		For test plugs DIA 4 mm 0.157 in			TP4	1SNK900205R0000		20	2.40
5	**Test connectors**	5.2 mm 0.205 in spacing		Dark grey	TC5	1SNK900200R0000		10	5.20
		End module, 5.2 mm 0.205 in			TC5-R1	1SNK900201R0000		10	5.20
6	**Label holders**			Dark grey	LH-J	1SNK900606R0000		100	0.73
7	**Terminal block markers**	Blank marker		White	MG-CPM 13 41790	1SNB041790R0512		1960	0.23
		Blank card			MC512	1SNK140000R0000		22	9.00
					MC512PA	1SNK149999R0000		20	10.00
		Universal wire markers holder		Grey	UMH	1SNK900611R0000		10	0.20

Complete list of accessories is indicated in the terminal block datasheet including end stops.
Some accessories such as jumper bars may modify the terminal block's ratings: Complete information available in the accessories section of the catalog.

Ground PI-Spring terminal blocks

Description	Color	Type	Part Number		Pkg qty	Weight (1 pce) g
Ground	Green-yellow	ZK2.5-T1-PE	1SNK705550R0000		25	21.53

1SNK162076S0201

Technical data valid for copper conductors only.

ZK2.5-L-L-PE PI-Spring terminal blocks

Triple deck with 2 feed-through circuits and 1 ground circuit - 5.2 mm 0.205 in spacing

2.5 mm²
12 AWG

1SNK162112V0014

ZK2.5-L-L-PE

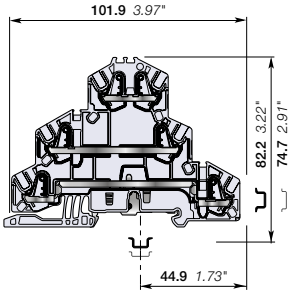

5.2 mm 0.205 in spacing

Description

Combine high performance with compact dimensions:

- 500V IEC 300 V UL,
- 2 feed through circuits and 1 ground circuit in just 5.2 mm 0.205 in spacing,
- 1 jumper channel and a large input and output marker zone on each deck,
- designed for easy wiring.

Ordering details

Description		Color	Type	Part Number		Pkg qty	Weight (1 pce) g
Feed-through + ground	2 feed-through circuits and 1 ground circuit	Grey, Green-yellow	ZK2.5-L-L-PE	1SNK705512R0000		25	21.38

Main technical data

Connecting capacity		IEC	UL - CSA
1 conductor per clamp	Rigid: Solid/Stranded	0.2 ... 4 mm²	26 ... 12 AWG
	Flexible without ferrule	0.22 ... 2.5 mm²	
	Flexible with non insulated ferrule	0.22 ... 2.5 mm²	26 ... 14 AWG
	Flexible with insulated ferrule	0.22 ... 2.5 mm²	26 ... 14 AWG
2 conductors per clamp	Flexible with twin ferrule	0.22 ... 0.5 mm²	26 ... 20 AWG
Rated current / Rated cross section		22 A / 2.5 mm²	20 A / 12 AWG
Rated short-time withstand current (1s)		300 A	396 A
Short Circuit Current Rating (with specific conditions)			
Rated voltage		500 V	300 V
Impulse withstand voltage		8000 V	
Protection		IP20	NEMA 1
Increased safety Ex e		440 V 20 A IEC/EN 60079-7 - IM2 II 2 GD Ex eb I/IIC/IIIC	

The connecting capacity data for one Rigid: Solid/Stranded, or one Flexible conductor (when applicable) is a mandatory information required by IEC, UL and CSA standards (Copper conductors). All other data are provided as supplementary information only. For more details, please consult our CB, UL or CSA certificates and technical datasheet available on http://www.TE.com

Mounting instructions

Rail		TH 35-7.5, TH 35-15
Wire stripping length		11 mm 0.433 in
Tool (for flexible conductor without ferrule)		Flat screwdriver Ø 3.5 mm Ø 0.138 in

CE | CB | RoHS | USR CNR | CSA | EAC | ATEX | IECEx | BV

Accessories

	Description			Color	Type	Part Number		Pkg qty	Weight (1 pce) g
1	**End stops**	10 mm	0.394 in	Dark grey	BAZH1	1SNK900102R0000		20	24.00
2	**End sections**	0.8 mm	0.031 in	Dark grey	EK2.5-T3	1SNK705961R0000		20	4.76
3	**Jumper bars**	2 poles	32 A (IEC)	Orange	JB5-2	1SNK905302R0000		50	1.30
		3 poles	32 A (IEC)		JB5-3	1SNK905303R0000		50	2.00
		4 poles	32 A (IEC)		JB5-4	1SNK905304R0000		50	2.70
		5 poles	32 A (IEC)		JB5-5	1SNK905305R0000		50	3.50
		10 poles	32 A (IEC)		JB5-10	1SNK905310R0000		30	7.10
		50 poles	32 A (IEC)		JB5-50	1SNK905350R0000		10	36.00
4	**Test adapters**	For test plugs DIA 2 mm 0.079 in		Dark grey	TP2	1SNK900203R0000		20	1.70
		For test plugs DIA 4 mm 0.157 in			TP4	1SNK900205R0000		20	2.40
5	**Test connectors**	5.2 mm 0.205 in spacing		Dark grey	TC5	1SNK900200R0000		10	5.20
		End module, 5.2 mm 0.205 in			TC5-R1	1SNK900201R0000		10	5.20
6	**Label holders**			Dark grey	LH-J	1SNK900606R0000		100	0.73
7	**Terminal block markers**	Blank marker		White	MG-CPM 13 41790	1SNB041790R0512		1960	0.23
		Blank card			MC512	1SNK140000R0000		22	9.00
					MC512PA	1SNK149999R0000		20	10.00
		Universal wire markers holder		Grey	UMH	1SNK900611R0000		10	0.20

Complete list of accessories is indicated in the terminal block datasheet including end stops.
Some accessories such as jumper bars may modify the terminal block's ratings: Complete information available in the accessories section of the catalog.

Feed-through PI-Spring terminal blocks

Description	Color	Type	Part Number		Pkg qty	Weight (1 pce) g
Feed-through	Grey	ZK2.5-T3	1SNK705510R0000		25	17.33

1SNK162078S0201

Technical data valid for copper conductors only.

ZK2.5-L-N-PE PI-Spring terminal blocks

Triple deck with 2 feed-through circuits and 1 ground circuit - 5.2 mm 0.205 in spacing

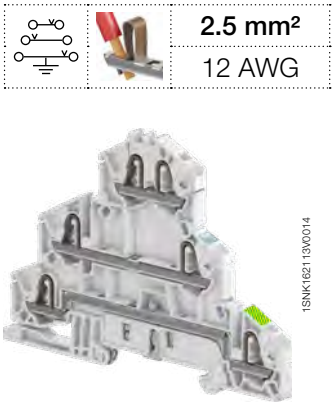

2.5 mm²
12 AWG

1SNK162113V0014

ZK2.5-L-N-PE

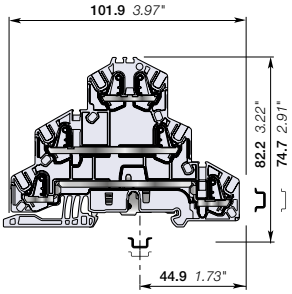

5.2 mm 0.205 in spacing

Description

Combine high performance with compact dimensions:

- 500 V IEC 300 V UL,
- 2 feed through circuits, phase and neutral, and 1 ground circuit in just 5.2 mm 0.205 in spacing,
- 1 jumper channel and a large input and output marker zone on each deck,
- designed for easy wiring.

Ordering details

Description		Color	Type	Part Number		Pkg qty	Weight (1 pce) g
Feed-through + ground	2 feed-through circuits and 1 ground circuit	Blue, grey, Green-yellow	ZK2.5-L-N-PE	1SNK705513R0000		25	21.38

Main technical data

Connecting capacity		IEC	UL - CSA
1 conductor per clamp	Rigid: Solid/Stranded	0.2 ... 4 mm²	26 ... 12 AWG
	Flexible without ferrule	0.22 ... 2.5 mm²	
	Flexible with non insulated ferrule	0.22 ... 2.5 mm²	26 ... 14 AWG
	Flexible with insulated ferrule	0.22 ... 2.5 mm²	26 ... 14 AWG
2 conductors per clamp	Flexible with twin ferrule	0.22 ... 0.5 mm²	26 ... 20 AWG
Rated current / Rated cross section		22 A / 2.5 mm²	20 A / 12 AWG
Rated short-time withstand current (1s)		300 A	396 A
Short Circuit Current Rating (with specific conditions)			
Rated voltage		500 V	300 V
Impulse withstand voltage		8000 V	
Protection		IP20	NEMA 1
Increased safety Ex e		440 V 20 A IEC/EN 60079-7 - IM2 II 2 GD Ex eb I/IIC/IIIC	

The connecting capacity data for one Rigid: Solid/Stranded, or one Flexible conductor (when applicable) is a mandatory information required by IEC, UL and CSA standards (Copper conductors). All other data are provided as supplementary information only. For more details, please consult our CB, UL or CSA certificates and technical datasheet available on http://www.TE.com

CE, CB, RoHS, USR CNR, CSA, EAC, ATEX, IECEx, BV

Mounting instructions

Rail		TH 35-7.5, TH 35-15
Wire stripping length		11 mm 0.433 in
Tool (for flexible conductor without ferrule)		Flat screwdriver Ø 3.5 mm Ø 0.138 in

Accessories

	Description			Color	Type	Part Number		Pkg qty	Weight (1 pce) g
1	**End stops**	10 mm	0.394 in	Dark grey	BAZH1	1SNK900102R0000		20	24.00
2	**End sections**	0.8 mm	0.031 in	Dark grey	EK2.5-T3	1SNK705961R0000		20	4.76
3	**Jumper bars**	2 poles	32 A (IEC)	Orange	JB5-2	1SNK905302R0000		50	1.30
		3 poles	32 A (IEC)		JB5-3	1SNK905303R0000		50	2.00
		4 poles	32 A (IEC)		JB5-4	1SNK905304R0000		50	2.70
		5 poles	32 A (IEC)		JB5-5	1SNK905305R0000		50	3.50
		10 poles	32 A (IEC)		JB5-10	1SNK905310R0000		30	7.10
		50 poles	32 A (IEC)		JB5-50	1SNK905350R0000		10	36.00
4	**Test adapters**	For test plugs DIA 2 mm 0.079 in		Dark grey	TP2	1SNK900203R0000		20	1.70
		For test plugs DIA 4 mm 0.157 in			TP4	1SNK900205R0000		20	2.40
5	**Test connectors**	5.2 mm 0.205 in spacing		Dark grey	TC5	1SNK900200R0000		10	5.20
		End module, 5.2 mm 0.205 in			TC5-R1	1SNK900201R0000		10	5.20
6	**Label holders**			Dark grey	LH-J	1SNK900606R0000		100	0.73
7	**Terminal block markers**	Blank marker		White	MG-CPM 13 41790	1SNB041790R0512		1960	0.23
		Blank card			MC512	1SNK140000R0000		22	9.00
					MC512PA	1SNK149999R0000		20	10.00
		Universal wire markers holder		Grey	UMH	1SNK900611R0000		10	0.20

Complete list of accessories is indicated in the terminal block datasheet including end stops.
Some accessories such as jumper bars may modify the terminal block's ratings: Complete information available in the accessories section of the catalog.

Feed-through PI-Spring terminal blocks

Description	Color	Type	Part Number		Pkg qty	Weight (1 pce) g
Feed-through	Grey	ZK2.5-T3	1SNK705510R0000		25	17.33

1SNK162079S0201

Technical data valid for copper conductors only.

ZK2.5-T1-PE PI-Spring terminal blocks

Triple deck with 1 ground circuit - 5.2 mm 0.205 in spacing

2.5 mm²
12 AWG

1SNK162111V0014

ZK2.5-T1-PE

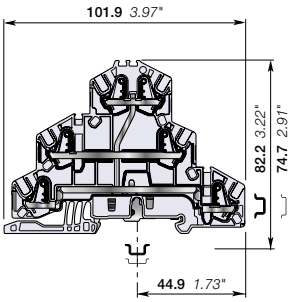

5.2 mm 0.205 in spacing

Description

Improve the safety of your installation in the event of a short-circuit thanks to our screwless rail contact:

- Rail contact non operator dependent,
- Performances above the requirements of the IEC 60947-7-2 terminal block standard,
- Secured snap on or off the rail,
- Profile aligned with ZK2.5-T3,
- 1 jumper channel on bottom and middle decks.

Ordering details

Description		Color	Type	Part Number		Pkg qty	Weight (1 pce) g
Ground	1 ground circuit	Green-yellow	ZK2.5-T1-PE	1SNK705550R0000		25	21.53

Main technical data

Connecting capacity		IEC	UL - CSA
1 conductor per clamp	Rigid: Solid/Stranded	0.2 ... 4 mm²	26 ... 12 AWG
	Flexible without ferrule	0.22 ... 2.5 mm²	
	Flexible with non insulated ferrule	0.22 ... 2.5 mm²	26 ... 14 AWG
	Flexible with insulated ferrule	0.22 ... 2.5 mm²	26 ... 14 AWG
Rated cross section		2.5 mm²	12 AWG
Rated short-time withstand current (1s)		300 A	396 A
Protection		IP20	NEMA 1
Explosive atmosphere classification		IM2 II 2 GD Ex eb I/IIC/IIIC	

Mounting instructions

Rail		TH 35-7.5, TH 35-15
Wire stripping length		11 mm 0.433 in
Tool (for flexible conductor without ferrule)		Flat screwdriver Ø 3.5 mm Ø 0.138 in

The connecting capacity data for one Rigid: Solid/Stranded, or one Flexible conductor (when applicable) is a mandatory information required by IEC, UL and CSA standards (Copper conductors). All other data are provided as supplementary information only. For more details, please consult our CB, UL or CSA certificates and technical datasheet available on http://www.TE.com

CE, CB, RoHS, USR CNR, CSA, EAC, ATEX, IECEx, BV

Accessories

	Description			Color	Type	Part Number		Pkg qty	Weight (1 pce) g
1	**End stops**	10 mm	0.394 in	Dark grey	BAZH1	1SNK900102R0000		20	24.00
2	**End sections**	0.8 mm	0.031 in	Dark grey	EK2.5-T3	1SNK705961R0000		20	4.76
3	**Test adapters**	For test plugs DIA 2 mm 0.079 in		Dark grey	TP2	1SNK900203R0000		20	1.70
		For test plugs DIA 4 mm 0.157 in			TP4	1SNK900205R0000		20	2.40
4	**Test connectors**	5.2 mm 0.205 in spacing		Dark grey	TC5	1SNK900200R0000		10	5.20
		End module, 5.2 mm 0.205 in			TC5-R1	1SNK900201R0000		10	5.20
5	**Label holders**			Dark grey	LH-J	1SNK900606R0000		100	0.73
6	**Terminal block markers**	Blank marker		White	MG-CPM 13 41790	1SNB041790R0512		1960	0.23
		Blank card			MC512	1SNK140000R0000		22	9.00
					MC512PA	1SNK149999R0000		20	10.00
		Universal wire markers holder		Grey	UMH	1SNK900611R0000		10	0.20

Complete list of accessories is indicated in the terminal block datasheet including end stops.
Some accessories such as jumper bars may modify the terminal block's ratings: Complete information available in the accessories section of the catalog.

1SNK162077S0201

Technical data valid for copper conductors only.

ZK2.5-CH-4P-LR PI-Spring terminal blocks
Component holder - 5.2 mm 0.205 in spacing

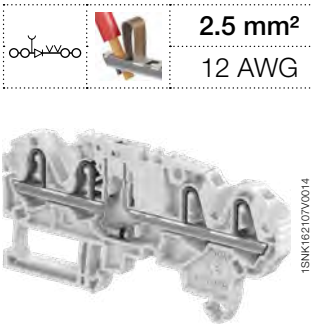

ZK2.5-CH-4P

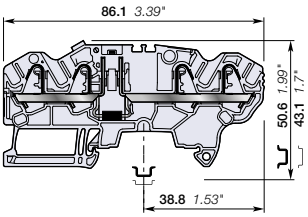

5.2 mm 0.205 in spacing

2.5 mm²
12 AWG

Description

- Protect your circuit with one 1N4007 diode,
- Clear identification of the diode orientation with marking identification on the top of the terminal block

Ordering details

Description		Color	Type	Part Number		Pkg qty	Weight (1 pce) g
Component holder	with 1 test socket DIA 2 mm 0.079 in	Grey	ZK2.5-CH-4P-LR	1SNK705710R0000		50	10.91

Main technical data

Connecting capacity		IEC	UL - CSA
1 conductor per clamp	Rigid: Solid/Stranded	0.2 ... 4 mm²	26 ... 12 AWG
	Flexible without ferrule	0.22 ... 2.5 mm²	
	Flexible with non insulated ferrule	0.22 ... 2.5 mm²	26 ... 14 AWG
	Flexible with insulated ferrule	0.22 ... 2.5 mm²	26 ... 14 AWG
2 conductors per clamp	Flexible with twin ferrule	0.22 ... 0.5 mm²	26 ... 20 AWG
Rated current / Rated cross section		1 A / 2.5 mm²	1 A / 12 AWG
Rated short-time withstand current (1s)			
Short Circuit Current Rating (with specific conditions)			
Rated voltage		630 V	300 V
Impulse withstand voltage			
Protection		IP20	NEMA 1

Mounting instructions

Rail		TH 35-7.5, TH 35-15
Wire stripping length		11 mm 0.433 in
Tool (for flexible conductor without ferrule)		Flat screwdriver Ø 3.5 mm Ø 0.138 in

The connecting capacity data for one Rigid: Solid/Stranded, or one Flexible conductor (when applicable) is a mandatory information required by IEC, UL and CSA standards (Copper conductors). All other data are provided as supplementary information only. For more details, please consult our CB, UL or CSA certificates and technical datasheet available on http://www.TE.com

CE CB RoHS USR CNR CSA EAC BV

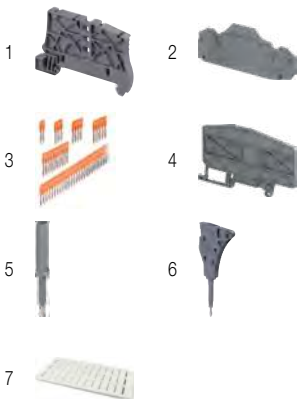

Accessories

	Description			Color	Type	Part Number		Pkg qty	Weight (1 pce) g
1	**End stops**	5.2 mm	0.205 in	Dark grey	BAZ1	1SNK900002R0000		50	5.30
2	**End sections**	2 mm	0.158 in	Dark grey	EK2.5-S-4P	1SNK705913R0000		20	2.94
3	**Jumper bars**	2 poles	32 A (IEC)	Orange	JB5-2	1SNK905302R0000		50	1.30
		3 poles	32 A (IEC)		JB5-3	1SNK905303R0000		50	2.00
		4 poles	32 A (IEC)		JB5-4	1SNK905304R0000		50	2.70
		5 poles	32 A (IEC)		JB5-5	1SNK905305R0000		50	3.50
		10 poles	32 A (IEC)		JB5-10	1SNK905310R0000		30	7.10
		50 poles	32 A (IEC)		JB5-50	1SNK905350R0000		10	36.00
4	**Circuit separators**	3 mm	0.118 in	Dark grey	CS-R3	1SNK900107R0000		20	6.40
5	**Test adapters**	For test plugs DIA 2 mm 0.079 in		Dark grey	TP2	1SNK900203R0000		20	1.70
		For test plugs DIA 4 mm 0.157 in			TP4	1SNK900205R0000		20	2.40
6	**Test connectors**	5.2 mm 0.205 in spacing		Dark grey	TC5	1SNK900200R0000		10	5.20
		End module, 5.2 mm 0.205 in			TC5-R1	1SNK900201R0000		10	5.20
7	**Terminal block markers**	Blank marker		White	MG-CPM 13 41790	1SNB041790R0512		1960	0.23
		Blank card			MC512	1SNK140000R0000		22	9.00
					MC512PA	1SNK149999R0000		20	10.00
		Universal wire markers holder		Grey	UMH	1SNK900611R0000		10	0.20

Complete list of accessories is indicated in the terminal block datasheet including end stops.
Some accessories such as jumper bars may modify the terminal block's ratings: Complete information available in the accessories section of the catalog.

1SNK162071S0201

Technical data valid for copper conductors only.

ZK2.5-CH-4P-RL PI-Spring terminal blocks
Component holder - 5.2 mm 0.205 in spacing

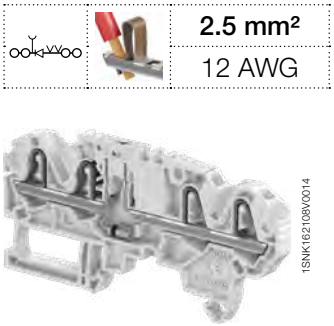

2.5 mm²	
12 AWG	

ZK2.5-CH-4P

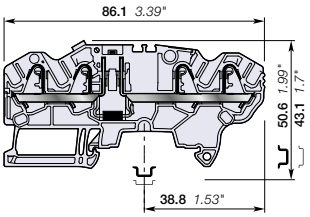

5.2 mm 0.205 in spacing

Description

- Protect your circuit with one 1N4007 diode,
- Clear identification of the diode orientation with marking identification on the top of the terminal block

Ordering details

Description		Color	Type	Part Number		Pkg qty	Weight (1 pce) g
Component holder	with 1 test socket DIA 2 mm 0.079 in	Grey	ZK2.5-CH-4P-RL	1SNK705711R0000		50	10.91

Main technical data

Connecting capacity		IEC	UL - CSA
1 conductor per clamp	Rigid: Solid/Stranded	0.2 ... 4 mm²	26 ... 12 AWG
	Flexible without ferrule	0.22 ... 2.5 mm²	
	Flexible with non insulated ferrule	0.22 ... 2.5 mm²	26 ... 14 AWG
	Flexible with insulated ferrule	0.22 ... 2.5 mm²	26 ... 14 AWG
2 conductors per clamp	Flexible with twin ferrule	0.22 ... 0.5 mm²	26 ... 20 AWG
Rated current / Rated cross section		1 A / 2.5 mm²	1 A / 12 AWG
Rated short-time withstand current (1s)			
Short Circuit Current Rating (with specific conditions)			
Rated voltage		630 V	300 V
Impulse withstand voltage			
Protection		IP20	NEMA 1

Mounting instructions

Rail		TH 35-7.5, TH 35-15
Wire stripping length		11 mm 0.433 in
Tool (for flexible conductor without ferrule)		Flat screwdriver Ø 3.5 mm Ø 0.138 in

The connecting capacity data for one Rigid: Solid/Stranded, or one Flexible conductor (when applicable) is a mandatory information required by IEC, UL and CSA standards (Copper conductors). All other data are provided as supplementary information only. For more details, please consult our CB, UL or CSA certificates and technical datasheet available on http://www.TE.com

CE CB RoHS USR CNR CSA EAC BV

Accessories

	Description			Color	Type	Part Number		Pkg qty	Weight (1 pce) g
1	**End stops**	5.2 mm	0.205 in	Dark grey	BAZ1	1SNK900002R0000		50	5.30
2	**End sections**	2 mm	0.158 in	Dark grey	EK2.5-S-4P	1SNK705913R0000		20	2.94
3	**Jumper bars**	2 poles	32 A (IEC)	Orange	JB5-2	1SNK905302R0000		50	1.30
		3 poles	32 A (IEC)		JB5-3	1SNK905303R0000		50	2.00
		4 poles	32 A (IEC)		JB5-4	1SNK905304R0000		50	2.70
		5 poles	32 A (IEC)		JB5-5	1SNK905305R0000		50	3.50
		10 poles	32 A (IEC)		JB5-10	1SNK905310R0000		30	7.10
		50 poles	32 A (IEC)		JB5-50	1SNK905350R0000		10	36.00
4	**Circuit separators**	3 mm	0.118 in	Dark grey	CS-R3	1SNK900107R0000		20	6.40
5	**Test adapters**	For test plugs DIA 2 mm 0.079 in		Dark grey	TP2	1SNK900203R0000		20	1.70
		For test plugs DIA 4 mm 0.157 in			TP4	1SNK900205R0000		20	2.40
6	**Test connectors**	5.2 mm 0.205 in spacing		Dark grey	TC5	1SNK900200R0000		10	5.20
		End module, 5.2 mm 0.205 in			TC5-R1	1SNK900201R0000		10	5.20
7	**Terminal block markers**	Blank marker		White	MG-CPM 13 41790	1SNB041790R0512		1960	0.23
		Blank card			MC512	1SNK140000R0000		22	9.00
					MC512PA	1SNK149999R0000		20	10.00
		Universal wire markers holder		Grey	UMH	1SNK900611R0000		10	0.20

Complete list of accessories is indicated in the terminal block datasheet including end stops.
Some accessories such as jumper bars may modify the terminal block's ratings: Complete information available in the accessories section of the catalog.

1SNK162072S0201

Technical data valid for copper conductors only.

ZK2.5-D-CH-UD PI-Spring terminal blocks
Component holder - 5.2 mm 0.205 in spacing

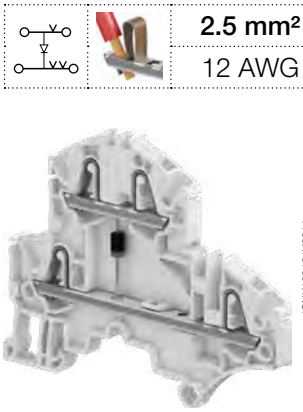

ZK2.5-D-CH

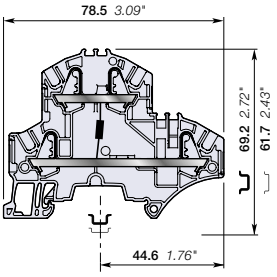

5.2 mm 0.205 in spacing

		2.5 mm²
		12 AWG

Description

Protect your circuit with one 1N4007 diode.

Ordering details

Description	Color	Type	Part Number		Pkg qty	Weight (1 pce) g
Component holder	Grey	ZK2.5-D-CH-UD	1SNK705213R0000		50	11.20

Main technical data

Connecting capacity		IEC	UL - CSA
1 conductor per clamp	Rigid: Solid/Stranded	0.2 ... 4 mm²	26 ... 12 AWG
	Flexible without ferrule	0.22 ... 2.5 mm²	
	Flexible with non insulated ferrule	0.22 ... 2.5 mm²	26 ... 14 AWG
	Flexible with insulated ferrule	0.22 ... 2.5 mm²	26 ... 14 AWG
2 conductors per clamp	Flexible with twin ferrule	0.22 ... 0.5 mm²	26 ... 20 AWG
Rated current / Rated cross section		24 A / 2.5 mm²	20 A / 12 AWG
Rated short-time withstand current (1s)		300 A	
Short Circuit Current Rating (with specific conditions)			
Rated voltage		800 V	600 V
Impulse withstand voltage			
Protection		IP20	NEMA 1

Mounting instructions

Rail		TH 35-7.5, TH 35-15
Wire stripping length		11 mm 0.443 in
Tool (for flexible conductor without ferrule)		Flat screwdriver Ø 3.5 mm Ø 0.138 in

The connecting capacity data for one Rigid: Solid/Stranded, or one Flexible conductor (when applicable) is a mandatory information required by IEC, UL and CSA standards (Copper conductors). All other data are provided as supplementary information only. For more details, please consult our CB, UL or CSA certificates and technical datasheet available on http://www.TE.com

CE RoHS USR CNR CSA EAC

Accessories

	Description			Color	Type	Part Number		Pkg qty	Weight (1 pce) g
1	End stops	10 mm	0.394 in	Dark grey	BAZH1	1SNK900102R0000		20	24.00
2	End sections	2 mm	0.079 in	Dark grey	EK2.5-D2	1SNK705960R0000		20	3.40
3	Jumper bars	2 poles	32 A (IEC)	Orange	JB5-2	1SNK905302R0000		50	1.30
		3 poles	32 A (IEC)		JB5-3	1SNK905303R0000		50	2.00
		4 poles	32 A (IEC)		JB5-4	1SNK905304R0000		50	2.70
		5 poles	32 A (IEC)		JB5-5	1SNK905305R0000		50	3.50
		10 poles	32 A (IEC)		JB5-10	1SNK905310R0000		30	7.10
		50 poles	32 A (IEC)		JB5-50	1SNK905350R0000		10	36.00
4	Test adapters	For test plugs DIA 2 mm 0.079 in		Dark grey	TP2	1SNK900203R0000		20	1.70
		For test plugs DIA 4 mm 0.157 in			TP4	1SNK900205R0000		20	2.40
5	Test connectors	5.2 mm 0.205 in spacing		Dark grey	TC5	1SNK900200R0000		10	5.20
		End module, 5.2 mm 0.205 in			TC5-R1	1SNK900201R0000		10	5.20
6	Shield connectors				SHB	1SNK900602R0000		20	4.90
7	Label holders			Dark grey	LH-J	1SNK900606R0000		100	0.73
8	Terminal block markers	Blank marker		White	MG-CPM 13 41790	1SNB041790R0512		1960	0.23
		Blank card			MC512	1SNK140000R0000		22	9.00
					MC512PA	1SNK149999R0000		20	10.00
		Universal wire markers holder		Grey	UMH	1SNK900611R0000		10	0.20

Complete list of accessories is indicated in the terminal block datasheet including end stops.
Some accessories such as jumper bars may modify the terminal block's ratings: Complete information available in the accessories section of the catalog.

1SNK162066S0201

Technical data valid for copper conductors only.

ZK2.5-D-CH-DU PI-Spring terminal blocks
Component holder - 5.2 mm 0.205 in spacing

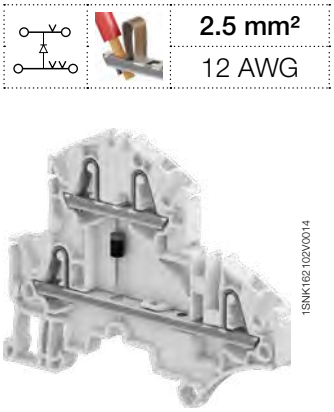

2.5 mm²
12 AWG

ZK2.5-D-CH

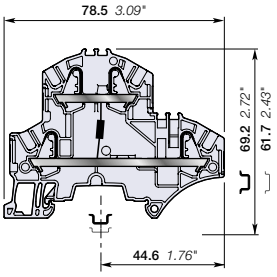

5.2 mm 0.205 in spacing

Description

Protect your circuit with one 1N4007 diode.

Ordering details

Description	Color	Type	Part Number		Pkg qty	Weight (1 pce) g
Component holder	Grey	ZK2.5-D-CH-DU	1SNK705214R0000		50	11.20

Main technical data

Connecting capacity		IEC	UL - CSA
1 conductor per clamp	Rigid: Solid/Stranded	0.2 ... 4 mm²	26 ... 12 AWG
	Flexible without ferrule	0.22 ... 2.5 mm²	
	Flexible with non insulated ferrule	0.22 ... 2.5 mm²	26 ... 14 AWG
	Flexible with insulated ferrule	0.22 ... 2.5 mm²	26 ... 14 AWG
2 conductors per clamp	Flexible with twin ferrule	0.22 ... 0.5 mm²	26 ... 20 AWG
Rated current / Rated cross section		24 A / 2.5 mm²	20 A / 12 AWG
Rated short-time withstand current (1s)		300 A	
Short Circuit Current Rating (with specific conditions)			
Rated voltage		800 V	600 V
Impulse withstand voltage			
Protection		IP20	NEMA 1

The connecting capacity data for one Rigid: Solid/Stranded, or one Flexible conductor (when applicable) is a mandatory information required by IEC, UL and CSA standards (Copper conductors). All other data are provided as supplementary information only. For more details, please consult our CB, UL or CSA certificates and technical datasheet available on http://www.TE.com

CE RoHS USR CNR CSA EAC

Mounting instructions

Rail	TH 35-7.5, TH 35-15
Wire stripping length	11 mm 0.443 in
Tool (for flexible conductor without ferrule)	Flat screwdriver Ø 3.5 mm Ø 0.138 in

Accessories

	Description			Color	Type	Part Number		Pkg qty	Weight (1 pce) g
1	End stops	10 mm	0.394 in	Dark grey	BAZH1	1SNK900102R0000		20	24.00
2	End sections	2 mm	0.079 in	Dark grey	EK2.5-D2	1SNK705960R0000		20	3.40
3	Jumper bars	2 poles	32 A (IEC)	Orange	JB5-2	1SNK905302R0000		50	1.30
		3 poles	32 A (IEC)		JB5-3	1SNK905303R0000		50	2.00
		4 poles	32 A (IEC)		JB5-4	1SNK905304R0000		50	2.70
		5 poles	32 A (IEC)		JB5-5	1SNK905305R0000		50	3.50
		10 poles	32 A (IEC)		JB5-10	1SNK905310R0000		30	7.10
		50 poles	32 A (IEC)		JB5-50	1SNK905350R0000		10	36.00
4	Test adapters	For test plugs DIA 2 mm 0.079 in		Dark grey	TP2	1SNK900203R0000		20	1.70
		For test plugs DIA 4 mm 0.157 in			TP4	1SNK900205R0000		20	2.40
5	Test connectors	5.2 mm 0.205 in spacing		Dark grey	TC5	1SNK900200R0000		10	5.20
		End module, 5.2 mm 0.205 in			TC5-R1	1SNK900201R0000		10	5.20
6	Shield connectors				SHB	1SNK900602R0000		20	4.90
7	Label holders			Dark grey	LH-J	1SNK900606R0000		100	0.73
8	Terminal block markers	Blank marker		White	MG-CPM 13 41790	1SNB041790R0512		1960	0.23
		Blank card			MC512	1SNK140000R0000		22	9.00
					MC512PA	1SNK149999R0000		20	10.00
		Universal wire markers holder		Grey	UMH	1SNK900611R0000		10	0.20

Complete list of accessories is indicated in the terminal block datasheet including end stops.
Some accessories such as jumper bars may modify the terminal block's ratings: Complete information available in the accessories section of the catalog.

1SNK162067S0201

Technical data valid for copper conductors only.

ZK2.5-D-CH2-DU-RL PI-Spring terminal blocks
Component holder - 5.2 mm 0.205 in spacing

2.5 mm²	
12 AWG	

1SNK162114V0014

ZK2.5-D-CH2

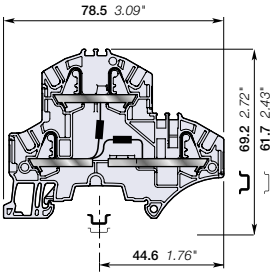

5.2 mm 0.205 in spacing

Description

- Protect your circuit with 1N4007 diodes;
- Convenient identification of the diodes orientation on the terminal block front side.

Ordering details

Description	Color	Type	Part Number		Pkg qty	Weight (1 pce) g
Component holder	Grey	ZK2.5-D-CH2-DU-RL	1SNK705219R0000		50	11.20

Main technical data

Connecting capacity		IEC	UL - CSA
1 conductor per clamp	Rigid: Solid/Stranded	0.2 ... 4 mm²	26 ... 12 AWG
	Flexible without ferrule	0.22 ... 2.5 mm²	
	Flexible with non insulated ferrule	0.22 ... 2.5 mm²	26 ... 14 AWG
	Flexible with insulated ferrule	0.22 ... 2.5 mm²	26 ... 14 AWG
2 conductors per clamp	Flexible with twin ferrule	0.22 ... 0.5 mm²	26 ... 20 AWG
Rated current / Rated cross section		1 A / 2.5 mm²	/ 12 AWG
Rated short-time withstand current (1s)			
Short Circuit Current Rating (with specific conditions)			
Rated voltage		800 V	600 V
Impulse withstand voltage			
Protection		IP20	NEMA 1

Mounting instructions

Rail		TH 35-7.5, TH 35-15
Wire stripping length		11 mm 0.443 in
Tool (for flexible conductor without ferrule)		Flat screwdriver Ø 3.5 mm Ø 0.138 in

The connecting capacity data for one Rigid: Solid/Stranded, or one Flexible conductor (when applicable) is a mandatory information required by IEC, UL and CSA standards (Copper conductors). All other data are provided as supplementary information only. For more details, please consult our CB, UL or CSA certificates and technical datasheet available on http://www.TE.com

CE RoHS EAC

Accessories

	Description			Color	Type	Part Number		Pkg qty	Weight (1 pce) g
1	End stops	10 mm	0.394 in	Dark grey	BAZH1	1SNK900102R0000		20	24.00
2	End sections	2 mm	0.079 in	Dark grey	EK2.5-D2	1SNK705960R0000		20	3.40
3	Jumper bars	2 poles	32 A (IEC)	Orange	JB5-2	1SNK905302R0000		50	1.30
		3 poles	32 A (IEC)		JB5-3	1SNK905303R0000		50	2.00
		4 poles	32 A (IEC)		JB5-4	1SNK905304R0000		50	2.70
		5 poles	32 A (IEC)		JB5-5	1SNK905305R0000		50	3.50
		10 poles	32 A (IEC)		JB5-10	1SNK905310R0000		30	7.10
		50 poles	32 A (IEC)		JB5-50	1SNK905350R0000		10	36.00
4	Test adapters	For test plugs DIA 2 mm 0.079 in		Dark grey	TP2	1SNK900203R0000		20	1.70
		For test plugs DIA 4 mm 0.157 in			TP4	1SNK900205R0000		20	2.40
5	Test connectors	5.2 mm 0.205 in spacing		Dark grey	TC5	1SNK900200R0000		10	5.20
		End module, 5.2 mm 0.205 in			TC5-R1	1SNK900201R0000		10	5.20
6	Shield connectors				SHB	1SNK900602R0000		20	4.90
7	Terminal block markers	Blank marker		White	MG-CPM 13 41790	1SNB041790R0512		1960	0.23
		Blank card			MC512	1SNK140000R0000		22	9.00
					MC512PA	1SNK149999R0000		20	10.00
		Universal wire markers holder		Grey	UMH	1SNK900611R0000		10	0.20

Complete list of accessories is indicated in the terminal block datasheet including end stops.
Some accessories such as jumper bars may modify the terminal block's ratings: Complete information available in the accessories section of the catalog.

1SNK162073S0201

Technical data valid for copper conductors only.

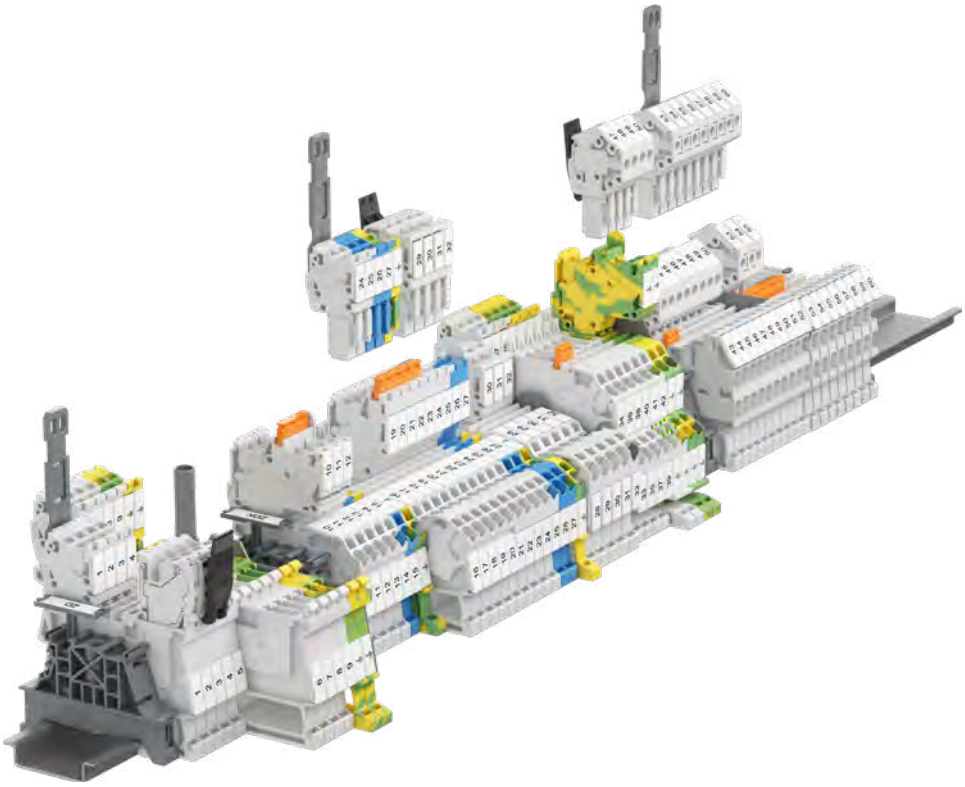

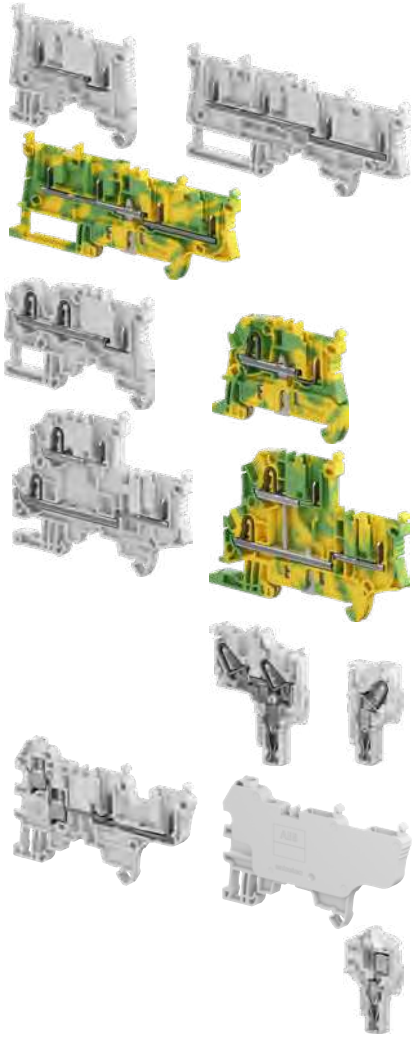

Technologies presentation			70
Overview			76

PI-Spring Pluggable

Pluggable Pluggable			
2.5 mm² / 12 AWG	Feed-through	**ZD2.5-11**	80
		ZD2.5-22	81
	Ground	**ZD2.5-22-PE**	82
PI-Spring Pluggable			
2.5 mm² / 12 AWG	Feed-through	**ZDK2.5-11**	83
		ZDK2.5-21	84
		ZDK2.5-22	85
4 mm² / 10 AWG	Feed-through	**ZDK4-22**	86
2.5 mm² / 12 AWG	Ground	**ZDK2.5-11-PE**	87
		ZDK2.5-22-PE	88
	Double deck	**ZDK2.5-D2**	89
		ZDK2.5-D1	90
		ZDK2.5-D2-PE	91
		ZDK2.5-D1-PE	92
PI-Spring female plugs		**CDK2.5**	93
		CDK2.5-J	94
		CDK2.5-2P-J	95
		CDK4	96

Screw clamp Pluggable

4 mm² / 10 AWG	Feed-through	**ZDS4-22**	98
		ZDS4-22-R1	100
Screw clamp female plugs		**CDS4**	99
		CDS4-R1	101

The SNK series pluggable terminal blocks combine the benefits of our smart connections with the flexibility of the pluggable function.

PI-Spring Pluggable

PI-Spring Pluggable

Pluggable Pluggable

Screw clamp Pluggable

Speed up your projects

Modularity brings assembly flexibility

Pluggable technology brings modularity into the electrical installation allowing the combination of sub-assemblies and prewired harnesses that facilitate and considerably accelerate assembly test and factory commissioning.

Better project identification

– Circuit identification is improved thanks to the 20% larger marking area
– Pre-mark by hand or with label on our flat marking surface and start immediately the wiring, before the final markers mounting
– Spare markers re-printing in case of modifications.

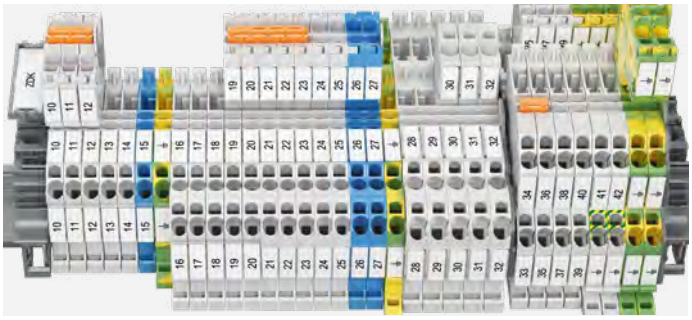

Clear circuit identification

1SNK164014S0201 - Rev. A

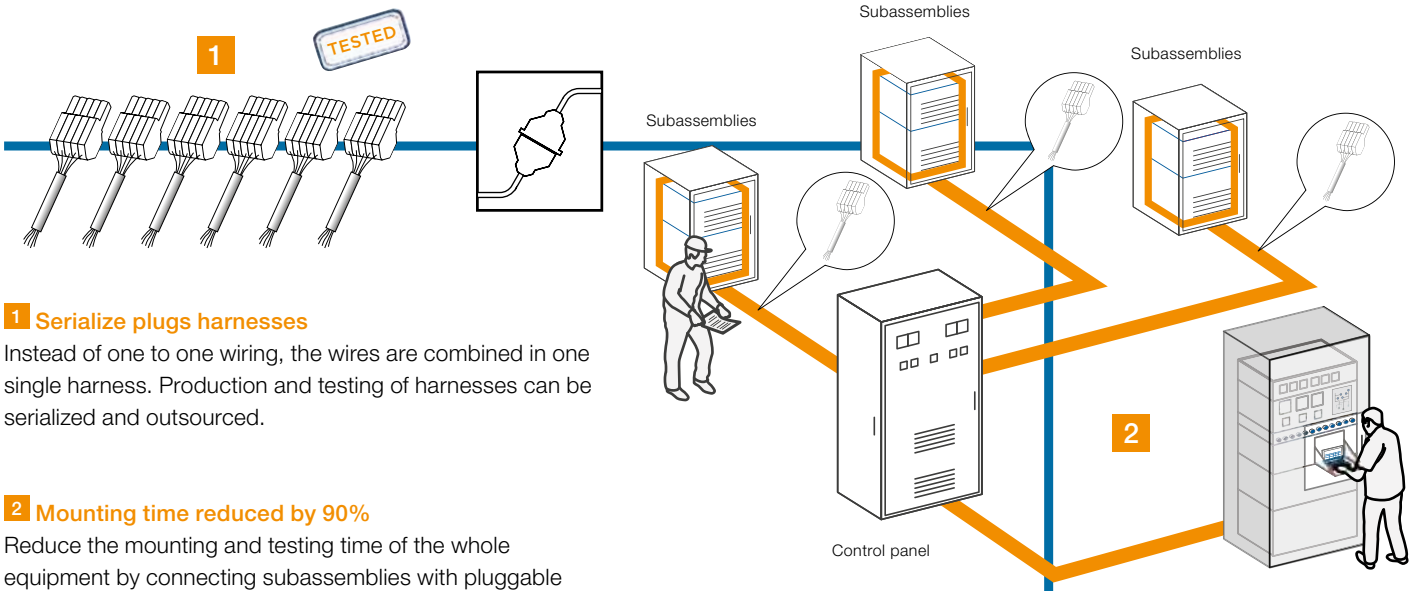

1 Serialize plugs harnesses
Instead of one to one wiring, the wires are combined in one single harness. Production and testing of harnesses can be serialized and outsourced.

2 Mounting time reduced by 90%
Reduce the mounting and testing time of the whole equipment by connecting subassemblies with pluggable terminal blocks and harnesses. Ease the factory commissioning.

3 Disconnect for transportation
Easily disconnect the harnesses if needed for convenient transportation of big equipment.

4 Quickly secure on-site reconnection
Secure oan-site installation: final reconnection is done in few quick steps and fully secured thanks to error-free coding system. Facilitate the final commissioning.

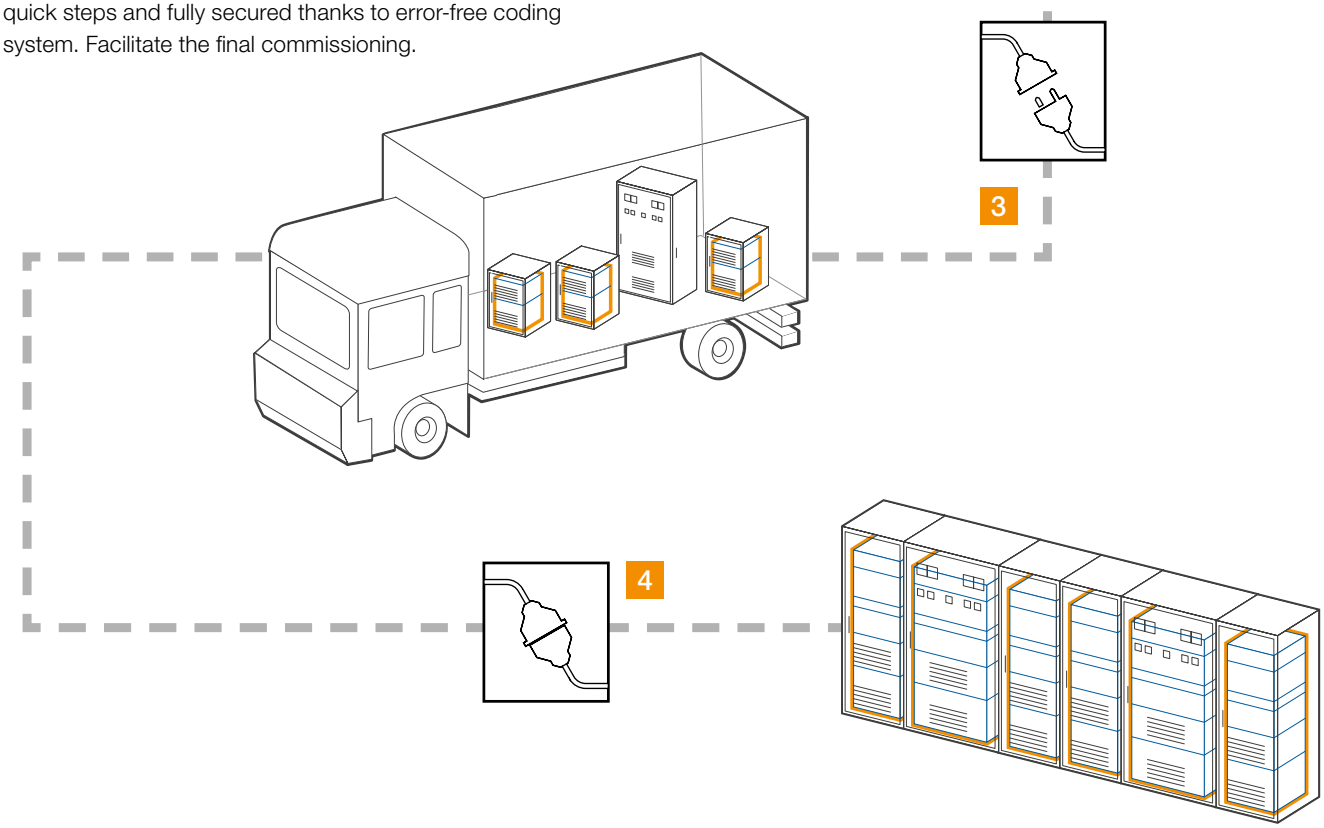

1SNK164014S0201 - Rev. A

Easy to install

Smart design facilitating assembly process

Mounting, wiring, testing… made easy.

Create your own assemblies without tooling:

– Easily snap together multiple plugs

– Eliminate stock of pre-configured plugs.

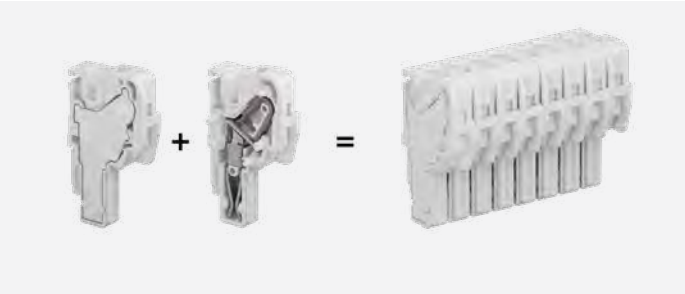

Only two plug variants are required to compose harnesses up to 15 poles

Some plugs feature a jumper channel and/or 2 connections that ease the signal distribution or wiring daisy chaining of subassemblies.

Easy signal distribution on plugs

Safety and protection

Eliminate connection errors with coding pegs:

– Simply insert the pegs to create a coding sequence.

Secure your wiring against accidental tearing:

– Automatic locking function

– Lock safely 2 to 8 plugs with only one locking device

– Cable clamp secures the wires onto the plug when pulling the plug assembly.

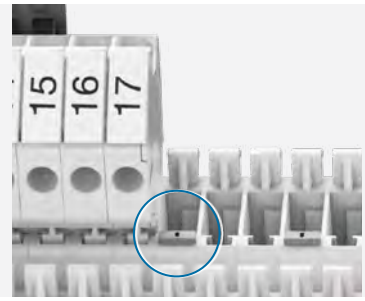

Convenient coding pegs

Cable clamp & locking device

1SNK164014S0201 - Rev. A

Faster accessories mounting

Save up to 70% mounting time thanks to:

– Screwless jumpers, component plugs, test devices, end stops and snap-in ground terminal blocks.

Closed jumper location allows great stiffness of the terminal block, avoid deflection while tightening and optimal jumper guiding.

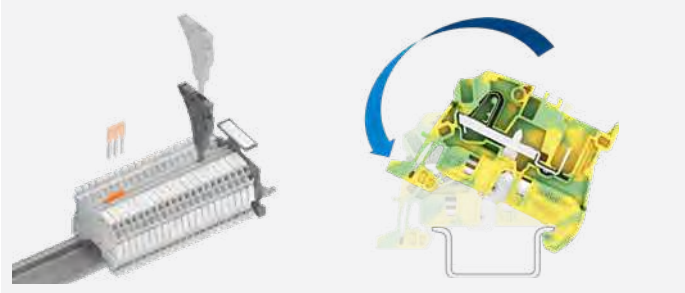

Screwless accessories **Snap-in ground terminal blocks**

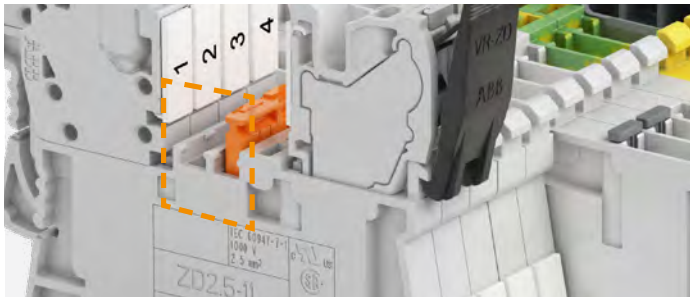

Closed jumper location for stiffness

Smart accessories

Flexible test solutions from individual insulated test adapter to test connectors for complete assemblies testing.

– Direct plug-in into jumpers channels

– 5, 6, 8 mm spacing, mixing various spacing is possible

– 1000 V rating.

Smart plug-in jumpers

Pre-cut poles removable by hand: clean cut.

Insulated up to 1000 V (avoid use of separators).

Predefined shapes in molding to easily identify connected poles with a pen.

Plug-in individual test adapter **Plug-in test connector**

Pre-cut poles easy removable by hand **Predefined shape to identify connected poles**

1SNK164014S0201 - Rev. A

Optimized logistics

Reduce your accessories inventory by up to 50%

SNK PI-Spring, screw and pluggable ranges share the same accessories.

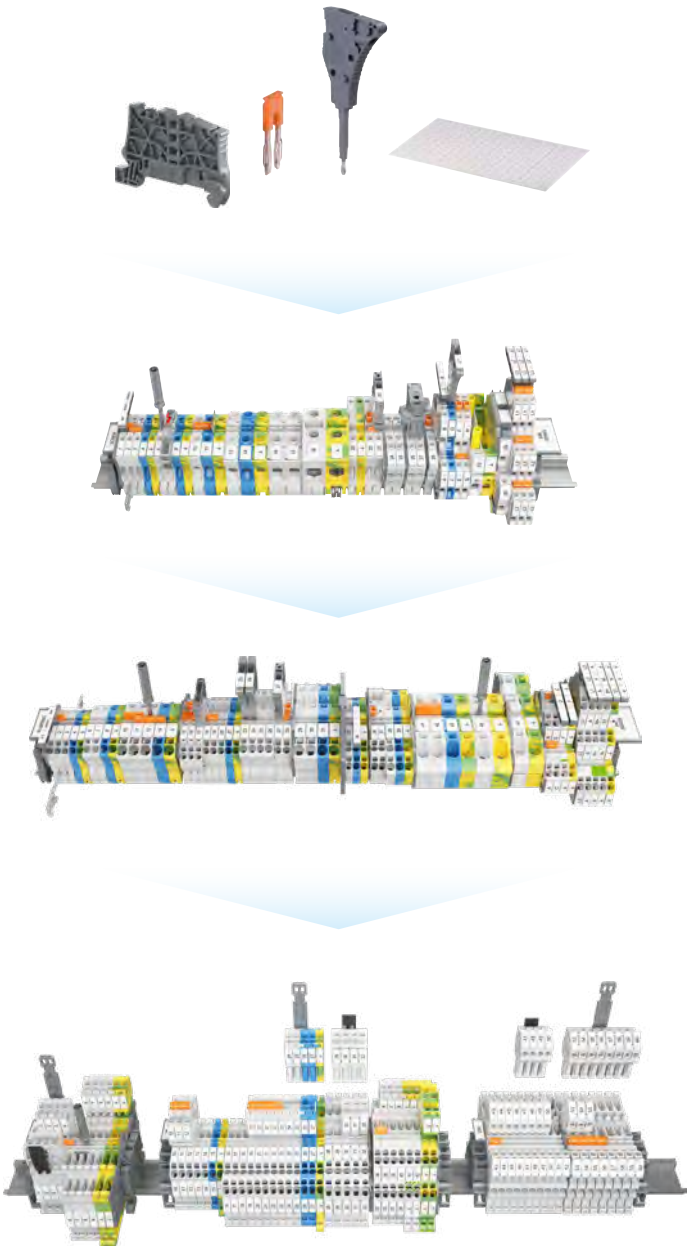

Shared accessories for SNK PI-Spring, screw and pluggable ranges

Facilitate maintenance operations

Terminal blocks can be individually removed from a terminal assembly equipped with markers: TE Connectivity markers become independent after strip mounting. The markers remain on terminal in any situation.
Markers are interchangable: the smaller marker can fit any bigger block.

Maintenance operations facilitated

Reliable in harsh conditions

Qualified for worldwide markets, applications and for severe environments: vibration, shock, corrosion…

CE IEC RoHS

SNK series, terminal blocks

Pluggable technology - Range overview from 2.5 to 4 mm² – 12 to 10 AWG

PI-Spring pluggable

Pluggable pluggable

2 Connections
Single deck
Feed-through

4 Connections
Single deck
Feed-through
Ground

PI-Spring pluggable

2 Connections
Single deck
Feed-through
Ground

3 Connections
Single deck
Feed-through

4 Connections
Single deck
Feed-through
Ground

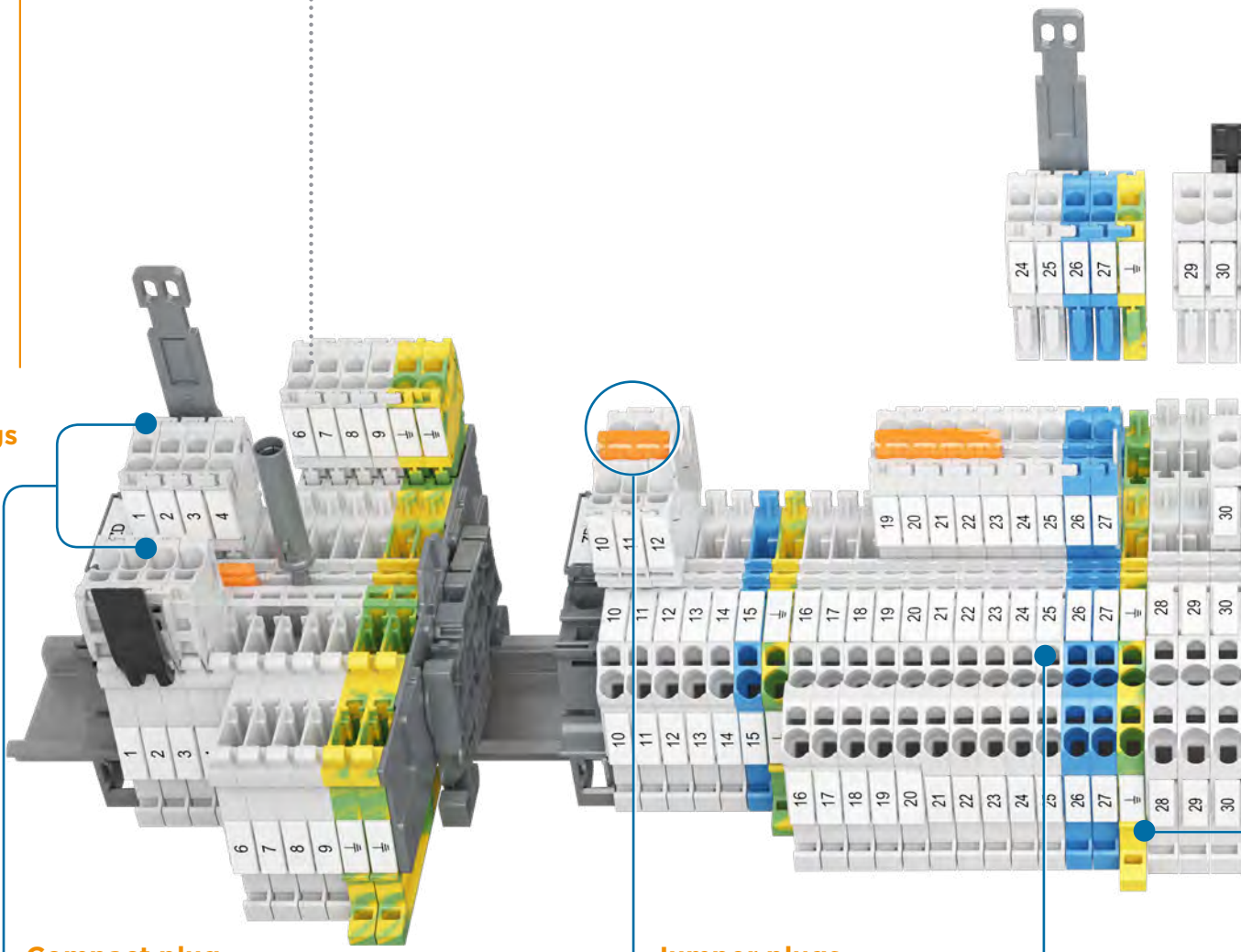

Plugs

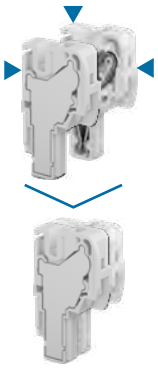

Compact plug
Save up to 15% in height

Reduced plug variants
Only two plugs variants to create assemblies

Jumper plugs
Plugs with 1 or 2 connection & jumper to ease potential distribution

Voltage test
Screwdriver entry point accepts category II probes

Screw clamp pluggable

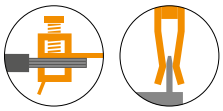

2x2
Connections
Double deck
Feed-through
Ground

4
Connections
Single deck
Feed-through

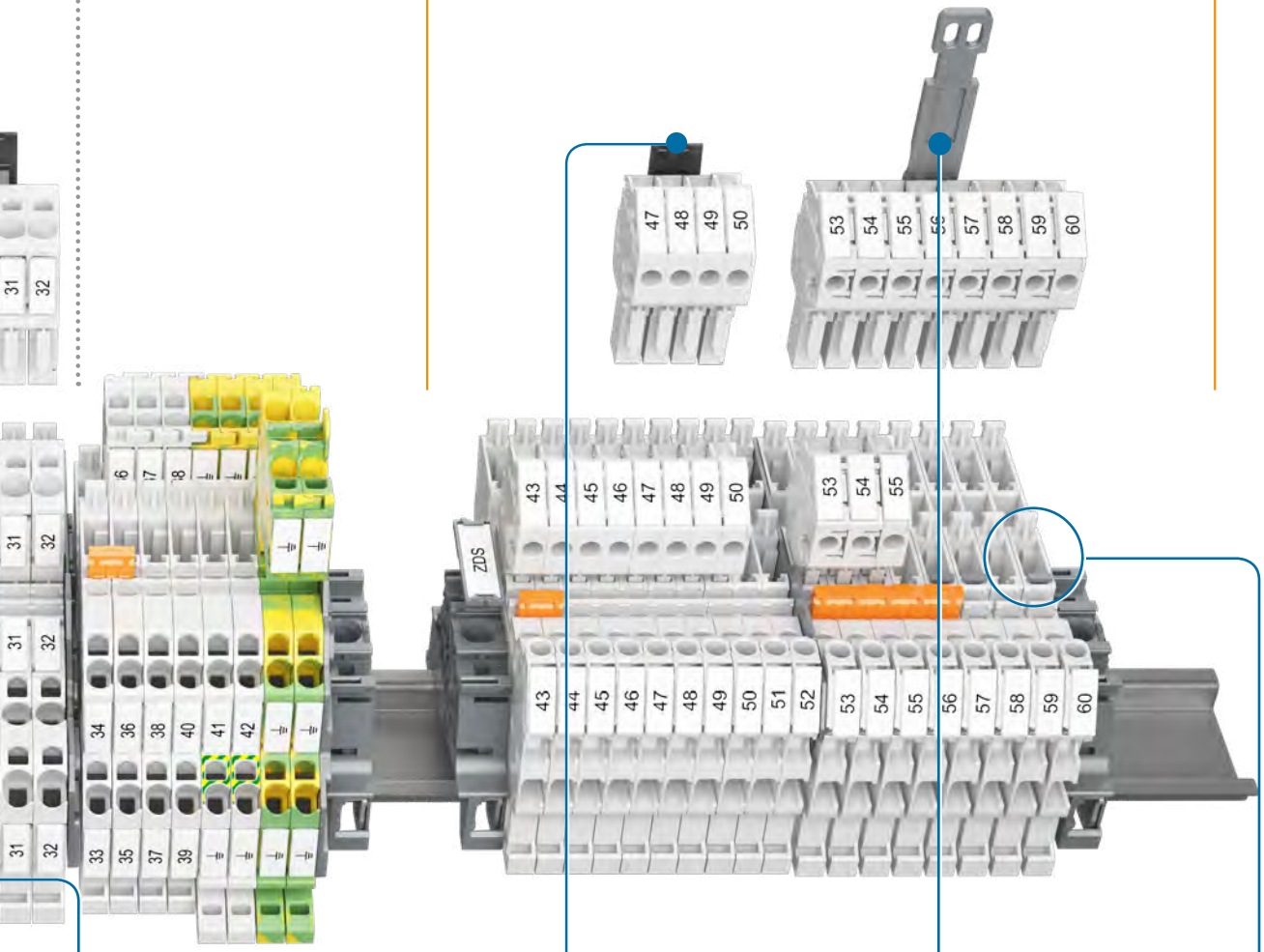

End section
No need of end section between 2.5 and 4 mm² terminal blocks

Cable clamp
Secure the wires ontov the plug when pulling the plug assembly

Locking device
Secure plug and wiring against accidental pulling

Convenient coding pegs
Guarantee error free plugs insertion

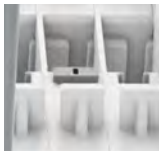

1SNK164013S0201

PI-Spring Pluggable

Single deck

Section		Feed-through		Ground	Feed-through			Ground	
2.5 mm²	12 AWG	ZD2.5-11	ZD2.5-22	ZD2.5-22-PE	ZDK2.5-11	ZDK2.5-21	ZDK2.5-22	ZDK2.5-11-PE	ZDK2.5-22-PE
4 mm²	10 AWG						ZDK4-22		

Double deck

Section		Feed-through		Feed-through + ground	Ground
2.5 mm²	12 AWG	ZDK2.5-D2	ZDK2.5-D1	ZDK2.5-D2-PE	ZDK2.5-D1-PE
4 mm²	10 AWG				

PI-Spring female plugs

Section		Closed		Closed		Closed		Closed		Closed		Closed	
2.5 mm²	12 AWG	CDK2.5	CDK2.5-E	CDK2.5-J	CDK2.5-J-E	CDK2.5-2P-J	CDK2.5-2P-J-E	CDK2.5-PE	CDK2.5-PE-E	CDK2.5-J-PE	CDK2.5-J-PE-E	CDK2.5-2P-J-PE	CDK2.5-2P-J-PE
4 mm²	10 AWG	CDK4	CDK4-E										

Screw clamp Pluggable

Single deck

Section		Feed-through
4 mm²	10 AWG	ZDS4-22 ZDS4-22-R1

Screw clamp female plugs

Section		Closed	
4 mm²	10 AWG	CDS4 CDS4-R1	CDS4-E

clamp - Channels for jumpering or testing - test socket - Blown-fuse indicator - male pluggable clamp - female pluggable clamp

1SNK164018S0201

PI-Spring Pluggable

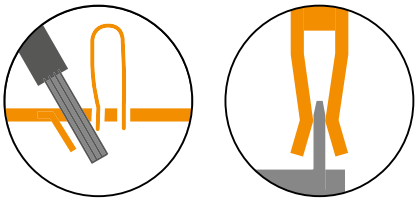

ZD2.5-11 PI-Spring pluggable terminal blocks

Feed-through - 5.2 mm 0.205 in spacing

2.5 mm²

12 AWG

ZD2.5-11

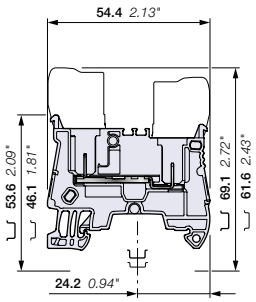

5.2 mm 0.205 in spacing

CDK2.5 CDK2.5-E

Description

- Increase your productivity with pluggable terminal blocks: possibility of pre-produced plugs harnesses, time saving plug and play assembly, reduced transportation panels preparation and final installation, easily connect sub-assemblies together,
- Simplify and secure your installation: in site faulty connection errors are eliminated, prior connection testing is eased and reliable, test connectors (TC5) withstanding 10 000 operations are compatible for convenient testing.

Ordering details

Description		Color	Type	Part Number		Pkg qty	Weight (1 pce) g
Feed-through	2 connections	Grey	ZD2.5-11	1SNK805016R0000		50	5.66

Main technical data

Connecting capacity		IEC	UL - CSA
1 conductor per clamp	Rigid: Solid/Stranded	0.2 ... 4 mm²	26 ... 12 AWG
	Flexible without ferrule	0.22 ... 2.5 mm²	
	Flexible with non insulated ferrule	0.22 ... 2.5 mm²	26 ... 14 AWG
	Flexible with insulated ferrule	0.22 ... 2.5 mm²	26 ... 14 AWG
2 conductors per clamp	Flexible with twin ferrule	0.22 ... 0.5 mm²	26 ... 20 AWG
Rated current / Rated cross section		22 A / 2.5 mm²	20 A / 12 AWG
Rated short-time withstand current (1s)		300 A	
Rated voltage		1000 V	600 V
Impulse withstand voltage		8000 V	
Protection		IP20	NEMA 1

Mounting instructions

Rail	TH 35-7.5, TH 35-15
Wire stripping length	11 mm 0.433 in
Tool (for flexible conductor without ferrule)	Ø 3.5 mm Ø 0.138 in

The connecting capacity data for one Rigid: Solid/Stranded, or one Flexible conductor (when applicable) is a mandatory information required by IEC, UL and CSA standards (Copper conductors). All other data are provided as supplementary information only. For more details, please consult our CB, UL or CSA certificates and technical datasheet available on http://www.TE.com

CE CB RoHS USR CNR CSA EAC BV

Female plugs

Description		Color	Type	Part Number		Pkg qty	Weight (1 pce) g
Female plugs	1 pole	Grey	CDK2.5	1SNK805712R0000		50	2.80
Female plugs without outer nubs - Closed	1 pole		CDK2.5-E	1SNK805713R0000		50	2.88

15 poles max.

Accessories

	Description			Color	Type	Part Number		Pkg qty	Weight (1 pce) g
1	**End stops**	5.2 mm	0.205 in	Dark grey	BAZ1	1SNK900002R0000		50	5.30
2	**End sections**	1.5 mm	0.059 in	Dark grey	EDK2.5-11	1SNK805915R0000		20	1.49
3	**Jumper bars**	2 poles	32 A (IEC)	Orange	JB5-2	1SNK905302R0000		50	1.30
		3 poles	32 A (IEC)		JB5-3	1SNK905303R0000		50	2.00
		4 poles	32 A (IEC)		JB5-4	1SNK905304R0000		50	2.70
		5 poles	32 A (IEC)		JB5-5	1SNK905305R0000		50	3.50
		10 poles	32 A (IEC)		JB5-10	1SNK905310R0000		30	7.10
		50 poles	32 A (IEC)		JB5-50	1SNK905350R0000		10	36.00
4	**Cross spacing jumpers**	3 poles	32 A (IEC)	Orange	JB85-3	1SNK900603R0000		10	2.80
5	**Circuit separators**	3 mm	0.118 in	Dark grey	CS-R2	1SNK900106R0000		20	3.80
6	**Test adapters**	For test plugs DIA 2 mm 0.079 in		Dark grey	TP2	1SNK900203R0000		20	1.70
		For test plugs DIA 4 mm 0.157 in			TP4	1SNK900205R0000		20	2.40
7	**Test connectors**	5.2 mm 0.205 in spacing		Dark grey	TC5	1SNK900200R0000		10	5.20
		End module, 5.2 mm 0.205 in			TC5-R1	1SNK900201R0000		10	5.20
8	**Coding pegs**			Dark grey	COP-ZD	1SNK900636R0000		10	3.57
9	**Terminal block markers**	Blank card		White	MC512	1SNK140000R0000		22	9.00
					MC512PA	1SNK149999R0000		20	10.00
		Blank marker			MG-CPM 13 41790	1SNB041790R0512		1960	0.236
		Universal wire markers holder		Grey	UMH	1SNK900611R0000		10	0.20

Complete list of accessories is indicated in the terminal block datasheet including end stops.
Some accessories such as jumper bars may modify the terminal block's ratings: Complete information available in the accessories section of the catalog.

Technical data valid for copper conductors only.

1SNK164020S0201

ZD2.5-22 PI-Spring pluggable terminal blocks

Feed-through - 5.2 mm 0.205 in spacing

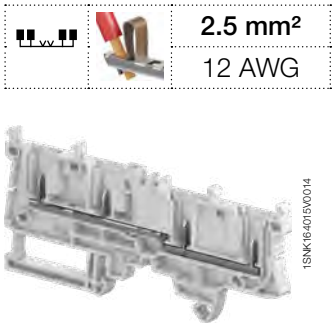

ZD2.5-22

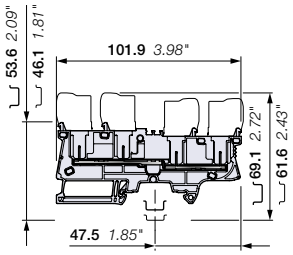

5.2 mm 0.205 in spacing

CDK2.5 CDK2.5-E

2.5 mm²
12 AWG

Description

- Increase your productivity with pluggable terminal blocks: possibility of pre-produced plugs harnesses, time saving plug and play assembly, reduced transportation panels preparation and final installation, easily connect sub-assemblies together,
- Simplify and secure your installation: in site faulty connection errors are eliminated, prior connection testing is eased and reliable, test connectors (TC5) withstanding 10 000 operations are compatible for convenient testing.

Ordering details

Description		Color	Type	Part Number		Pkg qty	Weight (1 pce) g
Feed-through	4 connections	Grey	ZD2.5-22	1SNK805017R0000		50	12.00

Main technical data

Connecting capacity		IEC	UL - CSA
1 conductor per clamp	Rigid: Solid/Stranded	0.2 ... 4 mm²	26 ... 12 AWG
	Flexible without ferrule	0.22 ... 2.5 mm²	
	Flexible with non insulated ferrule	0.22 ... 2.5 mm²	26 ... 14 AWG
	Flexible with insulated ferrule	0.22 ... 2.5 mm²	26 ... 14 AWG
2 conductors per clamp	Flexible with twin ferrule	0.22 ... 0.5 mm²	26 ... 20 AWG
Rated current / Rated cross section		22 A / 2.5 mm²	20 A / 12 AWG
Rated short-time withstand current (1s)		300 A	
Rated voltage		1000 V	600 V
Impulse withstand voltage		8000 V	
Protection		IP20	NEMA 1

Mounting instructions

Rail		TH 35-7.5, TH 35-15
Wire stripping length		11 mm 0.433 in
Tool (for flexible conductor without ferrule)		Flat screwdriver Ø 3.5 mm Ø 0.138 in

The connecting capacity data for one Rigid: Solid/Stranded, or one Flexible conductor (when applicable) is a mandatory information required by IEC, UL and CSA standards (Copper conductors). All other data are provided as supplementary information only. For more details, please consult our CB, UL or CSA certificates and technical datasheet available on http://www.TE.com

CE CB RoHS USR CNR CSA EAC BV

Female plugs

Description		Color	Type	Part Number		Pkg qty	Weight (1 pce) g
Female plugs	1 pole	Grey	CDK2.5	1SNK805712R0000		50	2.80
Female plugs without outer nubs - Closed	1 pole		CDK2.5-E	1SNK805713R0000		50	2.88

15 poles max.

Accessories

	Description			Color	Type	Part Number		Pkg qty	Weight (1 pce) g
1	**End stops**	5.2 mm	0.205 in	Dark grey	BAZ1	1SNK900002R0000		50	5.30
2	**End sections**	2.0 mm	0.079 in	Dark grey	ED2.5-22	1SNK805917R0000		20	3.64
3	**Jumper bars**	2 poles	32 A (IEC)	Orange	JB5-2	1SNK905302R0000		50	1.30
		3 poles	32 A (IEC)		JB5-3	1SNK905303R0000		50	2.00
		4 poles	32 A (IEC)		JB5-4	1SNK905304R0000		50	2.70
		5 poles	32 A (IEC)		JB5-5	1SNK905305R0000		50	3.50
		10 poles	32 A (IEC)		JB5-10	1SNK905310R0000		30	7.10
		50 poles	32 A (IEC)		JB5-50	1SNK905350R0000		10	36.00
4	**Cross spacing jumpers**	3 poles	32 A (IEC)	Orange	JB85-3	1SNK900603R0000		10	2.80
5	**Circuit separators**	3 mm	0.118 in	Dark grey	CS-R3	1SNK900107R0000		20	6.40
6	**Test adapters**	For test plugs DIA 2 mm 0.079 in		Dark grey	TP2	1SNK900203R0000		20	1.70
		For test plugs DIA 4 mm 0.157 in			TP4	1SNK900205R0000		20	2.40
7	**Test connectors**	5.2 mm 0.205 in spacing		Dark grey	TC5	1SNK900200R0000		10	5.20
		End module, 5.2 mm 0.205 in			TC5-R1	1SNK900201R0000		10	5.20
8	**Coding pegs**			Dark grey	COP-ZD	1SNK900636R0000		10	3.57
9	**Terminal block markers**	Blank card		White	MC512	1SNK140000R0000		22	9.00
					MC512PA	1SNK149999R0000		20	10.00
		Blank marker			MG-CPM 13 41790	1SNB041790R0512		1960	0.236
		Universal wire markers holder		Grey	UMH	1SNK900611R0000		10	0.20

Complete list of accessories is indicated in the terminal block datasheet including end stops.
Some accessories such as jumper bars may modify the terminal block's ratings: Complete information available in the accessories section of the catalog.

Technical data valid for copper conductors only.

1SNK164021S0201

3

ZD2.5-22-PE PI-Spring pluggable terminal blocks

Ground - 5.2 mm 0.205 in spacing

2.5 mm²

12 AWG

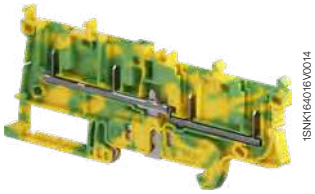

1SNK164016V0014

ZD2.5-22-PE

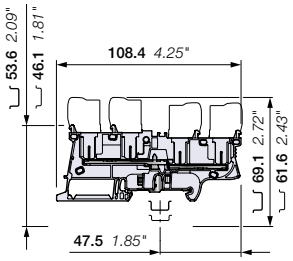

5.2 mm 0.205 in spacing

Description

- Increase your productivity with pluggable terminal blocks: possibility of pre-produced plugs harnesses, time saving plug and play assembly, reduced transportation panels preparation and final installation, easily connect sub-assemblies together,
- Simplify and secure your installation: in site faulty connection errors are eliminated, prior connection testing is eased and reliable, test connectors (TC5) withstanding 10 000 operations are compatible for convenient testing.

Ordering details

Description		Color	Type	Part Number		Pkg qty	Weight (1 pce) g
Ground	4 connections	Green-yellow	ZD2.5-22-PE	1SNK805156R0000		50	14.80

Main technical data

Connecting capacity		IEC	UL - CSA
1 conductor per clamp	Rigid: Solid/Stranded	0.2 ... 4 mm²	26 ... 12 AWG
	Flexible without ferrule	0.22 ... 2.5 mm²	
	Flexible with non insulated ferrule	0.22 ... 2.5 mm²	26 ... 14 AWG
	Flexible with insulated ferrule	0.22 ... 2.5 mm²	26 ... 14 AWG
Rated cross section		2.5 mm²	12 AWG
Rated short-time withstand current (1s)		300 A	396 A
Protection		IP20	NEMA 1

Mounting instructions

Rail		TH 35-7.5, TH 35-15
Wire stripping length		11 mm 0.433 in
Tool (for flexible conductor without ferrule)		Flat screwdriver Ø 3.5 mm Ø 0.138 in

The connecting capacity data for one Rigid: Solid/Stranded, or one Flexible conductor (when applicable) is a mandatory information required by IEC, UL and CSA standards (Copper conductors). All other data are provided as supplementary information only. For more details, please consult our CB, UL or CSA certificates and technical datasheet available on http://www.TE.com

CE CB RoHS USR CNR CSA EAC BV

CDK2.5-PE CDK2.5-PE-E

Female plugs

Description		Color	Type	Part Number		Pkg qty	Weight (1 pce) g
Female plugs	1 pole	Green-yellow	CDK2.5-PE	1SNK805750R0000		50	2.80
Female plugs without outer nubs - Closed	1 pole		CDK2.5-PE-E	1SNK805753R0000		50	2.88

15 poles max.

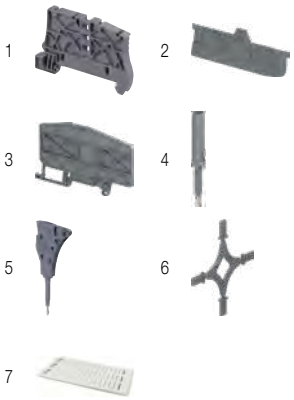

Accessories

	Description			Color	Type	Part Number		Pkg qty	Weight (1 pce) g
1	**End stops**	5.2 mm	0.205 in	Dark grey	BAZ1	1SNK900002R0000		50	5.30
2	**End sections**	2.0 mm	0.079 in	Dark grey	ED2.5-22	1SNK805917R0000		20	3.64
3	**Circuit separators**	3 mm	0.118 in	Dark grey	CS-R3	1SNK900107R0000		20	6.40
4	**Test adapters**	For test plugs DIA 2 mm 0.079 in		Dark grey	TP2	1SNK900203R0000		20	1.70
		For test plugs DIA 4 mm 0.157 in			TP4	1SNK900205R0000		20	2.40
5	**Test connectors**	5.2 mm 0.205 in spacing		Dark grey	TC5	1SNK900200R0000		10	5.20
		End module, 5.2 mm 0.205 in			TC5-R1	1SNK900201R0000		10	5.20
6	**Coding pegs**			Dark grey	COP-ZD	1SNK900636R0000		10	3.57
7	**Terminal block markers**	Blank card		White	MC512	1SNK140000R0000		22	9.00
					MC512PA	1SNK149999R0000		20	10.00
		Blank marker			MG-CPM 13 41790	1SNB041790R0512		1960	0.236
		Universal wire markers holder		Grey	UMH	1SNK900611R0000		10	0.20

Complete list of accessories is indicated in the terminal block datasheet including end stops.
Some accessories such as jumper bars may modify the terminal block's ratings: Complete information available in the accessories section of the catalog.

Technical data valid for copper conductors only.

1SNK164022S0201

ZDK2.5-11 PI-Spring pluggable terminal blocks

Feed-through - 5.2 mm 0.205 in spacing

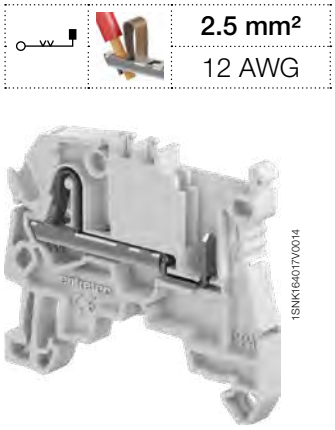

2.5 mm²
12 AWG

ZDK2.5-11

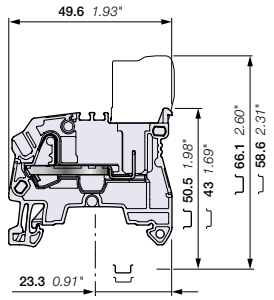

5.2 mm 0.205 in spacing

CDK2.5 CDK2.5-E CDK2.5-BL CDK2.5-BL-E

Description

- Increase your productivity with pluggable terminal blocks: possibility of pre-produced plugs harnesses, time saving plug and play assembly, reduced transportation panels preparation and final installation, easily connect sub-assemblies together,
- Simplify and secure your installation: in site faulty connection errors are eliminated, prior connection testing is eased and reliable, test connectors (TC5) withstanding 10 000 operations are compatible for convenient testing.

Ordering details

Description		Color	Type	Part Number		Pkg qty	Weight (1 pce) g
Feed-through	2 connections	Grey	ZDK2.5-11	1SNK805015R0000		50	7.00
		Blue	ZDK2.5-11-BL	1SNK805025R0000		50	7.00

Main technical data

Connecting capacity		IEC	UL - CSA
1 conductor per clamp	Rigid: Solid/Stranded	0.2 ... 4 mm²	26 ... 12 AWG
	Flexible without ferrule	0.22 ... 2.5 mm²	
	Flexible with non insulated ferrule	0.22 ... 2.5 mm²	26 ... 14 AWG
	Flexible with insulated ferrule	0.22 ... 2.5 mm²	26 ... 14 AWG
2 conductors per clamp	Flexible with twin ferrule	0.22 ... 0.5 mm²	26 ... 20 AWG
Rated current / Rated cross section		24 A / 2.5 mm²	20 A / 12 AWG
Rated short-time withstand current (1s)		300 A	
Rated voltage		1000 V	600 V
Impulse withstand voltage		8000 V	
Protection		IP20	NEMA 1

Mounting instructions

Rail		TH 35-7.5, TH 35-15
Wire stripping length		11 mm 0.433 in
Tool (for flexible conductor without ferrule)		Flat screwdriver Ø 3.5 mm Ø 0.138 in

The connecting capacity data for one Rigid: Solid/Stranded, or one Flexible conductor (when applicable) is a mandatory information required by IEC, UL and CSA standards (Copper conductors). All other data are provided as supplementary information only. For more details, please consult our CB, UL or CSA certificates and technical datasheet available on http://www.TE.com

CE CB RoHS USR CNR CSA EAC BV

Female plugs

Description		Color	Type	Part Number		Pkg qty	Weight (1 pce) g
Female plugs	1 pole	Grey	CDK2.5	1SNK805712R0000		50	2.80
Female plugs without outer nubs - Closed	1 pole		CDK2.5-E	1SNK805713R0000		50	2.88
Female plugs	1 pole	Blue	CDK2.5-BL	1SNK805742R0000		50	2.80
Female plugs without outer nubs - Closed	1 pole		CDK2.5-BL-E	1SNK805743R0000		50	2.88

15 poles max.

Accessories

	Description			Color	Type	Part Number		Pkg qty	Weight (1 pce) g
1	**End stops**	5.2 mm	0.205 in	Dark grey	BAZ1	1SNK900002R0000		50	5.30
2	**End sections**	1.5 mm	0.059 in	Dark grey	EDK2.5-11	1SNK805915R0000		20	1.49
3	**Jumper bars**	2 poles	32 A (IEC)	Orange	JB5-2	1SNK905302R0000		50	1.30
		3 poles	32 A (IEC)		JB5-3	1SNK905303R0000		50	2.00
		4 poles	32 A (IEC)		JB5-4	1SNK905304R0000		50	2.70
		5 poles	32 A (IEC)		JB5-5	1SNK905305R0000		50	3.50
		10 poles	32 A (IEC)		JB5-10	1SNK905310R0000		30	7.10
		50 poles	32 A (IEC)		JB5-50	1SNK905350R0000		10	36.00
4	**Cross spacing jumpers**	3 poles	32 A (IEC)	Orange	JB85-3	1SNK900603R0000		10	2.80
5	**Circuit separators**	3 mm	0.118 in	Dark grey	CS-R2	1SNK900106R0000		20	3.80
6	**Test adapters**	For test plugs DIA 2 mm 0.079 in		Dark grey	TP2	1SNK900203R0000		20	1.70
		For test plugs DIA 4 mm 0.157 in			TP4	1SNK900205R0000		20	2.40
7	**Test connectors**	5.2 mm 0.205 in spacing		Dark grey	TC5	1SNK900200R0000		10	5.20
		End module, 5.2 mm 0.205 in			TC5-R1	1SNK900201R0000		10	5.20
8	**Coding pegs**			Dark grey	COP-ZD	1SNK900636R0000		10	3.57
9	**Terminal block markers**	Blank card		White	MC512	1SNK140000R0000		22	9.00
					MC512PA	1SNK149999R0000		20	10.00
		Blank marker			MG-CPM 13 41790	1SNB041790R0512		1960	0.236
		Universal wire markers holder		Grey	UMH	1SNK900611R0000		10	0.20

Complete list of accessories is indicated in the terminal block datasheet including end stops.
Some accessories such as jumper bars may modify the terminal block's ratings: Complete information available in the accessories section of the catalog.

Technical data valid for copper conductors only.

1SNK164023S0201

3

ZDK2.5-21 PI-Spring pluggable terminal blocks

Feed-through - 5.2 mm 0.205 in spacing

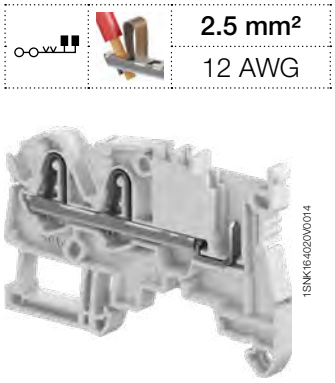

2.5 mm²
12 AWG

1SNK164020V0014

ZDK2.5-21

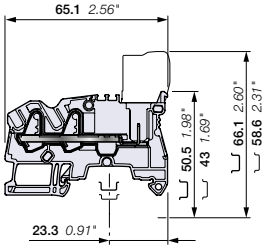

5.2 mm 0.205 in spacing

Description

- Increase your productivity with pluggable terminal blocks: possibility of pre-produced plugs harnesses, time saving plug and play assembly, reduced transportation panels preparation and final installation, easily connect sub-assemblies together,
- Simplify and secure your installation: in site faulty connection errors are eliminated, prior connection testing is eased and reliable, test connectors (TC5) withstanding 10 000 operations are compatible for convenient testing.

Ordering details

Description		Color	Type	Part Number		Pkg qty	Weight (1 pce) g
Feed-through	3 connections	Grey	ZDK2.5-21	1SNK805014R0000		50	7.47

Main technical data

Connecting capacity		IEC	UL - CSA
1 conductor per clamp	Rigid: Solid/Stranded	0.2 ... 4 mm²	26 ... 12 AWG
	Flexible without ferrule	0.22 ... 2.5 mm²	
	Flexible with non insulated ferrule	0.22 ... 2.5 mm²	26 ... 14 AWG
	Flexible with insulated ferrule	0.22 ... 2.5 mm²	26 ... 14 AWG
2 conductors per clamp	Flexible with twin ferrule	0.22 ... 0.5 mm²	26 ... 20 AWG
Rated current / Rated cross section		24 A / 2.5 mm²	20 A / 12 AWG
Rated short-time withstand current (1s)		300 A	
Rated voltage		1000 V	600 V
Impulse withstand voltage		8000 V	
Protection		IP20	NEMA 1

Mounting instructions

Rail		TH 35-7.5, TH 35-15
Wire stripping length		11 mm 0.433 in
Tool (for flexible conductor without ferrule)		Flat screwdriver Ø 3.5 mm Ø 0.138 in

The connecting capacity data for one Rigid: Solid/Stranded, or one Flexible conductor (when applicable) is a mandatory information required by IEC, UL and CSA standards (Copper conductors). All other data are provided as supplementary information only. For more details, please consult our CB, UL or CSA certificates and technical datasheet available on http://www.TE.com

CE CB RoHS USR CNR CSA EAC BV

CDK2.5 CDK2.5-E

Female plugs

Description		Color	Type	Part Number		Pkg qty	Weight (1 pce) g
Female plugs	1 pole	Grey	CDK2.5	1SNK805712R0000		50	2.80
Female plugs without outer nubs - Closed	1 pole		CDK2.5-E	1SNK805713R0000		50	2.88

15 poles max.

Accessories

	Description			Color	Type	Part Number		Pkg qty	Weight (1 pce) g
1	**End stops**	5.2 mm	0.205 in	Dark grey	BAZ1	1SNK900002R0000		50	5.30
2	**End sections**	1.5 mm	0.059 in	Dark grey	EDK2.5-21	1SNK805914R0000		20	1.90
3	**Jumper bars**	2 poles	32 A (IEC)	Orange	JB5-2	1SNK905302R0000		50	1.30
		3 poles	32 A (IEC)		JB5-3	1SNK905303R0000		50	2.00
		4 poles	32 A (IEC)		JB5-4	1SNK905304R0000		50	2.70
		5 poles	32 A (IEC)		JB5-5	1SNK905305R0000		50	3.50
		10 poles	32 A (IEC)		JB5-10	1SNK905310R0000		30	7.10
		50 poles	32 A (IEC)		JB5-50	1SNK905350R0000		10	36.00
4	**Cross spacing jumpers**	3 poles	32 A (IEC)	Orange	JB85-3	1SNK900603R0000		10	2.80
5	**Circuit separators**	3 mm	0.118 in	Dark grey	CS-R3	1SNK900107R0000		20	6.40
6	**Test adapters**	For test plugs DIA 2 mm 0.079 in		Dark grey	TP2	1SNK900203R0000		20	1.70
		For test plugs DIA 4 mm 0.157 in			TP4	1SNK900205R0000		20	2.40
7	**Test connectors**	5.2 mm 0.205 in spacing		Dark grey	TC5	1SNK900200R0000		10	5.20
		End module, 5.2 mm 0.205 in			TC5-R1	1SNK900201R0000		10	5.20
8	**Coding pegs**			Dark grey	COP-ZD	1SNK900636R0000		10	3.57
9	**Terminal block markers**	Blank card		White	MC512	1SNK140000R0000		22	9.00
					MC512PA	1SNK149999R0000		20	10.00
		Blank marker			MG-CPM 13 41790	1SNB041790R0512		1960	0.236
		Universal wire markers holder		Grey	UMH	1SNK900611R0000		10	0.20

Complete list of accessories is indicated in the terminal block datasheet including end stops.
Some accessories such as jumper bars may modify the terminal block's ratings: Complete information available in the accessories section of the catalog.

Technical data valid for copper conductors only.

1SNK164025S0201

ZDK2.5-22 PI-Spring pluggable terminal blocks

Feed-through - 5.2 mm 0.205 in spacing

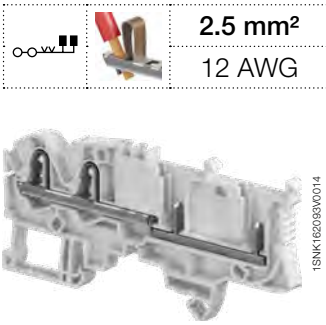

ZDK2.5-22

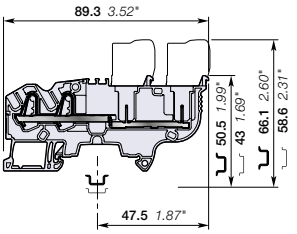

5.2 mm 0.205 in spacing

2.5 mm²
12 AWG

Description

- Increase your productivity with pluggable terminal blocks: possibility of pre-produced plugs harnesses, time saving plug and play assembly, reduced transportation panels preparation and final installation, easily connect sub-assemblies together,
- Simplify and secure your installation: in site faulty connection errors are eliminated, prior connection testing is eased and reliable, test connectors (TC5) withstanding 10 000 operations are compatible for convenient testing.

Ordering details

Description		Color	Type	Part number		Pkg qty	Weight (1 pce) g
Feed-through	4 connections	Grey	ZDK2.5-22	1SNK805010R0000		50	9.60
Feed-through	4 connections	Blue	ZDK2.5-22-BL	1SNK805020R0000		50	9.60

Main technical data

Connecting capacity		IEC	UL - CSA
1 conductor per clamp	Rigid: Solid/Stranded	0.2 ... 4 mm²	26 ... 12 AWG
	Flexible without ferrule	0.22 ... 2.5 mm²	
	Flexible with non insulated ferrule	0.22 ... 2.5 mm²	26 ... 14 AWG
	Flexible with insulated ferrule	0.22 ... 2.5 mm²	26 ... 14 AWG
2 conductors per clamp	Flexible with twin ferrule	0.22 ... 0.5 mm²	26 ... 20 AWG
Rated current / Rated cross section		24 A / 2.5 mm²	22 A / 12 AWG
Rated short-time withstand current (1s)		300 A	
Rated voltage		1000 V	600 V
Impulse withstand voltage		8000 V	
Protection		IP20	NEMA 1

Mounting instructions

Rail		TH 35-7.5, TH 35-15
Wire stripping length		11 mm 0.433 in
Tool (for flexible conductor without ferrule)		Flat screwdriver Ø 3.5 mm Ø 0.138 in

The connecting capacity data for one Rigid: Solid/Stranded, or one Flexible conductor (when applicable) is a mandatory information required by IEC, UL and CSA standards (Copper conductors). All other data are provided as supplementary information only. For more details, please consult our CB, UL or CSA certificates and technical datasheet available on http://www.TE.com

CE CB RoHS USR CNR CSA EAC BV

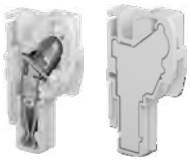

CDK2.5 CDK2.5-E

Female plugs

Description		Color	Type	Part number		Pkg qty	Weight (1 pce) g
Female plugs	1 pole	Grey	CDK2.5	1SNK805712R0000		50	2.80
Female plugs without outer nubs - Closed			CDK2.5-E	1SNK805713R0000		50	2.80

15 poles max.

Accessories

	Description			Color	Type	Part number		Pkg qty	Weight (1 pce) g
1	**End stops**	5.2 mm	0.205 in	Dark grey	BAZ1	1SNK900002R0000		50	5.30
2	**End sections**	2.2 mm	0.087 in	Dark grey	EDK2.5-22	1SNK805910R0000		20	3.15
3	**Jumper bars**	2 poles	32 A (IEC)	Orange	JB5-2	1SNK905302R0000		50	1.30
		3 poles	32 A (IEC)		JB5-3	1SNK905303R0000		50	2.00
		4 poles	32 A (IEC)		JB5-4	1SNK905304R0000		50	2.70
		5 poles	32 A (IEC)		JB5-5	1SNK905305R0000		50	3.50
		10 poles	32 A (IEC)		JB5-10	1SNK905310R0000		30	7.10
		50 poles	32 A (IEC)		JB5-50	1SNK905350R0000		10	36.00
4	**Cross spacing jumpers**	3 poles	32 A (IEC)	Orange	JB85-3	1SNK900603R0000		10	2.80
5	**Circuit separators**	3 mm	0.118 in	Dark grey	CS-R3	1SNK900107R0000		20	6.40
6	**Test adapters**	For test plugs DIA 2 mm 0.079 in		Dark grey	TP2	1SNK900203R0000		20	1.70
		For test plugs DIA 4 mm 0.157 in			TP4	1SNK900205R0000		20	2.40
7	**Test connectors**	5.2 mm 0.205 in spacing		Dark grey	TC5	1SNK900200R0000		10	5.20
		End module, 5.2 mm 0.205 in			TC5-R1	1SNK900201R0000		10	5.20
8	**Coding pegs**			Dark grey	COP-ZD	1SNK900636R0000		10	3.57
9	**Terminal block markers**	Blank marker		White	MG-CPM 13 41790	1SNB041790R0512		1960	0.23
		Blank card			MC512	1SNK140000R0000		22	9.00
					MC512PA	1SNK149999R0000		20	10.00
		Universal wire markers holder		Grey	UMH	1SNK900611R0000		10	0.20

Complete list of accessories is indicated in the terminal block datasheet including end stops.
Some accessories such as jumper bars may modify the terminal block's ratings: Complete information available in the accessories section of the catalog.

Technical data valid for copper conductors only.

1SNK164001S0201

ZDK4-22 PI-Spring pluggable terminal blocks

Feed-through - 6 mm 0.236 in spacing

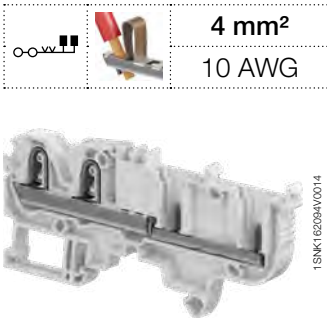

ZDK4-22

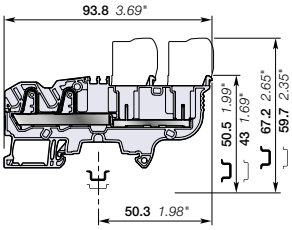

6 mm 0.236 in spacing

4 mm²
10 AWG

Description

- Increase your productivity with pluggable terminal blocks: possibility of pre-produced plugs harnesses, time saving plug and play assembly, reduced transportation panels preparation and final installation, easily connect sub-assemblies together,
- Simplify and secure your installation: in site faulty connection errors are eliminated, prior connection testing is eased and reliable, test connectors (TC5-R1 + ES-TC6) withstanding 10 000 operations are compatible for convenient testing.

Ordering details

Description		Color	Type	Part Number		Pkg qty	Weight (1 pce) g
Feed-through	4 connections	Grey	ZDK4-22	1SNK806010R0000		50	14.30

Main technical data

Connecting capacity		IEC	UL - CSA
1 conductor per clamp	Rigid: Solid/Stranded	0.5 ... 6 mm²	26 ... 10 AWG
	Flexible without ferrule	0.5 ... 4 mm²	
	Flexible with non insulated ferrule	0.5 ... 4 mm²	26 ... 12 AWG
	Flexible with insulated ferrule	0.5 ... 4 mm²	26 ... 12 AWG
2 conductors per clamp	Flexible with twin ferrule	0.5 ... 1 mm²	26 ... 18 AWG
Rated current / Rated cross section		30 A / 4 mm²	30 A / 10 AWG
Rated short-time withstand current (1s)		480 A	
Rated voltage		1000 V	600 V
Impulse withstand voltage		8000 V	
Protection		IP20	NEMA 1

Mounting instructions

Rail		TH 35-7.5, TH 35-15
Wire stripping length		12.5 mm 0.492 in
Tool (for flexible conductor without ferrule)		Flat screwdriver Ø 3.5 mm Ø 0.138 in

The connecting capacity data for one Rigid: Solid/Stranded, or one Flexible conductor (when applicable) is a mandatory information required by IEC, UL and CSA standards (Copper conductors). All other data are provided as supplementary information only. For more details, please consult our CB, UL or CSA certificates and technical datasheet available on http://www.TE.com

CE | CB | RoHS | USR CNR | CSA | EAC | BV

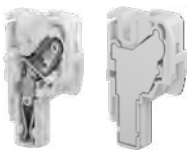

CDK4 CDK4-E

Female plugs

Description		Color	Type	Part Number		Pkg qty	Weight (1 pce) g
Female plugs	1 pole	Grey	CDK4	1SNK806712R0000		50	3.80
Female plugs without outer nubs - Closed			CDK4-E	1SNK806713R0000		50	4.50

15 poles max.

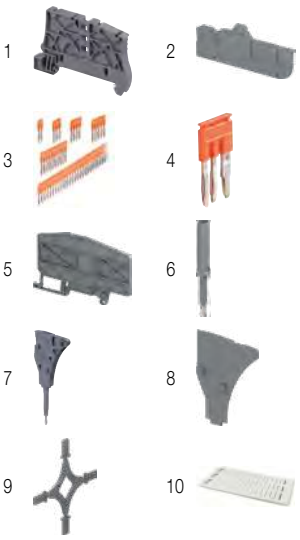

Accessories

	Description			Color	Type	Part Number		Pkg qty	Weight (1 pce) g
1	**End stops**	5.2 mm	0.205 in	Dark grey	BAZ1	1SNK900002R0000		50	5.30
2	**End sections**	2.2 mm	0.087 in	Dark grey	EDK2.5-22	1SNK805910R0000		20	3.15
3	**Jumper bars**	2 poles	41 A (IEC)	Orange	JB6-2	1SNK906302R0000		50	1.30
		3 poles	41 A (IEC)		JB6-3	1SNK906303R0000		50	2.10
		4 poles	41 A (IEC)		JB6-4	1SNK906304R0000		50	2.90
		5 poles	41 A (IEC)		JB6-5	1SNK906305R0000		50	3.60
		10 poles	41 A (IEC)		JB6-10	1SNK906310R0000		20	7.40
		50 poles	41 A (IEC)		JB6-50	1SNK906350R0000		10	38.10
4	**Cross spacing jumpers**	3 poles	32 A (IEC)	Orange	JB85-3	1SNK900603R0000		10	2.80
5	**Circuit separators**	3 mm	0.118 in	Dark grey	CS-R3	1SNK900107R0000		20	6.40
6	**Test adapters**	For test plugs DIA 2 mm 0.079 in		Dark grey	TP2	1SNK900203R0000		20	1.70
		For test plugs DIA 4 mm 0.157 in			TP4	1SNK900205R0000		20	2.40
7	**Test connectors**	End module, 5.2 mm 0.205 in		Dark grey	TC5-R1	1SNK900201R0000		10	5.20
8	**Spacers**	0.8 mm	0.031 in	Dark grey	ES-TC6	1SNK900105R0000		10	0.80
9	**Coding pegs**			Dark grey	COP-ZD	1SNK900636R0000		10	3.57
10	**Terminal block markers**	Blank marker		White	MG-CPM 13 41791	1SNB041791R0612		1680	0.27
		Blank card			MC612	1SNK150000R0000		22	10.00
					MC612PA	1SNK159999R0000		20	11.00
		Universal wire markers holder		Grey	UMH	1SNK900611R0000		10	0.20

Complete list of accessories is indicated in the terminal block datasheet including end stops.
Some accessories such as jumper bars may modify the terminal block's ratings: Complete information available in the accessories section of the catalog.

Technical data valid for copper conductors only.

1SNK164002S0201

ZDK2.5-11-PE PI-Spring pluggable terminal blocks
Ground - 5.2 mm 0.205 in spacing

2.5 mm²
12 AWG

1SNK164019V0014

ZDK2.5-11-PE

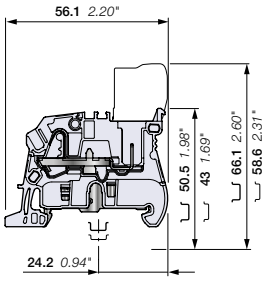

5.2 mm 0.205 in spacing

CDK2.5-PE CDK2.5-PE-E

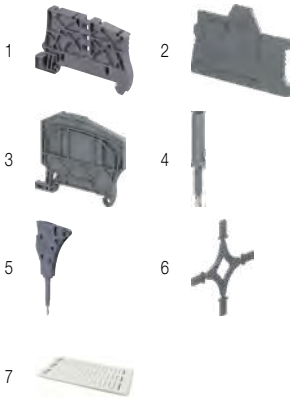

Description

- Increase your productivity with pluggable terminal blocks: possibility of pre-produced plugs harnesses, time saving plug and play assembly, reduced transportation panels preparation and final installation, easily connect sub-assemblies together,
- Simplify and secure your installation: in site faulty connection errors are eliminated, prior connection testing is eased and reliable, test connectors (TC5) withstanding 10 000 operations are compatible for convenient testing.

Ordering details

Description		Color	Type	Part Number		Pkg qty	Weight (1 pce) g
Ground	2 connections	Green-yellow	ZDK2.5-11-PE	1SNK805150R0000		50	9.62

Main technical data

Connecting capacity		IEC	UL - CSA
1 conductor per clamp	Rigid: Solid/Stranded	0.2 ... 4 mm²	26 ... 12 AWG
	Flexible without ferrule	0.22 ... 2.5 mm²	
	Flexible with non insulated ferrule	0.22 ... 2.5 mm²	26 ... 14 AWG
	Flexible with insulated ferrule	0.22 ... 2.5 mm²	26 ... 14 AWG
Rated cross section		2.5 mm²	12 AWG
Rated short-time withstand current (1s)		300 A	396 A
Protection		IP20	NEMA 1

Mounting instructions

Rail		TH 35-7.5, TH 35-15
Wire stripping length		11 mm 0.433 in
Tool (for flexible conductor without ferrule)		Flat screwdriver Ø 3.5 mm Ø 0.138 in

The connecting capacity data for one Rigid: Solid/Stranded, or one Flexible conductor (when applicable) is a mandatory information required by IEC, UL and CSA standards (Copper conductors). All other data are provided as supplementary information only. For more details, please consult our CB, UL or CSA certificates and technical datasheet available on http://www.TE.com

CE CB RoHS USR CNR CSA EAC BV

Female plugs

Description		Color	Type	Part Number		Pkg qty	Weight (1 pce) g
Female plugs	1 pole	Green-yellow	CDK2.5-PE	1SNK805750R0000		50	2.80
Female plugs without outer nubs - Closed	1 pole		CDK2.5-PE-E	1SNK805753R0000		50	2.88

15 poles max.

Accessories

	Description			Color	Type	Part Number		Pkg qty	Weight (1 pce) g
1	**End stops**	5.2 mm	0.205 in	Dark grey	BAZ1	1SNK900002R0000		50	5.30
2	**End sections**	1.5 mm	0.059 in	Dark grey	EDK2.5-11	1SNK805915R0000		20	1.49
3	**Circuit separators**	3 mm	0.118 in	Dark grey	CS-R2	1SNK900106R0000		20	3.80
4	**Test adapters**	For test plugs DIA 2 mm 0.079 in		Dark grey	TP2	1SNK900203R0000		20	1.70
		For test plugs DIA 4 mm 0.157 in			TP4	1SNK900205R0000		20	2.40
5	**Test connectors**	5.2 mm 0.205 in spacing		Dark grey	TC5	1SNK900200R0000		10	5.20
		End module, 5.2 mm 0.205 in			TC5-R1	1SNK900201R0000		10	5.20
6	**Coding pegs**			Dark grey	COP-ZD	1SNK900636R0000		10	3.57
7	**Terminal block markers**	Blank card		White	MC512	1SNK140000R0000		22	9.00
					MC512PA	1SNK149999R0000		20	10.00
		Blank marker			MG-CPM 13 41790	1SNB041790R0512		1960	0.236
		Universal wire markers holder		Grey	UMH	1SNK900611R0000		10	0.20

Complete list of accessories is indicated in the terminal block datasheet including end stops.
Some accessories such as jumper bars may modify the terminal block's ratings: Complete information available in the accessories section of the catalog.

Technical data valid for copper conductors only.

1SNK164024S0201

ZDK2.5-22-PE PI-Spring pluggable terminal blocks

Feed-through - 5.2 mm 0.205 in spacing

2.5 mm²

12 AWG

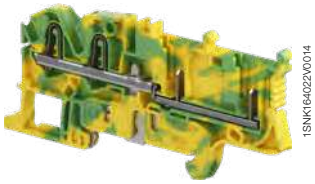

1SNK164022V0014

ZDK2.5-22-PE

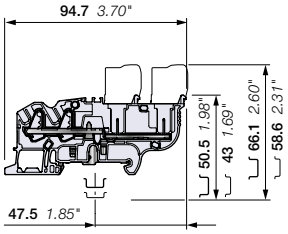

5.2 mm 0.205 in spacing

Description

- Increase your productivity with pluggable terminal blocks: possibility of pre-produced plugs harnesses, time saving plug and play assembly, reduced transportation panels preparation and final installation, easily connect sub-assemblies together,
- Simplify and secure your installation: in site faulty connection errors are eliminated, prior connection testing is eased and reliable, test connectors (TC5) withstanding 10 000 operations are compatible for convenient testing.

Ordering details

Description		Color	Type	Part Number		Pkg qty	Weight (1 pce) g
Ground	4 connections	Green-yellow	ZDK2.5-22-PE	1SNK805152R0000		50	14.05

Main technical data

Connecting capacity		IEC	UL - CSA
1 conductor per clamp	Rigid: Solid/Stranded	0.2 ... 4 mm²	26 ... 12 AWG
	Flexible without ferrule	0.22 ... 2.5 mm²	
	Flexible with non insulated ferrule	0.22 ... 2.5 mm²	26 ... 14 AWG
	Flexible with insulated ferrule	0.22 ... 2.5 mm²	26 ... 14 AWG
Rated cross section		2.5 mm²	12 AWG
Rated short-time withstand current (1s)		300 A	396 A
Protection		IP20	NEMA 1

Mounting instructions

Rail		TH 35-7.5, TH 35-15
Wire stripping length		11 mm 0.433 in
Tool (for flexible conductor without ferrule)		Flat screwdriver Ø 3.5 mm Ø 0.138 in

The connecting capacity data for one Rigid: Solid/Stranded, or one Flexible conductor (when applicable) is a mandatory information required by IEC, UL and CSA standards (Copper conductors). All other data are provided as supplementary information only. For more details, please consult our CB, UL or CSA certificates and technical datasheet available on http://www.TE.com

CE CB RoHS USR CNR CSA EAC BV

CDK2.5-PE CDK2.5-PE-E

Female plugs

Description		Color	Type	Part Number		Pkg qty	Weight (1 pce) g
Female plugs	1 pole	Green-yellow	CDK2.5-PE	1SNK805750R0000		50	2.80
Female plugs without outer nubs - Closed	1 pole		CDK2.5-PE-E	1SNK805753R0000		50	2.88

15 poles max.

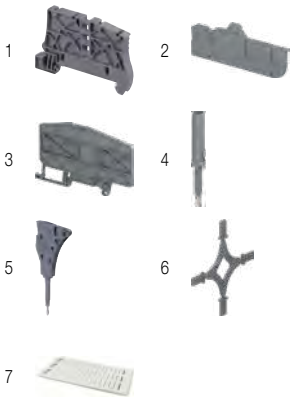

Accessories

	Description			Color	Type	Part Number		Pkg qty	Weight (1 pce) g
1	**End stops**	5.2 mm	0.205 in	Dark grey	BAZ1	1SNK900002R0000		50	5.30
2	**End sections**	2.2 mm	0.087 in	Dark grey	EDK2.5-22	1SNK805910R0000		20	3.15
3	**Circuit separators**	3 mm	0.118 in	Dark grey	CS-R3	1SNK900107R0000		20	6.40
4	**Test adapters**	For test plugs DIA 2 mm 0.079 in		Dark grey	TP2	1SNK900203R0000		20	1.70
		For test plugs DIA 4 mm 0.157 in			TP4	1SNK900205R0000		20	2.40
5	**Test connectors**	5.2 mm 0.205 in spacing		Dark grey	TC5	1SNK900200R0000		10	5.20
		End module, 5.2 mm 0.205 in			TC5-R1	1SNK900201R0000		10	5.20
6	**Coding pegs**			Dark grey	COP-ZD	1SNK900636R0000		10	3.57
7	**Terminal block markers**	Blank card		White	MC512	1SNK140000R0000		22	9.00
					MC512PA	1SNK149999R0000		20	10.00
		Blank marker			MG-CPM 13 41790	1SNB041790R0512		1960	0.236
		Universal wire markers holder		Grey	UMH	1SNK900611R0000		10	0.20

Complete list of accessories is indicated in the terminal block datasheet including end stops.
Some accessories such as jumper bars may modify the terminal block's ratings: Complete information available in the accessories section of the catalog.

Technical data valid for copper conductors only.

1SNK164026S0201

ZDK2.5-D2 PI-Spring pluggable terminal blocks

Double deck feed-through 2 circuits - 5.2 mm 0.205 in spacing

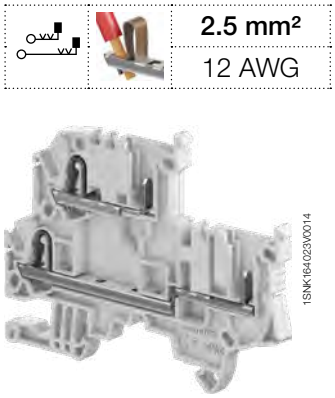

2.5 mm²
12 AWG

1SNK164023V0014

ZDK2.5-D2

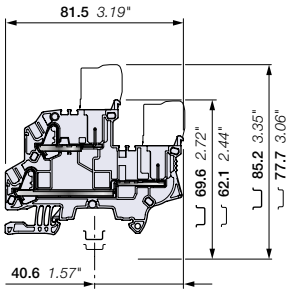

5.2 mm 0.205 in spacing

CDK2.5 CDK2.5-E CDK2.5-BL CDK2.5-BL-E

Description

- Increase your productivity with pluggable terminal blocks: possibility of pre-produced plugs harnesses, time saving plug and play assembly, reduced transportation panels preparation and final installation, easily connect sub-assemblies together,
- Simplify and secure your installation: in site faulty connection errors are eliminated, prior connection testing is eased and reliable, test connectors (TC5) withstanding 10 000 operations are compatible for convenient testing.

Ordering details

Description		Color	Type	Part Number		Pkg qty	Weight (1 pce) g
Feed-through	double deck 4 connections	Grey	ZDK2.5-D2	1SNK805213R0000		50	11.89
		Blue	ZDK2.5-D2-BL	1SNK805223R0000		50	11.89

Main technical data

Connecting capacity		IEC	UL - CSA
1 conductor per clamp	Rigid: Solid/Stranded	0.2 ... 4 mm²	26 ... 12 AWG
	Flexible without ferrule	0.22 ... 2.5 mm²	
	Flexible with non insulated ferrule	0.22 ... 2.5 mm²	26 ... 14 AWG
	Flexible with insulated ferrule	0.22 ... 2.5 mm²	26 ... 14 AWG
2 conductors per clamp	Flexible with twin ferrule	0.22 ... 0.5 mm²	26 ... 20 AWG
Rated current / Rated cross section		22 A / 2.5 mm²	20 A / 12 AWG
Rated short-time withstand current (1s)		300 A	
Rated voltage		800 V	600 V
Impulse withstand voltage		8000 V	
Protection		IP20	NEMA 1

Mounting instructions

Rail	TH 35-7.5, TH 35-15
Wire stripping length	11 mm 0.433 in
Tool (for flexible conductor without ferrule)	Flat screwdriver Ø 3.5 mm Ø 0.138 in

The connecting capacity data for one Rigid: Solid/Stranded, or one Flexible conductor (when applicable) is a mandatory information required by IEC, UL and CSA standards (Copper conductors). All other data are provided as supplementary information only. For more details, please consult our CB, UL or CSA certificates and technical datasheet available on http://www.TE.com

CE CB RoHS USR CNR CSA EAC BV

Female plugs

Description		Color	Type	Part Number		Pkg qty	Weight (1 pce) g
Female plugs	1 pole	Grey	CDK2.5	1SNK805712R0000		50	2.80
Female plugs without outer nubs - Closed	1 pole		CDK2.5-E	1SNK805713R0000		50	2.88
Female plugs	1 pole	Blue	CDK2.5-BL	1SNK805742R0000		50	2.80
Female plugs without outer nubs - Closed	1 pole		CDK2.5-BL-E	1SNK805743R0000		50	2.88

15 poles max.

Accessories

	Description			Color	Type	Part Number		Pkg qty	Weight (1 pce) g
1	**End stops**	5.2 mm	0.205 in	Dark grey	BAZ1	1SNK900002R0000		50	5.30
2	**End sections**	2.0 mm	0.079 in	Dark grey	EDK2.5-D	1SNK805913R0000		20	3.88
3	**Jumper bars**	2 poles	32 A (IEC)	Orange	JB5-2	1SNK905302R0000		50	1.30
		3 poles	32 A (IEC)		JB5-3	1SNK905303R0000		50	2.00
		4 poles	32 A (IEC)		JB5-4	1SNK905304R0000		50	2.70
		5 poles	32 A (IEC)		JB5-5	1SNK905305R0000		50	3.50
		10 poles	32 A (IEC)		JB5-10	1SNK905310R0000		30	7.10
		50 poles	32 A (IEC)		JB5-50	1SNK905350R0000		10	36.00
4	**Cross spacing jumpers**	3 poles	32 A (IEC)	Orange	JB85-3	1SNK900603R0000		10	2.80
5	**Test adapters**	For test plugs DIA 2 mm 0.079 in		Dark grey	TP2	1SNK900203R0000		20	1.70
		For test plugs DIA 4 mm 0.157 in			TP4	1SNK900205R0000		20	2.40
6	**Test connectors**	5.2 mm 0.205 in spacing		Dark grey	TC5	1SNK900200R0000		10	5.20
		End module, 5.2 mm 0.205 in			TC5-R1	1SNK900201R0000		10	5.20
7	**Coding pegs**			Dark grey	COP-ZD	1SNK900636R0000		10	3.57
8	**Terminal block markers**	Blank card		White	MC512	1SNK140000R0000		22	9.00
					MC512PA	1SNK149999R0000		20	10.00
		Blank marker			MG-CPM 13 41790	1SNB041790R0512		1960	0.236
		Universal wire markers holder		Grey	UMH	1SNK900611R0000		10	0.20

Complete list of accessories is indicated in the terminal block datasheet including end stops.
Some accessories such as jumper bars may modify the terminal block's ratings: Complete information available in the accessories section of the catalog.

Technical data valid for copper conductors only.

1SNK164029S0201

3

ZDK2.5-D1 PI-Spring pluggable terminal blocks

Double deck feed-through 1 circuit - 5.2 mm 0.205 in spacing

2.5 mm²

12 AWG

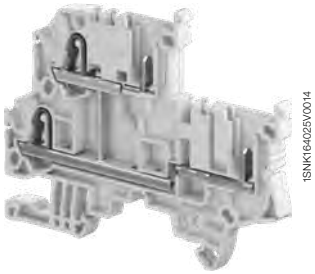

1SNK164025V0014

ZDK2.5-D1

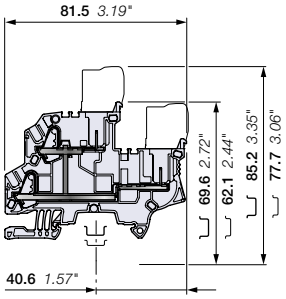

5.2 mm 0.205 in spacing

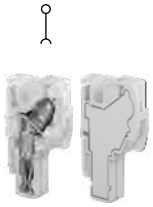

CDK2.5 CDK2.5-E

Description

- Increase your productivity with pluggable terminal blocks: possibility of pre-produced plugs harnesses, time saving plug and play assembly, reduced transportation panels preparation and final installation, easily connect sub-assemblies together,
- Simplify and secure your installation: in site faulty connection errors are eliminated, prior connection testing is eased and reliable, test connectors (TC5) withstanding 10 000 operations are compatible for convenient testing.

Ordering details

Description		Color	Type	Part Number		Pkg qty	Weight (1 pce) g
Feed-through	double deck 4 connections	Grey	ZDK2.5-D1	1SNK805214R0000		50	12.46

Main technical data

Connecting capacity		IEC	UL - CSA
1 conductor per clamp	Rigid: Solid/Stranded	0.2 ... 4 mm²	26 ... 12 AWG
	Flexible without ferrule	0.22 ... 2.5 mm²	
	Flexible with non insulated ferrule	0.22 ... 2.5 mm²	26 ... 14 AWG
	Flexible with insulated ferrule	0.22 ... 2.5 mm²	26 ... 14 AWG
2 conductors per clamp	Flexible with twin ferrule	0.22 ... 0.5 mm²	26 ... 20 AWG
Rated current / Rated cross section		22 A / 2.5 mm²	20 A / 12 AWG
Rated short-time withstand current (1s)		300 A	
Rated voltage		800 V	600 V
Impulse withstand voltage		8000 V	
Protection		IP20	NEMA 1

Mounting instructions

Rail		TH 35-7.5, TH 35-15
Wire stripping length		11 mm 0.433 in
Tool (for flexible conductor without ferrule)		Flat screwdriver Ø 3.5 mm Ø 0.138 in

The connecting capacity data for one Rigid: Solid/Stranded, or one Flexible conductor (when applicable) is a mandatory information required by IEC, UL and CSA standards (Copper conductors). All other data are provided as supplementary information only. For more details, please consult our CB, UL or CSA certificates and technical datasheet available on http://www.TE.com

CE CB RoHS USR CNR CSA EAC BV

Female plugs

Description		Color	Type	Part Number		Pkg qty	Weight (1 pce) g
Female plugs	1 pole	Grey	CDK2.5	1SNK805712R0000		50	2.80
Female plugs without outer nubs - Closed	1 pole		CDK2.5-E	1SNK805713R0000		50	2.88

15 poles max.

Accessories

	Description			Color	Type	Part Number		Pkg qty	Weight (1 pce) g
1	**End stops**	5.2 mm	0.205 in	Dark grey	BAZ1	1SNK900002R0000		50	5.30
2	**End sections**	2.0 mm	0.079 in	Dark grey	EDK2.5-D	1SNK805913R0000		20	3.88
3	**Jumper bars**	2 poles	32 A (IEC)	Orange	JB5-2	1SNK905302R0000		50	1.30
		3 poles	32 A (IEC)		JB5-3	1SNK905303R0000		50	2.00
		4 poles	32 A (IEC)		JB5-4	1SNK905304R0000		50	2.70
		5 poles	32 A (IEC)		JB5-5	1SNK905305R0000		50	3.50
		10 poles	32 A (IEC)		JB5-10	1SNK905310R0000		30	7.10
		50 poles	32 A (IEC)		JB5-50	1SNK905350R0000		10	36.00
4	**Cross spacing jumpers**	3 poles	32 A (IEC)	Orange	JB85-3	1SNK900603R0000		10	2.80
5	**Test adapters**	For test plugs DIA 2 mm 0.079 in		Dark grey	TP2	1SNK900203R0000		20	1.70
		For test plugs DIA 4 mm 0.157 in			TP4	1SNK900205R0000		20	2.40
6	**Test connectors**	5.2 mm 0.205 in spacing		Dark grey	TC5	1SNK900200R0000		10	5.20
		End module, 5.2 mm 0.205 in			TC5-R1	1SNK900201R0000		10	5.20
7	**Coding pegs**			Dark grey	COP-ZD	1SNK900636R0000		10	3.57
8	**Terminal block markers**	Blank card		White	MC512	1SNK140000R0000		22	9.00
					MC512PA	1SNK149999R0000		20	10.00
		Blank marker			MG-CPM 13 41790	1SNB041790R0512		1960	0.236
		Universal wire markers holder		Grey	UMH	1SNK900611R0000		10	0.20

Complete list of accessories is indicated in the terminal block datasheet including end stops.
Some accessories such as jumper bars may modify the terminal block's ratings: Complete information available in the accessories section of the catalog.

Technical data valid for copper conductors only.

1SNK164027S0201

ZDK2.5-D2-PE PI-Spring pluggable terminal blocks

Double deck feed-through + ground - 5.2 mm 0.205 in spacing

2.5 mm²

12 AWG

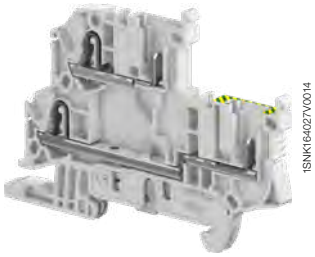

1SNK164027V0014

ZDK2.5-D2-PE

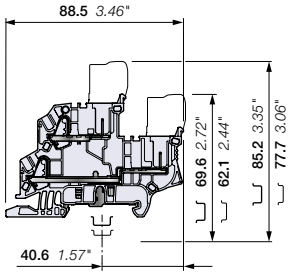

5.2 mm 0.205 in spacing

Description

- Increase your productivity with pluggable terminal blocks: possibility of pre-produced plugs harnesses, time saving plug and play assembly, reduced transportation panels preparation and final installation, easily connect sub-assemblies together,
- Simplify and secure your installation: in site faulty connection errors are eliminated, prior connection testing is eased and reliable, test connectors (TC5) withstanding 10 000 operations are compatible for convenient testing.

Ordering details

Description		Color	Type	Part Number		Pkg qty	Weight (1 pce) g
Feed-through + ground	double deck 4 connections	Grey, Green-yellow	ZDK2.5-D2-PE	1SNK805212R0000		50	16.13

Main technical data

Connecting capacity		IEC	UL - CSA
1 conductor per clamp	Rigid: Solid/Stranded	0.2 ... 4 mm²	26 ... 12 AWG
	Flexible without ferrule	0.22 ... 2.5 mm²	
	Flexible with non insulated ferrule	0.22 ... 2.5 mm²	26 ... 14 AWG
	Flexible with insulated ferrule	0.22 ... 2.5 mm²	26 ... 14 AWG
2 conductors per clamp	Flexible with twin ferrule	0.22 ... 0.5 mm²	26 ... 20 AWG
Rated current / Rated cross section		22 A / 2.5 mm²	20 A / 12 AWG
Rated short-time withstand current (1s)		300 A	396 A
Rated voltage		800 V	600 V
Impulse withstand voltage		8000 V	
Protection		IP20	NEMA 1

Mounting instructions

Rail	TH 35-7.5, TH 35-15
Wire stripping length	11 mm 0.433 in
Tool (for flexible conductor without ferrule)	Flat screwdriver Ø 3.5 mm Ø 0.138 in

The connecting capacity data for one Rigid: Solid/Stranded, or one Flexible conductor (when applicable) is a mandatory information required by IEC, UL and CSA standards (Copper conductors). All other data are provided as supplementary information only. For more details, please consult our CB, UL or CSA certificates and technical datasheet available on http://www.TE.com

CE CB RoHS USR CNR CSA EAC BV

CDK2.5 CDK2.5-E CDK2.5-PE CDK2.5-PE-E

Female plugs

Description		Color	Type	Part Number		Pkg qty	Weight (1 pce) g
Female plugs	1 pole	Grey	CDK2.5	1SNK805712R0000		50	2.80
Female plugs without outer nubs - Closed	1 pole		CDK2.5-E	1SNK805713R0000		50	2.88
Female plugs	1 pole	Green-yellow	CDK2.5-PE	1SNK805750R0000		50	2.80
Female plugs without outer nubs - Closed	1 pole		CDK2.5-PE-E	1SNK805753R0000		50	2.88

15 poles max.

Accessories

	Description			Color	Type	Part Number		Pkg qty	Weight (1 pce) g
1	**End stops**	5.2 mm	0.205 in	Dark grey	BAZ1	1SNK900002R0000		50	5.30
2	**End sections**	2.0 mm	0.079 in	Dark grey	EDK2.5-D	1SNK805913R0000		20	3.88
3	**Jumper bars**	2 poles	32 A (IEC)	Orange	JB5-2	1SNK905302R0000		50	1.30
		3 poles	32 A (IEC)		JB5-3	1SNK905303R0000		50	2.00
		4 poles	32 A (IEC)		JB5-4	1SNK905304R0000		50	2.70
		5 poles	32 A (IEC)		JB5-5	1SNK905305R0000		50	3.50
		10 poles	32 A (IEC)		JB5-10	1SNK905310R0000		30	7.10
		50 poles	32 A (IEC)		JB5-50	1SNK905350R0000		10	36.00
4	**Cross spacing jumpers**	3 poles	32 A (IEC)	Orange	JB85-3	1SNK900603R0000		10	2.80
5	**Test adapters**	For test plugs DIA 2 mm 0.079 in		Dark grey	TP2	1SNK900203R0000		20	1.70
		For test plugs DIA 4 mm 0.157 in			TP4	1SNK900205R0000		20	2.40
6	**Test connectors**	5.2 mm 0.205 in spacing		Dark grey	TC5	1SNK900200R0000		10	5.20
		End module, 5.2 mm 0.205 in			TC5-R1	1SNK900201R0000		10	5.20
7	**Coding pegs**			Dark grey	COP-ZD	1SNK900636R0000		10	3.57
8	**Terminal block markers**	Blank card		White	MC512	1SNK140000R0000		22	9.00
					MC512PA	1SNK149999R0000		20	10.00
		Blank marker			MG-CPM 13 41790	1SNB041790R0512		1960	0.236
		Universal wire markers holder		Grey	UMH	1SNK900611R0000		10	0.20

Complete list of accessories is indicated in the terminal block datasheet including end stops.
Some accessories such as jumper bars may modify the terminal block's ratings: Complete information available in the accessories section of the catalog.

Technical data valid for copper conductors only.

1SNK164030S0201

ZDK2.5-D1-PE PI-Spring pluggable terminal blocks

Double deck ground - 5.2 mm 0.205 in spacing

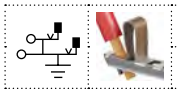

2.5 mm²

12 AWG

ZDK2.5-D1-PE

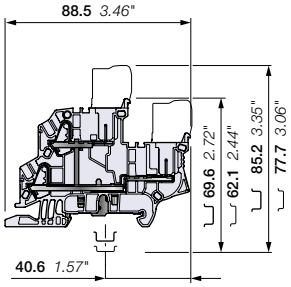

5.2 mm 0.205 in spacing

CDK2.5-PE CDK2.5-PE-E

Description

- Increase your productivity with pluggable terminal blocks: possibility of pre-produced plugs harnesses, time saving plug and play assembly, reduced transportation panels preparation and final installation, easily connect sub-assemblies together,
- Simplify and secure your installation: in site faulty connection errors are eliminated, prior connection testing is eased and reliable, test connectors (TC5) withstanding 10 000 operations are compatible for convenient testing.

Ordering details

Description		Color	Type	Part Number		Pkg qty	Weight (1 pce) g
Ground	double deck 4 connections	Green-yellow	ZDK2.5-D1-PE	1SNK805250R0000		50	16.80

Main technical data

Connecting capacity		IEC	UL - CSA
1 conductor per clamp	Rigid: Solid/Stranded	0.2 ... 4 mm²	26 ... 12 AWG
	Flexible without ferrule	0.22 ... 2.5 mm²	
	Flexible with non insulated ferrule	0.22 ... 2.5 mm²	26 ... 14 AWG
	Flexible with insulated ferrule	0.22 ... 2.5 mm²	26 ... 14 AWG
Rated cross section		2.5 mm²	12 AWG
Rated short-time withstand current (1s)		300 A	396 A
Protection		IP20	NEMA 1

Mounting instructions

Rail		TH 35-7.5, TH 35-15
Wire stripping length		11 mm 0.433 in
Tool (for flexible conductor without ferrule)		Flat screwdriver Ø 3.5 mm Ø 0.138 in

The connecting capacity data for one Rigid: Solid/Stranded, or one Flexible conductor (when applicable) is a mandatory information required by IEC, UL and CSA standards (Copper conductors). All other data are provided as supplementary information only. For more details, please consult our CB, UL or CSA certificates and technical datasheet available on http://www.TE.com

CE CB RoHS USR CNR CSA EAC BV

Female plugs

Description		Color	Type	Part Number		Pkg qty	Weight (1 pce) g
Female plugs	1 pole	Green-yellow	CDK2.5-PE	1SNK805750R0000		50	2.80
Female plugs without outer nubs - Closed	1 pole		CDK2.5-PE-E	1SNK805753R0000		50	2.88

15 poles max.

Accessories

	Description			Color	Type	Part Number		Pkg qty	Weight (1 pce) g
1	**End stops**	5.2 mm	0.205 in	Dark grey	BAZ1	1SNK900002R0000		50	5.30
2	**End sections**	2.0 mm	0.079 in	Dark grey	EDK2.5-D	1SNK805913R0000		20	3.88
3	**Test adapters**	For test plugs DIA 2 mm 0.079 in		Dark grey	TP2	1SNK900203R0000		20	1.70
		For test plugs DIA 4 mm 0.157 in			TP4	1SNK900205R0000		20	2.40
4	**Test connectors**	5.2 mm 0.205 in spacing		Dark grey	TC5	1SNK900200R0000		10	5.20
		End module, 5.2 mm 0.205 in			TC5-R1	1SNK900201R0000		10	5.20
5	**Coding pegs**			Dark grey	COP-ZD	1SNK900636R0000		10	3.57
6	**Terminal block markers**	Blank card		White	MC512	1SNK140000R0000		22	9.00
					MC512PA	1SNK149999R0000		20	10.00
		Universal wire markers holder		Grey	UMH	1SNK900611R0000		10	0.20

Complete list of accessories is indicated in the terminal block datasheet including end stops.
Some accessories such as jumper bars may modify the terminal block's ratings: Complete information available in the accessories section of the catalog.

Technical data valid for copper conductors only.

1SNK164028S0201

CDK2.5 PI-Spring female plugs

Female plug - 5.2 mm 0.205 in spacing

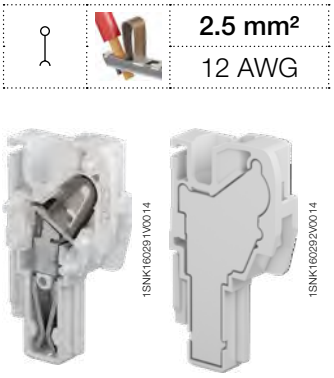

CDK2.5 CDK2.5-E

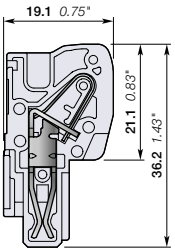

5.2 mm 0.205 in spacing

2.5 mm²
12 AWG

Description

- Create your own female plug assemblies without any special tools, easily snap together multiple plugs for optimal ergonomics and quick assembly,
- Increase your flexibility: eliminate stock of pre-configured female plugs, easily add an extra plug in case of needed modification,
- Reduce your stock of unitary plugs up to 30%: only two plug variants are required to compose your own subsets of plugs from 2 to 15 poles.

Ordering details

Description	Color	Type	Part number		Pkg qty	Weight (1 pce) g
Female plugs	Grey	CDK2.5	1SNK805712R0000		50	2.80
	Blue	CDK2.5-BL	1SNK805742R0000		50	2.80
	Green-Yellow	CDK2.5-PE	1SNK805750R0000		50	2.80
Female plugs without outer nubs - Closed	Grey	CDK2.5-E	1SNK805713R0000		50	2.80
	Blue	CDK2.5-BL-E	1SNK805743R0000		50	2.80
	Green-Yellow	CDK2.5-PE-E	1SNK805753R0000		50	2.80

Main technical data

Connecting capacity		IEC	UL - CSA
1 conductor per clamp	Rigid: Solid/Stranded	0.2 ... 4 mm²	26 ... 12 AWG
	Flexible without ferrule	0.22 ... 2.5 mm²	
	Flexible with non insulated ferrule	0.22 ... 2.5 mm²	26 ... 14 AWG
	Flexible with insulated ferrule	0.22 ... 2.5 mm²	26 ... 14 AWG
2 conductors per clamp	Flexible with twin ferrule	0.22 ... 0.5 mm²	26 ... 20 AWG
Rated current / Rated cross section		24 A / 2.5 mm²	22 A / 12 AWG
Rated short-time withstand current (1s)		300 A	
Rated voltage		1000 V	600 V
Impulse withstand voltage		8000 V	
Protection		IP20	NEMA 1

Mounting instructions

Rail		
Wire stripping length		11 mm 0.433 in
Tool (for flexible conductor without ferrule)		Flat screwdriver Ø 3.5 mm Ø 0.138 in

The connecting capacity data for one Rigid: Solid/Stranded, or one Flexible conductor (when applicable) is a mandatory information required by IEC, UL and CSA standards (Copper conductors). All other data are provided as supplementary information only. For more details, please consult our CB, UL or CSA certificates and technical datasheet available on http://www.TE.com

CE CB RoHS USR CNR CSA EAC BV

Mounting instructions

15 poles max.

Accessories

	Description		Color	Type	Part number		Pkg qty	Weight (1 pce) g
1	**Locking devices**	9.4 mm 0.370 in spacing	Black	VR-ZD	1SNK900637R0000		50	0.7
2	**Cable clamp**	9.4 mm 0.370 in spacing	Dark grey	PT-ZD	1SNK900660R0000		50	1.04
3	**Terminal block markers**	Blank marker	White	MG-CPM 13 41790	1SNB041790R0512		1960	0.23
		Blank strip label		MG-CPMFA 43196	1SNB043196R0012		350	2.56
		Blank card		MC512	1SNK140000R0000		22	9.00
				MC512PA	1SNK149999R0000		20	10.00
		Universal wire markers holder	Grey	UMH	1SNK900611R0000		10	0.20

Complete list of accessories is indicated in the terminal block datasheet including end stops.
Some accessories such as jumper bars may modify the terminal block's ratings: Complete information available in the accessories section of the catalog.

1SNK164005S0201

Technical data valid for copper conductors only.

CDK2.5-J PI-Spring female plugs

Female plug - 5.2 mm 0.205 in spacing

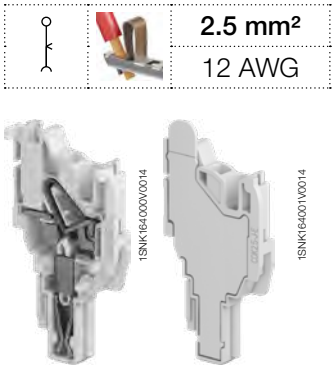

CDK2.5-J CDK2.5-J-E

Description

- Create your own female plug assemblies without any special tools, easily snap together multiple plugs for optimal ergonomics and quick assembly,
- Increase your flexibility: eliminate stock of pre-configured female plugs, easily add an extra plug in case of needed modification,
- Reduce your stock of unitary plugs up to 30%: only two plug variants are required to compose your own subsets of plugs from 2 to 15 poles.

Description	Color	Type	Part Number	Pkg qty	Weight (1 pce) g
Female plugs	Grey	CDK2.5-J	1SNK805738R0000	50	4.08
	Blue	CDK2.5-J-BL	1SNK805744R0000	50	4.08
	Green-yellow	CDK2.5-J-PE	1SNK805748R0000	50	4.08
Female plugs without outer nubs - Closed	Grey	CDK2.5-J-E	1SNK805739R0000	50	4.34
	Blue	CDK2.5-J-BL-E	1SNK805745R0000	50	4.34
	Green-yellow	CDK2.5-J-PE-E	1SNK805749R0000	50	4.34

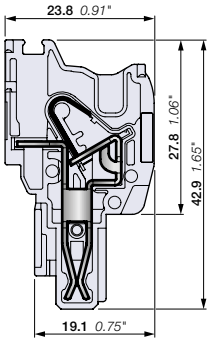

5.2 mm 0.205 in spacing

Main technical data

Connecting capacity		IEC	UL - CSA
1 conductor per clamp	Rigid: Solid/Stranded	0.2 ... 4 mm²	26 ... 12 AWG
	Flexible without ferrule	0.22 ... 2.5 mm²	
	Flexible with non insulated ferrule	0.22 ... 2.5 mm²	26 ... 14 AWG
	Flexible with insulated ferrule	0.22 ... 2.5 mm²	26 ... 14 AWG
2 conductors per clamp	Flexible with twin ferrule	0.22 ... 0.5 mm²	26 ... 20 AWG
Rated current / Rated cross section		24 A / 2.5 mm²	20 A / 12 AWG
Rated short-time withstand current (1s)		300 A	
Rated voltage		800 V	600 V
Impulse withstand voltage		8000 V	
Protection		IP20	NEMA 1

Mounting instructions

Rail		
Wire stripping length		11 mm 0.433 in
Tool (for flexible conductor without ferrule)		Flat screwdriver Ø 3.5 mm Ø 0.138 in

The connecting capacity data for one Rigid: Solid/Stranded, or one Flexible conductor (when applicable) is a mandatory information required by IEC, UL and CSA standards (Copper conductors). All other data are provided as supplementary information only. For more details, please consult our CB, UL or CSA certificates and technical datasheet available on http://www.TE.com

CE CB RoHS USR CNR CSA EAC BV

Mounting instructions

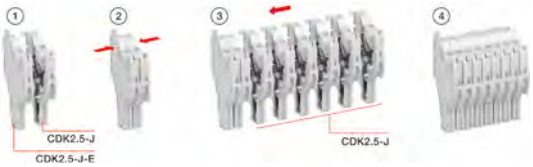

15 poles max.

Accessories

	Description			Color	Type	Part Number	Pkg qty	Weight (1 pce) g
1	Jumper bars	2 poles	32 A (IEC)	Orange	JB5-2	1SNK905302R0000	50	1.30
		3 poles	32 A (IEC)		JB5-3	1SNK905303R0000	50	2.00
		4 poles	32 A (IEC)		JB5-4	1SNK905304R0000	50	2.70
		5 poles	32 A (IEC)		JB5-5	1SNK905305R0000	50	3.50
		10 poles	32 A (IEC)		JB5-10	1SNK905310R0000	30	7.10
		50 poles	32 A (IEC)		JB5-50	1SNK905350R0000	10	36.00
2	Test adapters	For test plugs DIA 2 mm 0.079 in		Dark grey	TP2	1SNK900203R0000	20	1.70
		For test plugs DIA 4 mm 0.157 in			TP4	1SNK900205R0000	20	2.40
3	Test connectors	5.2 mm 0.205 in spacing		Dark grey	TC5	1SNK900200R0000	10	5.20
		End module, 5.2 mm 0.205 in			TC5-R1	1SNK900201R0000	10	5.20
4	Locking devices	9.4 mm 0.370 in spacing		Black	VR-ZD	1SNK900637R0000	50	0.7
5	Strain Relief			Dark grey	PT-ZD	1SNK900660R0000	50	1.04
6	Terminal block markers	Blank card		White	MC512	1SNK140000R0000	22	9.00
					MC512PA	1SNK149999R0000	20	10.00
		Blank strip label			MG-CPMFA 43196	1SNB043196R0012	400	2.562
		Blank marker			MG-CPM 13 41790	1SNB041790R0512	1960	0.236
		Universal wire markers holder		Grey	UMH	1SNK900611R0000	10	0.20

Complete list of accessories is indicated in the terminal block datasheet including end stops.
Some accessories such as jumper bars may modify the terminal block's ratings: Complete information available in the accessories section of the catalog.

Technical data valid for copper conductors only.

1SNK164031S0201

CDK2.5-2P-J PI-Spring female plugs

Female plug - 5.2 mm 0.205 in spacing

2.5 mm²
12 AWG

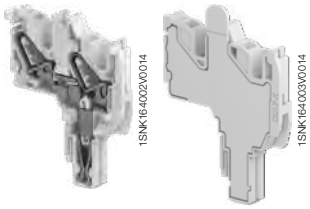

CDK2.5-2P-J CDK2.5-2P-J-E

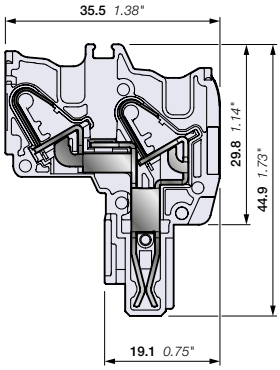

5.2 mm 0.205 in spacing

Description

- Create your own female plug assemblies without any special tools, easily snap together multiple plugs for optimal ergonomics and quick assembly,
- Increase your flexibility: eliminate stock of pre-configured female plugs, easily add an extra plug in case of needed modification,
- Reduce your stock of unitary plugs up to 30%: only two plug variants are required to compose your own subsets of plugs from 2 to 15 poles.

Description	Color	Type	Part Number	Pkg qty	Weight (1 pce) g
Female plugs	Grey	CDK2.5-2P-J	1SNK805740R0000	50	5.37
	Blue	CDK2.5-2P-J-BL	1SNK805746R0000	50	5.37
	Green-yellow	CDK2.5-2P-J-PE	1SNK805751R0000	50	5.37
Female plugs without outer nubs - Closed	Grey	CDK2.5-2P-J-E	1SNK805741R0000	50	5.74
	Blue	CDK2.5-2P-J-BL-E	1SNK805747R0000	50	5.74
	Green-yellow	CDK2.5-2P-J-PE-E	1SNK805752R0000	50	5.74

Main technical data

Connecting capacity		IEC	UL - CSA
1 conductor per clamp	Rigid: Solid/Stranded	0.2 ... 4 mm²	26 ... 12 AWG
	Flexible without ferrule	0.22 ... 2.5 mm²	
	Flexible with non insulated ferrule	0.22 ... 2.5 mm²	26 ... 14 AWG
	Flexible with insulated ferrule	0.22 ... 2.5 mm²	26 ... 14 AWG
2 conductors per clamp	Flexible with twin ferrule	0.22 ... 0.5 mm²	26 ... 20 AWG
Rated current / Rated cross section		24 A / 2.5 mm²	20 A / 12 AWG
Rated short-time withstand current (1s)		300 A	
Rated voltage		500 V	600 V
Impulse withstand voltage		6000 V	
Protection		IP20	NEMA 1

Mounting instructions

Rail		
Wire stripping length		11 mm 0.433 in
Tool (for flexible conductor without ferrule)		Flat screwdriver Ø 3.5 mm Ø 0.138 in

The connecting capacity data for one Rigid: Solid/Stranded, or one Flexible conductor (when applicable) is a mandatory information required by IEC, UL and CSA standards (Copper conductors). All other data are provided as supplementary information only. For more details, please consult our CB, UL or CSA certificates and technical datasheet available on http://www.TE.com

CE CB RoHS USR CNR CSA EAC BV

Mounting instructions

15 poles max.

Accessories

	Description			Color	Type	Part Number	Pkg qty	Weight (1 pce) g
1	**Jumper bars**	2 poles	32 A (IEC)	Orange	JB5-2	1SNK905302R0000	50	1.30
		3 poles	32 A (IEC)		JB5-3	1SNK905303R0000	50	2.00
		4 poles	32 A (IEC)		JB5-4	1SNK905304R0000	50	2.70
		5 poles	32 A (IEC)		JB5-5	1SNK905305R0000	50	3.50
		10 poles	32 A (IEC)		JB5-10	1SNK905310R0000	30	7.10
		50 poles	32 A (IEC)		JB5-50	1SNK905350R0000	10	36.00
2	**Test adapters**	For test plugs DIA 2 mm 0.079 in		Dark grey	TP2	1SNK900203R0000	20	1.70
		For test plugs DIA 4 mm 0.157 in			TP4	1SNK900205R0000	20	2.40
3	**Test connectors**	5.2 mm 0.205 in spacing		Dark grey	TC5	1SNK900200R0000	10	5.20
		End module, 5.2 mm 0.205 in			TC5-R1	1SNK900201R0000	10	5.20
4	**Locking devices**	9.4 mm 0.370 in spacing		Black	VR-ZD	1SNK900637R0000	50	0.7
5	**Strain Relief**			Dark grey	PT-ZD	1SNK900660R0000	50	1.04
6	**Terminal block markers**	Blank card		White	MC512	1SNK140000R0000	22	9.00
					MC512PA	1SNK149999R0000	20	10.00
		Blank strip label			MG-CPMFA 43196	1SNB043196R0012	400	2.562
		Blank marker			MG-CPM 13 41790	1SNB041790R0512	1960	0.236
		Universal wire markers holder		Grey	UMH	1SNK900611R0000	10	0.20

Complete list of accessories is indicated in the terminal block datasheet including end stops.
Some accessories such as jumper bars may modify the terminal block's ratings: Complete information available in the accessories section of the catalog.

Technical data valid for copper conductors only.

1SNK164032S0201

CDK4 PI-Spring female plugs

Female plug - 6 mm 0.236 in spacing

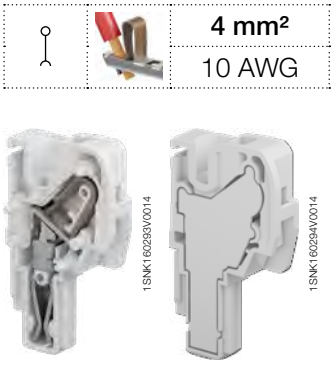

CDK4 CDK4-E

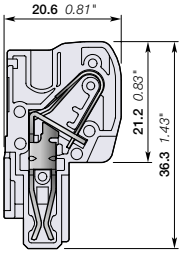

6 mm 0.236 in spacing

	4 mm²
	10 AWG

Description

- Create your own female plug assemblies without any special tools, easily snap together multiple plugs for optimal ergonomics and quick assembly,
- Increase your flexibility: eliminate stock of pre-configured female plugs, easily add an extra plug in case of needed modification,
- Reduce your stock of unitary plugs up to 30%: only two plug variants are required to compose your own subsets of plugs from 2 to 15 poles.

Ordering details

Description	Color	Type	Part Number		Pkg qty	Weight (1 pce) g
Female plugs	Grey	CDK4	1SNK806712R0000		50	3.80
Female plugs without outer nubs - Closed		CDK4-E	1SNK806713R0000		50	4.50

Main technical data

Connecting capacity		IEC	UL - CSA
1 conductor per clamp	Rigid: Solid/Stranded	0.5 ... 6 mm²	26 ... 10 AWG
	Flexible without ferrule	0.5 ... 4 mm²	
	Flexible with non insulated ferrule	0.5 ... 4 mm²	26 ... 12 AWG
	Flexible with insulated ferrule	0.5 ... 4 mm²	26 ... 12 AWG
2 conductors per clamp	Flexible with twin ferrule	0.5 ... 1 mm²	26 ... 18 AWG
Rated current / Rated cross section		30 A / 4 mm²	30 A / 10 AWG
Rated short-time withstand current (1s)		480 A	
Rated voltage		1000 V	600 V
Impulse withstand voltage		8000 V	
Protection		IP20	NEMA 1

Mounting instructions

Rail		
Wire stripping length		12.5 mm 0.492 in
Tool (for flexible conductor without ferrule)		Flat screwdriver Ø 3.5 mm Ø 0.138 in

The connecting capacity data for one Rigid: Solid/Stranded, or one Flexible conductor (when applicable) is a mandatory information required by IEC, UL and CSA standards (Copper conductors). All other data are provided as supplementary information only. For more details, please consult our CB, UL or CSA certificates and technical datasheet available on http://www.TE.com

CE CB RoHS USR CNR CSA EAC BV

Mounting instructions

15 poles max.

Accessories

	Description		Color	Type	Part Number		Pkg qty	Weight (1 pce) g
1	**Locking devices**	9.4 mm 0.370 in spacing	Black	VR-ZD	1SNK900637R0000		50	0.7
2	**Cable Clamp**	9.4 mm 0.370 in spacing	Dark grey	PT-ZD	1SNK900660R0000		50	1.04
3	**Terminal block markers**	Blank marker	White	MG-CPM 13 41791	1SNB041791R0612		1680	0.27
		Blank strip label		MG-CPMFA 43196	1SNB043196R0012		350	2.56
		Blank card		MC612	1SNK150000R0000		22	10.00
				MC612PA	1SNK159999R0000		20	11.00
		Universal wire markers holder	Grey	UMH	1SNK900611R0000		10	0.20

Complete list of accessories is indicated in the terminal block datasheet including end stops.
Some accessories such as jumper bars may modify the terminal block's ratings: Complete information available in the accessories section of the catalog.

1SNK164006S0201

Technical data valid for copper conductors only.

Screw clamp Pluggable

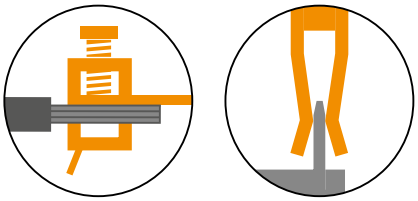

PB-189

ZDS4-22 Screw clamp pluggable terminal blocks

Feed-through - 5.2 mm 0.205 in spacing

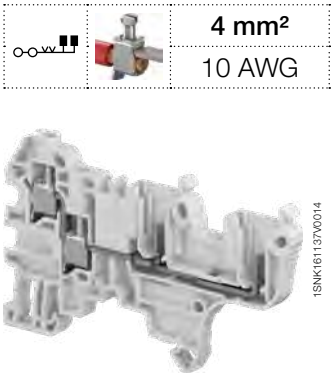

1SNK161137V0014

ZDS4-22

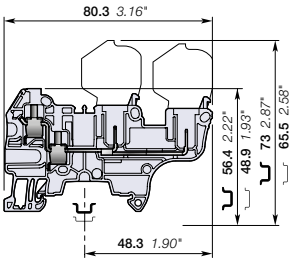

5.2 mm 0.205 in spacing

4 mm²
10 AWG

Description

- Increase your productivity with pluggable terminal blocks: possibility of pre-produced plugs harnesses, time saving plug and play assembly, reduced transportation panels preparation and final installation, easily connect sub-assemblies together,
- Simplify and secure your installation: in site faulty connection errors are eliminated, prior connection testing is eased and reliable, test connectors (TC5) withstanding 10 000 operations are compatible for convenient testing.

Ordering details

Description		Color	Type	Part Number		Pkg qty	Weight (1 pce) g
Feed-through	4 connections	Grey	ZDS4-22	1SNK805013R0000		50	10.80

Main technical data

Connecting capacity		IEC	UL - CSA
1 conductor per clamp	Rigid: Solid/Stranded	0.2 ... 4 mm²	24 ... 10 AWG
	Flexible without ferrule	0.22 ... 4 mm²	
	Flexible with non insulated ferrule	0.22 ... 4 mm²	24 ... 10 AWG
	Flexible with insulated ferrule	0.22 ... 2.5 mm²	24 ... 12 AWG
	Gauge	A3-B3	
2 conductors per clamp	Rigid: Solid/Stranded	0.2 ... 1.5 mm²	24 ... 16 AWG
	Flexible without ferrule	0.22 ... 1.5 mm²	
	Flexible with twin ferrule	0.22 ... 1.5 mm²	24 ... 16 AWG
Rated current / Rated cross section		29 A / 4 mm²	28 A / 10 AWG
Rated short-time withstand current (1s)		480 A	
Rated voltage		800 V	300 V
Impulse withstand voltage		8000 V	
Protection		IP20	NEMA 1

Mounting instructions

Rail	TH 35-7.5, TH 35-15
Wire stripping length	10.5 mm 0.413 in
Tool	Flat screwdriver Ø 3.5 mm Ø 0.138 in
Torque	0.6 Nm ± 0.1 5.31 lb.in ± 0.885

The connecting capacity data for one Rigid: Solid/Stranded, or one Flexible conductor (when applicable) is a mandatory information required by IEC, UL and CSA standards (Copper conductors). All other data are provided as supplementary information only. For more details, please consult our CB, UL or CSA certificates and technical datasheet available on http://www.TE.com

CE CB RoHS USR CNR CSA EAC BV

CDS4 CDS4-E

Female plugs

Description		Color	Type	Part Number		Pkg qty	Weight (1 pce) g
Female plugs	1 pole	Grey	CDS4	1SNK805714R0000		50	3.90
Female plugs without outer nubs - Closed			CDS4-E	1SNK805715R0000		50	4.10

15 poles max.

Accessories

	Description			Color	Type	Part Number		Pkg qty	Weight (1 pce) g
1	**End stops**	10 mm	0.394 in	Dark grey	BAM4	1SNK900001R0000		50	14.00
2	**End sections**	0.8 mm	0.031 in	Dark grey	EDS4-22	1SNK805911R0000		20	1.85
3	**Jumper bars**	2 poles	32 A (IEC)	Orange	JB5-2	1SNK905302R0000		50	1.30
		3 poles	32 A (IEC)		JB5-3	1SNK905303R0000		50	2.00
		4 poles	32 A (IEC)		JB5-4	1SNK905304R0000		50	2.70
		5 poles	32 A (IEC)		JB5-5	1SNK905305R0000		50	3.50
		10 poles	32 A (IEC)		JB5-10	1SNK905310R0000		30	7.10
		50 poles	32 A (IEC)		JB5-50	1SNK905350R0000		10	36.00
4	**Circuit separators**	3 mm	0.118 in	Dark grey	CS-R3	1SNK900107R0000		20	6.40
5	**Test adapters**	For test plugs DIA 2 mm 0.079 in		Dark grey	TP2	1SNK900203R0000		20	1.70
		For test plugs DIA 4 mm 0.157 in			TP4	1SNK900205R0000		20	2.40
6	**Test connectors**	5.2 mm 0.205 in spacing		Dark grey	TC5	1SNK900200R0000		10	5.20
		End module, 5.2 mm 0.205 in			TC5-R1	1SNK900201R0000		10	5.20
7	**Coding pegs**			Dark grey	COP-ZD	1SNK900636R0000		10	3.57
8	**Terminal block markers**	Blank marker		White	MG-CPM 13 41790	1SNB041790R0512		1960	0.23
		Blank card			MC512	1SNK140000R0000		22	9.00
					MC512PA	1SNK149999R0000		20	10.00
		Universal wire markers holder		Grey	UMH	1SNK900611R0000		10	0.20

Complete list of accessories is indicated in the terminal block datasheet including end stops.
Some accessories such as jumper bars may modify the terminal block's ratings: Complete information available in the accessories section of the catalog.

Technical data valid for copper conductors only.

1SNK164003S0201

CDS4 Screw clamp female plugs

Female plug - 5.2 mm 0.205 in spacing

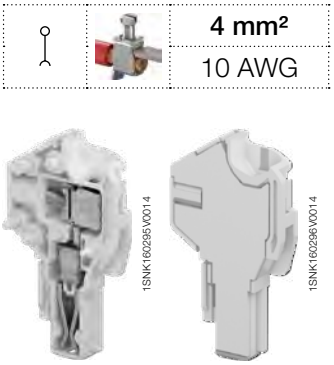

CDS4 CDS4-E

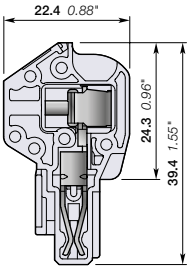

5.2 mm 0.205 in spacing

4 mm²	
10 AWG	

Description

- Create your own female plug assemblies without any special tools, easily snap together multiple plugs for optimal ergonomics and quick assembly,
- Increase your flexibility: eliminate stock of pre-configured female plugs, easily add an extra plug in case of needed modification,
- Reduce your stock of unitary plugs up to 30%: only two plug variants are required to compose your own subsets of plugs from 2 to 15 poles.

Ordering details

Description	Color	Type	Part Number		Pkg qty	Weight (1 pce) g
Female plugs	Grey	CDS4	1SNK805714R0000		50	3.90
Female plugs without outer nubs - Closed		CDS4-E	1SNK805715R0000		50	4.10

Main technical data

Connecting capacity		IEC	UL - CSA
1 conductor per clamp	Rigid: Solid/Stranded	0.2 ... 4 mm²	24 ... 10 AWG
	Flexible without ferrule	0.22 ... 4 mm²	
	Flexible with non insulated ferrule	0.22 ... 4 mm²	24 ... 10 AWG
	Flexible with insulated ferrule	0.22 ... 2.5 mm²	24 ... 12 AWG
	Gauge	A3-B3	
2 conductors per clamp	Rigid: Solid/Stranded	0.2 ... 1.5 mm²	24 ... 16 AWG
	Flexible without ferrule	0.22 ... 1.5 mm²	
	Flexible with twin ferrule	0.22 ... 1.5 mm²	24 ... 16 AWG
Rated current / Rated cross section		29 A / 4 mm²	28 A / 10 AWG
Rated short-time withstand current (1s)		480 A	
Rated voltage		800 V	300 V
Impulse withstand voltage		8000 V	
Protection		IP20	NEMA 1

Mounting instructions

Rail		
Wire stripping length		10.5 mm 0.413 in
Tool		Flat screwdriver Ø 3.5 mm Ø 0.138 in
Torque		0.6 Nm ± 0.1 5.31 lb.in ± 0.885

The connecting capacity data for one Rigid: Solid/Stranded, or one Flexible conductor (when applicable) is a mandatory information required by IEC, UL and CSA standards (Copper conductors). All other data are provided as supplementary information only. For more details, please consult our CB, UL or CSA certificates and technical datasheet available on http://www.TE.com

CE CB RoHS USR CNR CSA EAC BV

Mounting instructions

15 poles max.

Accessories

	Description		Color	Type	Part Number		Pkg qty	Weight (1 pce) g
1	**Locking devices**	9.4 mm 0.370 in spacing	Black	VR-ZD	1SNK900637R0000		50	0.7
2	**Cable Clamp**	9.4 mm 0.370 in spacing	Dark grey	PT-ZD	1SNK900660R0000		50	1.04
3	**Terminal block markers**	Blank marker	White	MG-CPM 13 41790	1SNB041790R0512		1960	0.23
		Blank strip label		MG-CPMFA 43196	1SNB043196R0012		350	2.56
		Blank card		MC512	1SNK140000R0000		22	9.00
				MC512PA	1SNK149999R0000		20	10.00
		Universal wire markers holder	Grey	UMH	1SNK900611R0000		10	0.20

Complete list of accessories is indicated in the terminal block datasheet including end stops.
Some accessories such as jumper bars may modify the terminal block's ratings: Complete information available in the accessories section of the catalog.

Technical data valid for copper conductors only.

1SNK164007S0201

ZDS4-22-R1 Screw clamp pluggable terminal blocks

Feed-through - 6 mm 0.236 in spacing

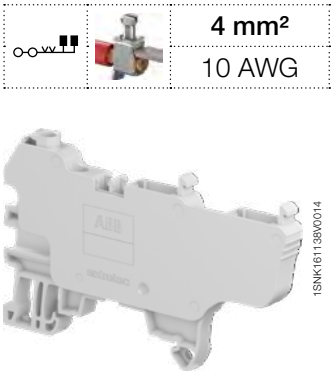

ZDS4-22-R1

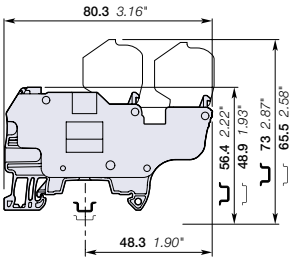

6 mm 0.236 in spacing

4 mm²
10 AWG

Description

- Increase your productivity with pluggable terminal blocks: possibility of pre-produced plugs harnesses, time saving plug and play assembly, reduced transportation panels preparation and final installation, easily connect sub-assemblies together,
- Simplify and secure your installation: in site faulty connection errors are eliminated, prior connection testing is eased and reliable, test connectors (TC5-R1 + ES-TC6) withstanding 10 000 operations are compatible for convenient testing.

Ordering details

Description		Color	Type	Part Number		Pkg qty	Weight (1 pce) g
Feed-through	4 connections	Grey	ZDS4-22-R1	1SNK806013R0000		40	12.60

Main technical data

Connecting capacity		IEC	UL - CSA
1 conductor per clamp	Rigid: Solid/Stranded	0.2 ... 4 mm²	24 ... 10 AWG
	Flexible without ferrule	0.22 ... 4 mm²	
	Flexible with non insulated ferrule	0.22 ... 4 mm²	24 ... 10 AWG
	Flexible with insulated ferrule	0.22 ... 4 mm²	24 ... 10 AWG
	Gauge	A3-B3	
2 conductors per clamp	Rigid: Solid/Stranded	0.2 ... 1.5 mm²	24 ... 16 AWG
	Flexible without ferrule	0.22 ... 1.5 mm²	
	Flexible with twin ferrule	0.22 ... 1.5 mm²	24 ... 16 AWG
Rated current / Rated cross section		29 A / 4 mm²	28 A / 10 AWG
Rated short-time withstand current (1s)		480 A	
Rated voltage		800 V	300 V
Impulse withstand voltage		8000 V	
Protection		IP20	NEMA 1

Mounting instructions

Rail	TH 35-7.5, TH 35-15
Wire stripping length	10.5 mm 0.413 in
Tool	Flat screwdriver Ø 3.5 mm Ø 0.138 in
Torque	0.6 Nm ± 0.1 5.31 lb.in ± 0.885

The connecting capacity data for one Rigid: Solid/Stranded, or one Flexible conductor (when applicable) is a mandatory information required by IEC, UL and CSA standards (Copper conductors). All other data are provided as supplementary information only. For more details, please consult our CB, UL or CSA certificates and technical datasheet available on http://www.TE.com

CE CB RoHS USR CNR CSA EAC BV

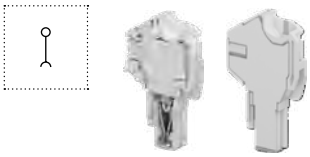

CDS4-R1 CDS4-E

Female plugs

Description		Color	Type	Part Number		Pkg qty	Weight (1 pce) g
Female plugs	1 pole	Grey	CDS4-R1	1SNK806714R0000		50	4.10
Female plugs without outer nubs - Closed			CDS4-E	1SNK805715R0000		50	4.10

15 poles max.

Accessories

	Description			Color	Type	Part Number		Pkg qty	Weight (1 pce) g
1	**End stops**	10 mm	0.394 in	Dark grey	BAM4	1SNK900001R0000		50	14.00
2	**Jumper bars**	2 poles	41 A (IEC)	Orange	JB6-2	1SNK906302R0000		50	1.30
		3 poles	41 A (IEC)		JB6-3	1SNK906303R0000		50	2.10
		4 poles	41 A (IEC)		JB6-4	1SNK906304R0000		50	2.90
		5 poles	41 A (IEC)		JB6-5	1SNK906305R0000		50	3.60
		10 poles	41 A (IEC)		JB6-10	1SNK906310R0000		20	7.40
		50 poles	41 A (IEC)		JB6-50	1SNK906350R0000		10	38.10
3	**Circuit separators**	3 mm	0.118 in	Dark grey	CS-R3	1SNK900107R0000		20	6.40
4	**Test adapters**	For test plugs DIA 2 mm 0.079 in		Dark grey	TP2	1SNK900203R0000		20	1.70
		For test plugs DIA 4 mm 0.157 in			TP4	1SNK900205R0000		20	2.40
5	**Test connectors**	End module, 5.2 mm 0.205 in		Dark grey	TC5-R1	1SNK900201R0000		10	5.20
6	**Spacers**	0.8 mm	0.031 in	Dark grey	ES-TC6	1SNK900105R0000		10	0.80
7	**Coding pegs**			Dark grey	COP-ZD	1SNK900636R0000		10	3.57
8	**Terminal block markers**	Blank marker		White	MG-CPM 13 41791	1SNB041791R0612		1680	0.27
		Blank card			MC612	1SNK150000R0000		22	10.00
					MC612PA	1SNK159999R0000		20	11.00
		Universal wire markers holder		Grey	UMH	1SNK900611R0000		10	0.20

Complete list of accessories is indicated in the terminal block datasheet including end stops.
Some accessories such as jumper bars may modify the terminal block's ratings: Complete information available in the accessories section of the catalog.

Technical data valid for copper conductors only.

1SNK164004S0201

CDS4-R1 Screw clamp female plugs

Female plug - 6 mm 0.236 in spacing

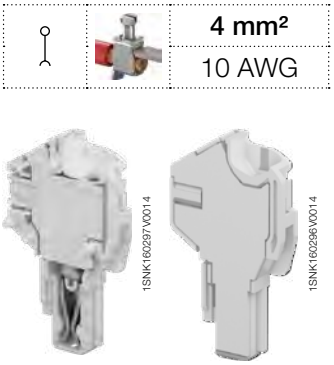

CDS4-R1 CDS4-E

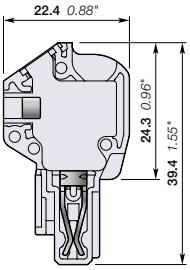

6 mm 0.236 in spacing

		4 mm²
		10 AWG

Description

- Create your own female plug assemblies without any special tools, easily snap together multiple plugs for optimal ergonomics and quick assembly,
- Increase your flexibility: eliminate stock of pre-configured female plugs, easily add an extra plug in case of needed modification,
- Reduce your stock of unitary plugs up to 30%: only two plug variants are required to compose your own subsets of plugs from 2 to 15 poles.

Ordering details

Description	Color	Type	Part Number		Pkg qty	Weight (1 pce) g
Female plugs	Grey	CDS4-R1	1SNK806714R0000		50	4.10
Female plugs without outer nubs - Closed		CDS4-E	1SNK805715R0000		50	4.10

Main technical data

Connecting capacity		IEC	UL - CSA
1 conductor per clamp	Rigid: Solid/Stranded	0.2 ... 4 mm²	24 ... 10 AWG
	Flexible without ferrule	0.22 ... 4 mm²	
	Flexible with non insulated ferrule	0.22 ... 4 mm²	24 ... 10 AWG
	Flexible with insulated ferrule	0.22 ... 4 mm²	24 ... 10 AWG
	Gauge	A3-B3	
2 conductors per clamp	Rigid: Solid/Stranded	0.2 ... 1.5 mm²	24 ... 16 AWG
	Flexible without ferrule	0.22 ... 1.5 mm²	
	Flexible with twin ferrule	0.22 ... 1.5 mm²	24 ... 16 AWG
Rated current / Rated cross section		29 A / 4 mm²	28 A / 10 AWG
Rated short-time withstand current (1s)		480 A	
Rated voltage		800 V	300 V
Impulse withstand voltage		8000 V	
Protection		IP20	NEMA 1

Mounting instructions

Rail		
Wire stripping length		10.5 mm 0.413 in
Tool		Flat screwdriver Ø 3.5 mm Ø 0.138 in
Torque		0.6 Nm ± 0.1 5.31 lb.in ± 0.885

The connecting capacity data for one Rigid: Solid/Stranded, or one Flexible conductor (when applicable) is a mandatory information required by IEC, UL and CSA standards (Copper conductors). All other data are provided as supplementary information only. For more details, please consult our CB, UL or CSA certificates and technical datasheet available on http://www.TE.com

CE CB RoHS USR CNR CSA EAC BV

Mounting instructions

15 poles max.

Accessories

	Description		Color	Type	Part Number		Pkg qty	Weight (1 pce) g
1	**Locking devices**	9.4 mm 0.370 in spacing	Black	VR-ZD	1SNK900637R0000		50	0.7
2	**Cable Clamp**	9.4 mm 0.370 in spacing	Dark grey	PT-ZD	1SNK900660R0000		50	1.04
3	**Terminal block markers**	Blank marker	White	MG-CPM 13 41791	1SNB041791R0612		1680	0.27
		Blank strip label		MG-CPMFA 43196	1SNB043196R0012		350	2.56
		Blank card		MC612	1SNK150000R0000		22	10.00
				MC612PA	1SNK159999R0000		20	11.00
		Universal wire markers holder	Grey	UMH	1SNK900611R0000		10	0.20

Complete list of accessories is indicated in the terminal block datasheet including end stops.
Some accessories such as jumper bars may modify the terminal block's ratings: Complete information available in the accessories section of the catalog.

1SNK164008S0201

Technical data valid for copper conductors only.

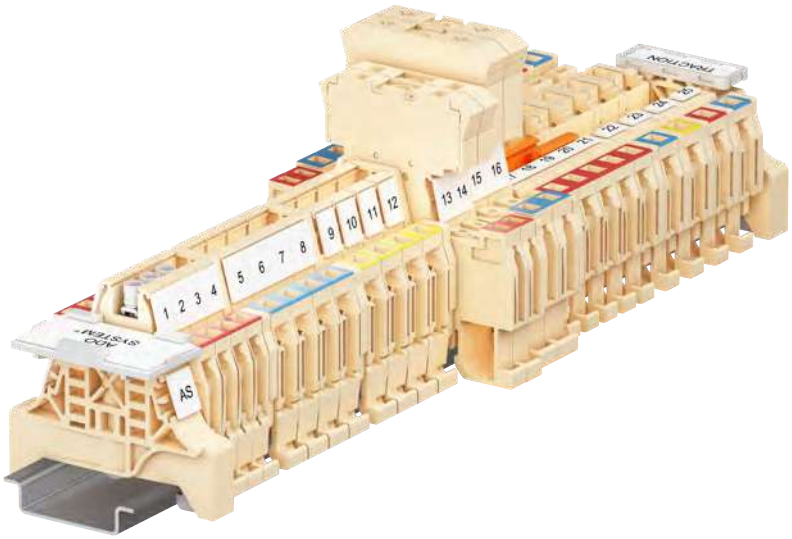
1 2 3 4
5 6 7 8
9 10 11 12
13 14 15 16
AS

Railway applications, terminal blocks
ADO System® IDC and pluggable technologies

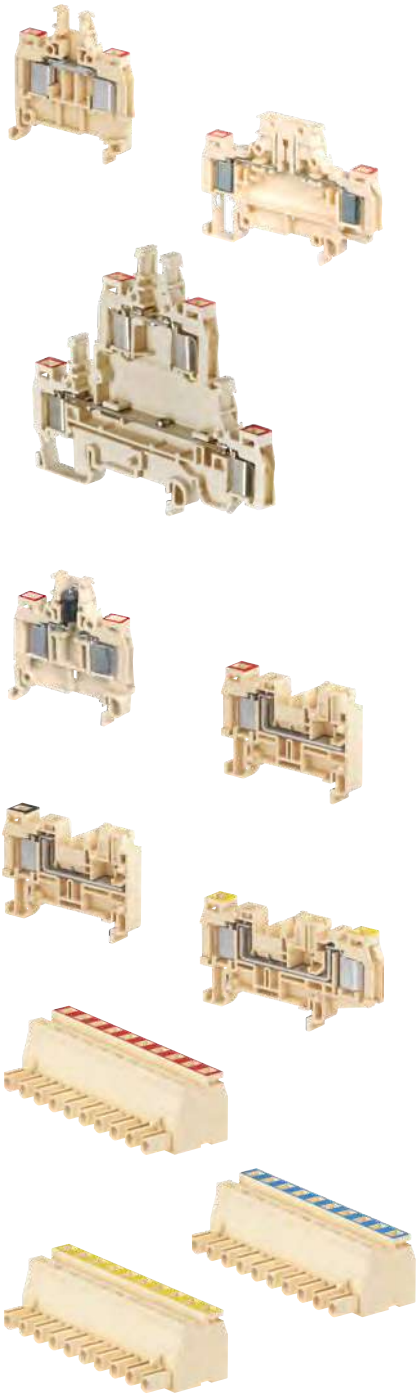

Technologies presentation			104
Overview			106

Feed-through

1.5 mm²	**D1.5/5.ADO.NF**		110
1.82 mm²	**D1.5/6.ADO.NF**		111
2.61 mm²	**D2.5/8.ADO.NF**		112
1.5 mm²	**D2.5/8.ADO.NF1**		113
4.32 mm²	**D4/8.ADO.NF**		114

Disconnect with plug

1.82 mm²	**D1.5/6.S.ADO.NF**		115
2.61 mm²	**D2.5/8.S.ADO.NF**		116

Double deck

1.82 mm²	**D1.5/6.D2.ADO.NF**		117

Component holder

1.82 mm²	**D1.5/6.ADO.D2.NF**		118

Pluggable

1.82 mm²	**D1.5/7.ADO-CPE.NF**	1x ADO system - 1x pluggable	119
1.5 mm²	**D2.5/7.ADO-CPE.NF1**	1x ADO system - 1x pluggable	120
1.82 mm²	**D1.5/7.2ADO-CPE.NF**	2x ADO system - 1x pluggable	121
2.61 mm²	**D2.5/7.ADO-CPE.NF**	1x ADO system - 1x pluggable	122
	D2.5/7.2ADO-CPE.NF	2x ADO system - 1x pluggable	123
4.32 mm²	**D4/7.ADO-CPE.NF**	1x ADO system - 1x pluggable	124
	D4/7.2ADO-CPE.NF	2x ADO system - 1x pluggable	125
	D2.5/7.2CPE	1x pluggable - 1x pluggable	126
	D2.5/7.2CPE.CPE	1x pluggable - 1x pluggable	127

Female plugs

1.82 mm²	**L 266 200 15**	2 to 10 poles	128
	L 266 200 25	2 to 10 poles-with brackets	129
	L 277 200 15	2 to 6 poles	130
2.61 mm²	**L 267 200 15**	2 to 10 poles	131
	L 267 200 25	2 to 10 poles	132
4.32 mm²	**L 276 200 15**	4 and 5 poles	133

Male plugs

1.82 mm²	**L 366 200 45**	2 to 10 poles	134
2.61 mm²	**L 367 200 45**	2 to 10 poles	135

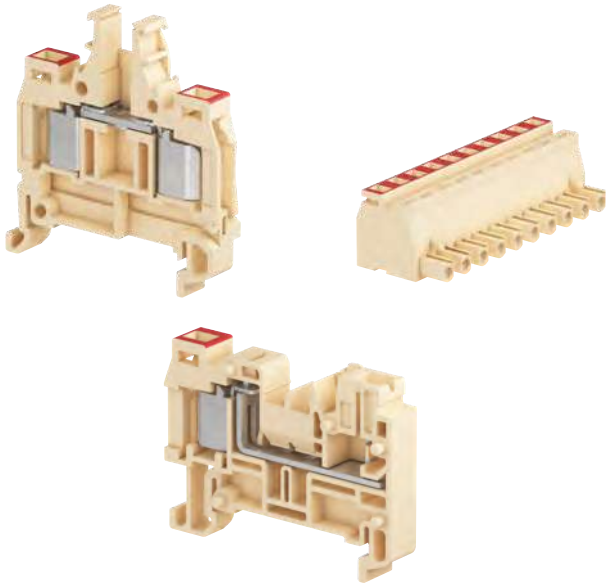

The fastest connection technology for rolling stock

The ADO system® technology based on insulation displacement (IDC) technology offers significant productivity savings as well as secure and reliable connection in case of vibration and shock.
Combined with the pluggable technology, it increases the productivity thanks to pre-produced plugs harnesses.

CE RoHS EAC

Reliable in harsh conditions

Continuous operation guaranteed for rolling stock

- Environmental tests: aging, corrosion, flammability, toxicity (I2F2, V0, HL3 R22)
- Mechanical tests: vibration and shock.

Cost effective solution

80% wiring time reduced compared to traditional technologies

- Asymmetrical design avoid mounting and wiring errors.
- Zero-retightening with our technologies.

Improve installation efficiency

Connection process simplified and secured

- Tool locked during the connection process
- Optimized wiring with pluggable technology
- Up to 2 conductors per ADO clamp.

1SNC167090S0201

Features

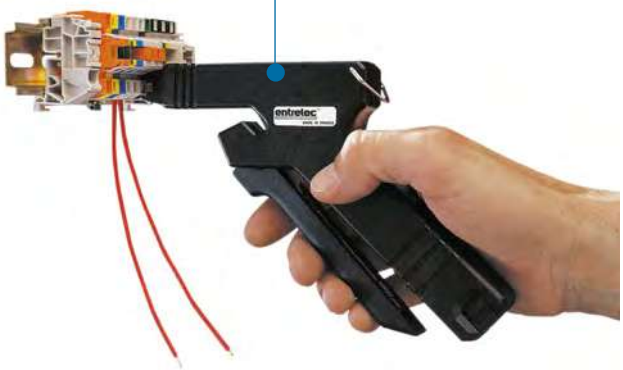

Tool not released until the connection to be completed

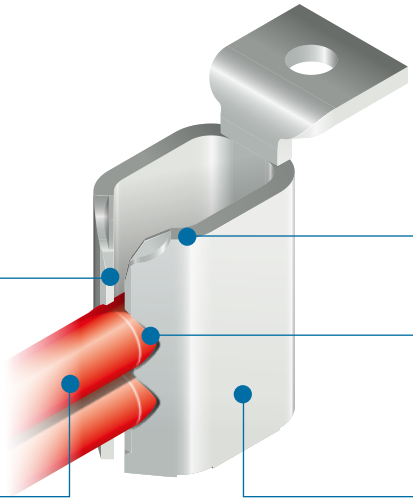

Contact lips: allows the electrical contact with a permanent cable contact pressure

Cone entry shape: allows the insulation cutting

Corrosion proof: contact points are wrapped by the insulation

First wire maintained in the clamp during the second wire cabling process

ADO System® jaw: "C shape" spring

1SNC167090S0201

Range overview from 1.5 mm² up to 4 mm² - 16 AWG up to 12 AWG

Feed-through
Red = 1.5 mm² / 16 AWG
Blue = 2.5 mm² / 14 AWG
Yellow = 4 mm² / 12 AWG

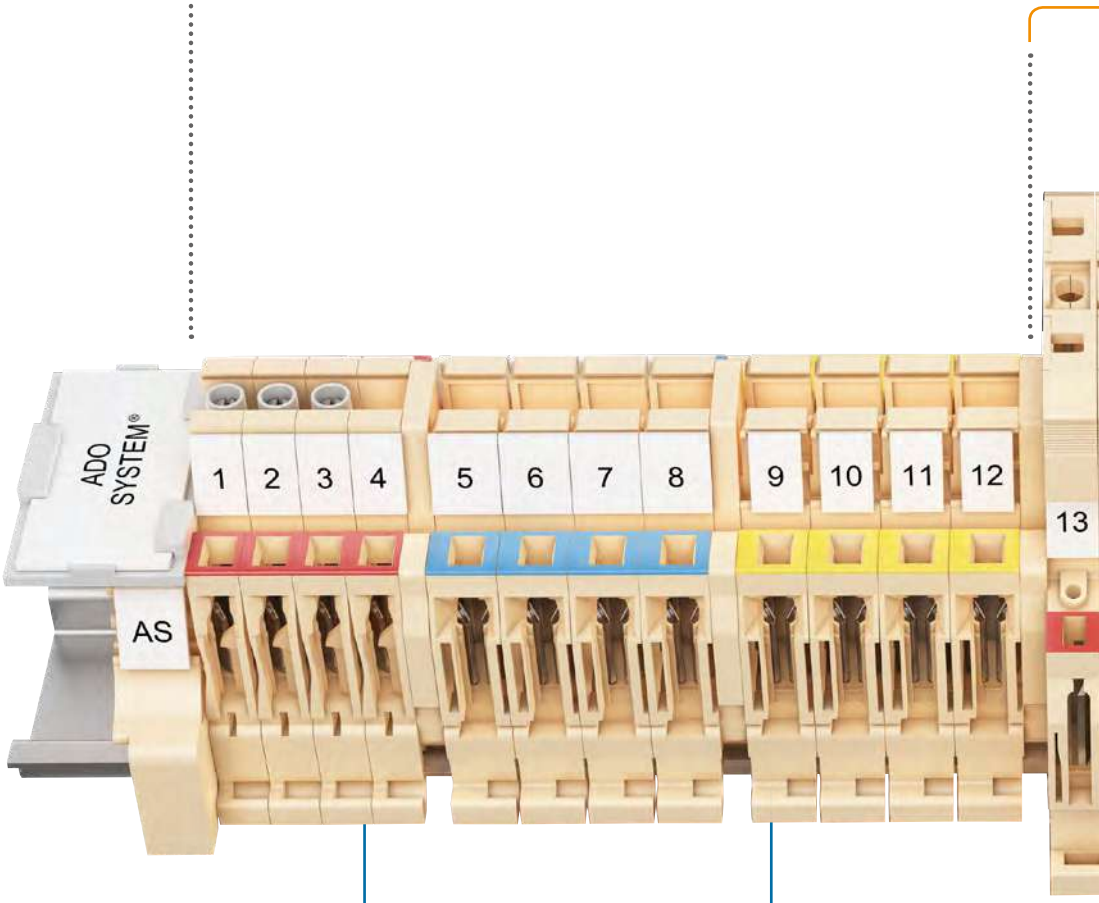

Specific color marking
Easy identification of the wire size

Connection of up to 2 wires
Save space by connecting
up to 2 conductors in 1 connection

Component holder
1.5 mm² / 16 AWG

Disconnect with plug
1.5 and 2.5 mm²
16 and 14 AWG

Pluggable
From 1.5 to 4 mm²
From 16 to 12 AWG

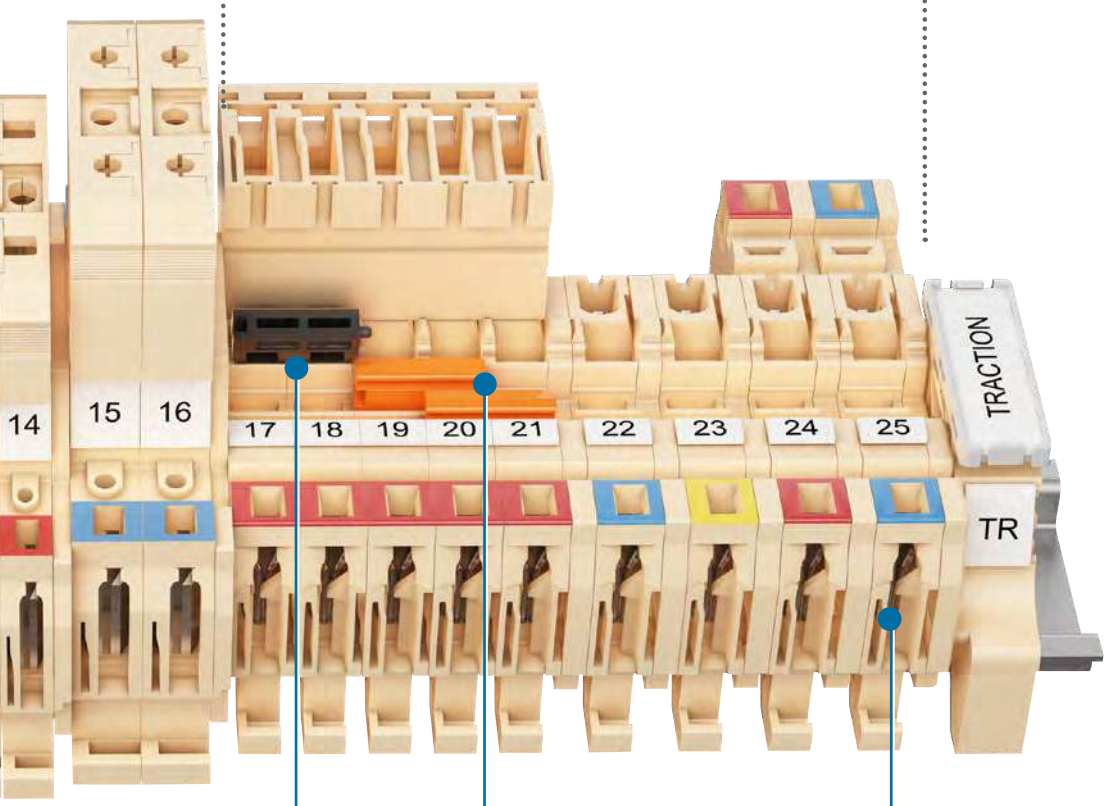

Locking lever
Secure against accidental wire pulling

Double jumper channel
Plug-in insulated jumpers

EN 50306 compatibility
The clamps are compatible with thin insulated conductors

1SNC167091S0201

	Feed-through				
Section					
1.5 mm²	D1.5/5.ADO.NF	D2.5/8.ADO.NF1			
1.82 mm²			D1.5/6.ADO.NF		
2.61 mm²				D2.5/8.ADO.NF	
4.32 mm²					D4/8.ADO.NF

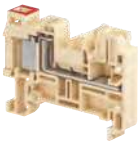
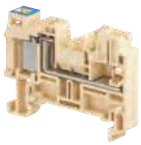
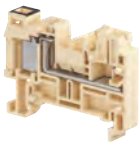
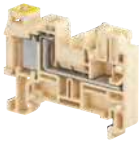

Pluggable	Feed-through: 1 ADO - 1 pluggable			
Section				
1.5 mm²		D2.5/7.ADO-CPE.NF1		
1.82 mm²	D1.5/7.ADO-CPE.NF			
2.61 mm²			D2.5/7.ADO-CPE.NF	
4.32 mm²				D4/7.ADO-CPE.NF

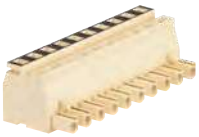

	Female plugs for pluggable terminal blocks			
Section				
1.5 mm²		L 277 200 15		
1.82 mm²	L 266 200 15 L 266 200 25			
2.61 mm²			L 267 200 15 L 267 200 25	
4.32 mm²				L 276 200 15

Clamp - Channels for jumpering or testing - Test socket - Blown-fuse indicator

Double deck	Disconnect with plug		Component holder
D1.5/6.D2.ADO.NF	D1.5/6.S.ADO.NF		D1.5/6.ADO.D2.NF
		D2.5/8.S.ADO.NF	

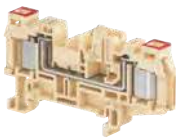
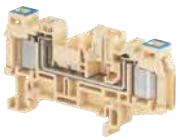
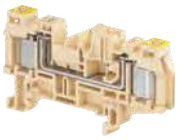
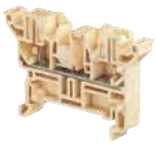
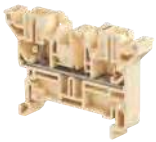

Feed-through: 2 ADO - 1 pluggable			Feed-through: 2 pluggables	
			D2.5/7.2CPE	D2.5/7.CPE.CPE
D1.5/7.2ADO-CPE.NF			D2.5/7.2CPE	D2.5/7.CPE.CPE
	D2.5/7.2ADO-CPE.NF		D2.5/7.2CPE	D2.5/7.CPE.CPE
		D4/7.2ADO-CPE.NF	D2.5/7.2CPE	D2.5/7.CPE.CPE

Male plugs	
L 366 200 45	
	L 367 200 45

1SNC167092S0201

D1.5/5.ADO.NF IDC terminal blocks

Feed-through - ADO System® - 5 mm 0.197 in spacing

1.5 mm²

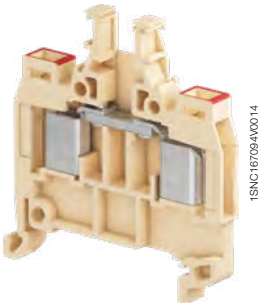

D1.5/5.ADO.NF

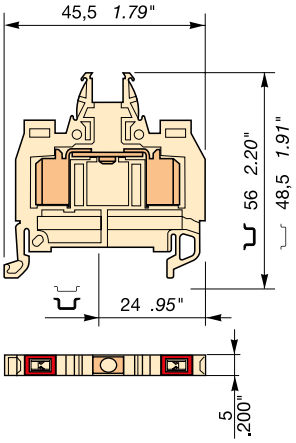

5 mm 0.197 in spacing

Description

- With the TE Connectivity ADO System®, experience the fastest and most reliable connection on the market,
- Designed for rolling stock applications exposed to severe constrains (vibrations, shocks etc.),
- Up to 2 wires per connection,
- Red marking to identify wire size.

Ordering details

Description	Color	Type	Part Numbers		Pkg qty	Weight (1 pce) g
Feed-through	Beige	D1.5/5.ADO.NF	1SNA400315R0100		50	5.00

Main technical data

Connecting capacity		NF F 63-808	NF F 63-296 NF F 63-826	EN 50306
ADO	Flexible without ferrule	0.6 ... 1.34 mm²		0.5 ... 1.5 mm²

	IEC	NF F 61-017
Rated current	17.5 A	16 A
Rated short-time withstand current (1s)	180 A	
Rated voltage	1000 V	500 V
Impulse withstand voltage	8000 V	
Protection	IP20	

CE RoHS EAC

Mounting instructions

Rail		TH 35-7.5, TH 35-15
Tool		ADO system tool

Accessories

	Description			Color	Type	Part Numbers		Pkg qty	Weight (1 pce) g
1	End stops	10 mm	0.394 in	Beige	BAM2	1SNA296351R0000		50	12.00
2	End sections	3 mm	0.118 in	Beige	FEMAD3	1SNA399802R0500		20	2.50
3	Jumper bars	2 poles	24 A (IEC)		BJMI5-2	1SNA176278R1600		10	3.30
		3 poles	24 A (IEC)		BJMI5-3	1SNA176279R1700		10	5.00
		4 poles	24 A (IEC)		BJMI5-4	1SNA176280R0500		10	6.70
		5 poles	24 A (IEC)		BJMI5-5	1SNA176281R2200		10	8.40
		10 poles	24 A (IEC)		BJMI5-10	1SNA176282R2300		10	16.90
4	Circuit separators	0 mm	0 in	Grey	SCAD5	1SNA199551R2000		10	0.30
5	Test sockets	DIA 2 mm 0.079 in			AL2	1SNA163043R2100		50	0.90
		DIA 3 mm 0.120 in			AL3	1SNA163261R0000		50	1.20
6	Test plugs	DIA 2 mm 0.079 in		Black	FC2	1SNA007865R2600		100	2.00
7	Shield connectors				CBM5	1SNA178745R1400		50	1
					CBM8	1SNA178746R1500		50	1
8	Tools	Semi automatic tool			OUPAD	1SNA178944R0400		1	205.00
		Hand tool			OUMAD	1SNA179466R0600		1	29.00
9	Terminal block markers	Blank card		White	RC510	1SNA231000R0700		10	5.20
					RC55	1SNA230000R1200		10	2.90

1SNC167072S0201

D1.5/6.ADO.NF IDC terminal blocks

Feed-through - ADO System® - 6 mm 0.236 in spacing

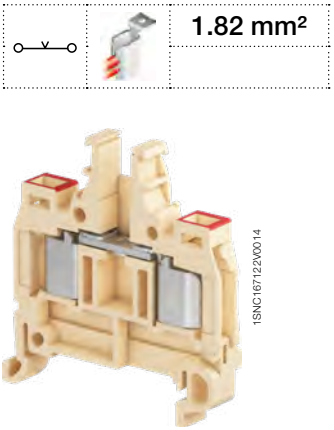

D1.5/6.ADO.NF

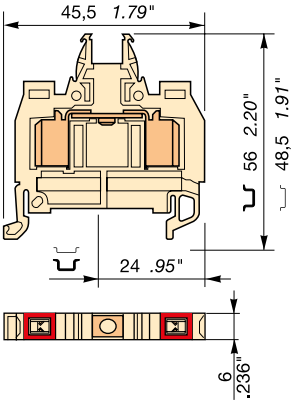

6 mm 0.236 in spacing

Description

- With the TE Connectivity ADO System®, experience the fastest and most reliable connection on the market,
- Designed for rolling stock applications exposed to severe constrains (vibrations, shocks etc.),
- Up to 2 wires per connection,
- Red marking to identify wire size.

Ordering details

Description	Color	Type	Part Numbers		Pkg qty	Weight (1 pce) g
Feed-through	Beige	D1.5/6.ADO.NF	1SNA399730R1700		50	6.00

Main technical data

Connecting capacity		NF F 63-808	NF F 63-296 NF F 63-826	EN 50306
ADO	Flexible without ferrule	0.6 ... 1.82 mm²		0.5 ... 1.5 mm²

	IEC	NF F 61-017
Rated current	17.5 A	16 A
Rated short-time withstand current (1s)	180 A	
Rated voltage	1000 V	500 V
Impulse withstand voltage	8000 V	
Protection	IP20	

Mounting instructions

Rail		TH 35-7.5, TH 35-15
Tool		ADO system tool

CE RoHS EAC

Accessories

	Description			Color	Type	Part Numbers		Pkg qty	Weight (1 pce) g
1	End stops	10 mm	0.394 in	Beige	BAM2	1SNA296351R0000		50	12.00
2	End sections	3 mm	0.118 in	Beige	FEMAD3	1SNA399802R0500		20	2.50
3	Jumper bars	2 poles	32 A (IEC)		BJMI6-2	1SNA176663R0000		10	4.40
		3 poles	32 A (IEC)		BJMI6-3	1SNA176664R0100		10	6.70
		4 poles	32 A (IEC)		BJMI6-4	1SNA176665R0200		10	8.90
		5 poles	32 A (IEC)		BJMI6-5	1SNA176666R0300		10	11.20
		10 poles	32 A (IEC)		BJMI6-10	1SNA176667R0400		10	22.40
		20 poles	32 A (IEC)		BJS6-20	1SNA174784R2000		10	26.70
4	Cross spacing jumpers	2 poles	35 A (IEC)		EL6	1SNA173627R2100		10	0.10
5	Circuit separators	0 mm	0 in	Grey	SCAD	1SNA196896R0000		10	0.7
6	Test sockets	DIA 2 mm	0.079 in		AL2	1SNA163043R2100		50	0.90
		DIA 3 mm	0.120 in		AL3	1SNA163261R0000		50	1.20
7	Test plugs	DIA 2 mm	0.079 in	Black	FC2	1SNA007865R2600		100	2.00
8	Shield connectors				CBM5	1SNA178745R1400		50	1
					CBM8	1SNA178746R1500		50	1
9	Tools	Semi automatic tool			OUPAD	1SNA178944R0400		1	205.00
		Hand tool			OUMAD	1SNA179466R0600		1	29.00
10	Terminal block markers	Blank card		White	RC610	1SNA233000R0100		10	7.50
					RC65	1SNA232000R0000		10	3.60

1SNC167032S0201

D2.5/8.ADO.NF IDC terminal blocks

Feed-through - ADO System® - 8 mm 0.315 in spacing

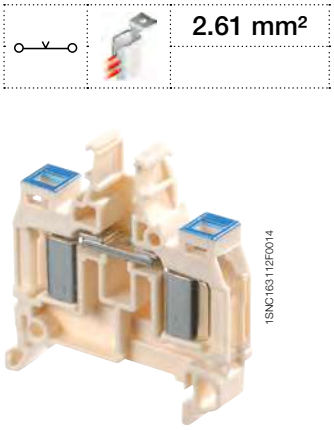

D2.5/8.ADO.NF

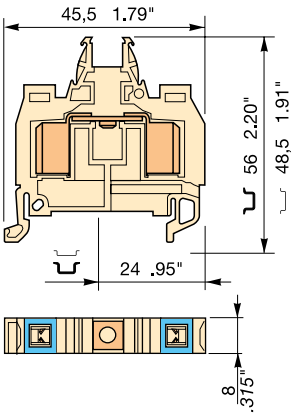

8 mm 0.315 in spacing

Description

- With the TE Connectivity ADO System®, experience the fastest and most reliable connection on the market,
- Designed for rolling stock applications exposed to severe constrains (vibrations, shocks etc.),
- Up to 2 wires per connection,
- Blue marking to identify wire size.

Ordering details

Description	Color	Type	Part Numbers		Pkg qty	Weight (1 pce) g
Feed-through	Beige	D2.5/8.ADO.NF	1SNA399736R0100		50	9.00

Main technical data

Connecting capacity		NF F 63-808	NF F 63-296 NF F 63-826	EN 50306
ADO	Flexible without ferrule	0.93 ... 2.61 mm²		1 ... 2.5 mm²

	IEC	NF F 61-017
Rated current	24 A	16 A
Rated short-time withstand current (1s)	300 A	
Rated voltage	1000 V	500 V
Impulse withstand voltage	8000 V	
Protection	IP20	

CE RoHS EAC

Mounting instructions

Rail		TH 35-7.5, TH 35-15
Tool		ADO system tool

Accessories

	Description			Color	Type	Part Numbers		Pkg qty	Weight (1 pce) g
1	End stops	10 mm	0.394 in	Beige	BAM2	1SNA296351R0000		50	12.00
2	End sections	3 mm	0.118 in	Beige	FEMAD3	1SNA399802R0500		20	2.50
3	Jumper bars	2 poles	41 A (IEC)		BJMI8-2	1SNA176669R1600		10	4.50
		3 poles	41 A (IEC)		BJMI8-3	1SNA176670R1300		10	6.00
		4 poles	41 A (IEC)		BJMI8-4	1SNA176671R0000		10	10.00
		5 poles	41 A (IEC)		BJMI8-5	1SNA176672R0100		10	12.20
		10 poles	41 A (IEC)		BJMI8-10	1SNA176673R0200		10	20.00
4	Cross spacing jumpers	2 poles	35 A (IEC)		EL6	1SNA173627R2100		10	0.10
5	Circuit separators	0 mm	0 in	Grey	SCAD	1SNA196896R0000		10	0.7
6	Test sockets	DIA 2 mm 0.079 in			AL2	1SNA163043R2100		50	0.90
		DIA 3 mm 0.120 in			AL3	1SNA163261R0000		50	1.20
7	Test plugs	DIA 2 mm 0.079 in		Black	FC2	1SNA007865R2600		100	2.00
		DIA 4 mm 0.157 in		White	FC4	1SNA167860R0100		10	10.00
8	Tools	Semi automatic tool			OUPAD	1SNA178944R0400		1	205.00
		Hand tool			OUMAD	1SNA179466R0600		1	29.00
9	Terminal block markers	Blank card		White	RC810	1SNA234000R0200		10	8.20

1SNC1670585S0201

D2.5/8.ADO.NF1 IDC terminal blocks

Feed-through - ADO System® - 8 mm 0.315 in spacing

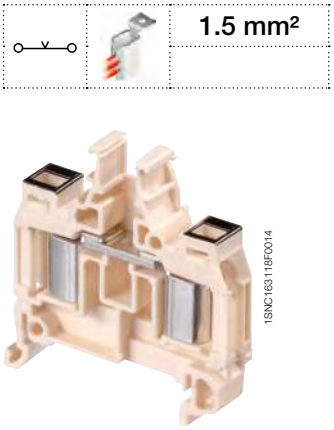

D2.5/8.ADO.NF1

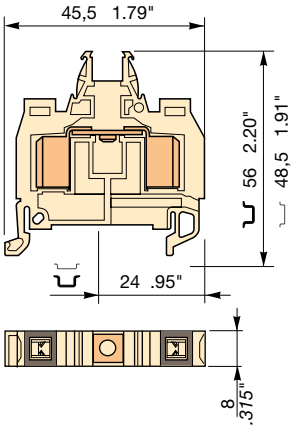

8 mm 0.315 in spacing

1.5 mm²

Description

- With the TE Connectivity ADO System®, experience the fastest and most reliable connection on the market,
- Designed for rolling stock applications exposed to severe constrains (vibrations, shocks etc.),
- Up to 2 wires per connection,
- Black marking to identify wire size.

Ordering details

Description	Color	Type	Part Numbers		Pkg qty	Weight (1 pce) g
Feed-through	Beige	D2.5/8.ADO.NF1	1SNA399749R2600		50	9.00

Main technical data

Connecting capacity		NF F 63-808	NF F 63-296 NF F 63-826	EN 50306
ADO	Flexible without ferrule		1.5 mm²	

	IEC	NF F 61-017
Rated current	24 A	16 A
Rated short-time withstand current (1s)	180 A	
Rated voltage	1000 V	500 V
Impulse withstand voltage	8000 V	
Protection	IP20	

Mounting instructions

Rail		TH 35-7.5, TH 35-15
Tool		ADO system tool

CE RoHS EAC

Accessories

	Description			Color	Type	Part Numbers		Pkg qty	Weight (1 pce) g
1	End stops	10 mm	0.394 in	Beige	BAM2	1SNA296351R0000		50	12.00
2	End sections	3 mm	0.118 in	Beige	FEMAD3	1SNA399802R0500		20	2.50
3	Jumper bars	2 poles	41 A (IEC)		BJMI8-2	1SNA176669R1600		10	4.50
		3 poles	41 A (IEC)		BJMI8-3	1SNA176670R1300		10	6.00
		4 poles	41 A (IEC)		BJMI8-4	1SNA176671R0000		10	10.00
		5 poles	41 A (IEC)		BJMI8-5	1SNA176672R0100		10	12.20
		10 poles	41 A (IEC)		BJMI8-10	1SNA176673R0200		10	20.00
4	Cross spacing jumpers	2 poles	35 A (IEC)		EL6	1SNA173627R2100		10	0.10
5	Circuit separators	0 mm	0 in	Grey	SCAD	1SNA196896R0000		10	0.7
6	Test sockets	DIA 2 mm	0.079 in		AL2	1SNA163043R2100		50	0.90
		DIA 3 mm	0.120 in		AL3	1SNA163261R0000		50	1.20
7	Test plugs	DIA 2 mm	0.079 in	Black	FC2	1SNA007865R2600		100	2.00
		DIA 4 mm	0.157 in	White	FC4	1SNA167860R0100		10	10.00
8	Tools	Semi automatic tool			OUPAD	1SNA178944R0400		1	205.00
		Hand tool			OUMAD	1SNA179466R0600		1	29.00
9	Terminal block markers	Blank card		White	RC810	1SNA234000R0200		10	8.20

1SNC167013S0201

D4/8.ADO.NF IDC terminal blocks

Feed-through - ADO System® - 8 mm 0.315 in spacing

4.32 mm²

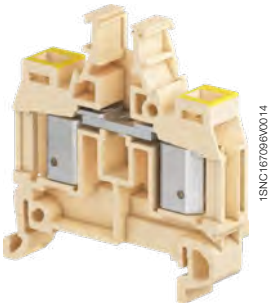

D4/8.ADO.NF

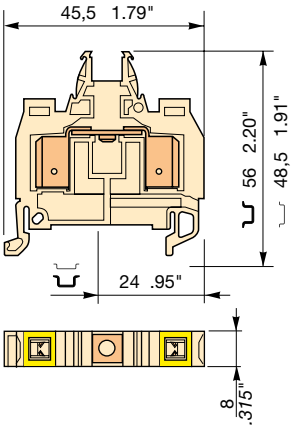

8 mm 0.315 in spacing

Description

- With the TE Connectivity ADO System®, experience the fastest and most reliable connection on the market,
- Designed for rolling stock applications exposed to severe constrains (vibrations, shocks etc.),
- Up to 2 wires per connection,
- Yellow marking to identify wire size.

Ordering details

Description	Color	Type	Part Numbers		Pkg qty	Weight (1 pce) g
Feed-through	Beige	D4/8.ADO.NF	1SNA399748R2500		50	9.00

Main technical data

Connecting capacity		NF F 63-808	NF F 63-296 NF F 63-826	EN 50306
ADO	Flexible without ferrule	4.32 mm²		

	IEC	NF F 61-017
Rated current	32 A	16 A
Rated short-time withstand current (1s)	480 A	
Rated voltage	1000 V	500 V
Impulse withstand voltage	8000 V	
Protection	IP20	

CE RoHS EAC

Mounting instructions

Rail		TH 35-7.5, TH 35-15
Tool		ADO system tool

Accessories

	Description			Color	Type	Part Numbers		Pkg qty	Weight (1 pce) g
1	End stops	10 mm	0.394 in	Beige	BAM2	1SNA296351R0000		50	12.00
2	End sections	3 mm	0.118 in	Beige	FEMAD3	1SNA399802R0500		20	2.50
3	Jumper bars	2 poles	41 A (IEC)		BJMI8-2	1SNA176669R1600		10	4.50
		3 poles	41 A (IEC)		BJMI8-3	1SNA176670R1300		10	6.00
		4 poles	41 A (IEC)		BJMI8-4	1SNA176671R0000		10	10.00
		5 poles	41 A (IEC)		BJMI8-5	1SNA176672R0100		10	12.20
		10 poles	41 A (IEC)		BJMI8-10	1SNA176673R0200		10	20.00
4	Cross spacing jumpers	2 poles	35 A (IEC)		EL6	1SNA173627R2100		10	0.10
5	Circuit separators	0 mm	0 in	Grey	SCAD	1SNA196896R0000		10	0.7
6	Test sockets	DIA 2 mm 0.079 in			AL2	1SNA163043R2100		50	0.90
		DIA 3 mm 0.120 in			AL3	1SNA163261R0000		50	1.20
7	Test plugs	DIA 2 mm 0.079 in		Black	FC2	1SNA007865R2600		100	2.00
		DIA 4 mm 0.157 in		White	FC4	1SNA167860R0100		10	10.00
8	Tools	Semi automatic tool			OUPAD	1SNA178944R0400		1	205.00
		Hand tool			OUMAD	1SNA179466R0600		1	29.00
9	Terminal block markers	Blank card		White	RC810	1SNA234000R0200		10	8.20

1SNC167062S0201

D1.5/6.S.ADO.NF IDC terminal blocks

Disconnect with plug - ADO System® - 6 mm 0.236 in spacing

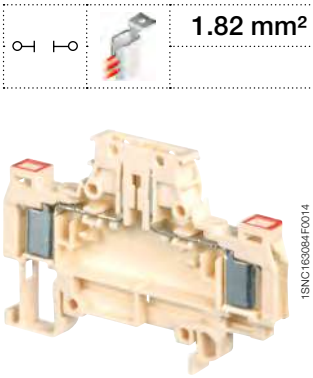

D1.5/6.S.ADO.NF

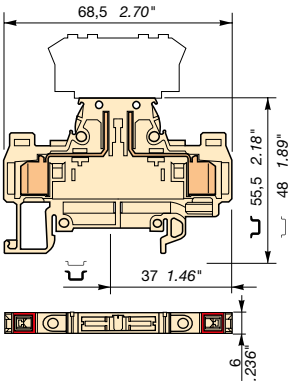

6 mm 0.236 in spacing

Description

- Ease your disconnect operations with the disconnect component holder plug,
- With the TE Connectivity ADO System®, experience the fastest and most reliable connection on the market,
- Designed for rolling stock applications exposed to severe constrains (vibrations, shocks etc.),
- Up to 2 wires per connection,
- Red marking to identify wire size.

Ordering details

Description		Color	Type	Part Numbers		Pkg qty	Weight (1 pce) g
Disconnect	With 2 test sockets DIA 2 mm 0.079 in	Beige	D1.5/6.S.ADO.NF	1SNA400083R2500		50	8.00

Main technical data

Connecting capacity		NF F 63-808	NF F 63-296 NF F 63-826	EN 50306
ADO	Flexible without ferrule	0.6 ... 1.82 mm²		0.5 ... 1.5 mm²

	IEC	NF F 61-017
Rated current	10 A	
Rated short-time withstand current (1s)	180 A	
Rated voltage	500 V	
Impulse withstand voltage	6000 V	
Protection	IP20	

Mounting instructions

Rail		TH 35-7.5, TH 35-15
Tool		ADO system tool

CE RoHS EAC

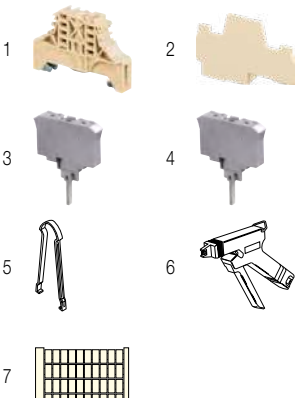

Accessories

	Description			Color	Type	Part Numbers		Pkg qty	Weight (1 pce) g
1	**End stops**	10 mm	0.394 in	Beige	BAM2	1SNA296351R0000		50	12.00
2	**End sections**	2 mm	0.079 in	Beige	FEDAD5	1SNA399804R0700		20	2.70
3	**Component plugs**	With solder leads and screws		Beige	BNSV62	1SNA196854R1500		50	6.00
					BNSV62-1	1SNA400142R0400		50	6.00
		For 5x20 and 5x25 fuses			BNF652	1SNA196998R1600		50	6.00
4	**Short circuit plugs**	Equipped with linking bar		Beige	BNC62	1SNA196853R1400		50	7.00
5	**Extraction tools**				EXBN2	1SNA171018R2000		1	
6	**Tools**	Semi automatic tool			OUPAD	1SNA178944R0400		1	205.00
		Hand tool			OUMAD	1SNA179466R0600		1	29.00
7	**Terminal block markers**	Blank card		White	RC610	1SNA233000R0100		10	7.50

1SNC167080S0201

D2.5/8.S.ADO.NF IDC terminal blocks

Disconnect with plug - ADO System® - 8 mm 0.315 in spacing

2.61 mm²

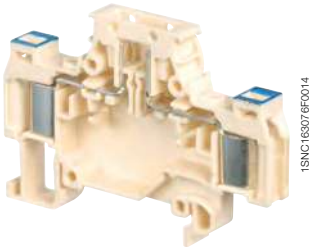

D2.5/8.S.ADO.NF

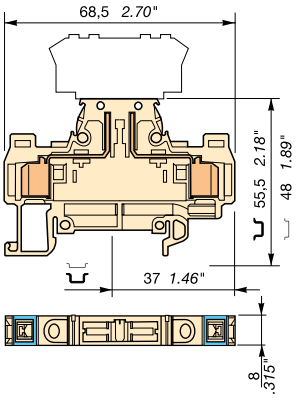

8 mm 0.315 in spacing

Description

- Ease your disconnect operations with the disconnect component holder plug,
- With the TE Connectivity ADO System®, experience the fastest and most reliable connection on the market,
- Designed for rolling stock applications exposed to severe constrains (vibrations, shocks etc.),
- Up to 2 wires per connection,
- Blue marking to identify wire size.

Ordering details

Description		Color	Type	Part Numbers		Pkg qty	Weight (1 pce) g
Disconnect	With 2 test sockets DIA 2 mm 0.079 in	Beige	D2.5/8.S.ADO.NF	1SNA399752R1100		50	11.00

Main technical data

Connecting capacity		NF F 63-808	NF F 63-296 NF F 63-826	EN 50306
ADO	Flexible without ferrule	0.93 ... 2.61 mm²		1 ... 2.5 mm²

	IEC	NF F 61-017
Rated current	15 A	
Rated short-time withstand current (1s)	300 A	
Rated voltage	500 V	
Impulse withstand voltage	6000 V	
Protection	IP20	

Mounting instructions

Rail		TH 35-7.5, TH 35-15
Tool		ADO system tool

CE RoHS EAC

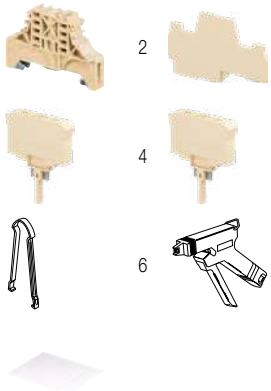

Accessories

	Description			Color	Type	Part Numbers		Pkg qty	Weight (1 pce) g
1	**End stops**	10 mm	0.394 in	Beige	BAM2	1SNA296351R0000		50	12.00
2	**End sections**	2 mm	0.079 in	Beige	FEDAD5	1SNA399804R0700		20	2.70
3	**Component plugs**	For 5x20 and 5x25 fuses		Beige	BNF52	1SNA196924R0300		50	8.00
		With solder leads and screws			BNSV82	1SNA196927R0600		50	8.00
4	**Short circuit plugs**	Equipped with linking bar		Beige	BNCT82	1SNA196926R0500		50	9.00
5	**Extraction tools**				EXBN2	1SNA171018R2000		1	
6	**Tools**	Semi automatic tool			OUPAD	1SNA178944R0400		1	205.00
		Hand tool			OUMAD	1SNA179466R0600		1	29.00
7	**Terminal block markers**	Blank card		White	RC810	1SNA234000R0200		10	8.20

1SNC167078S0201

D1.5/6.D2.ADO.NF IDC terminal blocks

Feed-through - ADO System® - 6 mm 0.236 in spacing

1.82 mm²

1SNC167149F0014

D1.5/6.D2.ADO.NF

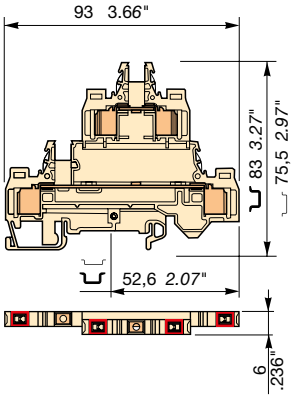

6 mm 0.236 in spacing

Description

- Save space with double deck terminal blocks: 2 independent circuits connected in just 6 mm 0.236 in spacing,
- With the TE Connectivity ADO System®, experience the fastest and most reliable connection on the market,
- Designed for rolling stock applications exposed to severe constrains (vibrations, shocks etc.),
- Up to 2 wires per connection,
- Red marking to identify wire size.

Ordering details

Description	Color	Type	Part Numbers		Pkg qty	Weight (1 pce) g
Feed-through	Beige	D1.5/6.D2.ADO.NF	1SNA399742R1700		50	18.00

Main technical data

Connecting capacity		NF F 63-808	NF F 63-296 NF F 63-826	EN 50306
ADO	Flexible without ferrule	0.6 ... 1.82 mm²		0.5 ... 1.5 mm²

	IEC	NF F 61-017
Rated current	17.5 A	16 A
Rated short-time withstand current (1s)	180 A	
Rated voltage	800 V	500 V
Impulse withstand voltage	6000 V	
Protection	IP20	

CE RoHS EAC

Mounting instructions

Rail		TH 35-7.5, TH 35-15
Tool		ADO system tool

Accessories

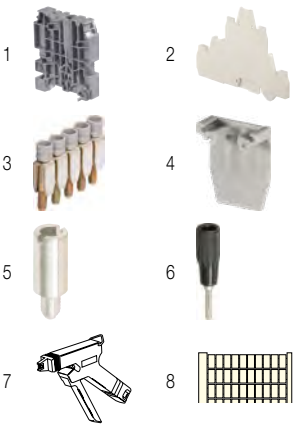

	Description			Color	Type	Part Numbers		Pkg qty	Weight (1 pce) g
1	End stops	12 mm	0.472 in	Grey	BADH	1SNA116900R2700		50	20.00
2	End sections	5 mm	0.197 in	Beige	FED2AD2	1SNA399803R0600		20	7.00
3	Jumper bars	2 poles	32 A (IEC)		BJMI6-2	1SNA176663R0000		10	4.40
		3 poles	32 A (IEC)		BJMI6-3	1SNA176664R0100		10	6.70
		4 poles	32 A (IEC)		BJMI6-4	1SNA176665R0200		10	8.90
		5 poles	32 A (IEC)		BJMI6-5	1SNA176666R0300		10	11.20
		10 poles	32 A (IEC)		BJMI6-10	1SNA176667R0400		10	22.40
		20 poles	32 A (IEC)		BJS6-20	1SNA174784R2000		10	26.70
4	Circuit separators	0 mm	0 in	Grey	SCAD	1SNA196896R0000		10	0.7
5	Test sockets	DIA 2 mm	0.079 in		AL2	1SNA163043R2100		50	0.90
		DIA 3 mm	0.120 in		AL3	1SNA163261R0000		50	1.20
6	Test plugs	DIA 2 mm	0.079 in	Black	FC2	1SNA007865R2600		100	2.00
7	Tools	Semi automatic tool			OUPAD	1SNA178944R0400		1	205.00
		Hand tool			OUMAD	1SNA179466R0600		1	29.00
8	Terminal block markers	Blank card		White	RC610	1SNA233000R0100		10	7.50
					RC65	1SNA232000R0000		10	3.60

1SNC167037S0201

D1.5/6.ADO.D2.NF IDC terminal blocks

Component holder - ADO System® - 6 mm 0.236 in spacing

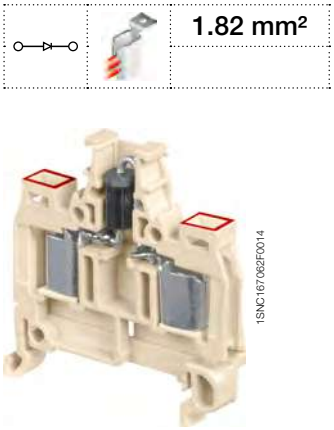

D1.5/6.ADO.D2.NF

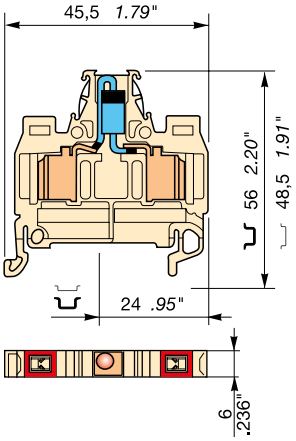

6 mm 0.236 in spacing

Description

- Terminal block equipped with a 1N5408 diode in series,
- With the TE Connectivity ADO System®, experience the fastest and most reliable connection on the market,
- Designed for rolling stock applications exposed to severe constrains (vibrations, shocks etc.),
- Up to 2 wires per connection,
- Red marking to identify wire size.

Ordering details

Description		Color	Type	Part Numbers		Pkg qty	Weight (1 pce) g
Component holder	Equipped with 1N5408 diode	Beige	D1.5/6.ADO.D2.NF	1SNA399916R2600		50	7.00

Main technical data

Connecting capacity		NF F 63-808	NF F 63-296 NF F 63-826	EN 50306
ADO	Flexible without ferrule	0.6 ... 1.82 mm²		0.5 ... 1.5 mm²

	IEC	NF F 61-017
Rated current	1 A	
Rated short-time withstand current (1s)		
Rated voltage	80 V	
Impulse withstand voltage		
Protection	IP20	

CE RoHS EAC

Mounting instructions

Rail		TH 35-7.5, TH 35-15
Tool		ADO system tool

Accessories

	Description			Color	Type	Part Numbers		Pkg qty	Weight (1 pce) g
1	End stops	10 mm	0.394 in	Beige	BAM2	1SNA296351R0000		50	12.00
2	End sections	3 mm	0.118 in	Beige	FEMAD3	1SNA399802R0500		20	2.50
3	Shield connectors				CBM5	1SNA178745R1400		50	1
					CBM8	1SNA178746R1500		50	1
4	Tools	Semi automatic tool			OUPAD	1SNA178944R0400		1	205.00
		Hand tool			OUMAD	1SNA179466R0600		1	29.00
5	Terminal block markers	Blank card		White	RC610	1SNA233000R0100		10	7.50
					RC65	1SNA232000R0000		10	3.60

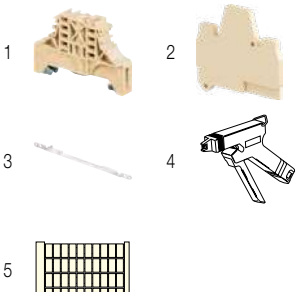

1SNC167005S0201

D1.5/7.ADO-CPE.NF pluggable terminal blocks

Feed-through - ADO System® - 7.62 mm 0.3 in spacing

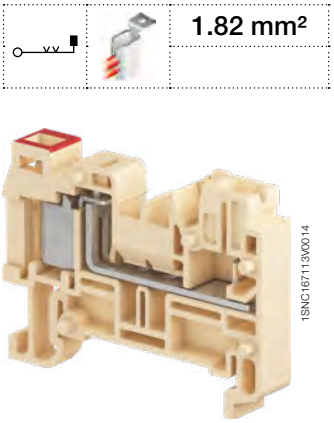

D1.5/7.ADO-CPE.NF

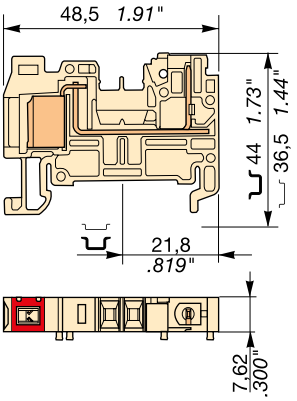

7.62 mm 0.3 in spacing

Description

- Increase your productivity with pluggable terminal blocks: possibility of pre-produced plugs harnesses, time saving plug & play assembly,
- With the TE Connectivity ADO System®, experience the fastest and most reliable connection on the market,
- Designed for rolling stock applications exposed to severe constrains (vibrations, shocks etc.),
- Up to 2 wires per connection,
- Red marking to identify wire size.

Ordering details

Description		Color	Type	Part Numbers		Pkg qty	Weight (1 pce) g
1 ADO - 1 pluggable	1 circuit	Beige	D1.5/7.ADO-CPE.NF	1SNA400153R0700		50	8.40

Main technical data

Connecting capacity		NF F 63-808	NF F 63-296 NF F 63-826	EN 50306
ADO	Flexible without ferrule	0.6 ... 1.82 mm²		0.5 ... 1.5 mm²

	IEC	NF F 61-017
Rated current	16 A	16 A
Rated short-time withstand current (1s)	180 A	
Rated voltage	500 V	500 V
Impulse withstand voltage		
Protection	IP20	

CE RoHS EAC

Mounting instructions

Rail		TH 35-7.5, TH 35-15
Tool		ADO system tool

Compatible products

L 266 200 15 L 267 200 15 L 276 200 15 L 277 200 15

Accessories

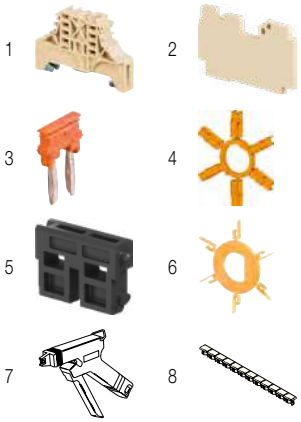

	Description			Color	Type	Part Numbers		Pkg qty	Weight (1 pce) g
1	End stops	10 mm	0.394 in	Beige	BAM2	1SNA296351R0000		50	12.00
2	End sections	2.9 mm	0.114 in	Beige	FECPE.ADO	1SNA400019R0400		20	2.20
3	Jumper bars	10 poles		Orange	BJE762.10	1SNA290453R0500		10	24.00
		2 poles			BJE762.2	1SNA290451R0300		10	5.30
		5 poles			BJE762.5	1SNA290452R0400		10	15.40
4	Insulating tips	For jumper bars type BJE762		Orange	EIP	1SNA290454R0600		10	100.00
5	Locking devices			Black	VRADO.CPE7	1SNA400063R0000		20	0.40
6	Coding pegs			Yellow	COCE	1SNA199321R2100		10	1.00
7	Tools	Semi automatic tool			OUPAD	1SNA178944R0400		1	205.00
		Hand tool			OUMAD	1SNA179466R0600		1	29.00
8	Terminal block markers	Blank strip marker		White	RB-12W7	1SNA290455R0700		50	6.00

1SNC167009S0201

D2.5/7.ADO-CPE.NF1 pluggable terminal blocks

Feed-through - ADO System® - 7.62 mm 0.3 in spacing

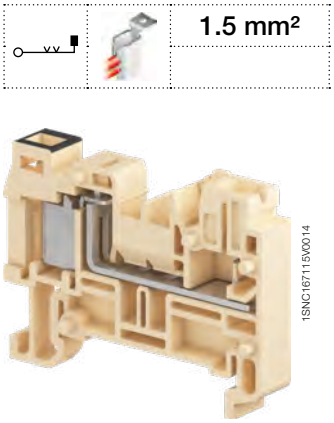

1SNC167115V0014

D2.5/7.ADO-CPE.NF1

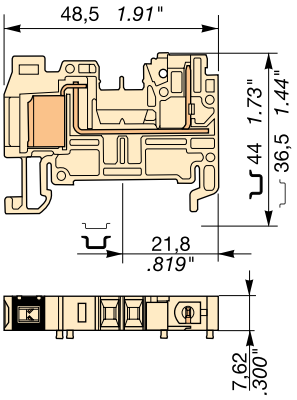

7.62 mm 0.3 in spacing

Description

- Increase your productivity with pluggable terminal blocks: possibility of pre-produced plugs harnesses, time saving plug & play assembly,
- With the TE Connectivity ADO System®, experience the fastest and most reliable connection on the market,
- Designed for rolling stock applications exposed to severe constrains (vibrations, shocks etc.),
- Up to 2 wires per connection,
- Black marking to identify wire size.

Ordering details

Description		Color	Type	Part Numbers		Pkg qty	Weight (1 pce) g
1 ADO - 1 pluggable	1 circuit	Beige	D2.5/7.ADO-CPE.NF1	1SNA400156R0200		50	8.40

Main technical data

Connecting capacity		NF F 63-808	NF F 63-296 NF F 63-826	EN 50306
ADO	Flexible without ferrule		1.5 mm²	

	IEC	NF F 61-017
Rated current	24 A	16 A
Rated short-time withstand current (1s)	180 A	
Rated voltage	500 V	500 V
Impulse withstand voltage		
Protection	IP20	

Mounting instructions

Rail		TH 35-7.5, TH 35-15
Tool		ADO system tool

CE RoHS EAC

Compatible products

L 266 200 15 L 267 200 15 L 276 200 15 L 277 200 15

Accessories

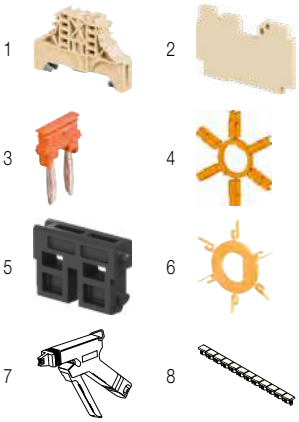

	Description			Color	Type	Part Numbers		Pkg qty	Weight (1 pce) g
1	End stops	10 mm	0.394 in	Beige	BAM2	1SNA296351R0000		50	12.00
2	End sections	2.9 mm	0.114 in	Beige	FECPE.ADO	1SNA400019R0400		20	2.20
3	Jumper bars	10 poles		Orange	BJE762.10	1SNA290453R0500		10	24.00
		2 poles			BJE762.2	1SNA290451R0300		10	5.30
		5 poles			BJE762.5	1SNA290452R0400		10	15.40
4	Insulating tips	For jumper bars type BJE762		Orange	EIP	1SNA290454R0600		10	100.00
5	Locking devices			Black	VRADO.CPE7	1SNA400063R0000		20	0.40
6	Coding pegs			Yellow	COCE	1SNA199321R2100		10	1.00
7	Tools	Semi automatic tool			OUPAD	1SNA178944R0400		1	205.00
		Hand tool			OUMAD	1SNA179466R0600		1	29.00
8	Terminal block markers	Blank strip marker		White	RB-12W7	1SNA290455R0700		50	6.00

1SNC167010S0201

D1.5/7.2ADO-CPE.NF pluggable terminal blocks

Feed-through - ADO System® - 7.62 mm 0.3 in spacing

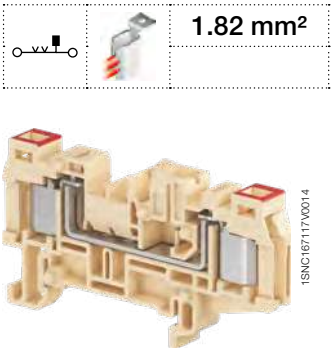

1.82 mm²

1SNC167117V0014

D1.5/7.2ADO-CPE.NF

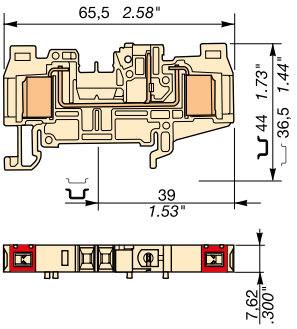

7.62 mm 0.3 in spacing

Description

- Increase your productivity with pluggable terminal blocks: possibility of pre-produced plugs harnesses, time saving plug & play assembly,
- With the TE Connectivity ADO System®, experience the fastest and most reliable connection on the market,
- Designed for rolling stock applications exposed to severe constrains (vibrations, shocks etc.),
- Up to 2 wires per connection,
- Red marking to identify wire size.

Ordering details

Description		Color	Type	Part Numbers		Pkg qty	Weight (1 pce) g
2 ADO - 1 pluggable	1 circuit	Beige	D1.5/7.2ADO-CPE.NF	1SNA400154R0000		50	11.00

Main technical data

Connecting capacity		NF F 63-808	NF F 63-296 NF F 63-826	EN 50306
ADO	Flexible without ferrule	0.6 ... 1.82 mm²		0.5 ... 1.5 mm²

	IEC	NF F 61-017
Rated current	16 A	16 A
Rated short-time withstand current (1s)	180 A	
Rated voltage	500 V	500 V
Impulse withstand voltage		
Protection	IP20	

Mounting instructions

Rail		TH 35-7.5, TH 35-15
Tool		ADO system tool

CE RoHS EAC

Compatible products

L 266 200 15 L 267 200 15 L 276 200 15 L 277 200 15

Accessories

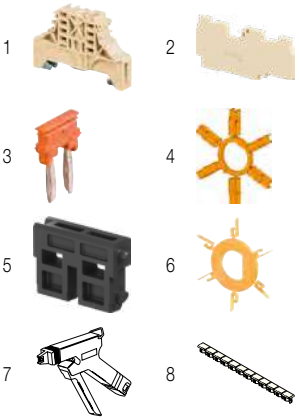

	Description			Color	Type	Part Numbers		Pkg qty	Weight (1 pce) g
1	End stops	10 mm	0.394 in	Beige	BAM2	1SNA296351R0000		50	12.00
2	End sections	2.9 mm	0.114 in	Beige	FECPE.2ADO	1SNA400018R0300		20	2.20
3	Jumper bars	10 poles		Orange	BJE762.10	1SNA290453R0500		10	24.00
		2 poles			BJE762.2	1SNA290451R0300		10	5.30
		5 poles			BJE762.5	1SNA290452R0400		10	15.40
4	Insulating tips	For jumper bars type BJE762		Orange	EIP	1SNA290454R0600		10	100.00
5	Locking devices			Black	VRADO.CPE7	1SNA400063R0000		20	0.40
6	Coding pegs			Yellow	COCE	1SNA199321R2100		10	1.00
7	Tools	Semi automatic tool			OUPAD	1SNA178944R0400		1	205.00
		Hand tool			OUMAD	1SNA179466R0600		1	29.00
8	Terminal block markers	Blank strip marker		White	RB-12W7	1SNA290455R0700		50	6.00

4

1SNC167071S0201

D2.5/7.ADO-CPE.NF pluggable terminal blocks

Feed-through - ADO System® - 7.62 mm 0.3 in spacing

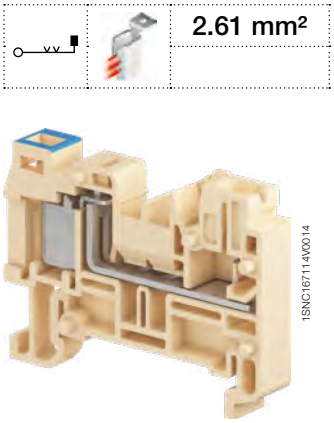

1SNC167114V0014

D2.5/7.ADO-CPE.NF

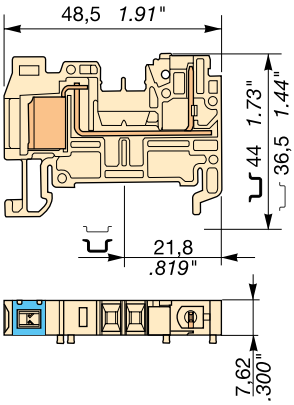

7.62 mm 0.3 in spacing

Description

- Increase your productivity with pluggable terminal blocks: possibility of pre-produced plugs harnesses, time saving plug & play assembly,
- With the TE Connectivity ADO System®, experience the fastest and most reliable connection on the market,
- Designed for rolling stock applications exposed to severe constrains (vibrations, shocks etc.),
- Up to 2 wires per connection,
- Blue marking to identify wire size.

Ordering details

Description		Color	Type	Part Numbers		Pkg qty	Weight (1 pce) g
1 ADO - 1 pluggable	1 circuit	Beige	D2.5/7.ADO-CPE.NF	1SNA400061R0600		50	8.40

Main technical data

Connecting capacity		NF F 63-808	NF F 63-296 NF F 63-826	EN 50306
ADO	Flexible without ferrule	0.93 ... 2.61 mm²		1 ... 2.5 mm²

	IEC	NF F 61-017
Rated current	24 A	16 A
Rated short-time withstand current (1s)	300 A	
Rated voltage	500 V	500 V
Impulse withstand voltage		
Protection	IP20	

CE RoHS EAC

Mounting instructions

Rail		TH 35-7.5, TH 35-15
Tool		ADO system tool

Compatible products

L 266 200 15 L 267 200 15 L 276 200 15 L 277 200 15

Accessories

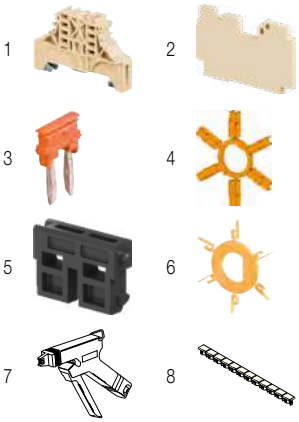

	Description			Color	Type	Part Numbers		Pkg qty	Weight (1 pce) g
1	**End stops**	10 mm	0.394 in	Beige	BAM2	1SNA296351R0000		50	12.00
2	**End sections**	2.9 mm	0.114 in	Beige	FECPE.ADO	1SNA400019R0400		20	2.20
3	**Jumper bars**	10 poles		Orange	BJE762.10	1SNA290453R0500		10	24.00
		2 poles			BJE762.2	1SNA290451R0300		10	5.30
		5 poles			BJE762.5	1SNA290452R0400		10	15.40
4	**Insulating tips**	For jumper bars type BJE762		Orange	EIP	1SNA290454R0600		10	100.00
5	**Locking devices**			Black	VRADO.CPE7	1SNA400063R0000		20	0.40
6	**Coding pegs**			Yellow	COCE	1SNA199321R2100		10	1.00
7	**Tools**	Semi automatic tool			OUPAD	1SNA178944R0400		1	205.00
		Hand tool			OUMAD	1SNA179466R0600		1	29.00
8	**Terminal block markers**	Blank strip marker		White	RB-12W7	1SNA290455R0700		50	6.00

1SNC167076S0201

D2.5/7.2ADO-CPE.NF pluggable terminal blocks

Feed-through - ADO System® - 7.62 mm 0.3 in spacing

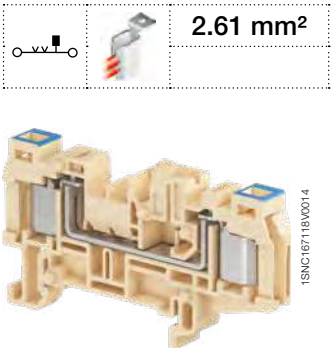

2.61 mm²

1SNC167118V0014

D2.5/7.2ADO-CPE.NF

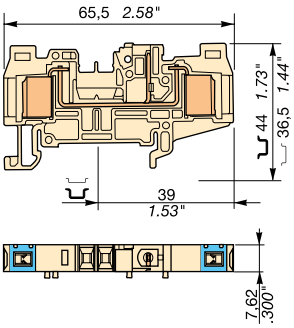

7.62 mm 0.3 in spacing

Description

- Increase your productivity with pluggable terminal blocks: possibility of pre-produced plugs harnesses, time saving plug & play assembly,
- With the TE Connectivity ADO System®, experience the fastest and most reliable connection on the market,
- Designed for rolling stock applications exposed to severe constrains (vibrations, shocks etc.),
- Up to 2 wires per connection,
- Blue marking to identify wire size.

Ordering details

Description		Color	Type	Part Numbers		Pkg qty	Weight (1 pce) g
2 ADO - 1 pluggable	1 circuit	Beige	D2.5/7.2ADO-CPE.NF	1SNA400062R0700		50	11.00

Main technical data

Connecting capacity		NF F 63-808	NF F 63-296 NF F 63-826	EN 50306
ADO	Flexible without ferrule	0.93 ... 2.61 mm²		1 ... 2.5 mm²

	IEC	NF F 61-017
Rated current	24 A	16 A
Rated short-time withstand current (1s)	300 A	
Rated voltage	500 V	500 V
Impulse withstand voltage		
Protection	IP20	

CE RoHS EAC

Mounting instructions

Rail		TH 35-7.5, TH 35-15
Tool		ADO system tool

Compatible products

L 266 200 15 L 267 200 15 L 276 200 15 L 277 200 15

Accessories

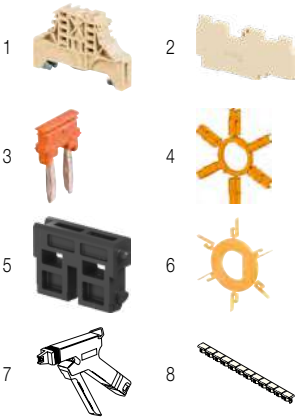

	Description			Color	Type	Part Numbers		Pkg qty	Weight (1 pce) g
1	End stops	10 mm	0.394 in	Beige	BAM2	1SNA296351R0000		50	12.00
2	End sections	2.9 mm	0.114 in	Beige	FECPE.2ADO	1SNA400018R0300		20	2.20
3	Jumper bars	10 poles		Orange	BJE762.10	1SNA290453R0500		10	24.00
		2 poles			BJE762.2	1SNA290451R0300		10	5.30
		5 poles			BJE762.5	1SNA290452R0400		10	15.40
4	Insulating tips	For jumper bars type BJE762		Orange	EIP	1SNA290454R0600		10	100.00
5	Locking devices			Black	VRADO.CPE7	1SNA400063R0000		20	0.40
6	Coding pegs			Yellow	COCE	1SNA199321R2100		10	1.00
7	Tools	Semi automatic tool			OUPAD	1SNA178944R0400		1	205.00
		Hand tool			OUMAD	1SNA179466R0600		1	29.00
8	Terminal block markers	Blank strip marker		White	RB-12W7	1SNA290455R0700		50	6.00

1SNC167006S0201

D4/7.ADO-CPE.NF pluggable terminal blocks

Feed-through - ADO System® - 7.62 mm 0.3 in spacing

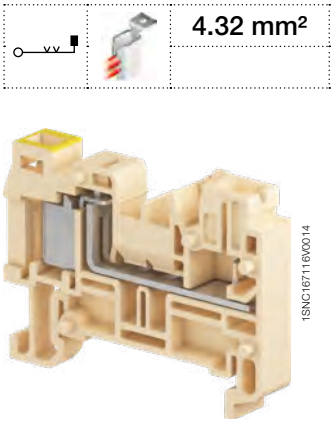

D4/7.ADO-CPE.NF

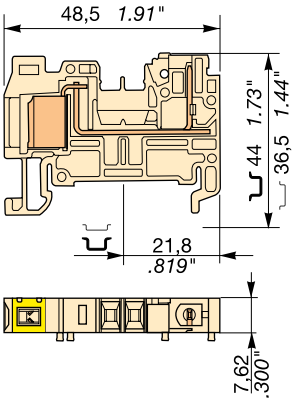

7.62 mm 0.3 in spacing

Description

- Increase your productivity with pluggable terminal blocks: possibility of pre-produced plugs harnesses, time saving plug & play assembly,
- With the TE Connectivity ADO System®, experience the fastest and most reliable connection on the market,
- Designed for rolling stock applications exposed to severe constrains (vibrations, shocks etc.),
- Up to 2 wires per connection,
- Yellow marking to identify wire size.

Ordering details

Description		Color	Type	Part Numbers		Pkg qty	Weight (1 pce) g
1 ADO - 1 pluggable	1 circuit	Beige	D4/7.ADO-CPE.NF	1SNA400240R2200		50	8.40

Main technical data

Connecting capacity		NF F 63-808	NF F 63-296 NF F 63-826	EN 50306
ADO	Flexible without ferrule	4.32 mm²		

	IEC	NF F 61-017
Rated current	24 A	16 A
Rated short-time withstand current (1s)	480 A	
Rated voltage	500 V	500 V
Impulse withstand voltage		
Protection	IP20	

Mounting instructions

Rail		TH 35-7.5, TH 35-15
Tool		ADO system tool

CE RoHS EAC

Compatible products

L 266 200 15 L 267 200 15 L 276 200 15 L 277 200 15

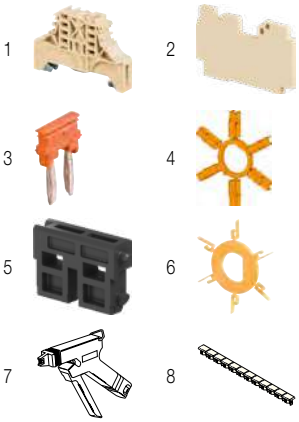

Accessories

	Description			Color	Type	Part Numbers		Pkg qty	Weight (1 pce) g
1	End stops	10 mm	0.394 in	Beige	BAM2	1SNA296351R0000		50	12.00
2	End sections	2.9 mm	0.114 in	Beige	FECPE.ADO	1SNA400019R0400		20	2.20
3	Jumper bars	10 poles		Orange	BJE762.10	1SNA290453R0500		10	24.00
		2 poles			BJE762.2	1SNA290451R0300		10	5.30
		5 poles			BJE762.5	1SNA290452R0400		10	15.40
4	Insulating tips	For jumper bars type BJE762		Orange	EIP	1SNA290454R0600		10	100.00
5	Locking devices			Black	VRADO.CPE7	1SNA400063R0000		20	0.40
6	Coding pegs			Yellow	COCE	1SNA199321R2100		10	1.00
7	Tools	Semi automatic tool			OUPAD	1SNA178944R0400		1	205.00
		Hand tool			OUMAD	1SNA179466R0600		1	29.00
8	Terminal block markers	Blank strip marker		White	RB-12W7	1SNA290455R0700		50	6.00

1SNC167070S0201

D4/7.2ADO-CPE.NF pluggable terminal blocks

Feed-through - ADO System® - 7.62 mm 0.3 in spacing

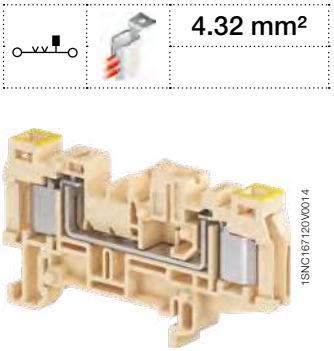

4.32 mm²

1SNC167120V0014

D4/7.2ADO-CPE.NF

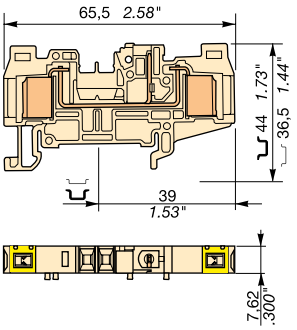

7.62 mm 0.3 in spacing

Description

- Increase your productivity with pluggable terminal blocks: possibility of pre-produced plugs harnesses, time saving plug & play assembly,
- With the TE Connectivity ADO System®, experience the fastest and most reliable connection on the market,
- Designed for rolling stock applications exposed to severe constrains (vibrations, shocks etc.),
- Up to 2 wires per connection,
- Yellow marking to identify wire size.

Ordering details

Description		Color	Type	Part Numbers		Pkg qty	Weight (1 pce) g
2 ADO - 1 pluggable	1 circuit	Beige	D4/7.2ADO-CPE.NF	1SNA400241R1700		50	11.00

Main technical data

Connecting capacity		NF F 63-808	NF F 63-296 NF F 63-826	EN 50306
ADO	Flexible without ferrule	4.32 mm²		

	IEC	NF F 61-017
Rated current	24 A	16 A
Rated short-time withstand current (1s)	480 A	
Rated voltage	500 V	500 V
Impulse withstand voltage		
Protection	IP20	

CE RoHS EAC

Mounting instructions

Rail		TH 35-7.5, TH 35-15
Tool		ADO system tool

Compatible products

L 266 200 15 L 267 200 15 L 276 200 15 L 277 200 15

Accessories

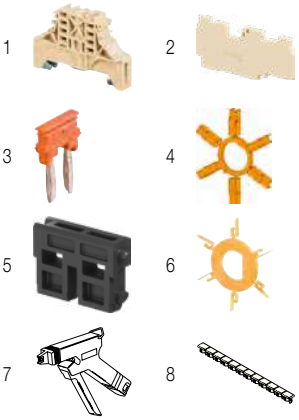

	Description			Color	Type	Part Numbers		Pkg qty	Weight (1 pce) g
1	End stops	10 mm	0.394 in	Beige	BAM2	1SNA296351R0000		50	12.00
2	End sections	2.9 mm	0.114 in	Beige	FECPE.2ADO	1SNA400018R0300		20	2.20
3	Jumper bars	10 poles		Orange	BJE762.10	1SNA290453R0500		10	24.00
		2 poles			BJE762.2	1SNA290451R0300		10	5.30
		5 poles			BJE762.5	1SNA290452R0400		10	15.40
4	Insulating tips	For jumper bars type BJE762		Orange	EIP	1SNA290454R0600		10	100.00
5	Locking devices			Black	VRADO.CPE7	1SNA400063R0000		20	0.40
6	Coding pegs			Yellow	COCE	1SNA199321R2100		10	1.00
7	Tools	Semi automatic tool			OUPAD	1SNA178944R0400		1	205.00
		Hand tool			OUMAD	1SNA179466R0600		1	29.00
8	Terminal block markers	Blank strip marker		White	RB-12W7	1SNA290455R0700		50	6.00

4

1SNC167008S0201

D2.5/7.2CPE pluggable terminal blocks

Feed-through - ADO System® - 7.62 mm 0.3 in spacing

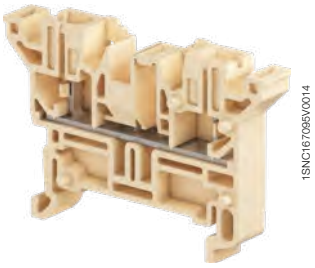

D2.5/7.2CPE

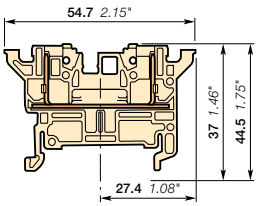

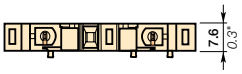

7.62 mm 0.3 in spacing

Description

- Increase your productivity with pluggable terminal blocks: possibility of pre-produced plugs harnesses, time saving plug & play assembly,
- With the TE Connectivity ADO System®, experience the fastest and most reliable connection on the market,
- Designed for rolling stock applications exposed to severe constrains (vibrations, shocks etc.),
- 1 plug on each side: 1 circuit.

Ordering details

Description		Color	Type	Part Numbers		Pkg qty	Weight (1 pce) g
2 pluggables	1 circuit	Beige	D2.5/7.2CPE	1SNA400703R1700		50	7.00

Main technical data

Connecting capacity		NF F 63-808	NF F 63-296 NF F 63-826	EN 50306
ADO	Flexible without ferrule			

	IEC	NF F 61-017
Rated current	16 A	16 A
Rated short-time withstand current (1s)		
Rated voltage	500 V	500 V
Impulse withstand voltage		
Protection	IP20	

CE RoHS EAC

Mounting instructions

Rail		TH 35-7.5, TH 35-15
Tool		ADO system tool

Compatible products

L 266 200 15 L 267 200 15 L 276 200 15 L 277 200 15

Accessories

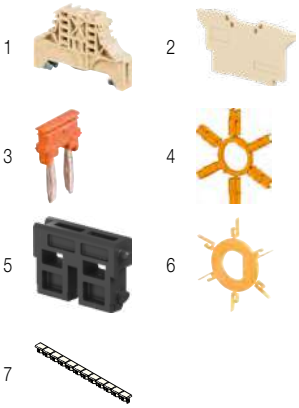

	Description			Color	Type	Part Numbers		Pkg qty	Weight (1 pce) g
1	**End stops**	10 mm	0.394 in	Beige	BAM2	1SNA296351R0000		50	12.00
2	**End sections**	2.8 mm	0.11 in	Beige	FECPE	1SNA400708R2400		20	1.90
3	**Jumper bars**	10 poles		Orange	BJE762.10	1SNA290453R0500		10	24.00
		2 poles			BJE762.2	1SNA290451R0300		10	5.30
		5 poles			BJE762.5	1SNA290452R0400		10	15.40
4	**Insulating tips**	For jumper bars type BJE762		Orange	EIP	1SNA290454R0600		10	100.00
5	**Locking devices**			Black	VRADO.CPE7	1SNA400063R0000		20	0.40
6	**Coding pegs**			Yellow	COCE	1SNA199321R2100		10	1.00
7	**Terminal block markers**	Blank strip marker		White	RB-12W7	1SNA290455R0700		50	6.00

1SNC167050S0201

D2.5/7.CPE.CPE pluggable terminal blocks

Feed-through - ADO System® - 7.62 mm 0.3 in spacing

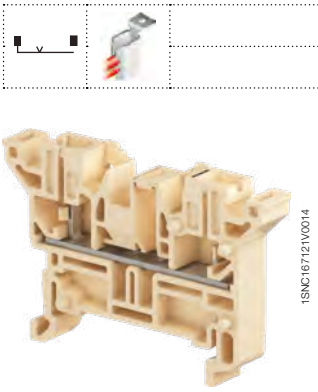

1SNC167121V0014

D2.5/7.CPE.CPE

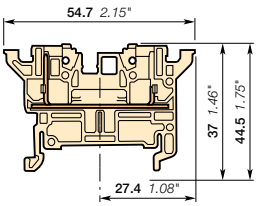

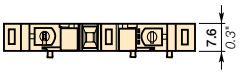

7.62 mm 0.3 in spacing

Description

- Increase your productivity with pluggable terminal blocks: possibility of pre-produced plugs harnesses, time saving plug & play assembly,
- With the TE Connectivity ADO System®, experience the fastest and most reliable connection on the market,
- Designed for rolling stock applications exposed to severe constrains (vibrations, shocks etc.),
- 1 plug on each side: 2 circuits.

Ordering details

Description		Color	Type	Part Numbers		Pkg qty	Weight (1 pce) g
2 pluggables	2 circuits	Beige	D2.5/7.CPE.CPE	1SNA400704R1000		50	7.00

Main technical data

Connecting capacity		NF F 63-808	NF F 63-296 NF F 63-826	EN 50306
ADO	Flexible without ferrule			

	IEC	NF F 61-017
Rated current	16 A	16 A
Rated short-time withstand current (1s)		
Rated voltage	500 V	500 V
Impulse withstand voltage		
Protection	IP20	

CE RoHS EAC

Mounting instructions

Rail		TH 35-7.5, TH 35-15
Tool		ADO system tool

Compatible products

L 266 200 15

L 267 200 15

L 276 200 15

L 277 200 15

Accessories

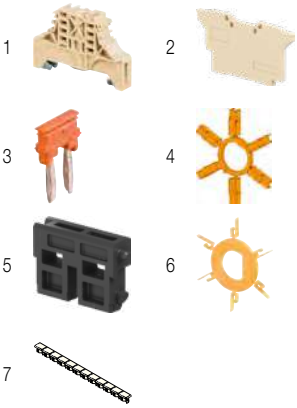

	Description			Color	Type	Part Numbers		Pkg qty	Weight (1 pce) g
1	End stops	10 mm	0.394 in	Beige	BAM2	1SNA296351R0000		50	12.00
2	End sections	2.8 mm	0.11 in	Beige	FECPE	1SNA400708R2400		20	1.90
3	Jumper bars	10 poles		Orange	BJE762.10	1SNA290453R0500		10	24.00
		2 poles			BJE762.2	1SNA290451R0300		10	5.30
		5 poles			BJE762.5	1SNA290452R0400		10	15.40
4	Insulating tips	For jumper bars type BJE762		Orange	EIP	1SNA290454R0600		10	100.00
5	Locking devices			Black	VRADO.CPE7	1SNA400063R0000		20	0.40
6	Coding pegs			Yellow	COCE	1SNA199321R2100		10	1.00
7	Terminal block markers	Blank strip marker		White	RB-12W7	1SNA290455R0700		50	6.00

1SNC167031S0201

L 266 200 15 female plugs

ADO System® - 7.62 mm 0.3 in spacing

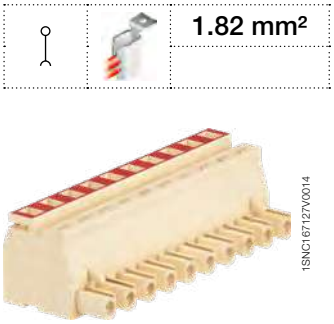

1.82 mm²

1SNC167127V0014

L 266 200 15

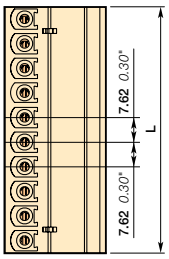

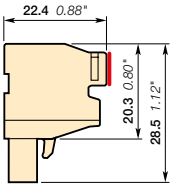

L = nb poles x 7.62

7.62 mm 0.3 in spacing

Description

- With the TE Connectivity ADO System®, experience the fastest and most reliable connection on the market,
- Designed for rolling stock applications exposed to severe constrains (vibrations, shocks etc.),
- Up to 2 wires per connection,
- Red marking to identify wire size.

Ordering details

Description		Color	Type	Part Numbers		Pkg qty	Weight (1 pce) g
Female plugs	2 poles	Beige	FIC F.ADO.T1.2P.NF	1SSS266202R8800		50	6.00
	3 poles	Beige	FIC F.ADO.T1.3P.NF	1SSS266203R8800		50	10.00
	4 poles	Beige	FIC F.ADO.T1.4P.NF	1SSS266204R8800		50	13.00
	5 poles	Beige	FIC F.ADO.T1.5P.NF	1SSS266205R8800		50	16.00
	6 poles	Beige	FIC F.ADO.T1.6P.NF	1SSS266206R8800		50	19.00
	7 poles	Beige	FIC F.ADO.T1.7P.NF	1SSS266207R8800		50	22.00
	8 poles	Beige	FIC F.ADO.T1.8P.NF	1SSS266208R8800		50	26.00
	9 poles	Beige	FIC F.ADO.T1.9P.NF	1SSS266209R8800		50	29.00
	10 poles	Beige	FIC F.ADO.T1.10P.NF	1SSS266210R8800		50	32.00

Main technical data

Connecting capacity		NF F 63-808	NF F 63-296 NF F 63-826	EN 50306
ADO	Flexible without ferrule	0.6 ... 1.82 mm²		0.5 ... 1.5 mm²

	IEC	NF F 61-017
Rated current	16 A	16 A
Rated short-time withstand current (1s)	218.4 A	
Rated voltage	500 V	500 V
Impulse withstand voltage		
Protection	IP20	

CE RoHS USR CNR EAC

Mounting instructions

Rail		
Tool		ADO system tool

Compatible products

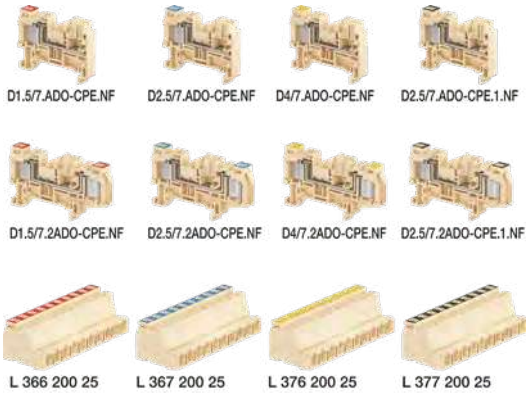

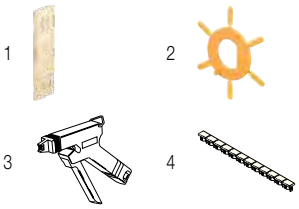

Accessories

	Description		Color	Type	Part Numbers		Pkg qty	Weight (1 pce) g
1	Cable clamps	Used on products from 3 to 7 poles	Beige	PT1	1SSS299253R2800		20	1.60
		Used on products from 8 to 16 poles		PT2	1SSS299254R2800		20	4.80
2	Coding pegs		Yellow	COCF	1SNA199320R0400		10	1.00
3	Tools	Semi automatic tool		OUPAD	1SNA178944R0400		1	205.00
		Hand tool		OUMAD	1SNA179466R0600		1	29.00
4	Terminal block markers	Blank strip marker	White	RB-12W7	1SNA290455R0700		50	6.00

1SNC167011S0201

L 266 200 25 female plugs with brackets

ADO System® - 7.62 mm 0.3 in spacing

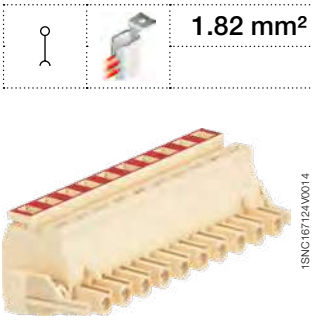

1.82 mm²

1SNC167124V0014

L 266 200 25

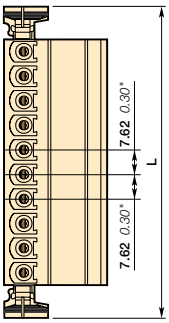

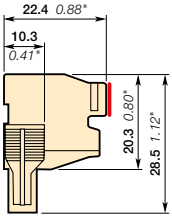

L = (nb poles x 7.62) + 13.7

7.62 mm 0.3 in spacing

Description

- With the TE Connectivity ADO System®, experience the fastest and most reliable connection on the market,
- Designed for rolling stock applications exposed to severe constrains (vibrations, shocks etc.),
- Up to 2 wires per connection,
- Red marking to identify wire size.

Ordering details

Description		Color	Type	Part Numbers		Pkg qty	Weight (1 pce) g
Female plugs	2 poles	Beige	FIC F.ADO.T1.B.2P.NF	1SSS266202R9800		50	7.40
	3 poles	Beige	FIC F.ADO.T1.B.3P.NF	1SSS266203R9800		50	10.00
	4 poles	Beige	FIC F.ADO.T1.B.4P.NF	1SSS266204R9800		50	14.00
	5 poles	Beige	FIC F.ADO.T1.B.5P.NF	1SSS266205R9800		50	18.00
	6 poles	Beige	FIC F.ADO.T1.B.6P.NF	1SSS266206R9800		50	21.00
	8 poles	Beige	FIC F.ADO.T1.B.8P.NF	1SSS266208R9800		50	28.00
	10 poles	Beige	FIC F.ADO.T1.B.10P.NF	1SSS266210R9800		50	35.00

Main technical data

Connecting capacity		NF F 63-808	NF F 63-296 NF F 63-826	EN 50306
ADO	Flexible without ferrule	0.6 ... 1.82 mm²		0.5 ... 1.5 mm²

	IEC	NF F 61-017
Rated current	16 A	16 A
Rated short-time withstand current (1s)	218.4 A	
Rated voltage	500 V	500 V
Impulse withstand voltage		
Protection	IP20	

CE RoHS USR CNR EAC

Mounting instructions

Rail

Tool

ADO system tool

Compatible products

L 366 200 25 L 367 200 25 L 376 200 25 L 377 200 25

L 366 200 45 L 367 200 45 L 376 200 45

Accessories

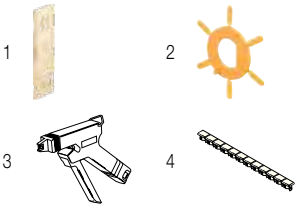

	Description		Color	Type	Part Numbers		Pkg qty	Weight (1 pce) g
1	Cable clamps	Used on products from 3 to 7 poles	Beige	PT1	1SSS299253R2800		20	1.60
		Used on products from 8 to 16 poles		PT2	1SSS299254R2800		20	4.80
2	Coding pegs		Yellow	COCF	1SNA199320R0400		10	1.00
3	Tools	Semi automatic tool		OUPAD	1SNA178944R0400		1	205.00
		Hand tool		OUMAD	1SNA179466R0600		1	29.00
4	Terminal block markers	Blank strip marker	White	RB-12W7	1SNA290455R0700		50	6.00

1SNC167038S0201

L 277 200 15 female plugs

ADO System® - 7.62 mm 0.3 in spacing

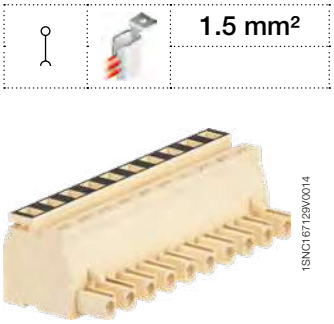

1.5 mm²

1SNC167129V0014

L 277 200 15

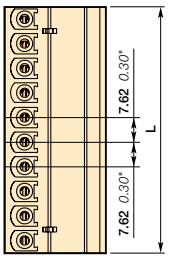

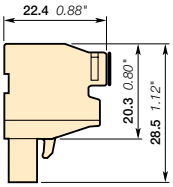

L = nb poles x 7.62

7.62 mm 0.3 in spacing

Description

- With the TE Connectivity ADO System®, experience the fastest and most reliable connection on the market,
- Designed for rolling stock applications exposed to severe constrains (vibrations, shocks etc.),
- Up to 2 wires per connection,
- Black marking to identify wire size.

Ordering details

Description		Color	Type	Part Numbers		Pkg qty	Weight (1 pce) g
Female plugs	2 poles	Beige	FIC F.ADO.T3-.2P.NF	1SSS277202R8800		50	6.00
	3 poles	Beige	FIC F.ADO.T3-.3P.NF	1SSS277203R8800		50	10.00
	4 poles	Beige	FIC F.ADO.T3-.4P.NF	1SSS277204R8800		50	13.00
	5 poles	Beige	FIC F.ADO.T3-.5P.NF	1SSS277205R8800		50	16.00
	6 poles	Beige	FIC F.ADO.T3-.6P.NF	1SSS277206R8800		50	19.00

Main technical data

Connecting capacity		NF F 63-808	NF F 63-296 NF F 63-826	EN 50306
ADO	Flexible without ferrule		1.5 mm²	

	IEC	NF F 61-017
Rated current	24 A	16 A
Rated short-time withstand current (1s)	180 A	
Rated voltage	500 V	500 V
Impulse withstand voltage		
Protection	IP20	

CE RoHS EAC

Mounting instructions

Rail		
Tool		ADO system tool

Compatible products

Accessories

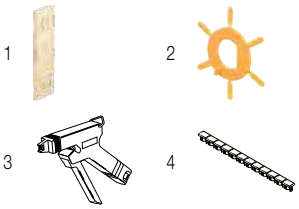

	Description		Color	Type	Part Numbers		Pkg qty	Weight (1 pce) g
1	Cable clamps	Used on products from 3 to 7 poles	Beige	PT1	1SSS299253R2800		20	1.60
		Used on products from 8 to 16 poles		PT2	1SSS299254R2800		20	4.80
2	Coding pegs		Yellow	COCF	1SNA199320R0400		10	1.00
3	Tools	Semi automatic tool		OUPAD	1SNA178944R0400		1	205.00
		Hand tool		OUMAD	1SNA179466R0600		1	29.00
4	Terminal block markers	Blank strip marker	White	RB-12W7	1SNA290455R0700		50	6.00

1SNC167015S0201

L 267 200 15 female plugs

ADO System® - 7.62 mm 0.3 in spacing

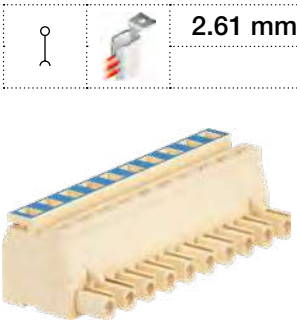

1SNC167128V0014

L 267 200 15

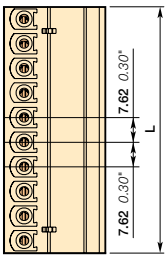

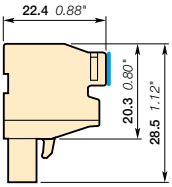

L = nb poles x 7.62

7.62 mm 0.3 in spacing

2.61 mm²

Description

- With the TE Connectivity ADO System®, experience the fastest and most reliable connection on the market,
- Designed for rolling stock applications exposed to severe constrains (vibrations, shocks etc.),
- Up to 2 wires per connection,
- Blue marking to identify wire size.

Ordering details

Description		Color	Type	Part Numbers		Pkg qty	Weight (1 pce) g
Female plugs	2 poles	Beige	FIC F.ADO.T2.2P.NF	1SSS267202R8800		50	6.00
	3 poles	Beige	FIC F.ADO.T2.3P.NF	1SSS267203R8800		50	10.00
	4 poles	Beige	FIC F.ADO.T2.4P.NF	1SSS267204R8800		50	13.00
	5 poles	Beige	FIC F.ADO.T2.5P.NF	1SSS267205R8800		50	16.00
	6 poles	Beige	FIC F.ADO.T2.6P.NF	1SSS267206R8800		50	19.00
	7 poles	Beige	FIC F.ADO.T2.7P.NF	1SSS267207R8800		50	22.00
	8 poles	Beige	FIC F.ADO.T2.8P.NF	1SSS267208R8800		50	26.00
	10 poles	Beige	FIC F.ADO.T2.10P.NF	1SSS267210R8800		50	32.00

Main technical data

Connecting capacity		NF F 63-808	NF F 63-296 NF F 63-826	EN 50306
ADO	Flexible without ferrule	0.93 ... 2.61 mm²		1 ... 2.5 mm²

	IEC	NF F 61-017
Rated current	24 A	16 A
Rated short-time withstand current (1s)	313.2 A	
Rated voltage	500 V	500 V
Impulse withstand voltage		
Protection	IP20	

CE RoHS USR CNR EAC

Mounting instructions

Rail		
Tool		ADO system tool

Compatible products

D1.5/7.ADO-CPE.NF

D2.5/7.ADO-CPE.NF

D4/7.ADO-CPE.NF

D2.5/7.ADO-CPE.1.NF

D1.5/7.2ADO-CPE.NF

D2.5/7.2ADO-CPE.NF

D4/7.2ADO-CPE.NF

D2.5/7.2ADO-CPE.1.NF

L 366 200 25

L 367 200 25

L 376 200 25

L 377 200 25

Accessories

1

2

3

4

	Description		Color	Type	Part Numbers		Pkg qty	Weight (1 pce) g
1	Cable clamps	Used on products from 3 to 7 poles	Beige	PT1	1SSS299253R2800		20	1.60
		Used on products from 8 to 16 poles		PT2	1SSS299254R2800		20	4.80
2	Coding pegs		Yellow	COCF	1SNA199320R0400		10	1.00
3	Tools	Semi automatic tool		OUPAD	1SNA178944R0400		1	205.00
		Hand tool		OUMAD	1SNA179466R0600		1	29.00
4	Terminal block markers	Blank strip marker	White	RB-12W7	1SNA290455R0700		50	6.00

1SNC167012S0201

L 267 200 25 female plugs with brackets

ADO System® - 7.62 mm 0.3 in spacing

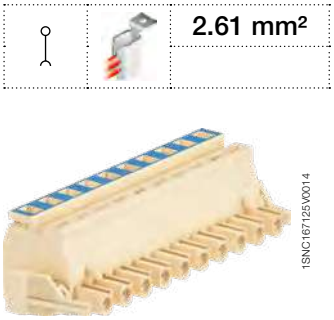

2.61 mm²

1SNC167125V0014

L 267 200 25

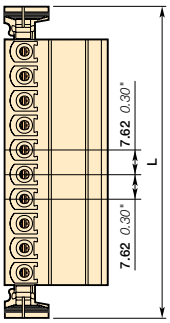

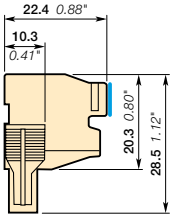

L = (nb poles x 7.62) + 13.7

7.62 mm 0.3 in spacing

Description

- With the TE Connectivity ADO System®, experience the fastest and most reliable connection on the market,
- Designed for rolling stock applications exposed to severe constrains (vibrations, shocks etc.),
- Up to 2 wires per connection,
- Blue marking to identify wire size.

Ordering details

Description		Color	Type	Part Numbers		Pkg qty	Weight (1 pce) g
Female plugs	2 poles	Beige	FIC F.ADO.T2.B.2P.NF	1SSS267202R9800		50	7.40
	3 poles	Beige	FIC F.ADO.T2.B.3P.NF	1SSS267203R9800		50	11.00
	4 poles	Beige	FIC F.ADO.T2.B.4P.NF	1SSS267204R9800		50	14.00
	5 poles	Beige	FIC F.ADO.T2.B.5P.NF	1SSS267205R9800		50	18.00
	6 poles	Beige	FIC F.ADO.T2.B.6P.NF	1SSS267206R9800		50	21.00
	8 poles	Beige	FIC F.ADO.T2.B.8P.NF	1SSS267208R9800		50	28.00
	10 poles	Beige	FIC F.ADO.T2.B.10P.NF	1SSS267210R9800		50	35.00
	16 poles	Beige	FIC F.ADO.T2.B.16P.NF	1SSS267216R9800		20	57.00

Main technical data

Connecting capacity		NF F 63-808	NF F 63-296 NF F 63-826	EN 50306
ADO	Flexible without ferrule	0.93 ... 2.61 mm²		1 ... 2.5 mm²

	IEC	NF F 61-017
Rated current	24 A	16 A
Rated short-time withstand current (1s)	313.2 A	
Rated voltage	500 V	500 V
Impulse withstand voltage		
Protection	IP20	

CE RoHS USR CNR EAC

Mounting instructions

Rail

Tool

ADO system tool

Compatible products

L 366 200 25 L 367 200 25 L 376 200 25 L 377 200 25

L 366 200 45 L 367 200 45 L 376 200 45

Accessories

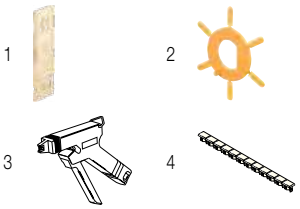

	Description		Color	Type	Part Numbers		Pkg qty	Weight (1 pce) g
1	Cable clamps	Used on products from 3 to 7 poles	Beige	PT1	1SSS299253R2800		20	1.60
		Used on products from 8 to 16 poles		PT2	1SSS299254R2800		20	4.80
2	Coding pegs		Yellow	COCF	1SNA199320R0400		10	1.00
3	Tools	Semi automatic tool		OUPAD	1SNA178944R0400		1	205.00
		Hand tool		OUMAD	1SNA179466R0600		1	29.00
4	Terminal block markers	Blank strip marker	White	RB-12W7	1SNA290455R0700		50	6.00

1SNC167041S0201

L 276 200 15 female plugs

ADO System® - 7.62 mm 0.3 in spacing

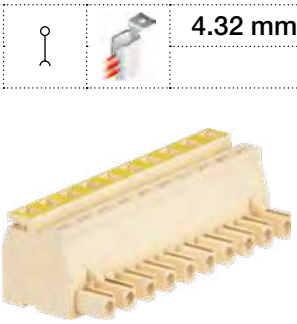

1SNC167130V0014

L 276 200 15

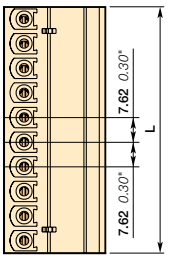

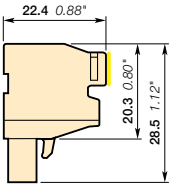

L = nb poles x 7.62

7.62 mm 0.3 in spacing

4.32 mm²

Description

- With the TE Connectivity ADO System®, experience the fastest and most reliable connection on the market,
- Designed for rolling stock applications exposed to severe constrains (vibrations, shocks etc.),
- Up to 2 wires per connection,
- Yellow marking to identify wire size.

Ordering details

Description		Color	Type	Part Numbers		Pkg qty	Weight (1 pce) g
Female plugs	4 poles	Beige	FIC F.ADO.T3.4P.NF	1SSS276204R8800		50	13.00
	5 poles	Beige	FIC F.ADO.T3.5P.NF	1SSS276205R8800		50	16.00

Main technical data

Connecting capacity		NF F 63-808	NF F 63-296 NF F 63-826	EN 50306
ADO	Flexible without ferrule	4.32 mm²		

	IEC	NF F 61-017
Rated current	24 A	16 A
Rated short-time withstand current (1s)	518.4 A	
Rated voltage	500 V	500 V
Impulse withstand voltage		
Protection	IP20	

CE RoHS USR CNR EAC

Mounting instructions

Rail		
Tool		ADO system tool

Compatible products

Accessories

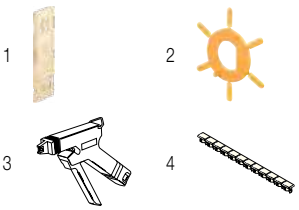

	Description		Color	Type	Part Numbers		Pkg qty	Weight (1 pce) g
1	Cable clamps	Used on products from 3 to 7 poles	Beige	PT1	1SSS299253R2800		20	1.60
		Used on products from 8 to 16 poles		PT2	1SSS299254R2800		20	4.80
2	Coding pegs		Yellow	COCF	1SNA199320R0400		10	1.00
3	Tools	Semi automatic tool		OUPAD	1SNA178944R0400		1	205.00
		Hand tool		OUMAD	1SNA179466R0600		1	29.00
4	Terminal block markers	Blank strip marker	White	RB-12W7	1SNA290455R0700		50	6.00

1SNC167014S0201

L 366 200 45 male plugs with flanges and inserts

ADO System® - 7.62 mm 0.3 in spacing

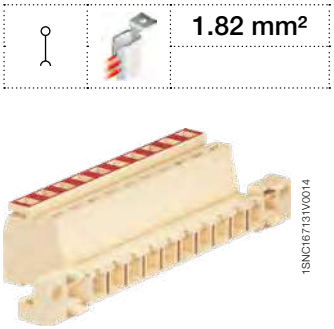

1.82 mm²

1SNC167131V0014

L 366 200 45

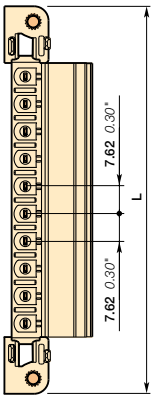

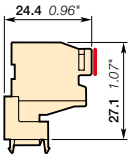

L = (nb poles x 7.62) + 31.5

7.62 mm 0.3 in spacing

Description

- With the TE Connectivity ADO System®, experience the fastest and most reliable connection on the market,
- Designed for rolling stock applications exposed to severe constrains (vibrations, shocks etc.),
- Up to 2 wires per connection,
- Red marking to identify wire size.

Ordering details

Description		Color	Type	Part Numbers		Pkg qty	Weight (1 pce) g
Male plugs	2 poles	Beige	FIC M.ADO.T1.FI.2P.NF	1SSS366202R4100		50	
	3 poles	Beige	FIC M.ADO.T1.FI.3P.NF	1SSS366203R4100		50	
	4 poles	Beige	FIC M.ADO.T1.FI.4P.NF	1SSS366204R4100		50	
	5 poles	Beige	FIC M.ADO.T1.FI.5P.NF	1SSS366205R4100		50	
	6 poles	Beige	FIC M.ADO.T1.FI.6P.NF	1SSS366206R4100		50	
	8 poles	Beige	FIC M.ADO.T1.FI.8P.NF	1SSS366208R4100		50	
	10 poles	Beige	FIC M.ADO.T1.FI.10P.NF	1SSS366210R4100		50	

Main technical data

Connecting capacity		NF F 63-808	NF F 63-296 NF F 63-826	EN 50306
ADO	Flexible without ferrule	0.6 ... 1.82 mm²		0.5 ... 1.5 mm²

	IEC	NF F 61-017
Rated current	16 A	16 A
Rated short-time withstand current (1s)	218.4 A	
Rated voltage	500 V	500 V
Impulse withstand voltage		
Protection	IP20	

CE RoHS USR CNR EAC

Mounting instructions

Rail		
Tool		ADO system tool

Compatible products

L 266 200 25

L 267 200 25

L 276 200 25

A

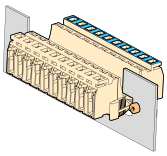

B

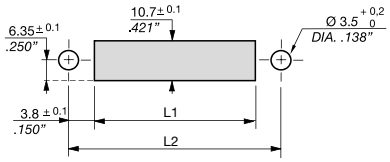

C

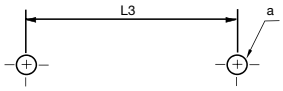

A: Panel feed-through or base mounting

B: Panel feed-through drilling
L1 = (nb poles x 7.62) + 15.24
L2 = (nb poles x 7.62) + 22.86

C: Base drilling
L3 = (nb poles x 7.62) + 22.86
a: M2.5 or M3 insert on panel

Accessories

1

2

3

	Description		Color	Type	Part Numbers		Pkg qty	Weight (1 pce) g
1	Cable clamps	Used on products from 3 to 7 poles	Beige	PT1	1SSS299253R2800		20	1.60
		Used on products from 8 to 16 poles		PT2	1SSS299254R2800		20	4.80
2	Tools	Semi automatic tool		OUPAD	1SNA178944R0400		1	205.00
		Hand tool		OUMAD	1SNA179466R0600		1	29.00
3	Terminal block markers	Blank strip marker	White	RB-12W7	1SNA290455R0700		50	6.00

1SNC167019S0201

L 367 200 45 male plugs with flanges and inserts

ADO System® - 7.62 mm 0.3 in spacing

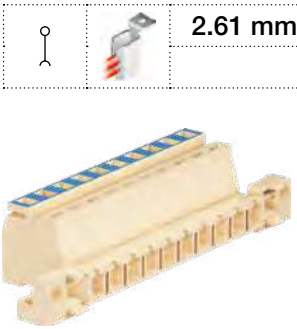

1SNC167132V0014

L 367 200 45

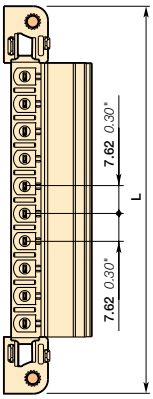

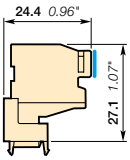

L = (nb poles x 7.62) + 31.5

7.62 mm 0.3 in spacing

2.61 mm²

Description

- With the TE Connectivity ADO System®, experience the fastest and most reliable connection on the market,
- Designed for rolling stock applications exposed to severe constrains (vibrations, shocks etc.),
- Up to 2 wires per connection,
- Blue marking to identify wire size.

Ordering details

Description		Color	Type	Part Numbers		Pkg qty	Weight (1 pce) g
Male plugs	2 poles	Beige	FIC M.ADO.T2.FI.2P.NF	1SSS367202R4100		50	
	3 poles	Beige	FIC M.ADO.T2.FI.3P.NF	1SSS367203R4100		50	
	4 poles	Beige	FIC M.ADO.T2.FI.4P.NF	1SSS367204R4100		50	
	5 poles	Beige	FIC M.ADO.T2.FI.5P.NF	1SSS367205R4100		50	
	6 poles	Beige	FIC M.ADO.T2.FI.6P.NF	1SSS367206R4100		50	
	8 poles	Beige	FIC M.ADO.T2.FI.8P.NF	1SSS367208R4100		50	
	10 poles	Beige	FIC M.ADO.T2.FI.10P.NF	1SSS367210R4100		50	

Main technical data

Connecting capacity		NF F 63-808	NF F 63-296 NF F 63-826	EN 50306
ADO	Flexible without ferrule	0.93 ... 2.61 mm²		1 ... 2.5 mm²

	IEC	NF F 61-017
Rated current	22 A	16 A
Rated short-time withstand current (1s)	313.2 A	
Rated voltage	500 V	500 V
Impulse withstand voltage		
Protection	IP20	

CE RoHS USR CNR EAC

Mounting instructions

Rail

Tool

ADO system tool

Compatible products

L 266 200 25

L 267 200 25

L 276 200 25

A

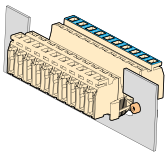

A: Panel feed-through or base mounting

B

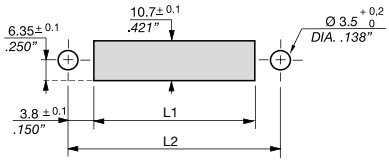

B: Panel feed-through drilling
L1 = (nb poles x 7.62) + 15.24
L2 = (nb poles x 7.62) + 22.86

C

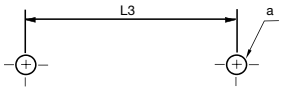

C: Base drilling
L3 = (nb poles x 7.62) + 22.86
a: M2.5 or M3 insert on panel

Accessories

1

2

3

	Description		Color	Type	Part Numbers		Pkg qty	Weight (1 pce) g
1	Cable clamps	Used on products from 3 to 7 poles	Beige	PT1	1SSS299253R2800		20	1.60
		Used on products from 8 to 16 poles		PT2	1SSS299254R2800		20	4.80
2	Tools	Semi automatic tool		OUPAD	1SNA178944R0400		1	205.00
		Hand tool		OUMAD	1SNA179466R0600		1	29.00
3	Terminal block markers	Blank strip marker	White	RB-12W7	1SNA290455R0700		50	6.00

1SNC167016S0201

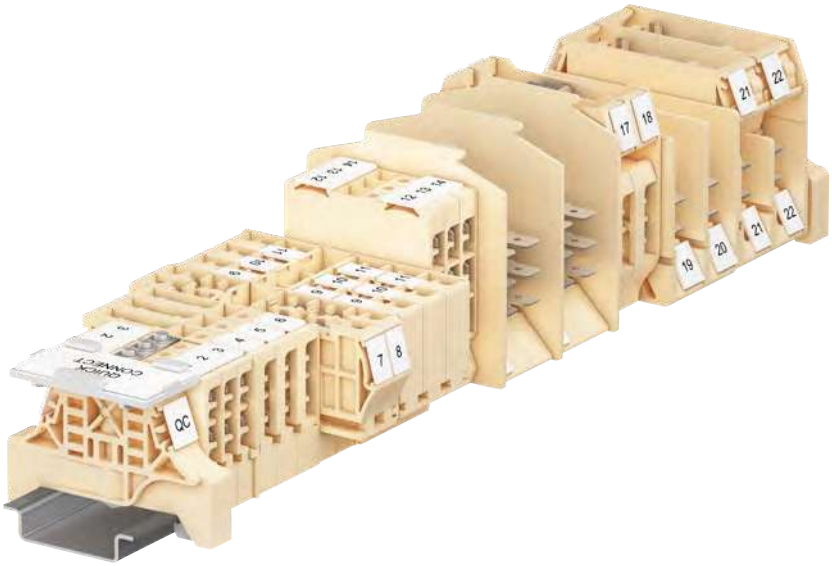
QC
QUICK CONNECT
7
8
19
20
21
22
17
18
21
22

Technologies presentation			138
Overview			140

With longitudinal quick-connect tabs

2.5 mm²	**HD2.5/6.2G.2G.1**	2 longitudinal tabs on each side	144
6 mm²	**HD6/8.2G.2G.1**	2 longitudinal tabs on each side	145
	HD6/8.2G.2G.2	2 longitudinal tabs and 2 vertical tabs	146
	HD6/7.5G	5 vertical tabs	147
	HD6/7.3G.2G	2 circuits-3 vertical tabs with jumper and 2 vertical tabs	148
	HD6/7.2G.3G	2 circuits-3 vertical tabs and 2 vertical tabs with jumper	149
	HD6/9.5G	5 vertical tabs	150
	HD6/9.3G.2G	2 circuits-3 vertical tabs with jumper and 2 vertical tabs	151
	HD6/9.2G.3G	2 circuits-3 vertical tabs and 2 vertical tabs with jumper	152

Stud-quick-connect

35 mm²	**HD6/22.F12G**	1 M6 stud - 12 quick-connect tabs	153
	HD6/30.F12G	1 M6 stud - 12 quick-connect tabs	154

Fuse holder

6 mm²	**HD6/14.SF.2G.2G**	for 5x20mm fuses	155

Component holder

6 mm²	**HD6/24.DH**	For screw and solder diode-6 tabs	156
	HD6/24.DH	For screw and solder diode-8 tabs	156
	HD6/14.DH	For screw and solder diode-2 tabs on each side	157
	HD6/14.DG	For solder diode or resistor-2 tabs on each side	158
	HD6/9.SDH.1	Disconnect with component holder plug	159
	HD6/14.SDH.1	Disconnect with component holder plug for screw & solder diode	160
	HD6/14.SDH	Disconnect with component holder plug for screw & solder diode type SKN2.5 or SKNa2	161

Multi level longitudinal quick-connect tabs

2.5 mm²	**HD2.5/6.3.3G.3G.1**	1 circuit - 6 tabs	162
	HD2.5/6.3.2G.2G.1.GG	Top circuit with 4 tabs - Bottom circuit with 2 tabs	163
	HD2.5/6.3.GG1.2G.2G	Top circuit with 2 tabs - Bottom circuit with 4 tabs	164
	HD2.5/6.3.GG.1.2GG	3 circuits - 1 tab each side	165
	HD2.5/6.3.2G.2G.1	1 Top circuit with 4 tabs	166
	HD2.5/6.3.GH.2G.H	1 top circuit with 1 tab & 1 solder connection - 1 bottom circuit with 2 tabs & 1 solder connection	167

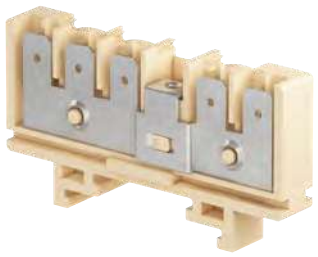

The historical technology for railway control and signal distribution

The Quick-connect technology allows to save wiring time and is a good solution for distribution of control signal. It can be used in case of limited space on the side (vertical version), when a high density connection is needed (horizontal version up to 6 connection per block) or when the power has to be distributed from power to control circuits (1 stud input / 12 quick-connect outputs.

CE RoHS EAC

Reliable in harsh conditions

Continuous operation guaranteed for rolling stock

- Environmental tests: aging, corrosion, flammability, toxicity (I2F2, V0, HL3 R22)
- Mechanical tests: vibration and shock.

Improve installation efficiency

Large and flexible offering

- Top or side connection
- Up to 6 connections in 1 block
- Easy distribution thanks to hybrid versions with both fast-on and stud connections
- Circuit protection thanks to component holder.

1SNC167089S0201

Features

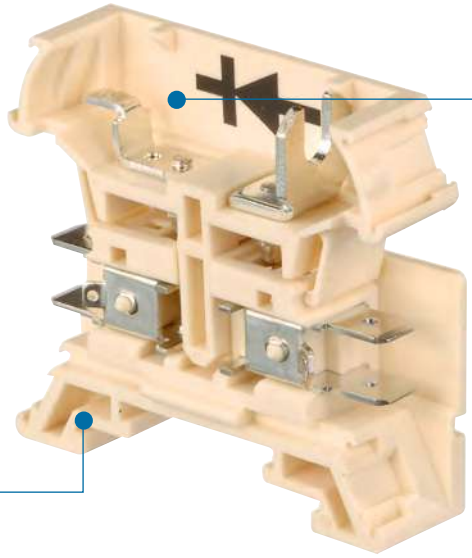

Area dedicated to component soldering and screwing (SKN diodes or resistors)

Compatible with both CCTU and DIN3 rails

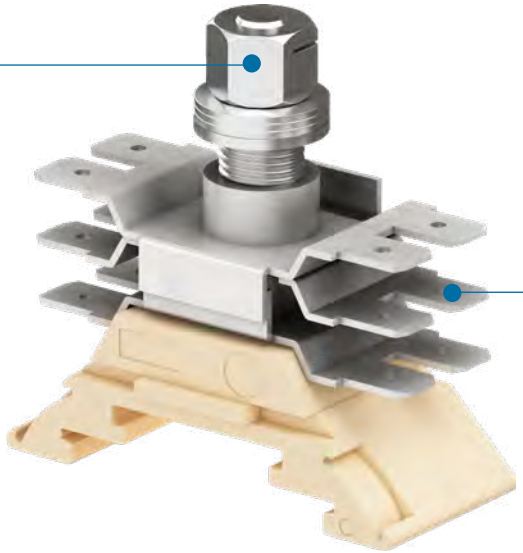

High density power distribution (35 mm² / 155 A)

Control circuits (2.5 mm² / 16 A)

5

1SNC167089S0201

Range overview from 2.5 up to 6 mm²

Feed-through
From 2.5 to 6 mm²

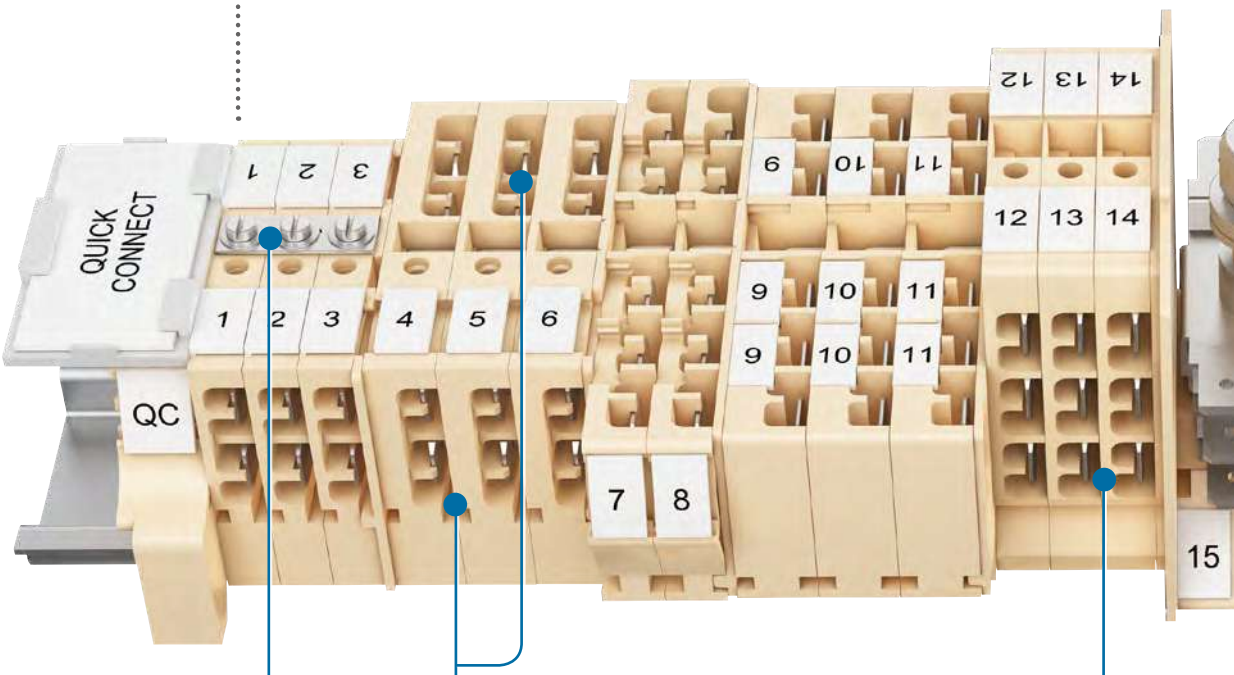

Perforated jumpering bars
Easy to install by cutting out the precut partitions

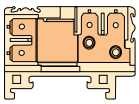

Top or side connection
Flexibility of the connection angle

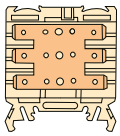

High connection density
Up to 6 connections in 6 mm spacing

Distribution
35 mm² / 2.5 mm²

Component holder
From 2.5 to 6 mm²

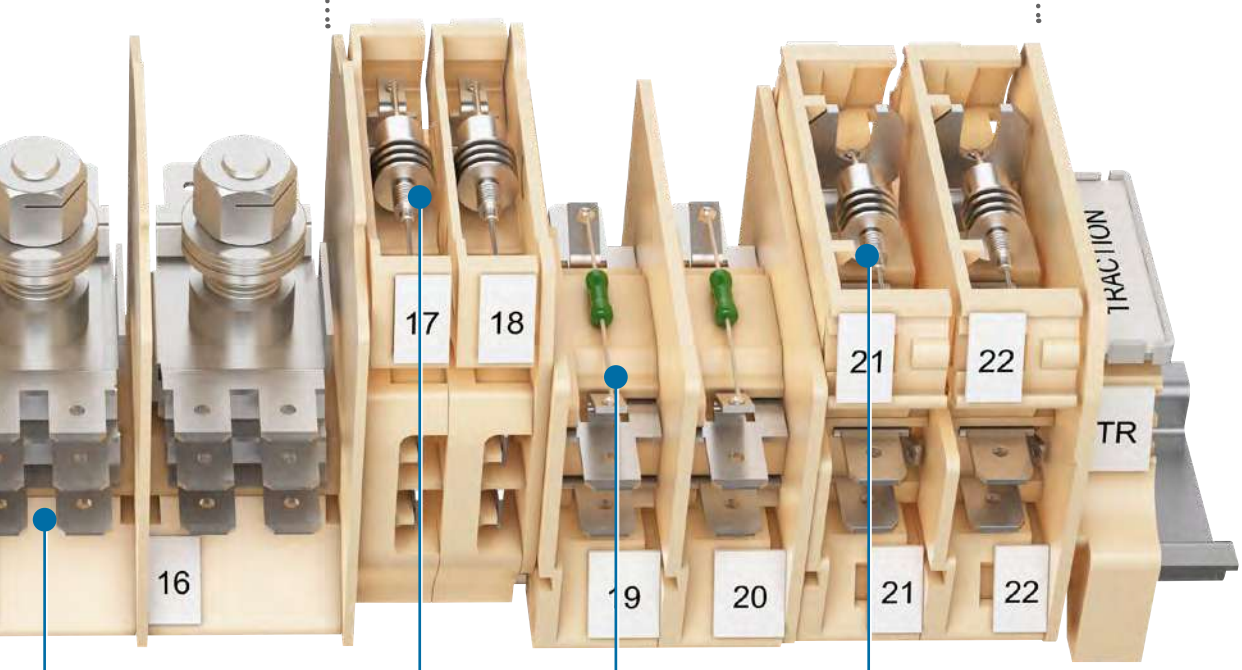

Easy distribution of up to 12 outputs
With quick-connect / stud hybrid terminal blocks

Component holders
Easy to solder diodes or resistors for circuit protection

1SNC167093S0201

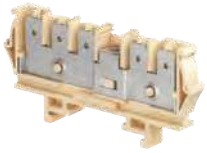
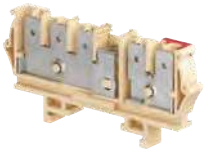

Feed-through

7 mm spacing

Section					
2.5 mm²	HD2.5/6.2G.2G.1				
6 mm²		HD6/8.2G.2G.1	HD6/8.2G.2G.2	HD6/7.5G	HD6/7.3G.2G

Stud-quick-connect

Fuse holder

Section				
6 mm²			HD6/14.SF.2G.2G	HD6/24.DH
35 mm² / 2.5 mm²	HD6/22.F12G			
35 mm² / 6 mm²		HD6/30.F12G		

Multi level longitudinal quick-connect tabs-Feed-through

Section				
2.5 mm²	HD2.5/6.3.3G.3G.1	HD2.5/6.3.2G.2G.1.GG	HD2.5/6.3.GG1.2G.2G	HD2.5/6.3.GG.1.2GG

Clamp - Channels for jumpering or testing - Test socket - Blown-fuse indicator

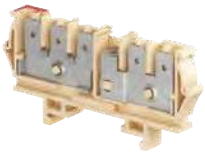
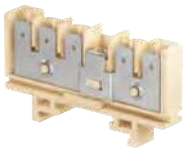
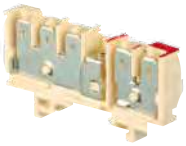
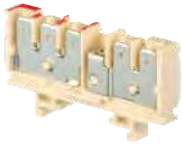

9 mm spacing

HD6/7.2G.3G	HD6/9.5G	HD6/9.3G.2G	HD6/9.2G.3G

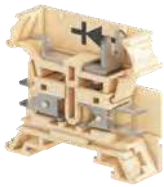

Component holder

HD6/14.DH	HD6/14.DG	HD6/9.SDH.1	HD6/14.SDH.1	HD6/14.SDH

HD2.5/6.3.2G.2G.1	HD2.5/6.3.GH.2G.H

1SNC167094S0201

HD2.5/6.2G.2G.1 Quick connect terminal blocks

Feed-through - 6 mm 0.236 in spacing

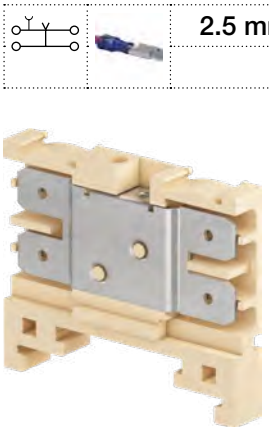

HD2.5/6.2G.2G.1

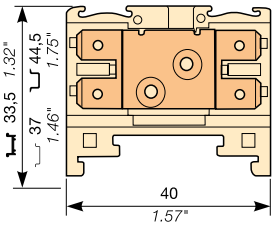

6 mm 0.236 in spacing

2.5 mm²

Description

- Connection by 2 longitudinal tabs for quick-connect 6.3 x 0.8 mm 0.248 x 0.031 in on each side,
- Possibility of testing,
- Two jumpering options: 6 mm 0.236 in spacing with BJS61 and 7 mm 0.276 in (adding end section) with BJH7,
- Use of jumper bars requires to cut out the precut partition,
- NF F 61-017 designation: BB0006-2G2G (1SNA160487R2500) or BB0007-2G2G (1SNA160487R2500 + FEH3).

Ordering details

Description		Color	Type	Part Numbers		Pkg qty	Weight (1 pce) g
4 tabs	1 circuit	Beige	HD2.5/6.2G.2G.1	1SNA160487R2500		50	7.00

Main technical data

Connecting capacity		NF C	DIN	NF F 61-017
1 conductor per clamp	Quick-connect: 6.3 x 0.8 mm	0.34 … 2.5 mm²		
Rated voltage	V AC	(Cat. C) 250 V	(Cat. C) 125 V	250 V
	V DC	(Cat. C) 250 V	(Cat. C) 150 V	250 V
Rated current		25 A	26 A	20 A
Rated cross section		2.5 mm²	2.5 mm²	

Mounting instructions

Rail		Type 2, TH 35-7.5, TH 35-15

CE RoHS EAC

Accessories

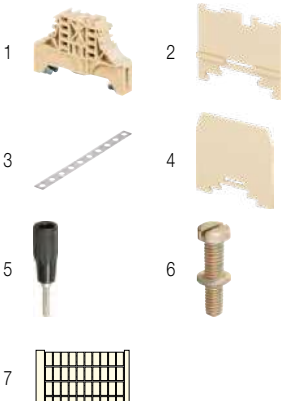

	Description			Color	Type	Part Numbers		Pkg qty	Weight (1 pce) g
1	End stops	10 mm	0.394 in	Beige	BAM2	1SNA296351R0000		50	12.00
		10.7 mm	0.421 in		BAH24	1SNA168355R1300		50	12.00
2	End sections	1 mm	0.039 in	Beige	FEH3	1SNA198352R0700		20	1.10
3	Jumper bars	2 poles	32 A (IEC)		BJS61-2	1SNA168481R2300		10	1.80
		3 poles	32 A (IEC)		BJS61-3	1SNA168482R2400		10	1.80
		4 poles	32 A (IEC)		BJS61-4	1SNA168483R2500		10	1.80
		5 poles	32 A (IEC)		BJS61-5	1SNA168484R2600		10	1.80
		10 poles	32 A (IEC)		BJS61-10	1SNA168485R2700		10	2.00
		2 poles			BJH7-2	1SNA168486R2000		10	0.50
		3 poles			BJH7-3	1SNA168487R2100		10	0.80
		10 poles			BJH7-10	1SNA168490R0000		10	3.00
4	Circuit separators	1.6 mm	0.063 in	Beige	SCH3	1SNA198692R2500		10	4.30
5	Test plugs	DIA 2 mm	0.079 in	Black	FC2	1SNA007865R2600		100	2.00
6	Fastening kits	Screw M2.5X5 for jumper bar BJH			VSJ6	1SNA167735R2700		1	
		Washer for screw VSJ			RDJ6	1SNA173241R0600		1000	0.10
7	Terminal block markers	Blank card		White	RC610	1SNA233000R0100		10	7.50

1SNC167022S0201

HD6/8.2G.2G.1 Quick connect terminal blocks

Feed-through - 8 mm 0.315 in spacing

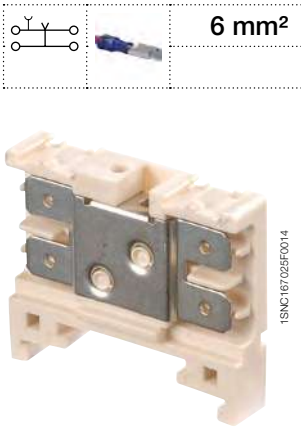

HD6/8.2G.2G.1

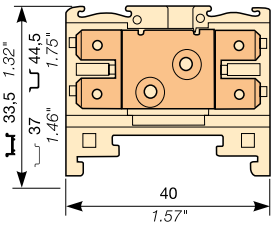

8 mm 0.315 in spacing

6 mm²

Description

- Connection by 2 longitudinal tabs for quick-connect 6.3 x 0.8 mm 0.248 x .031 in on each side,
- Possibility of testing,
- Two jumpering options: 8 mm 0.315 in spacing with BJH8 and 9 mm 0.354 in spacing (adding end section) with BJH9,
- Use of jumper bars requires to cut out the precut partition,
- NF F 61-017 designation: BB0008-2G2G (1SNA160606R1400) or BB0009-2G2G (1SNA160606R1400 + FEH3).

Ordering details

Description		Color	Type	Part Numbers		Pkg qty	Weight (1 pce) g
4 tabs	1 circuit	Beige	HD6/8.2G.2G.1	1SNA160606R1400		50	8.00

Main technical data

Connecting capacity		NF C	DIN	NF F 61-017
1 conductor per clamp	Quick-connect: 6.3 x 0.8 mm	0.34 ... 6 mm²		
Rated voltage	V AC	(Cat. C) 250 V	(Cat. C) 250 V	250 V
	V DC	(Cat. C) 250 V	(Cat. C) 300 V	250 V
Rated current		25 A	26 A	20 A
Rated cross section		6 mm²	6 mm²	

Mounting instructions

Rail		Type 2, TH 35-7.5, TH 35-15

CE RoHS EAC

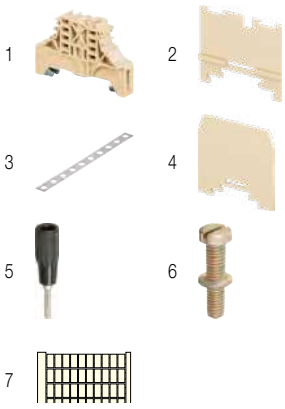

Accessories

	Description				Color	Type	Part Numbers		Pkg qty	Weight (1 pce) g
1	End stops	10 mm	0.394 in		Beige	BAM2	1SNA296351R0000		50	12.00
		10.7 mm	0.421 in			BAH24	1SNA168355R1300		50	12.00
2	End sections	1 mm	0.039 in		Beige	FEH3	1SNA198352R0700		20	1.10
3	Jumper bars	2 poles				BJH8-2	1SNA168456R0100		10	0.60
		3 poles				BJH8-3	1SNA168457R0200		10	0.90
		4 poles				BJH8-4	1SNA168458R1300		10	1.30
		5 poles				BJH8-5	1SNA168459R1400		10	1.60
		10 poles				BJH8-10	1SNA168356R1400		10	3.40
		2 poles				BJH9-2	1SNA168460R1100		10	1.60
		3 poles				BJH9-3	1SNA168461R0600		10	1.00
		4 poles				BJH9-4	1SNA168462R0700		10	1.40
		5 poles				BJH9-5	1SNA168463R0000		10	1.80
		10 poles				BJH9-10	1SNA168357R1500		10	3.80
4	Circuit separators	1.6 mm	0.063 in		Beige	SCH3	1SNA198692R2500		10	4.30
5	Test plugs	DIA 2 mm 0.079 in			Black	FC2	1SNA007865R2600		100	2.00
6	Fastening kits	Screw M2.5X5 for jumper bar BJH				VSJ6	1SNA167735R2700		1	
		Washer for screw VSJ				RDJ6	1SNA173241R0600		1000	0.10
7	Terminal block markers	Blank card			White	RC610	1SNA233000R0100		10	7.50
						RC810	1SNA234000R0200		10	8.20

5

1SNC167075S0201

HD6/8.2G.2G.2 Quick connect terminal blocks

Feed-through - 8 mm 0.315 in spacing

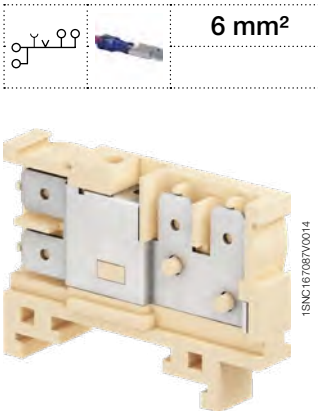

HD6/8.2G.2G.2

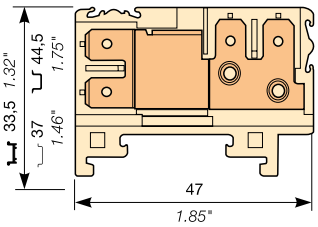

8 mm 0.315 in spacing

6 mm²

Description

- Connection by 2 longitudinal tabs on one side and 2 vertical tabs on the other side for quick-connect 6.3 x 0.8 mm 0.248 x 0.031 in,
- Possibility of testing and transverse connection,
- Use of jumper bars requires to cut out the precut partition.

Ordering details

Description		Color	Type	Part Numbers		Pkg qty	Weight (1 pce) g
4 tabs	1 circuit	Beige	HD6/8.2G.2G.2	1SNA160619R1000		50	11.00

Main technical data

Connecting capacity		NF C	DIN	NF F 61-017
1 conductor per clamp	Quick-connect: 6.3 x 0.8 mm	0.34 … 6 mm²		
Rated voltage	V AC	(Cat. C) 400 V	(Cat. C) 380 V	380 V
	V DC	(Cat. C) 250 V	(Cat. C) 450 V	380 V
Rated current		25 A	26 A	20 A
Rated cross section		6 mm²	6 mm²	

Mounting instructions

Rail		Type 2, TH 35-7.5, TH 35-15

CE RoHS EAC

Accessories

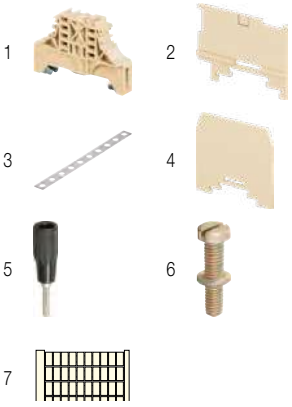

	Description			Color	Type	Part Numbers		Pkg qty	Weight (1 pce) g
1	**End stops**	10 mm	0.394 in	Beige	BAM2	1SNA296351R0000		50	12.00
		10.7 mm	0.421 in		BAH24	1SNA168355R1300		50	12.00
2	**End sections**	1 mm	0.039 in	Beige	FEH4	1SNA193878R2200		20	1.80
3	**Jumper bars**	2 poles			BJH8-2	1SNA168456R0100		10	0.60
		3 poles			BJH8-3	1SNA168457R0200		10	0.90
		4 poles			BJH8-4	1SNA168458R1300		10	1.30
		5 poles			BJH8-5	1SNA168459R1400		10	1.60
		10 poles			BJH8-10	1SNA168356R1400		10	3.40
4	**Circuit separators**	1.6 mm	0.063 in	Beige	SCH3	1SNA198692R2500		10	4.30
5	**Test plugs**	DIA 2 mm 0.079 in		Black	FC2	1SNA007865R2600		100	2.00
6	**Fastening kits**	Screw M2.5X5 for jumper bar BJH			VSJ6	1SNA167735R2700		1	
		Washer for screw VSJ			RDJ6	1SNA173241R0600		1000	0.10
7	**Terminal block markers**	Blank card		White	RC610	1SNA233000R0100		10	7.50
					RC810	1SNA234000R0200		10	8.20

HD 6/7.5G Quick connect terminal blocks

Feed-through - 7 mm 0.276 in spacing

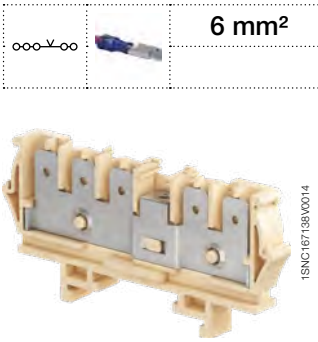

HD 6/7.5G

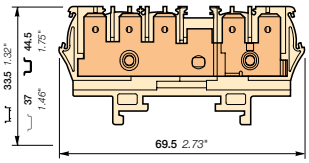

7 mm 0.276 in spacing

6 mm²

Description

- Connection by 5 vertical tabs for quick-connect 6.3 x 0.8 mm 0.248 x 0.031 in,
- Possibility of transverse connection,
- Use of jumper bars requires to cut out the precut partition.

Ordering details

Description		Color	Type	Part Numbers		Pkg qty	Weight (1 pce) g
5 tabs	1 circuit	Beige	HD6/7.5G	1SNA400766R1500		25	

Main technical data

Connecting capacity		NF C	DIN	NF F 61-017
1 conductor per clamp	Quick-connect: 6.3 x 0.8 mm	0.34 … 6 mm²		
Rated voltage	V AC	320 V	320 V	320 V
	V DC	320 V	320 V	320 V
Rated current		25 A	25 A	20 A
Rated cross section		6 mm²	6 mm²	

Mounting instructions

Rail		Type 2, TH 35-7.5, TH 35-15

CE RoHS EAC

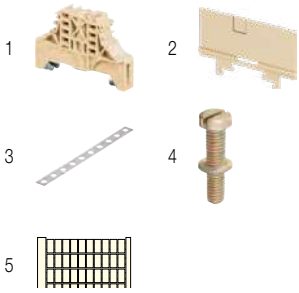

Accessories

	Description				Color	Type	Part Numbers		Pkg qty	Weight (1 pce) g
1	**End stops**	10 mm	0.394 in		Beige	BAM2	1SNA296351R0000		50	12.00
		10.7 mm	0.421 in			BAH24	1SNA168355R1300		50	12.00
2	**End sections**	1 mm	0.039 in		Beige	FEHD1	1SNA199400R0600		20	2.00
3	**Jumper bars**	2 poles				BJH7-2	1SNA168486R2000		10	0.50
		3 poles				BJH7-3	1SNA168487R2100		10	0.80
		10 poles				BJH7-10	1SNA168490R0000		10	3.00
4	**Fastening kits**	Screw M2.5X5 for jumper bar BJH				VSJ6	1SNA167735R2700		1	
		Washer for screw VSJ				RDJ6	1SNA173241R0600		1000	0.10
5	**Terminal block markers**	Blank card			White	RC610	1SNA233000R0100		10	7.50

1SNC167054S0201

HD 6/7.3G.2G Quick connect terminal blocks

Feed-through - 7 mm 0.276 in spacing

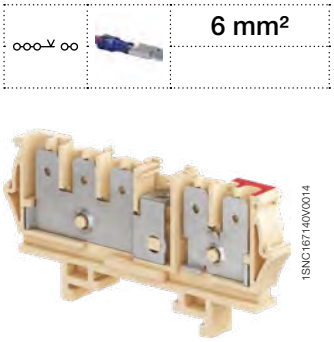

HD 6/7.3G.2G

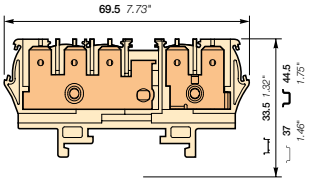

7 mm 0.276 in spacing

6 mm²

Description

- 2 circuits: 1 circuit with 3 vertical tabs for quick-connect 6.3 x 0.8 mm 0.248 x 0.031 in, possibility of transverse connection and 1 circuit with 2 vertical tabs for quick-connect 6.3 x 0.8 mm 0.248 x 0.031 in, marked in red,
- Use of jumper bars requires to cut out the precut partition.

Ordering details

Description		Color	Type	Part Numbers		Pkg qty	Weight (1 pce) g
5 tabs	2 circuits	Beige	HD6/7.3G.2G	1SNA400767R1600		25	

Main technical data

Connecting capacity		NF C	DIN	NF F 61-017
1 conductor per clamp	Quick-connect: 6.3 x 0.8 mm	0.34 … 6 mm²		
Rated voltage	V AC	320 V	320 V	320 V
	V DC	320 V	320 V	320 V
Rated current		25 A	25 A	20 A
Rated cross section		6 mm²	6 mm²	

Mounting instructions

Rail		Type 2, TH 35-7.5, TH 35-15

CE RoHS EAC

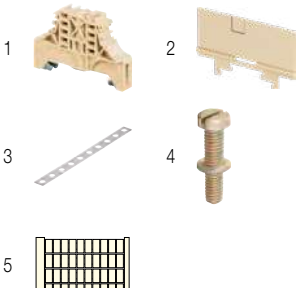

Accessories

	Description				Color	Type	Part Numbers		Pkg qty	Weight (1 pce) g
1	**End stops**	10 mm	0.394 in		Beige	BAM2	1SNA296351R0000		50	12.00
		10.7 mm	0.421 in			BAH24	1SNA168355R1300		50	12.00
2	**End sections**	1 mm	0.039 in		Beige	FEHD1	1SNA199400R0600		20	2.00
3	**Jumper bars**	2 poles				BJH7-2	1SNA168486R2000		10	0.50
		3 poles				BJH7-3	1SNA168487R2100		10	0.80
		10 poles				BJH7-10	1SNA168490R0000		10	3.00
4	**Fastening kits**	Screw M2.5X5 for jumper bar BJH				VSJ6	1SNA167735R2700		1	
		Washer for screw VSJ				RDJ6	1SNA173241R0600		1000	0.10
5	**Terminal block markers**	Blank card			White	RC610	1SNA233000R0100		10	7.50

HD 6/7.2G.3G Quick connect terminal blocks

Feed-through - 7 mm 0.276 in spacing

6 mm²

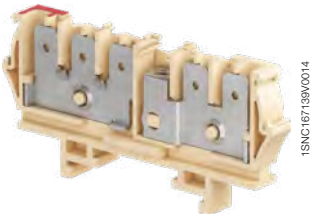

HD 6/7.2G.3G

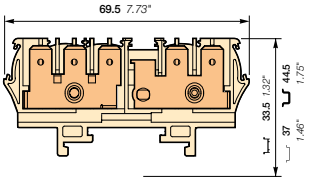

7 mm 0.276 in spacing

Description

- 2 circuits: 1 circuit with 3 vertical tabs for quick-connect 6.3 x 0.8 mm 0.248 x 0.031 in, marked in red and 1 circuit with 2 vertical tabs for quick-connect 6.3 x 0.8 mm 0.248 x 0.031 in, possibility of transverse connection,
- Use of jumper bars requires to cut out the precut partition.

Ordering details

Description		Color	Type	Part Numbers		Pkg qty	Weight (1 pce) g
5 tabs	2 circuits	Beige	HD6/7.2G.3G	1SNA400768R2700		25	

Main technical data

Connecting capacity		NF C	DIN	NF F 61-017
1 conductor per clamp	Quick-connect: 6.3 x 0.8 mm	0.34 … 6 mm²		
Rated voltage	V AC	320 V	320 V	320 V
	V DC	320 V	320 V	320 V
Rated current		25 A	25 A	20 A
Rated cross section		6 mm²	6 mm²	

Mounting instructions

Rail		Type 2, TH 35-7.5, TH 35-15

CE RoHS EAC

Accessories

	Description			Color	Type	Part Numbers		Pkg qty	Weight (1 pce) g
1	**End stops**	10 mm	0.394 in	Beige	BAM2	1SNA296351R0000		50	12.00
		10.7 mm	0.421 in		BAH24	1SNA168355R1300		50	12.00
2	**End sections**	1 mm	0.039 in	Beige	FEHD1	1SNA199400R0600		20	2.00
3	**Jumper bars**	2 poles			BJH7-2	1SNA168486R2000		10	0.50
		3 poles			BJH7-3	1SNA168487R2100		10	0.80
		10 poles			BJH7-10	1SNA168490R0000		10	3.00
4	**Fastening kits**	Screw M2.5X5 for jumper bar BJH			VSJ6	1SNA167735R2700		1	
		Washer for screw VSJ			RDJ6	1SNA173241R0600		1000	0.10
5	**Terminal block markers**	Blank card		White	RC610	1SNA233000R0100		10	7.50

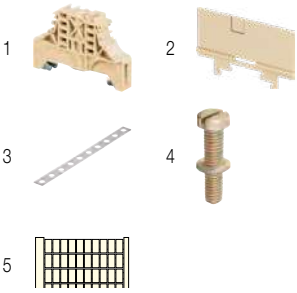

1SNC167052S0201

HD6/9.5G Quick connect terminal blocks

Feed-through - 9 mm 0.354 in spacing

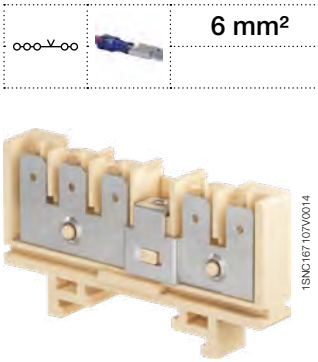

HD6/9.5G

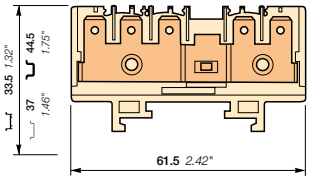

9 mm 0.354 in spacing

6 mm²

Description

- Connection by 5 vertical tabs for quick-connect 6.3 x 0.8 mm 0.248 x 0.031 in,
- Possibility of testing and transverse connection,
- Use of jumper bars requires to cut out the precut partition,
- NF F 61-017 designation: BC0009-3G2G (1SNA160621R0200).

Ordering details

Description		Color	Type	Part Numbers		Pkg qty	Weight (1 pce) g
5 tabs	1 circuit	Beige	HD6/9.5G	1SNA160621R0200		25	13.00

Main technical data

Connecting capacity		NF C	DIN	NF F 61-017
1 conductor per clamp	Quick-connect: 6.3 x 0.8 mm	0.34 … 6 mm²		
Rated voltage	V AC	(Cat. C) 400 V	(Cat. C) 380 V	380 V
	V DC	(Cat. C) 250 V	(Cat. C) 450 V	380 V
Rated current		25 A	26 A	20 A
Rated cross section		6 mm²	6 mm²	

Mounting instructions

Rail		Type 2, TH 35-7.5, TH 35-15

CE RoHS EAC

Accessories

	Description			Color	Type	Part Numbers		Pkg qty	Weight (1 pce) g
1	**End stops**	10 mm	0.394 in	Beige	BAM2	1SNA296351R0000		50	12.00
		10.7 mm	0.421 in		BAH24	1SNA168355R1300		50	12.00
2	**End sections**	1 mm	0.039 in	Beige	FEHD1	1SNA199400R0600		20	2.00
3	**Jumper bars**	2 poles			BJH9-2	1SNA168460R1100		10	1.60
		3 poles			BJH9-3	1SNA168461R0600		10	1.00
		4 poles			BJH9-4	1SNA168462R0700		10	1.40
		5 poles			BJH9-5	1SNA168463R0000		10	1.80
		10 poles			BJH9-10	1SNA168357R1500		10	3.80
4	**Test plugs**	DIA 2 mm 0.079 in		Black	FC2	1SNA007865R2600		100	2.00
5	**Fastening kits**	Screw M2.5X5 for jumper bar BJH			VSJ6	1SNA167735R2700		1	
		Washer for screw VSJ			RDJ6	1SNA173241R0600		1000	0.10
6	**Terminal block markers**	Blank card		White	RC510	1SNA231000R0700		10	5.20

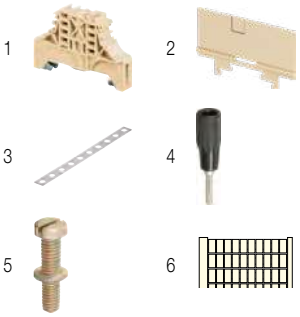

1SNC167074S0201

HD6/9.3G.2G Quick connect terminal blocks

Feed-through - 9 mm 0.354 in spacing

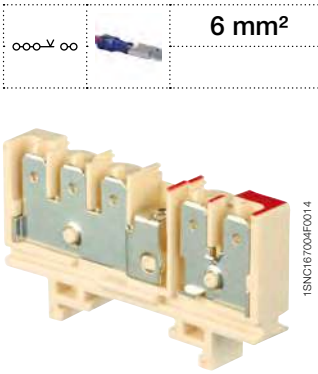

1SNC167004F0014

HD6/9.3G.2G

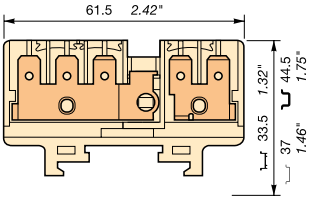

9 mm 0.354 in spacing

6 mm²

Description

- 2 circuits: 1 circuit with 3 vertical tabs for quick-connect 6.3 x 0.8 mm 0.248 x 0.031 in, possibility of testing and transverse connection and 1 circuit with 2 vertical tabs for quick-connect 6.3 x 0.8 mm 0.248 x 0.031 in, marked in red,
- Use of jumper bars requires to cut out the precut partition,
- NF F 61-017 designation: BK0009-3Ge/2G (1SNA160563R0000).

Ordering details

Description		Color	Type	Part Numbers		Pkg qty	Weight (1 pce) g
5 tabs	2 circuits	Beige	HD6/9.3G.2G	1SNA160563R0000		25	13.00

Main technical data

Connecting capacity		NF C	DIN	NF F 61-017
1 conductor per clamp	Quick-connect: 6.3 x 0.8 mm	0.34 … 6 mm²		
Rated voltage	V AC	(Cat. C) 400 V	(Cat. C) 380 V	380 V
	V DC	(Cat. C) 250 V	(Cat. C) 450 V	380 V
Rated current		25 A	26 A	20 A
Rated cross section		6 mm²	6 mm²	

Mounting instructions

Rail		Type 2, TH 35-7.5, TH 35-15

CE RoHS EAC

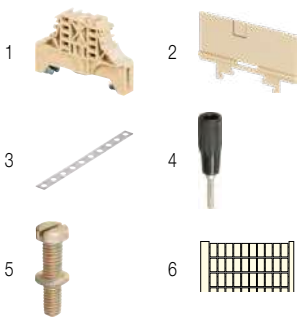

Accessories

	Description			Color	Type	Part Numbers		Pkg qty	Weight (1 pce) g
1	**End stops**	10 mm	0.394 in	Beige	BAM2	1SNA296351R0000		50	12.00
		10.7 mm	0.421 in		BAH24	1SNA168355R1300		50	12.00
2	**End sections**	1 mm	0.039 in	Beige	FEHD1	1SNA199400R0600		20	2.00
3	**Jumper bars**	2 poles			BJH9-2	1SNA168460R1100		10	1.60
		3 poles			BJH9-3	1SNA168461R0600		10	1.00
		4 poles			BJH9-4	1SNA168462R0700		10	1.40
		5 poles			BJH9-5	1SNA168463R0000		10	1.80
		10 poles			BJH9-10	1SNA168357R1500		10	3.80
4	**Test plugs**	DIA 2 mm 0.079 in		Black	FC2	1SNA007865R2600		100	2.00
5	**Fastening kits**	Screw M2.5X5 for jumper bar BJH			VSJ6	1SNA167735R2700		1	
		Washer for screw VSJ			RDJ6	1SNA173241R0600		1000	0.10
6	**Terminal block markers**	Blank card		White	RC510	1SNC167077S0201		10	5.20

1SNC167077S0201

HD6/9.2G.3G Quick connect terminal blocks

Feed-through - 9 mm 0.354 in spacing

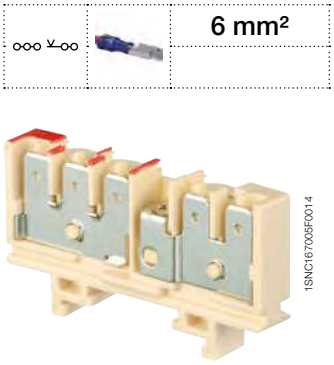

HD6/9.2G.3G

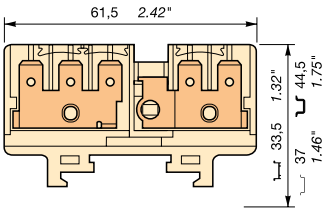

9 mm 0.354 in spacing

6 mm²

Description

- 2 circuits: 1 circuit with 3 vertical tabs for quick-connect 6.3 x 0.8 mm 0.248 x 0.031 in, marked in red and 1 circuit with 2 vertical tabs for quick-connect 6.3 x 0.8 mm 0.248 x 0.031 in, possibility of testing and transverse connection,
- Use of jumper bars requires to cut out the precut partition,
- NF F 61-017 designation: BK0009-3G/2Ge (1SNA160564R0100).

Ordering details

Description		Color	Type	Part Numbers		Pkg qty	Weight (1 pce) g
5 tabs	2 circuits	Beige	HD6/9.2G.3G	1SNA160564R0100		25	13.00

Main technical data

Connecting capacity		NF C	DIN	NF F 61-017
1 conductor per clamp	Quick-connect: 6.3 x 0.8 mm	0.34 … 6 mm²		
Rated voltage	V AC	(Cat. C) 400 V	(Cat. C) 380 V	380 V
	V DC	(Cat. C) 250 V	(Cat. C) 450 V	380 V
Rated current		25 A	26 A	20 A
Rated cross section		6 mm²	6 mm²	

Mounting instructions

Rail		Type 2, TH 35-7.5, TH 35-15

CE RoHS EAC

Accessories

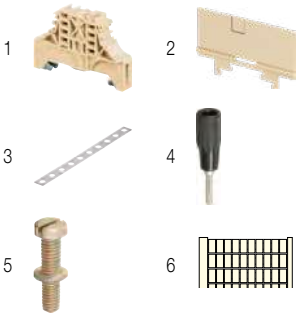

	Description			Color	Type	Part Numbers		Pkg qty	Weight (1 pce) g
1	**End stops**	10 mm	0.394 in	Beige	BAM2	1SNA296351R0000		50	12.00
		10.7 mm	0.421 in		BAH24	1SNA168355R1300		50	12.00
2	**End sections**	1 mm	0.039 in	Beige	FEHD1	1SNA199400R0600		20	2.00
3	**Jumper bars**	2 poles			BJH9-2	1SNA168460R1100		10	1.60
		3 poles			BJH9-3	1SNA168461R0600		10	1.00
		4 poles			BJH9-4	1SNA168462R0700		10	1.40
		5 poles			BJH9-5	1SNA168463R0000		10	1.80
		10 poles			BJH9-10	1SNA168357R1500		10	3.80
4	**Test plugs**	DIA 2 mm 0.079 in		Black	FC2	1SNA007865R2600		100	2.00
5	**Fastening kits**	Screw M2.5X5 for jumper bar BJH			VSJ6	1SNA167735R2700		1	
		Washer for screw VSJ			RDJ6	1SNA173241R0600		1000	0.10
6	**Terminal block markers**	Blank card		White	RC510	1SNA231000R0700		10	5.20

HD6/22.F12G stud terminal blocks

Feed-through - 22 mm 0.866 in spacing

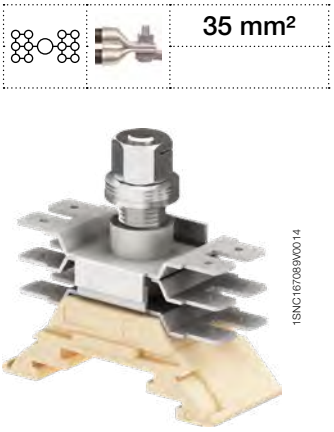

1SNC167089V0014

HD6/22.F12G

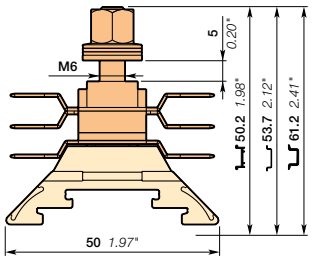

22 mm 0.866 in spacing

Description

- 115 A main circuit: 1 stud terminal M6 x 31.5 mm 1.24 in,
- Equipment: H 130 self locking nut + TREP 3L washer + washer,
- Branch by 12 tabs for quick-connect 6.3 x 0.8 mm 0.248 x 0.031 in: 16 A maximum per tab,
- NF F 61-017 designation: BF0025-1F12G.

Ordering details

Description		Color	Type	Part Numbers		Pkg qty	Weight (1 pce) g
1 stud M6 and 12 tabs	1 circuit	Beige	HD6/22.F12G	1SNA400782R0000		10	55.00

Main technical data

Connecting capacity		NF C	DIN	NF F 61-017
Wire size	Lug (NF C 20-130)	1.5 ... 35 mm²		
	Lug (DIN 46235 / 46234)		2.5 ... 35 mm²	
	Quick-connect: 6.3 x 0.8 mm	0.34 ... 2.5 mm²		
Rated voltage	V AC			400 V
	V DC			500 V
Rated current				115/16 A
Rated cross section		35 mm²		

Mounting instructions

Rail		Type 2, TH 35-7.5, TH 35-15
Tool		Wrench Ø 10 mm Ø 0.394 in
Torque		5.3 N.m 46.9 lb.in

CE RoHS EAC

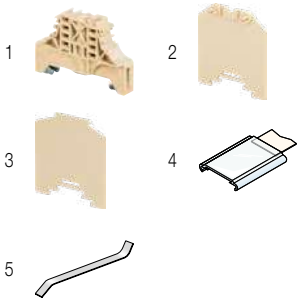

Accessories

	Description			Color	Type	Part Numbers		Pkg qty	Weight (1 pce) g
1	**End stops**	10 mm	0.394 in	Beige	BAM2	1SNA296351R0000		50	12.00
		8.2 mm	0.323 in		BAH22	1SNA164655R0400		50	10.00
2	**End sections**	1.5 mm	0.059 in	Beige	FJH501	1SNA199411R1400		25	6.50
3	**Circuit separators**	1.2 mm	0.047 in	Beige	SCH8	1SNA199412R1500		25	4.80
4	**Protecting covers**	Length 500 mm 19.70 in		Transparent	CPM	1SNA187312R1400		1	25.00
				Beige	CPM	1SNA197312R1600		10	25.00
5	**Terminal block markers**	Blank strip label for CPM		White	RTC	1SNA163156R2700		1	10.00
		Label holder			PEFH	1SNA163497R1600		10	
		Blank label for PEFH			RPED	1SNA163518R2200		1	12.00
		Blank card		White	RC610	1SNA233000R0100		10	7.50

5

1SNC167036S0201

HD6/30.F12G stud terminal blocks

Feed-through - 30 mm 1.18 in spacing

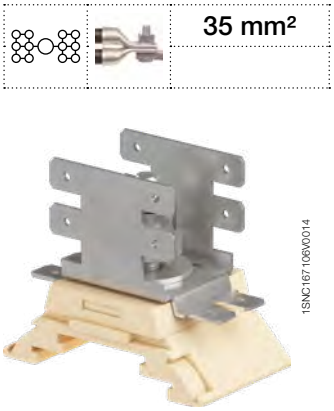

1SNC167106V0014

HD6/30.F12G

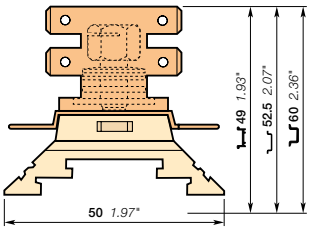

30 mm 1.18 in spacing

Description

- 155 A main circuit: 1 stud terminal M6 x 19.5 mm 0.768 in,
- Equipment: H 130 self locking nut + TREP 3L washer + washer,
- Branch by 12 tabs for quick-connect 6.3 x 0.8 mm 0.248 x 0.031 in: 16 A maximum per tab,
- NF F 61-017 designation: BF31.2-1F12G (1SNA295015R1200 + SCH8).

Ordering details

Description		Color	Type	Part Numbers		Pkg qty	Weight (1 pce) g
1 stud M6 and 12 tabs	1 cirrcuit	Beige	HD6/30.F12G	1SNA295015R1200		10	42.00

Main technical data

Connecting capacity		NF C	DIN	NF F 61-017
Wire size	Lug (NF C 20-130)	1.5 ... 35 mm²		
	Lug (DIN 46235 / 46234)		2.5 ... 35 mm²	
	Quick-connect: 6.3 x 0.8 mm	0.34 ... 6 mm²		
Rated voltage	V AC	(Cat. C) 750 V	(Cat. C) 750 V	380 V
	V DC	(Cat. C) 750 V	(Cat. C) 900 V	500 V
Rated current				155/16 A
Rated cross section		35 mm²		

Mounting instructions

Rail		Type 2, TH 35-7.5, TH 35-15
Tool		Wrench Ø 10 mm Ø 0.394 in
Torque		5.3 N.m 46.9 lb.in

CE RoHS EAC

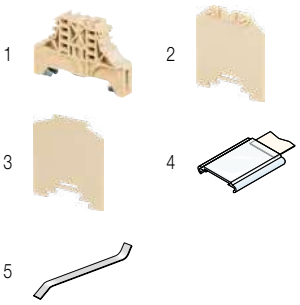

Accessories

	Description				Color	Type	Part Numbers		Pkg qty	Weight (1 pce) g
1	**End stops**	10 mm	0.394 in		Beige	BAM2	1SNA296351R0000		50	12.00
		8.2 mm	0.323 in			BAH22	1SNA164655R0400		50	10.00
2	**End sections**	1.5 mm	0.059 in		Beige	FJH501	1SNA199411R1400		25	6.50
3	**Circuit separators**	1.2 mm	0.047 in		Beige	SCH8	1SNA199412R1500		25	4.80
4	**Protecting covers**	Length 500 mm 19.70 in			Transparent	CPM	1SNA187312R1400		1	25.00
					Beige	CPM	1SNA197312R1600		10	25.00
5	**Terminal block markers**	Blank strip label for CPM			White	RTC	1SNA163156R2700		1	10.00
		Label holder				PEFH	1SNA163497R1600		10	
		Blank label for PEFH				RPED	1SNA163518R2200		1	12.00
		Blank card			White	RC610	1SNA233000R0100		10	7.50

1SNC167065S0201

HD6/14.SF Quick connect terminal blocks

For 5x20 fuse - 14 mm 0.551 in spacing

6 mm²

Description

- Terminal block for 5x20 fuse,
- Connection by 2 tabs for quick-connect 6.3 x 0.8 mm 0.248 x 0.031 in on each side.

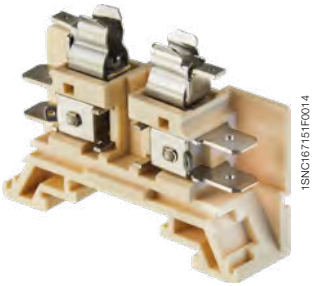

1SNC167151F0014

HD6/14.SF

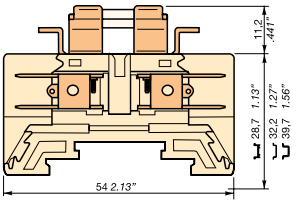

14 mm 0.551 in spacing

Ordering details

Description	Color	Type	Part Numbers		Pkg qty	Weight (1 pce) g
2 tabs on each side	Beige	HD6/14.SF.2G.2G	1SNA162315R2500		10	17.00

Main technical data

Connecting capacity		NF C	DIN	NF F 61-017
1 conductor per clamp	Quick-connect: 6.3 x 0.8 mm	0.34 ... 6 mm²		
Rated voltage	V AC	(Cat. C) 500 V	(Cat. C) 500 V	
	V DC	(Cat. C) 500 V	(Cat. C) 600 V	
Rated current		25 A	26 A	
Rated cross section		6 mm²	6 mm²	

Mounting instructions

Rail		Type 2, TH 35-7.5, TH 35-15

CE RoHS EAC

Accessories

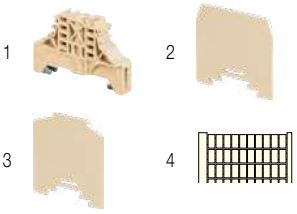

	Description			Color	Type	Part Numbers		Pkg qty	Weight (1 pce) g
1	End stops	10 mm	0.394 in	Beige	BAM2	1SNA296351R0000		50	12.00
		10.7 mm	0.421 in		BAH24	1SNA168355R1300		50	12.00
2	End sections	1.6 mm	0.063 in	Beige	FEH9	1SNA198549R0500		10	4.30
3	Circuit separators	1.2 mm	0.047 in	Beige	SCH8	1SNA199412R1500		25	4.80
4	Terminal block markers	Blank card		White	RC610	1SNA233000R0100		10	7.50

5

1SNC167073S0201

HD6/24.DH Quick connect terminal blocks

Component holder - 24 mm 0.945 in spacing

6 mm²

Description

- Terminal block for screw and solder diodes type SKN5 or SKNa4,
- Connection by 6 or 8 tabs for quick disconnects 6.3 x 0.8 mm 0.248 x 0.031 in,
- NF F 61-017 designation: BG25.2-2G2G (HD6/24.DH + SCH8).

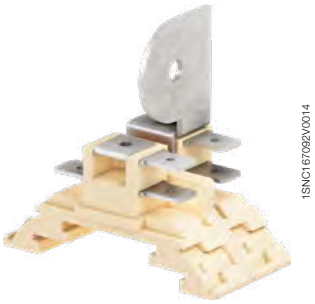

1SNC167092V0014

HD6/24.DH

Ordering details

Description	Color	Type	Part Numbers		Pkg qty	Weight (1 pce) g
6 tabs	Beige	HD6/24.DH	1SNA399964R0600		10	20.00
8 tabs	Beige	HD6/24.DH	1SNA399963R0500		10	20.00

Main technical data

Connecting capacity		NF C	DIN	NF F 61-017
1 conductor per clamp	Quick-connect: 6.3 x 0.8 mm	0.34 … 6 mm²		
Rated voltage	V AC	(Cat. C) 400 V	(Cat. C) 250 V	250 V
	V DC	(Cat. C) 250 V	(Cat. C) 250 V	250 V
Rated current		25 A	26 A	16 A
Rated cross section		6 mm²	6 mm²	

Mounting instructions

Rail	Type 2, TH 35-7.5, TH 35-15

CE RoHS EAC

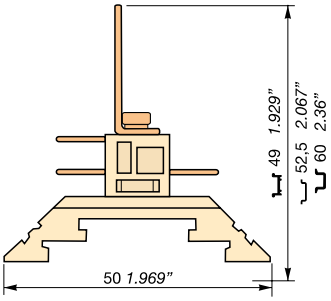

24 mm 0.945 in spacing

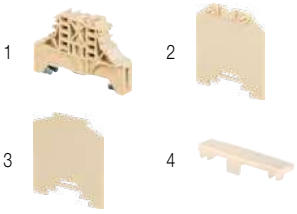

Accessories

	Description				Color	Type	Part Numbers		Pkg qty	Weight (1 pce) g
1	End stops	10 mm	0.394 in		Beige	BAM2	1SNA296351R0000		50	12.00
		10.7 mm	0.421 in			BAH24	1SNA168355R1300		50	12.00
2	End sections	1.5 mm	0.059 in		Beige	FJH501	1SNA199411R1400		25	6.50
3	Circuit separators	1.2 mm	0.047 in		Beige	SCH8	1SNA199412R1500		25	4.80
4	Terminal block markers	Label holder				PEFH	1SNA163497R1600		10	
		Blank label for PEFH				RPED	1SNA163518R2200		1	12.00
		Blank card			White	RC610	1SNA233000R0100		10	7.50

1SNC167007S0201

HD6/14.DH Quick connect terminal blocks

Component holder - 14 mm 0.551 in spacing

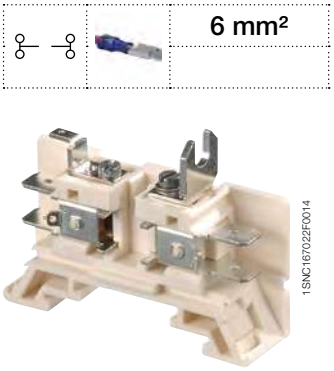

6 mm²

1SNC167022F0014

HD6/14.DH

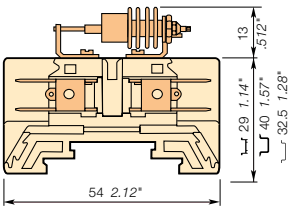

14 mm 0.551 in spacing

Description

- Terminal block for screw and solder diodes type SKN2.5 or SKNa2,
- Connection by 2 tabs for quick disconnects 6.3 x 0.8 mm 0.248 x 0.031 in on each side,
- NF F 61-017 designation: BG0014-2G2G (1SNA162971R2700).

Ordering details

Description	Color	Type	Part Numbers		Pkg qty	Weight (1 pce) g
2 tabs on each side	Beige	HD6/14.DH	1SNA162971R2700		10	20.00

Main technical data

Connecting capacity		NF C	DIN	NF F 61-017
1 conductor per clamp	Quick-connect: 6.3 x 0.8 mm	0.34 … 6 mm²		
Rated voltage	V AC	(Cat. C) 500 V	(Cat. C) 500 V	380 V
	V DC	(Cat. C) 500 V	(Cat. C) 600 V	500 V
Rated current		25 A	26 A	12 A
Rated cross section		6 mm²	6 mm²	

Mounting instructions

Rail		Type 2, TH 35-7.5, TH 35-15

CE RoHS EAC

Accessories

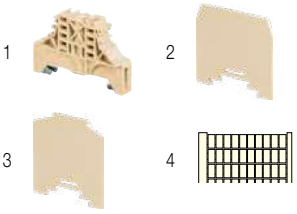

	Description			Color	Type	Part Numbers		Pkg qty	Weight (1 pce) g
1	End stops	10 mm	0.394 in	Beige	BAM2	1SNA296351R0000		50	12.00
		10.7 mm	0.421 in		BAH24	1SNA168355R1300		50	12.00
2	End sections	1.6 mm	0.063 in	Beige	FEH9	1SNA198549R0500		10	4.30
3	Circuit separators	1.2 mm	0.047 in	Beige	SCH8	1SNA199412R1500		25	4.80
4	Terminal block markers	Blank card		White	RC610	1SNA233000R0100		10	7.50

5

1SNC167018S0201

HD6/14.DG Quick connect terminal blocks

Component holder - 14 mm 0.551 in spacing

6 mm²

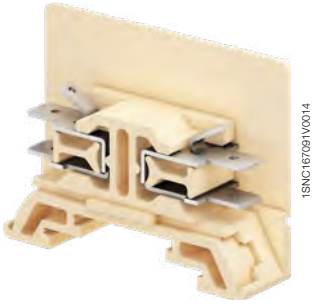

1SNC167091V0014

HD6/14.DG

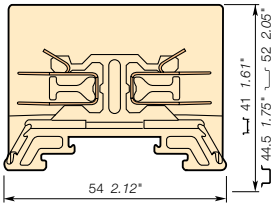

14 mm 0.551 in spacing

Description

- Terminal block for solder diodes or resistors,
- Connection by 2 tabs for quick-connect 6.3 x 0.8 mm 0.248 x 0.031 in on each side,
- NF F 61-017 designation: BG0014-2G2G (1SNA162309R1000).

Ordering details

Description	Color	Type	Part Numbers		Pkg qty	Weight (1 pce) g
2 tabs on each side	Beige	HD6/14.DG	1SNA162309R1000		10	20.00

Main technical data

Connecting capacity		NF C	DIN	NF F 61-017
1 conductor per clamp	Quick-connect: 6.3 x 0.8 mm	0.34 … 6 mm²		
Rated voltage	V AC	(Cat. C) 500 V	(Cat. C) 500 V	380 V
	V DC	(Cat. C) 500 V	(Cat. C) 600 V	500 V
Rated current		25 A	26 A	12 A
Rated cross section		6 mm²	6 mm²	

Mounting instructions

Rail		Type 2, TH 35-7.5, TH 35-15

CE RoHS EAC

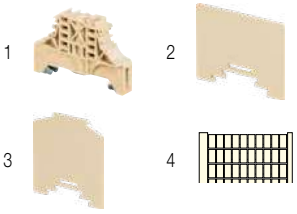

Accessories

	Description				Color	Type	Part Numbers		Pkg qty	Weight (1 pce) g
1	End stops	10 mm	0.394 in		Beige	BAM2	1SNA296351R0000		50	12.00
		10.7 mm	0.421 in			BAH24	1SNA168355R1300		50	12.00
2	End sections	1.5 mm	0.059 in		Beige	FEH8	1SNA198729R0100		25	4.30
3	Circuit separators	1.2 mm	0.047 in		Beige	SCH8	1SNA199412R1500		25	4.80
4	Terminal block markers	Blank card			White	RC610	1SNA233000R0100		10	7.50

1SNC1670205 0201

HD6/9.SDH.1 Quick connect terminal blocks

Component holder - 9.2 mm 0.362 in spacing

6 mm²

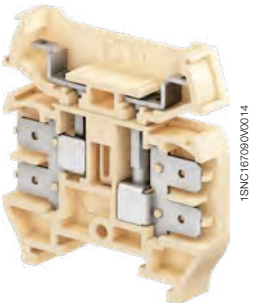

HD6/9.SDH.1

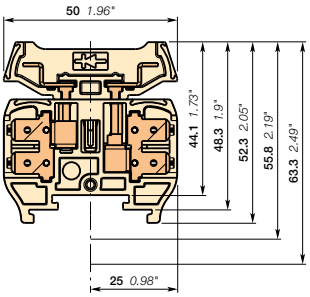

9.2 mm 0.362 in spacing

Description

- Connection interruptible by plugs for solder components DIA 7 mm 0.287 in max,
- Connection by 2 tabs for quick disconnects 6.3 x 0.8 mm 0.248 x 0.031 in on each side,
- NF F 61-017 designation: BH09.2-2G2G (1SNA162309R1000).

Ordering details

Description	Color	Type	Part Numbers		Pkg qty	Weight (1 pce) g
4 tabs	Beige	HD6/9.SDH.1	1SNA400800R0000		25	

Main technical data

Connecting capacity		NF C	DIN	NF F 61-017
1 conductor per clamp	Quick-connect: 6.3 x 0.8 mm	0.34 … 6 mm²		
Rated voltage	V AC			380 V
	V DC			500 V
Rated current				16 A
Rated cross section		6 mm²		

Mounting instructions

Rail		Type 2, TH 35-7.5, TH 35-15

CE RoHS EAC

Accessories

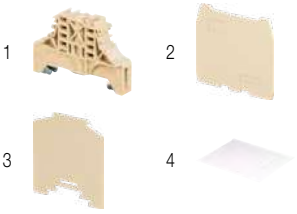

	Description				Color	Type	Part Numbers		Pkg qty	Weight (1 pce) g
1	End stops	10 mm	0.394 in		Beige	BAM2	1SNA296351R0000		50	12.00
		10.7 mm	0.421 in			BAH24	1SNA168355R1300		50	12.00
2	End sections	1.5 mm	0.059 in		Beige	FESDH	1SNA400799R0000		10	
3	Circuit separators	1.2 mm	0.047 in		Beige	SCH8	1SNA199412R1500		25	4.80
4	Terminal block markers	Blank card			White	RC810	1SNA234000R0200		10	8.20

1SNC167051S0201

HD6/14.SDH.1 Quick connect terminal blocks

Component holder - 14 mm 0.551 in spacing

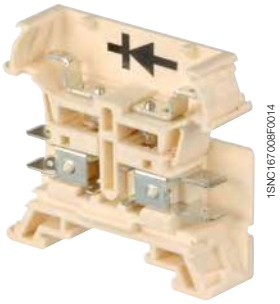

HD6/14.SDH.1

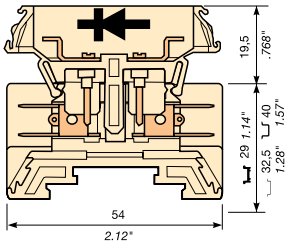

14 mm 0.551 in spacing

Description

- Connection interruptible by plugs for solder components,
- Connection by 2 tabs for quick disconnects 6.3 x 0.8 mm 0.248 x 0.031 in on each side,
- NF F 61-017 designation: BH0014-2G2G (1SNA162988R2100).

Ordering details

Description	Color	Type	Part Numbers		Pkg qty	Weight (1 pce) g
2 tabs on each side	Beige	HD6/14.SDH.1	1SNA162988R2100		10	30.00

Main technical data

Connecting capacity		NF C	DIN	NF F 61-017
1 conductor per clamp	Quick-connect: 6.3 x 0.8 mm	0.34 … 6 mm²		
Rated voltage	V AC	(Cat. C) 500 V	(Cat. C) 500 V	380 V
	V DC	(Cat. C) 500 V	(Cat. C) 600 V	500 V
Rated current		25 A	26 A	16 A
Rated cross section		6 mm²	6 mm²	

Mounting instructions

Rail		Type 2, TH 35-7.5, TH 35-15

CE RoHS EAC

Accessories

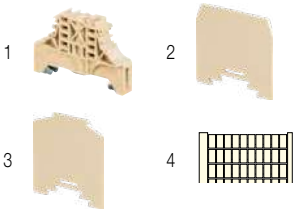

	Description			Color	Type	Part Numbers		Pkg qty	Weight (1 pce) g
1	End stops	10 mm	0.394 in	Beige	BAM2	1SNA296351R0000		50	12.00
		10.7 mm	0.421 in		BAH24	1SNA168355R1300		50	12.00
2	End sections	1.6 mm	0.063 in	Beige	FEH9	1SNA198549R0500		10	4.30
3	Circuit separators	1.2 mm	0.047 in	Beige	SCH8	1SNA199412R1500		25	4.80
4	Terminal block markers	Blank card		White	RC610	1SNA233000R0100		10	7.50

1SNC1670685S0201

HD6/14.SDH Quick connect terminal blocks

Component holder - 14 mm 0.551 in spacing

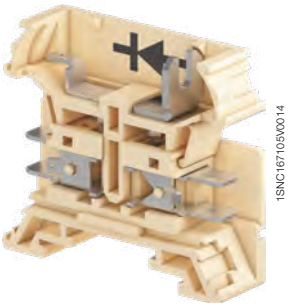

HD6/14.SDH

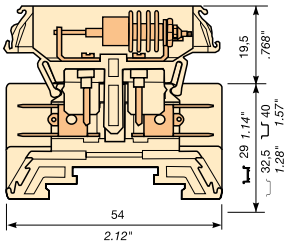

14 mm 0.551 in spacing

Description

- Terminal block for screw and solder diodes type SKN2.5 or SKNa2,
- Connection by 2 tabs for quick disconnects 6.3 x 0.8 mm 0.248 x 0.031 in on each side,
- NF F 61-017 designation: BH0014-2G2G (1SNA162972R2000).

Ordering details

Description	Color	Type	Part Numbers		Pkg qty	Weight (1 pce) g
2 tabs on each side	Beige	HD6/14.SDH	1SNA162972R2000		10	30.00

Main technical data

Connecting capacity		NF C	DIN	NF F 61-017
1 conductor per clamp	Quick-connect: 6.3 x 0.8 mm	0.34 … 6 mm²		
Rated voltage	V AC	(Cat. C) 500 V	(Cat. C) 500 V	380 V
	V DC	(Cat. C) 500 V	(Cat. C) 600 V	500 V
Rated current		25 A	26 A	16 A
Rated cross section		6 mm²	6 mm²	

Mounting instructions

Rail		Type 2, TH 35-7.5, TH 35-15

CE RoHS EAC

Accessories

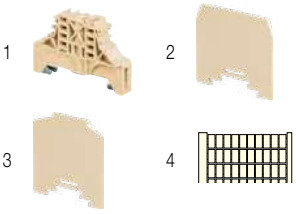

	Description			Color	Type	Part Numbers		Pkg qty	Weight (1 pce) g
1	End stops	10 mm	0.394 in	Beige	BAM2	1SNA296351R0000		50	12.00
		10.7 mm	0.421 in		BAH24	1SNA168355R1300		50	12.00
2	End sections	1.6 mm	0.063 in	Beige	FEH9	1SNA198549R0500		10	4.30
3	Circuit separators	1.2 mm	0.047 in	Beige	SCH8	1SNA199412R1500		25	4.80
4	Terminal block markers	Blank card		White	RC610	1SNA233000R0100		10	7.50

1SNC167069S0201

HD2.5/6.3.3G.3G.1 Quick connect terminal blocks

Feed-through - 6 mm 0.236 in spacing

2.5 mm²

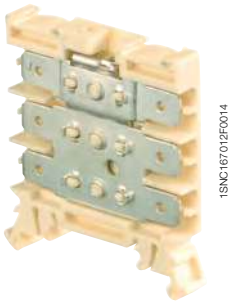

HD2.5/6.3.3G.3G.1

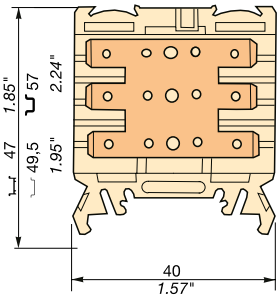

6 mm 0.236 in spacing

Description

- Connection by 6 longitudinal tabs for quick-connect 6.3 x 0.8 mm 0.248 x 0.031 in,
- Possibility of testing and transverse connection,
- Use of jumper bars requires to cut out the precut partition.

Ordering details

Description		Color	Type	Part Numbers		Pkg qty	Weight (1 pce) g
6 tabs	1 circuit	Beige	HD2.5/6.3.3G.3G.1	1SNA190316R2700		50	11.00

Main technical data

Connecting capacity		NF C	DIN	NF F 61-017
1 conductor per clamp	Quick-connect: 6.3 x 0.8 mm	0.34 … 2.5 mm²		
Rated voltage	V AC	(Cat. C) 250 V	(Cat. C) 250 V	
	V DC	(Cat. C) 250 V	(Cat. C) 300 V	
Rated current		25 A		
Rated cross section		2.5 mm²		

Mounting instructions

Rail		Type 2, TH 35-7.5, TH 35-15

CE RoHS EAC

Accessories

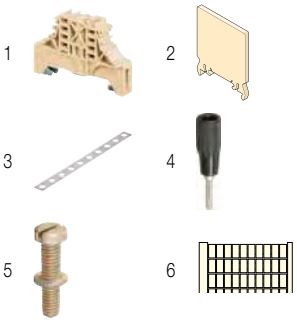

	Description				Color	Type	Part Numbers		Pkg qty	Weight (1 pce) g
1	**End stops**	10 mm	0.394 in		Beige	BAM2	1SNA296351R0000		50	12.00
		10.7 mm	0.421 in			BAH24	1SNA168355R1300		50	12.00
2	**End sections**	1 mm	0.039 in		Beige	FEHD2	1SNA168949R1700		20	2.00
3	**Jumper bars**	2 poles	32 A (IEC)			BJS61-2	1SNA168481R2300		10	1.80
		3 poles	32 A (IEC)			BJS61-3	1SNA168482R2400		10	1.80
		4 poles	32 A (IEC)			BJS61-4	1SNA168483R2500		10	1.80
		5 poles	32 A (IEC)			BJS61-5	1SNA168484R2600		10	1.80
		10 poles	32 A (IEC)			BJS61-10	1SNA168485R2700		10	2.00
4	**Test plugs**	DIA 2 mm 0.079 in			Black	FC2	1SNA007865R2600		100	2.00
5	**Fastening kits**	Screw M2.5X5 for jumper bar BJH				VSJ6	1SNA167735R2700		1	
		Washer for screw VSJ				RDJ6	1SNA173241R0600		1000	0.10
6	**Terminal block markers**	Blank card			White	RC610	1SNA233000R0100		10	7.50

1SNC167046S0201

HD2.5/6.3.2G.2G.1.GG Quick connect terminal blocks

Feed-through - 6 mm 0.236 in spacing

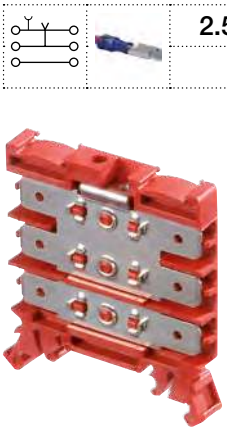

HD2.5/6.3.2G.2G.1.GG

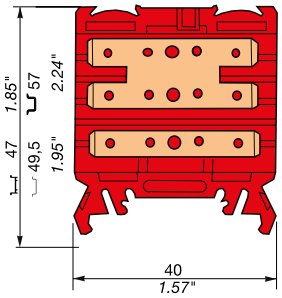

6 mm 0.236 in spacing

2.5 mm²

Description

- 2 circuits: 1 circuit with 4 longitudinal tabs for quick-connect 6.3 x 0.8 mm 0.248 x 0.031 in, possibility of testing and transverse connection and 1 circuit with 2 longitudinal tabs for quick-connect 6.3 x 0.8 mm 0.248 x 0.031 in,
- Use of jumper bars requires to cut out the precut partition.

Ordering details

Description		Color	Type	Part Numbers		Pkg qty	Weight (1 pce) g
6 tabs	2 crcuits	Red	HD2.5/6.3.2G.2G.1.GG	1SNA190312R2300		50	10.00

Main technical data

Connecting capacity		NF C	DIN	NF F 61-017
1 conductor per clamp	Quick-connect: 6.3 x 0.8 mm	0.34 … 2.5 mm²		
Rated voltage	V AC	(Cat. C) 250 V	(Cat. C) 250 V	
	V DC	(Cat. C) 250 V	(Cat. C) 300 V	
Rated current		25 A		
Rated cross section		2.5 mm²		

Mounting instructions

Rail		Type 2, TH 35-7.5, TH 35-15

CE RoHS EAC

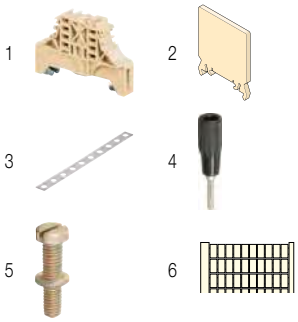

Accessories

	Description				Color	Type	Part Numbers		Pkg qty	Weight (1 pce) g
1	**End stops**	10 mm	0.394 in		Beige	BAM2	1SNA296351R0000		50	12.00
		10.7 mm	0.421 in			BAH24	1SNA168355R1300		50	12.00
2	**End sections**	1 mm	0.039 in		Beige	FEHD2	1SNA168949R1700		20	2.00
3	**Jumper bars**	2 poles	32 A (IEC)			BJS61-2	1SNA168481R2300		10	1.80
		3 poles	32 A (IEC)			BJS61-3	1SNA168482R2400		10	1.80
		4 poles	32 A (IEC)			BJS61-4	1SNA168483R2500		10	1.80
		5 poles	32 A (IEC)			BJS61-5	1SNA168484R2600		10	1.80
		10 poles	32 A (IEC)			BJS61-10	1SNA168485R2700		10	2.00
4	**Test plugs**	DIA 2 mm 0.079 in			Black	FC2	1SNA007865R2600		100	2.00
5	**Fastening kits**	Screw M2.5X5 for jumper bar BJH				VSJ6	1SNA167735R2700		1	
		Washer for screw VSJ				RDJ6	1SNA173241R0600		1000	0.10
6	**Terminal block markers**	Blank card			White	RC610	1SNA233000R0100		10	7.50

1SNC167048S0201

HD2.5/6.3.GG1.2G.2G Quick connect terminal blocks

Feed-through - 6 mm 0.236 in spacing

2.5 mm²

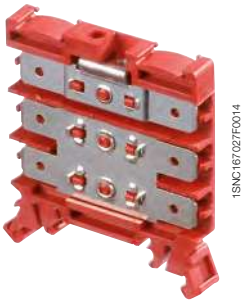

HD2.5/6.3.GG1.2G.2G

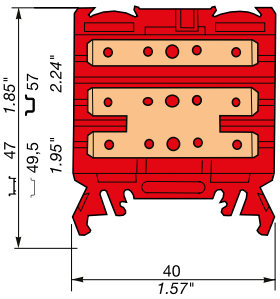

6 mm 0.236 in spacing

Description

- 2 circuits: 1 circuit with 2 longitudinal tabs for quick-connect 6.3 x 0.8 mm 0.248 x 0.031 in, possibility of testing and transverse connection and 1 circuit with 4 longitudinal tabs for quick-connect 6.3 x 0.8 mm 0.248 x 0.031 in,
- Use of jumper bars requires to cut out the precut partition.

Ordering details

Description		Color	Type	Part Numbers		Pkg qty	Weight (1 pce) g
6 tabs	2 circuits	Red	HD2.5/6.3.GG1.2G.2G	1SNA190314R2500		50	11.00

Main technical data

Connecting capacity		NF C	DIN	NF F 61-017
1 conductor per clamp	Quick-connect: 6.3 x 0.8 mm	0.34 … 2.5 mm²		
Rated voltage	V AC	(Cat. C) 250 V	(Cat. C) 250 V	
	V DC	(Cat. C) 250 V	(Cat. C) 300 V	
Rated current		25 A		
Rated cross section		2.5 mm²	2.5 mm²	

Mounting instructions

Rail		Type 2, TH 35-7.5, TH 35-15

CE RoHS EAC

Accessories

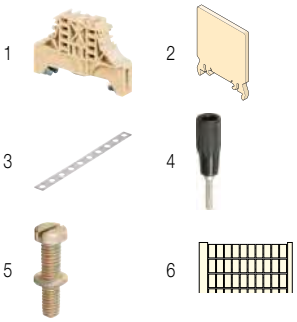

	Description				Color	Type	Part Numbers		Pkg qty	Weight (1 pce) g
1	**End stops**	10 mm	0.394 in		Beige	BAM2	1SNA296351R0000		50	12.00
		10.7 mm	0.421 in			BAH24	1SNA168355R1300		50	12.00
2	**End sections**	1 mm	0.039 in		Beige	FEHD2	1SNA168949R1700		20	2.00
3	**Jumper bars**	2 poles	32 A (IEC)			BJS61-2	1SNA168481R2300		10	1.80
		3 poles	32 A (IEC)			BJS61-3	1SNA168482R2400		10	1.80
		4 poles	32 A (IEC)			BJS61-4	1SNA168483R2500		10	1.80
		5 poles	32 A (IEC)			BJS61-5	1SNA168484R2600		10	1.80
		10 poles	32 A (IEC)			BJS61-10	1SNA168485R2700		10	2.00
4	**Test plugs**	DIA 2 mm 0.079 in			Black	FC2	1SNA007865R2600		100	2.00
5	**Fastening kits**	Screw M2.5X5 for jumper bar BJH				VSJ6	1SNA167735R2700		1	
		Washer for screw VSJ				RDJ6	1SNA173241R0600		1000	0.10
6	**Terminal block markers**	Blank card			White	RC610	1SNA233000R0100		10	7.50

1SNC167067S0201

HD2.5/6.3.GG.1.2GG Quick connect terminal blocks

Feed-through - 6 mm 0.236 in spacing

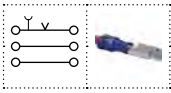

2.5 mm²

HD2.5/6.3.GG.1.2GG

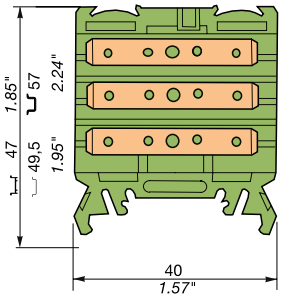

6 mm 0.236 in spacing

Description

- 3 circuits: 1 circuit with 2 longitudinal tabs for quick-connect 6.3 x 0.8 mm 0.248 x 0.031 in, possibility of testing and transverse connection and 2 circuit with 2 longitudinal tabs for quick-connect 6.3 x 0.8 mm 0.248 x 0.031 in,
- Use of jumper bars requires to cut out the precut partition.

Ordering details

Description		Color	Type	Part Numbers		Pkg qty	Weight (1 pce) g
6 tabs	3 circuits	Green	HD2.5/6.3.GG.1.2GG	1SNA199025R1400		50	11.00

Main technical data

Connecting capacity		NF C	DIN	NF F 61-017
1 conductor per clamp	Quick-connect: 6.3 x 0.8 mm	0.34 … 2.5 mm²		
Rated voltage	V AC	(Cat. C) 250 V	(Cat. C) 250 V	
	V DC	(Cat. C) 250 V	(Cat. C) 300 V	
Rated current		25 A		
Rated cross section		2.5 mm²		

Mounting instructions

Rail		Type 2, TH 35-7.5, TH 35-15

CE RoHS EAC

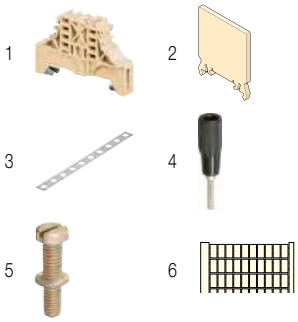

Accessories

	Description			Color	Type	Part Numbers		Pkg qty	Weight (1 pce) g
1	**End stops**	10 mm	0.394 in	Beige	BAM2	1SNA296351R0000		50	12.00
		10.7 mm	0.421 in		BAH24	1SNA168355R1300		50	12.00
2	**End sections**	1 mm	0.039 in	Beige	FEHD2	1SNA168949R1700		20	2.00
3	**Jumper bars**	2 poles	32 A (IEC)		BJS61-2	1SNA168481R2300		10	1.80
		3 poles	32 A (IEC)		BJS61-3	1SNA168482R2400		10	1.80
		4 poles	32 A (IEC)		BJS61-4	1SNA168483R2500		10	1.80
		5 poles	32 A (IEC)		BJS61-5	1SNA168484R2600		10	1.80
		10 poles	32 A (IEC)		BJS61-10	1SNA168485R2700		10	2.00
4	**Test plugs**	DIA 2 mm 0.079 in		Black	FC2	1SNA007865R2600		100	2.00
5	**Fastening kits**	Screw M2.5X5 for jumper bar BJH			VSJ6	1SNA167735R2700		1	
		Washer for screw VSJ			RDJ6	1SNA173241R0600		1000	0.10
6	**Terminal block markers**	Blank card		White	RC610	1SNA233000R0100		10	7.50

1SNC167060S0201

HD2.5/6.3.2G.2G.1 Quick connect terminal blocks

Feed-through - 6 mm 0.236 in spacing

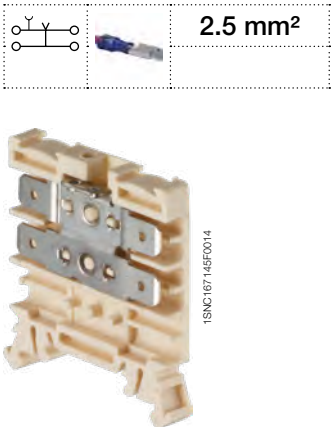

HD2.5/6.3.2G.2G.1

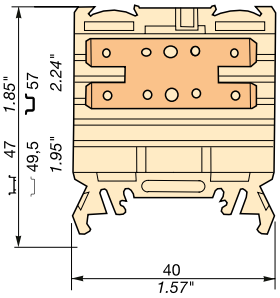

6 mm 0.236 in spacing

2.5 mm²

Description

- Connection by 4 longitudinal tabs for quick-connect 6.3 x 0.8 mm 0.248 x 0.031 in,
- Possibility of testing and transverse connection,
- Use of jumper bars requires to cut out the precut partition.

Ordering details

Description		Color	Type	Part Numbers		Pkg qty	Weight (1 pce) g
4 tabs	1 circuit	Beige	HD2.5/6.3.2G.2G.1	1SNA190305R0500		50	10.00

Main technical data

Connecting capacity		NF C	DIN	NF F 61-017
1 conductor per clamp	Quick-connect: 6.3 x 0.8 mm	0.34 … 2.5 mm²		
Rated voltage	V AC	(Cat. C) 250 V	(Cat. C) 250 V	
	V DC	(Cat. C) 250 V	(Cat. C) 300 V	
Rated current		25 A		
Rated cross section		2.5 mm²		

Mounting instructions

Rail		Type 2, TH 35-7.5, TH 35-15

CE RoHS EAC

Accessories

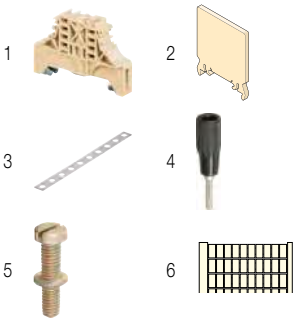

	Description			Color	Type	Part Numbers		Pkg qty	Weight (1 pce) g
1	**End stops**	10 mm	0.394 in	Beige	BAM2	1SNA296351R0000		50	12.00
		10.7 mm	0.421 in		BAH24	1SNA168355R1300		50	12.00
2	**End sections**	1 mm	0.039 in	Beige	FEHD2	1SNA168949R1700		20	2.00
3	**Jumper bars**	2 poles	32 A (IEC)		BJS61-2	1SNA168481R2300		10	1.80
		3 poles	32 A (IEC)		BJS61-3	1SNA168482R2400		10	1.80
		4 poles	32 A (IEC)		BJS61-4	1SNA168483R2500		10	1.80
		5 poles	32 A (IEC)		BJS61-5	1SNA168484R2600		10	1.80
		10 poles	32 A (IEC)		BJS61-10	1SNA168485R2700		10	2.00
4	**Test plugs**	DIA 2 mm 0.079 in		Black	FC2	1SNA007865R2600		100	2.00
5	**Fastening kits**	Screw M2.5X5 for jumper bar BJH			VSJ6	1SNA167735R2700		1	
		Washer for screw VSJ			RDJ6	1SNA173241R0600		1000	0.10
6	**Terminal block markers**	Blank card		White	RC610	1SNA233000R0100		10	7.50

1SNC167049S0201

HD2.5/6.3.GH.2G.H Quick connect terminal blocks

Feed-through - 6 mm 0.236 in spacing

2.5 mm²

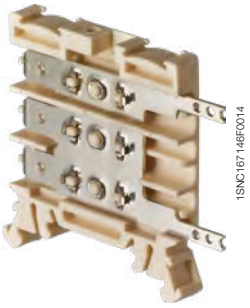

HD2.5/6.3.GH.2G.H

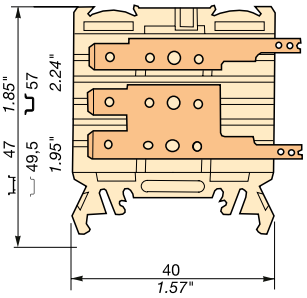

6 mm 0.236 in spacing

Description

– 2 circuits: 1 circuit with 1 longitudinal tabs for quick-connect 6.3 x 0.8 mm 0.248 x 0.031 in and 1 pin for soldered connection, and 1 circuit with 2 longitudinal tabs for quick-connect 6.3 x 0.8 mm 0.248 x 0.031 in and 1 pin for soldered connection.

Ordering details

Description		Color	Type	Part Numbers		Pkg qty	Weight (1 pce) g
3 tabs and 2 pins	2 circuits	Beige	HD2.5/6.3.GH.2G.H	1SNA199096R1400		50	11.00

Main technical data

Connecting capacity		NF C	DIN	NF F 61-017
1 conductor per clamp	Quick-connect: 6.3 x 0.8 mm	0.34 … 2.5 mm²		
Rated voltage	V AC	(Cat. C) 250 V	(Cat. C) 250 V	
	V DC	(Cat. C) 250 V	(Cat. C) 300 V	
Rated current		25 A		
Rated cross section		2.5 mm²		

Mounting instructions

Rail		Type 2, TH 35-7.5, TH 35-15

CE RoHS EAC

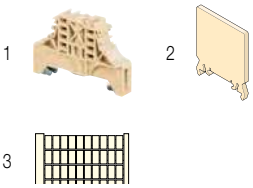

Accessories

	Description				Color	Type	Part Numbers		Pkg qty	Weight (1 pce) g
1	**End stops**	10 mm	0.394 in		Beige	BAM2	1SNA296351R0000		50	12.00
		10.7 mm	0.421 in			BAH24	1SNA168355R1300		50	12.00
2	**End sections**	1 mm	0.039 in		Beige	FEHD2	1SNA168949R1700		20	2.00
3	**Terminal block markers**	Blank card			White	RC610	1SNC233000R0100		10	7.50

5

1SNC167045S0201

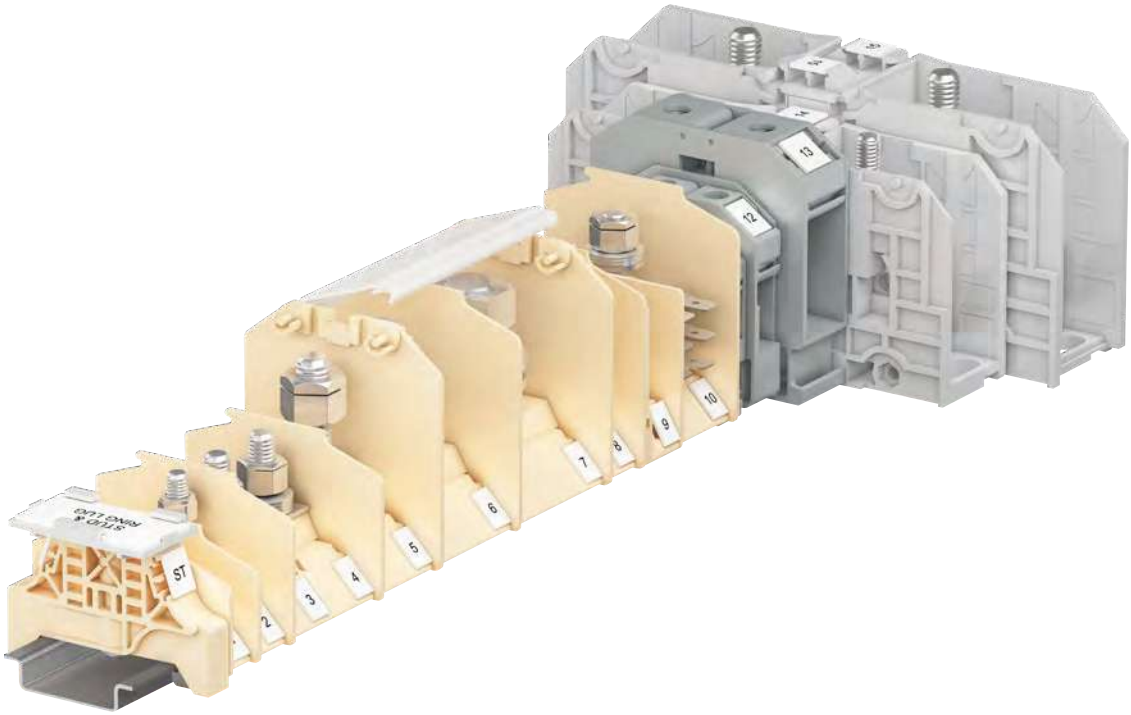

Technologies presentation		170
Overview		172

1 stud

4 mm²	**HD4/9.F4**	M4 stud with self locking nut + spring washers	176
	HD4/9.F4.2	M4 stud with nut	177
	HD4/10.F4.19	M4 stud with self locking nut + TREP washers	178
10 mm²	**HD10/12.F5.3**	M5 stud with self locking nut + spring washers	179
	HD10/12.F5	M5 stud with self locking nut + TREP washers	180
	HD10/12.F5.1	M5 stud with 2 nuts + spring washers	181
	HD10/12.F5.2	M5 stud with 2 brass nuts + spring washers	181
35 mm²	**HD35/16.F6.19**	M6 stud with self locking nut + TREP washers	182
	HD35/16.F6.19.1	M6 stud with 2 nuts + spring washers	183
70 mm²	**HD70/22.F8.31**	M8 stud with self locking nut + TREP washers	184
	HD70/22.F8.31.1	M8 stud with 2 nuts + spring washers	185
	HD70/22.F8.31.2	M8 stud with 2 brass nuts + spring washers	185
120 mm²	**HD120/30.F10.31**	M10 stud with self locking nut + TREP washers	186
	HD120/30.F10.31.1	M10 stud with 2 nuts + spring washers	187
185 mm²	**HD185/36.F12.31.1**	M12 stud with 2 nuts + spring washers	188

2 studs for TH35 & type 2 rails mounting

4 mm²	**HD4/9.FF4**	M4 studs with self locking nut + spring washers	189
6 mm²	**HD6/13.FF4**	M4 studs with self locking nut + spring washers	190
10 mm²	**HD10/12.FF5**	M5 studs with self locking nut + TREP washers	191
16 mm²	**HD16/14.FF5.21.3**	M5 studs with self locking nut + spring washers	192
	HD16/14.FF5.20.3	M5 studs with self locking nut + spring washers	193
	HD16/14.FF5.21	M5 studs with self locking nut + TREP washers	194
	HD16/14.FF5.20	M5 studs with self locking nut + TREP washers	195

2 studs for TH35 & base mounting

35 mm² / 1 AWG	**D35/27.FF**	M6 studs with 2 nuts + spring washers	196
70 mm² / 000 AWG	**D70/32.FF**	M8 studs with 2 nuts + spring washers	197
120 mm² / 300 Kcmil	**D120/42.FF**	M10 studs with 2 nuts + spring washers	198
185 mm² / 500 Kcmil	**D185/55.FF**	M12 studs with 2 nuts + spring washers	199
300 mm² / 1000 Kcmil	**D300/55.FF**	M16 studs with 2 nuts + spring washers	200

2 studs with captive nuts

2.5 mm² / 14 AWG	**RGW2.5-V0**	M3 studs feed-through with captive nuts	201
6 mm² / 10 AWG	**RGW6-V0**	M4 studs feed-through with captive nuts	202
25 mm² / 4 AWG	**RGW25-M5-V0**	M5 studs feed-through with captive nuts	203
25 mm² / 4 AWG	**RGW25-M6-V0**	M6 studs feed-through with captive nuts	204

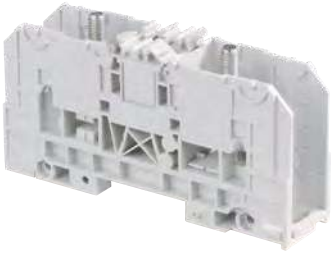

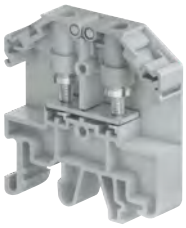

The “Pull-out proof” connection for rolling stock

The stud technology allows all power distribution configurations and improves wiring secureness thanks to “Pull-out proof" connection (stud+lug).
The HD terminal blocks provides a large scope of 1 and 2 studs configurations with different types of washers and nuts (Onduflex®, Trep®, Grover®).
The D type power blocks provide an alternative with specific locking foot and rotative covers.
The RGW terminal blocks offer a combination of fast and secured wiring, with captive nuts in a pivoting wing.

Reliable in harsh conditions

Continuous operation guaranteed for rolling stock

- Environmental tests: aging, corrosion, flammability, toxicity (I2F2, V0, HL3 R22)
- Mechanical tests: vibration and shock.

Safety and protection

Secured wiring

- Captive wire connection: stud + ring lug
- Anti-vibration and anti-loosening equipments: self locking nuts, spring washers.

More control in smaller space

High density wiring with compact design

- 2 studs version: up to 4 conductors per block
- Compact 1 stud version for 2 conductors.

1SNC167095S0201

Features

HD / D type

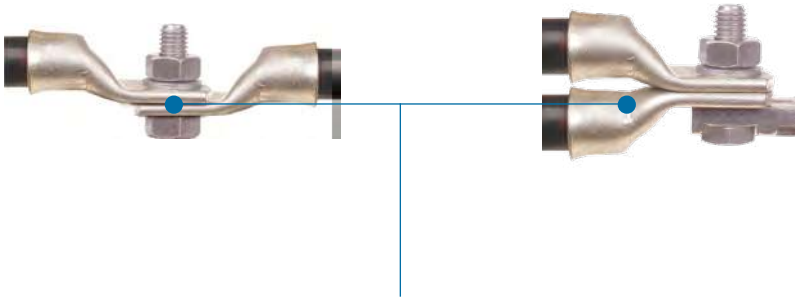

RGW type

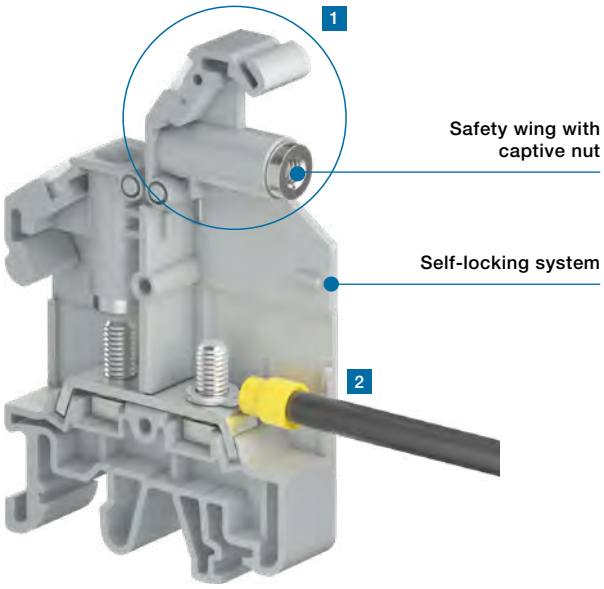

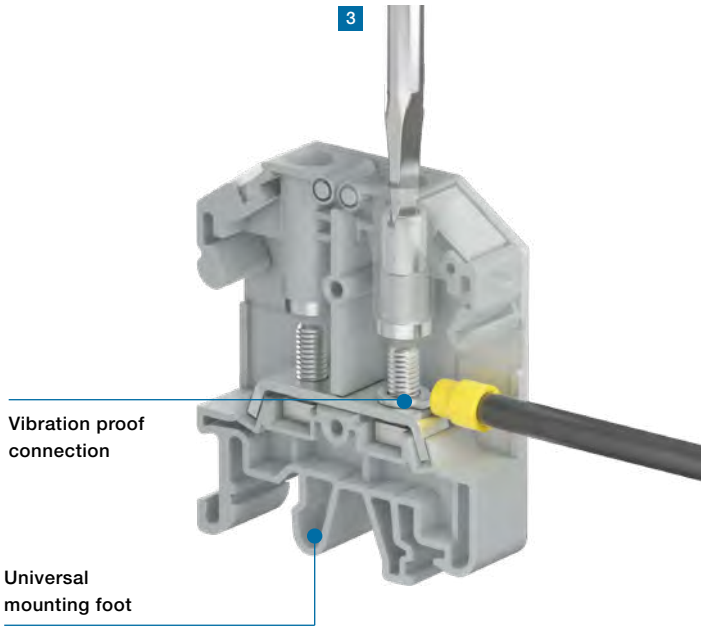

Easy 3 step wiring :

1 Open the safety wing - 2 Hook the wire on the stud and close the wing - 3 Screw down the nut

1SNC167095S0201

Range overview up to 300 mm² / 1 000 Kcmil

HD type
From 4 mm² (M4)
to 185 mm² (M12)

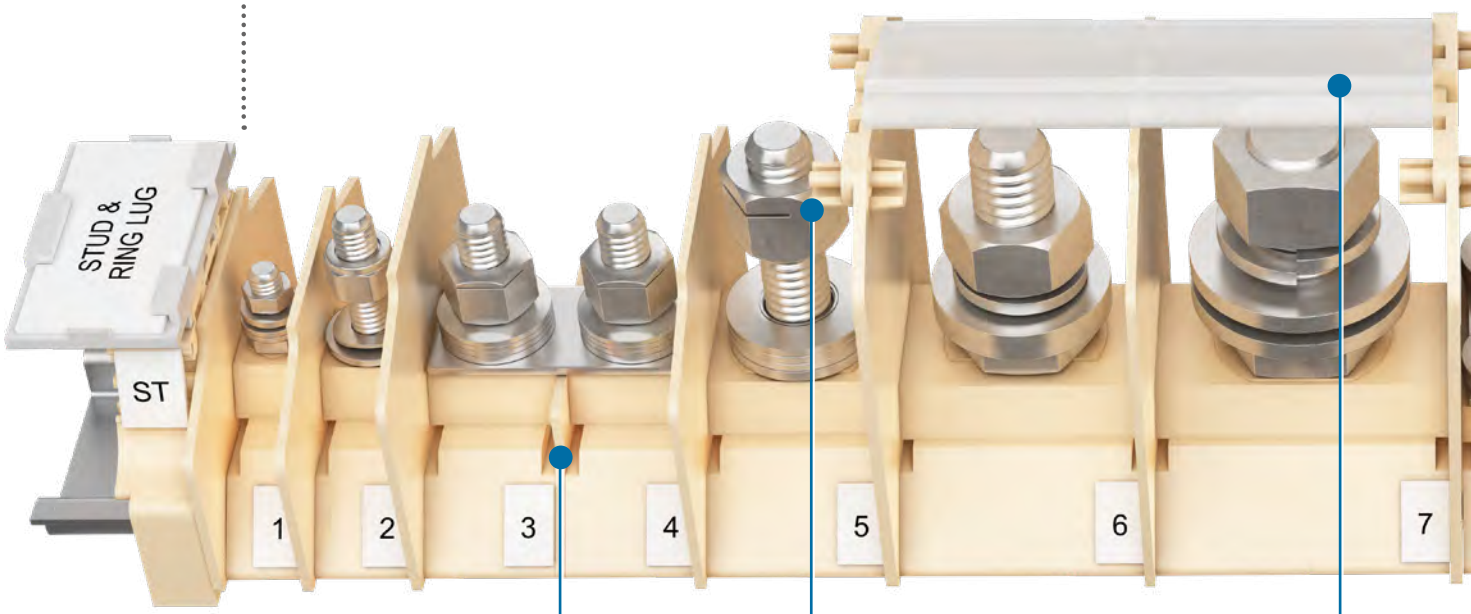

Rotative cover
Protects the metallic parts

Spacers
Provide sufficient space between neighboring terminal blocks

Anti-loosening equipments
Self-locking nut, plastic elastic washer or conical spring washers maintaining a constant pressure on the contact

D type
From 4 mm² (M4)
to 16 mm² (M5)

RGW type
From 2.5 mm² (M3)
to 25 mm² (M6)

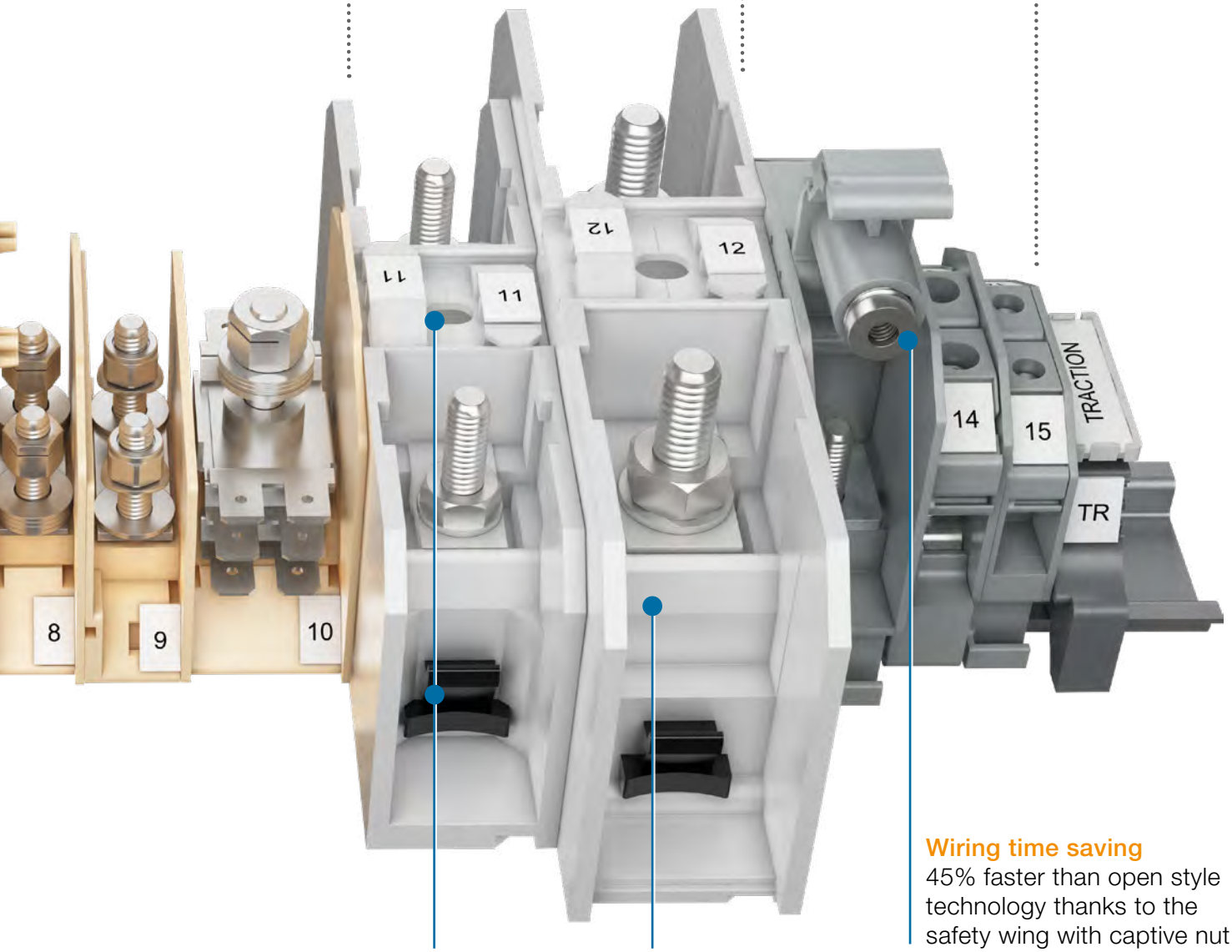

Wiring time saving
45% faster than open style technology thanks to the safety wing with captive nut

Easy locking / unlocking on the rail
Locking: single push on side foot
Unlocking: quarter-turn on the center

Adaptable protective cover
Removable and rotating
for easier wiring

1SNC167096S0201

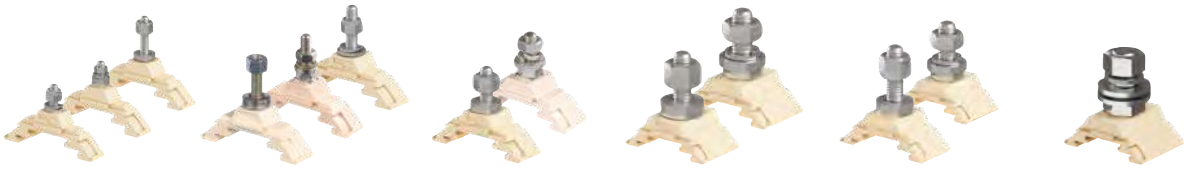

HD type - 1 Stud for TH35 & type 2 rails mounting

Section							
4 mm²	M4	HD4/9.F4 HD4/9.F4.2 HD4/10.F4.19					
10 mm²	M5		HD10/12.F5 HD10/12.F5.1…5.2 HD10/12.F5.3				
35 mm²	M6			HD35/16.F6.19 HD35/16.F6.19.1			
70 mm²	M8				HD70/22.F8.31 HD70/22.F8.31.1 HD70/22.F8.31.2		
120 mm²						HD120/30.F10.31 HD120/30.F10.31.1	
185 mm²							HD185/36.F12.31.1

HD type - 2 Studs for TH35 & type 2 rails mounting

Section								
4 mm²	M4	HD4/9.FF4						
6 mm²	M4		HD6/13.FF4					
10 mm²	M5			HD10/12.FF5				
16 mm²	M5				HD16/14.FF5.21	HD16/14.FF5.21.3	HD16/14.FF5.20.3	HD16/14.FF5.20

Clamp - Channels for jumpering or testing - Test socket - Blown-fuse indicator

D type - 2 Studs for TH35

Section						
35 mm²	M6	D35/27.FF				
70 mm²	M8		D70/32.FF			
120 mm²	M10			D120/42.FF		
185 mm²	M12				D185/55.FF	
300 mm²	M16					D300/55.FF

RGW type - 2 Studs with captive nuts for TH35

Section				
2.5 mm²	M3	RGW2.5-V0		
6 mm²	M4		RGW6-V0	
25 mm²	M5			RGW25-M5-V0
	M6			RGW25-M6-V0

1SNC167097S0201

HD4/9.F4 stud terminal blocks

Feed-through - 9.5 mm 0.374 in spacing

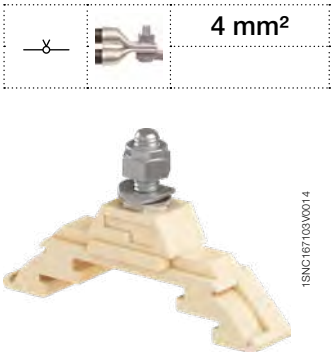

4 mm²

1SNC167103V0014

HD4/9.F4

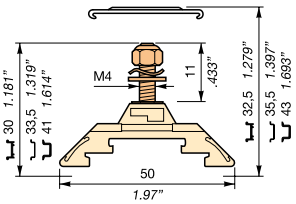

9.5 mm 0.374 in spacing

Description

- 1 stud terminal M4 x 11.5 mm 0.453 in,
- Equipment: self locking nut + spring washer + washer.

Ordering details

Description	Color	Type	Part Numbers		Pkg qty	Weight (1 pce) g
1 stud M4	Beige	HD4/9.F4	1SNA295391R2000		100	6.00

Main technical data

Connecting capacity		NF C	DIN	NF F 61-017
Wire size	Lug (NF C 20-130)	0.5 ... 4 mm²		
	Lug (DIN 46235 / 46234)		0.5 ... 4 mm²	
	Quick-connect: 6.3 x 0.8 mm			
Rated voltage	V AC	(Cat. C) 500 V		
	V DC	(Cat. C) 500 V		
Rated current		32 A		
Rated cross section		4 mm²		

Mounting instructions

Rail	Type 2, TH 35-7.5, TH 35-15
Tool	Wrench Ø 7 mm Ø 0.276 in
Torque	1.2 N.m 10.6 lb.in

CE RoHS EAC

The use of a jumper bar requires to use a spacer instead of a circuit separator.

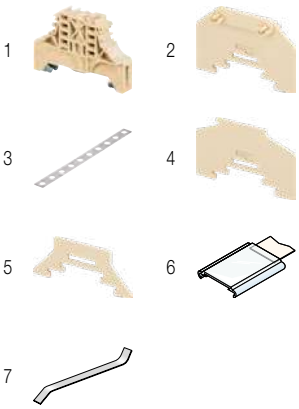

Accessories

	Description				Color	Type	Part Numbers		Pkg qty	Weight (1 pce) g
1	End stops	10 mm	0.394 in		Beige	BAM2	1SNA296351R0000		50	12.00
		7.1 mm	0.28 in			BAH21	1SNA167489R2200		50	8.00
2	End sections	1.5 mm	0.059 in		Beige	FJHD32	1SNA295431R1000		25	4.00
3	Jumper bars	10 poles				BJH105	1SNA163503R2400		10	197.00
4	Circuit separators	1.2 mm	0.047 in		Beige	SCHD1	1SNA295428R2500		25	2.00
5	Spacers	1.2 mm	0.047 in		Beige	INHD1	1SNA295427R1400		25	2.00
6	Protecting covers	Length 500 mm 19.70 in			Transparent	CPM	1SNA187312R1400		1	25.00
					Beige	CPM	1SNA197312R1600		10	25.00
7	Terminal block markers	Blank strip label for CPM			White	RTC	1SNA163156R2700		1	10.00
		Label holder				PEFH	1SNA163497R1600		10	
		Blank label for PEFH				RPED	1SNA163518R2200		1	12.00
		Blank card			White	RC610	1SNA233000R0100		10	7.50

1SNC167064S0201

HD4/9.F4.2 stud terminal blocks

Feed-through - 9.5 mm 0.374 in spacing

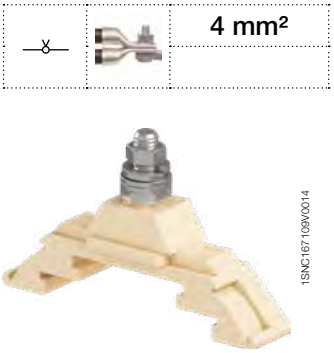

4 mm²

1SNC167109V0014

HD4/9.F4.2

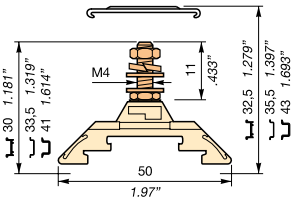

9.5 mm 0.374 in spacing

Description

- 1 stud terminal M4 x 11.5 mm 0.453 in,
- Equipment: 1 bottom nut + 2 washers + 1 spring washer + 1 top nut.

Ordering details

Description		Color	Type	Part Numbers		Pkg qty	Weight (1 pce) g
1 stud M4	Brass equipment	Yellow	HD4/9.F4.2	1SNA205392R0700		100	6.00
		Beige	HD4/9.F4.2	1SNA295392R2100		100	6.00

Main technical data

Connecting capacity		NF C	DIN	NF F 61-017
Wire size	Lug (NF C 20-130)	0.5 ... 4 mm²		
	Lug (DIN 46235 / 46234)		0.5 ... 4 mm²	
	Quick-connect: 6.3 x 0.8 mm			
Rated voltage	V AC	(Cat. C) 500 V		
	V DC	(Cat. C) 500 V		
Rated current		32 A		
Rated cross section		4 mm²		

Mounting instructions

Rail		Type 2, TH 35-7.5, TH 35-15
Tool		Wrench Ø 7 mm Ø 0.276 in
Torque		1.2 N.m 10.6 lb.in

CE RoHS EAC

The use of a jumper bar requires to use a spacer instead of a circuit separator.

Accessories

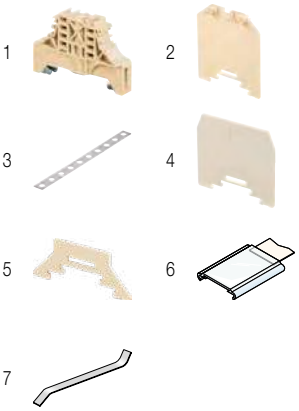

	Description				Color	Type	Part Numbers		Pkg qty	Weight (1 pce) g
1	**End stops**	10 mm	0.394 in		Beige	BAM2	1SNA296351R0000		50	12.00
		7.1 mm	0.28 in			BAH21	1SNA167489R2200		50	8.00
2	**End sections**	1.5 mm	0.059 in		Yellow	FJHD32	1SNA205431R2600		25	
					Beige	FJHD32	1SNA295431R1000		25	4.00
3	**Jumper bars**	10 poles				BJH105	1SNA163503R2400		10	197.00
4	**Circuit separators**	1.2 mm	0.047 in		Yellow	SCHD1	1SNA205428R0300		25	
					Beige	SCHD1	1SNA295428R2500		25	2.00
5	**Spacers**	1.2 mm	0.047 in		Yellow	INHD1	1SNA205427R2200		25	
					Beige	INHD1	1SNA295427R1400		25	2.00
6	**Protecting covers**	Length 500 mm 19.70 in			Transparent	CPM	1SNA187312R1400		1	25.00
					Beige	CPM	1SNA197312R1600		10	25.00
7	**Terminal block markers**	Blank strip label for CPM			White	RTC	1SNA163156R2700		1	10.00
		Label holder				PEFH	1SNA163497R1600		10	
		Blank label for PEFH				RPED	1SNA163518R2200		1	12.00
		Blank card			White	RC610	1SNA233000R0100		10	7.50

1SNC167044S0201

HD4/10.F4.19 stud terminal blocks

Feed-through - 10.5 mm 0.413 in spacing

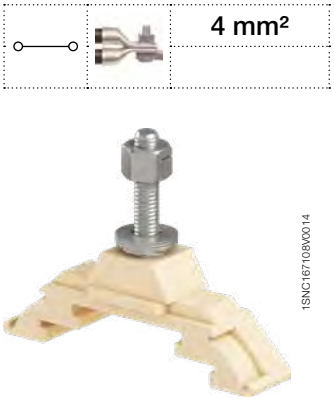

1SNC167108W0014

HD4/10.F4.19

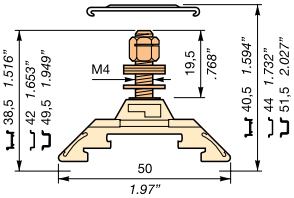

10.5 mm 0.413 in spacing

Description

- 1 stud terminal M4 x 19.5 mm 0.768 in,
- Equipment: H 130 self locking nut + TREP 3L washer + washer.

Ordering details

Description	Color	Type	Part Numbers		Pkg qty	Weight (1 pce) g
1 stud M4	Beige	HD4/10.F4.19	1SNA295298R0300		50	11.00

Main technical data

Connecting capacity		NF C	DIN	NF F 61-017
Wire size	Lug (NF C 20-130)	0.5 ... 4 mm²		
	Lug (DIN 46235 / 46234)		0.5 ... 4 mm²	
	Quick-connect: 6.3 x 0.8 mm			
Rated voltage	V AC	(Cat. C) 500 V		
	V DC	(Cat. C) 500 V		
Rated current		32 A		
Rated cross section		4 mm²		

Mounting instructions

Rail		Type 2, TH 35-7.5, TH 35-15
Tool		Wrench Ø 7 mm Ø 0.276 in
Torque		1.5 N.m 13.3 lb.in

CE RoHS EAC

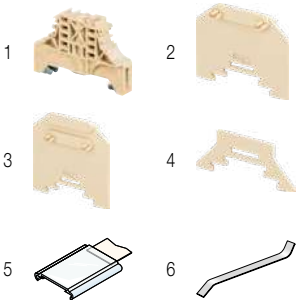

Accessories

	Description				Color	Type	Part Numbers		Pkg qty	Weight (1 pce) g
1	End stops	10 mm	0.394 in		Beige	BAM2	1SNA296351R0000		50	12.00
		8.2 mm	0.323 in			BAH22	1SNA164655R0400		50	10.00
2	End sections	1.5 mm	0.059 in		Beige	FJHD40	1SNA295424R1100		25	4.00
3	Circuit separators	1.5 mm	0.059 in		Beige	FJDHD	1SNA295426R1300		25	4.00
		1.2 mm	0.047 in			SCHD2	1SNA295429R2600		25	2.00
4	Spacers	1.2 mm	0.047 in		Beige	INHD1	1SNA295427R1400		25	2.00
5	Protecting covers	Length 500 mm 19.70 in			Transparent	CPM	1SNA187312R1400		1	25.00
					Beige	CPM	1SNA197312R1600		10	25.00
6	Terminal block markers	Blank strip label for CPM			White	RTC	1SNA163156R2700		1	10.00
		Label holder				PEFH	1SNA163497R1600		10	
		Blank label for PEFH				RPED	1SNA163518R2200		1	12.00
		Blank card			White	RC610	1SNA233000R0100		10	7.50

1SNC167043S0201

HD10/12.F5.3 stud terminal blocks

Feed-through - 12 mm 0.473 in spacing

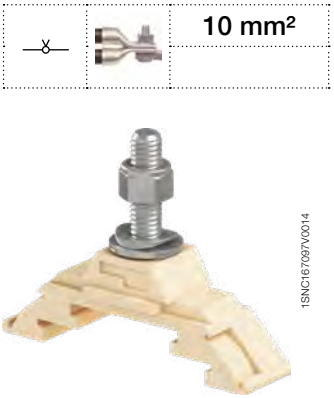

10 mm²

1SNC167097V0014

HD10/12.F5.3

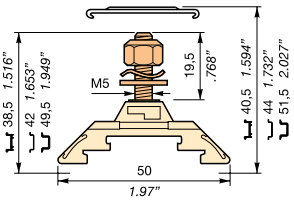

12 mm 0.473 in spacing

Description

- 1 stud terminal M5 x 19.5 mm 0.768 in,
- Equipment: self locking nut + spring washer + washer,
- NF F 61-017 designation: BD13.2-1F5 (1SNA295011R1600 + SCHD2).

Ordering details

Description	Color	Type	Part Numbers		Pkg qty	Weight (1 pce) g
1 stud M5	Beige	HD10/12.F5.3	1SNA295011R1600		50	12.00

Main technical data

Connecting capacity		NF C	DIN	NF F 61-017
Wire size	Lug (NF C 20-130)	0.5 ... 10 mm²		
	Lug (DIN 46235 / 46234)		0.5 ... 10 mm²	
	Quick-connect: 6.3 x 0.8 mm			
Rated voltage	V AC	(Cat. C) 750 V		750 V
	V DC	(Cat. C) 750 V		750 V
Rated current		57 A		51 A
Rated cross section		10 mm²		

Mounting instructions

Rail	Type 2, TH 35-7.5, TH 35-15
Tool	Wrench Ø 8 mm Ø 0.315 in
Torque	2.5 N.m 22.1 lb.in

CE RoHS EAC

The use of a jumper bar requires to use a spacer instead of a circuit separator.

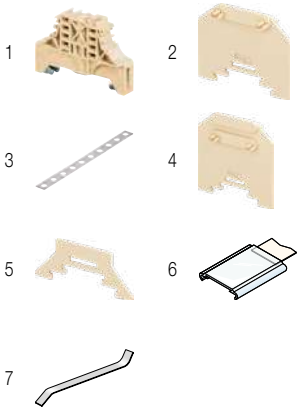

Accessories

	Description			Color	Type	Part Numbers		Pkg qty	Weight (1 pce) g
1	End stops	10 mm	0.394 in	Beige	BAM2	1SNA296351R0000		50	12.00
		8.2 mm	0.323 in		BAH22	1SNA164655R0400		50	10.00
2	End sections	1.5 mm	0.059 in	Beige	FJHD40	1SNA295424R1100		25	4.00
3	Jumper bars	10 poles			BJH131-10	1SNA163468R0000		10	59.00
4	Circuit separators	1.5 mm	0.059 in	Beige	FJDHD	1SNA295426R1300		25	4.00
		1.2 mm	0.047 in		SCHD2	1SNA295429R2600		25	2.00
5	Spacers	1.2 mm	0.047 in	Beige	INHD1	1SNA295427R1400		25	2.00
6	Protecting covers	Length 500 mm 19.70 in		Transparent	CPM	1SNA187312R1400		1	25.00
				Beige	CPM	1SNA197312R1600		10	25.00
7	Terminal block markers	Blank strip label for CPM		White	RTC	1SNA163156R2700		1	10.00
		Label holder			PEFH	1SNA163497R1600		10	
		Blank label for PEFH			RPED	1SNA163518R2200		1	12.00
		Blank card		White	RC610	1SNC233000R0100		10	7.50

1SNC167061S0201

HD10/12.F5 stud terminal blocks

Feed-through - 12 mm 0.473 in spacing

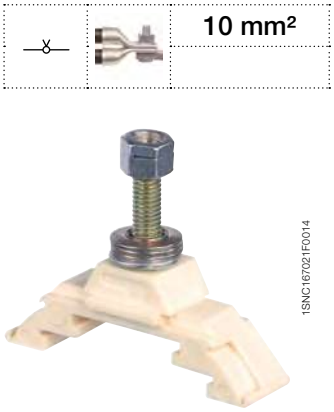

1SNC167021F0014

HD10/12.F5

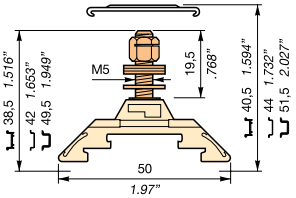

12 mm 0.473 in spacing

10 mm²

Description

- 1 stud terminal M5 x 19.5 mm 0.768 in,
- Equipment: H 130 self locking nut + TREP 3L washer + washer.

Ordering details

Description	Color	Type	Part Numbers		Pkg qty	Weight (1 pce) g
1 stud M5	Beige	HD10/12.F5	1SNA295394R2300		50	11.00

Main technical data

Connecting capacity		NF C	DIN	NF F 61-017
Wire size	Lug (NF C 20-130)	0.5 ... 10 mm²		
	Lug (DIN 46235 / 46234)		0.5 ... 10 mm²	
	Quick-connect: 6.3 x 0.8 mm			
Rated voltage	V AC	(Cat. C) 750 V		
	V DC	(Cat. C) 750 V		
Rated current		57 A		
Rated cross section		10 mm²		

Mounting instructions

Rail		Type 2, TH 35-7.5, TH 35-15
Tool		Wrench Ø 8 mm Ø 0.315 in
Torque		2.5 N.m 22.1 lb.in

CE RoHS EAC

The use of a jumper bar requires to use a spacer instead of a circuit separator.

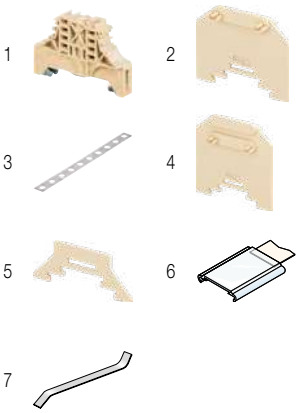

Accessories

	Description				Color	Type	Part Numbers		Pkg qty	Weight (1 pce) g
1	End stops	10 mm	0.394 in		Beige	BAM2	1SNA296351R0000		50	12.00
		8.2 mm	0.323 in			BAH22	1SNA164655R0400		50	10.00
2	End sections	1.5 mm	0.059 in		Beige	FJHD40	1SNA295424R1100		25	4.00
3	Jumper bars	10 poles				BJH131-10	1SNA163468R0000		10	59.00
4	Circuit separators	1.5 mm	0.059 in		Beige	FJDHD	1SNA295426R1300		25	4.00
		1.2 mm	0.047 in			SCHD2	1SNA295429R2600		25	2.00
5	Spacers	1.2 mm	0.047 in		Beige	INHD1	1SNA295427R1400		25	2.00
6	Protecting covers	Length 500 mm 19.70 in			Transparent	CPM	1SNA187312R1400		1	25.00
					Beige	CPM	1SNA197312R1600		10	25.00
7	Terminal block markers	Blank strip label for CPM			White	RTC	1SNA163156R2700		1	10.00
		Label holder				PEFH	1SNA163497R1600		10	
		Blank label for PEFH				RPED	1SNA163518R2200		1	12.00
		Blank card			White	RC610	1SNA233000R0100		10	7.50

1SNC167034S0201

HD10/12.F5 stud terminal blocks

Feed-through - 12 mm 0.473 in spacing

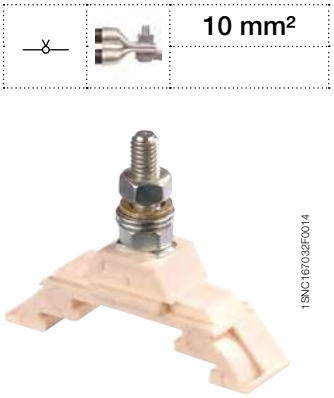

10 mm²

Description

- 1 stud terminal M5 x 19.5 mm 0.768 in,
- Equipment: 1 bottom nut + 2 washers + 1 spring washer + 1 top nut.

1SNC167032F0014

HD10/12.F5

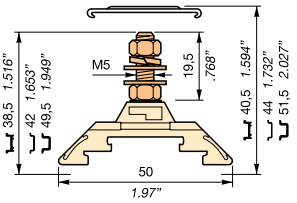

12 mm 0.473 in spacing

Ordering details

Description		Color	Type	Part Numbers		Pkg qty	Weight (1 pce) g
1 stud M5	Steel equipment	Beige	HD10/12.F5.1	1SNA295395R2400		50	11.00
	Brass equipment	Beige	HD10/12.F5.2	1SNA295396R2500		50	11.00
		Yellow	HD10/12.F5.2	1SNA205396R0300		50	11.00

Main technical data

Connecting capacity		NF C	DIN	NF F 61-017
Wire size	Lug (NF C 20-130)	0.5 ... 10 mm²		
	Lug (DIN 46235 / 46234)		0.5 ... 10 mm²	
	Quick-connect: 6.3 x 0.8 mm			
Rated voltage	V AC	(Cat. C) 750 V		
	V DC	(Cat. C) 750 V		
Rated current		57 A		
Rated cross section		10 mm²		

Mounting instructions

Rail		Type 2, TH 35-7.5, TH 35-15
Tool		Wrench Ø 8 mm Ø 0.315 in
Torque		2 N.m 17.7 lb.in

CE RoHS EAC

The use of a jumper bar requires to use a spacer instead of a circuit separator.

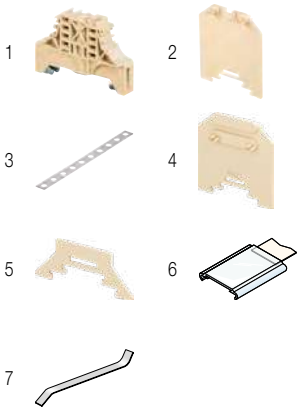

Accessories

	Description				Color	Type	Part Numbers		Pkg qty	Weight (1 pce) g
1	**End stops**	10 mm	0.394 in		Beige	BAM2	1SNA296351R0000		50	12.00
		8.2 mm	0.323 in			BAH22	1SNA164655R0400		50	10.00
2	**End sections**	1.5 mm	0.059 in		Yellow	FJHD40	1SNA205424R2700		25	
					Beige	FJHD40	1SNA295424R1100		25	4.00
3	**Jumper bars**	10 poles				BJH131-10	1SNA163468R0000		10	59.00
4	**Circuit separators**	1.5 mm	0.059 in		Beige	FJDHD	1SNA295426R1300		25	4.00
		1.2 mm	0.047 in		Yellow	SCHD2	1SNA205429R0400		25	2.00
					Beige	SCHD2	1SNA295429R2600		25	2.00
5	**Spacers**	1.2 mm	0.047 in		Yellow	INHD1	1SNA205427R2200		25	
					Beige	INHD1	1SNA295427R1400		25	2.00
6	**Protecting covers**	Length 500 mm 19.70 in			Transparent	CPM	1SNA187312R1400		1	25.00
					Beige	CPM	1SNA197312R1600		10	25.00
7	**Terminal block markers**	Blank strip label for CPM			White	RTC	1SNA163156R2700		1	10.00
		Label holder				PEFH	1SNA163497R1600		10	
		Blank label for PEFH				RPED	1SNA163518R2200		1	12.00
		Blank card			White	RC610	1SNC233000R0100		10	7.50

1SNC167029S0201

HD35/16.F6.19 stud terminal blocks

Feed-through - 16 mm 0.63 in spacing

35 mm²

1SNC167102V0014

HD35/16.F6.19

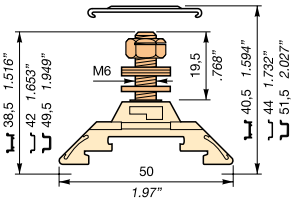

16 mm 0.63 in spacing

Description

- 1 stud terminal M6 x 19.5 mm 0.768 in,
- Equipment: H 130 self locking nut + TREP 3L washer + washer,
- NF F 61-017 designation: BD17.2-1F6 (1SNA295398R0700 + SCHD2).

Ordering details

Description	Color	Type	Part Numbers		Pkg qty	Weight (1 pce) g
1 stud M6	Beige	HD35/16.F6.19	1SNA295398R0700		50	17.00

Main technical data

Connecting capacity		NF C	DIN	NF F 61-017
Wire size	Lug (NF C 20-130)	1.5 ... 35 mm²		
	Lug (DIN 46235 / 46234)		2.5 ... 35 mm²	
	Quick-connect: 6.3 x 0.8 mm			
Rated voltage	V AC	(Cat. C) 750 V		750 V
	V DC	(Cat. C) 750 V		750 V
Rated current		125 A		125 A
Rated cross section		35 mm²		

Mounting instructions

Rail		Type 2, TH 35-7.5, TH 35-15
Tool		Wrench Ø 10 mm Ø 0.394 in
Torque		5.3 N.m 46.9 lb.in

CE RoHS EAC

The use of a jumper bar requires to use a spacer instead of a circuit separator.

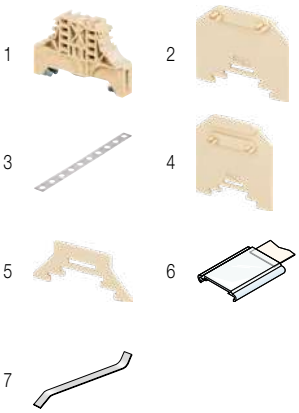

Accessories

	Description				Color	Type	Part Numbers		Pkg qty	Weight (1 pce) g
1	End stops	10 mm	0.394 in		Beige	BAM2	1SNA296351R0000		50	12.00
		8.2 mm	0.323 in			BAH22	1SNA164655R0400		50	10.00
2	End sections	1.5 mm	0.059 in		Beige	FJHD40	1SNA295424R1100		25	4.00
3	Jumper bars	10 poles				BJH17	1SNA163475R2700		10	99.00
4	Circuit separators	1.5 mm	0.059 in		Beige	FJDHD	1SNA295426R1300		25	4.00
		1.2 mm	0.047 in			SCHD2	1SNA295429R2600		25	2.00
5	Spacers	1.2 mm	0.047 in		Beige	INHD1	1SNA295427R1400		25	2.00
6	Protecting covers	Length 500 mm 19.70 in			Transparent	CPM	1SNA187312R1400		1	25.00
					Beige	CPM	1SNA197312R1600		10	25.00
7	Terminal block markers	Blank strip label for CPM			White	RTC	1SNA163156R2700		1	10.00
		Label holder				PEFH	1SNA163497R1600		10	
		Blank label for PEFH				RPED	1SNA163518R2200		1	12.00
		Blank card			White	RC610	1SNA233000R0100		10	7.50

1SNC167027S0201

HD35/16.F6.19.1 stud terminal blocks

Feed-through - 16 mm 0.63 in spacing

35 mm²

1SNC167038F0014

HD35/16.F6.19.1

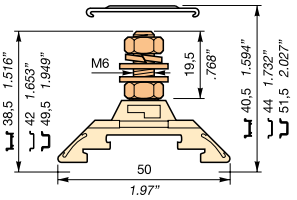

16 mm 0.63 in spacing

Description

- 1 stud terminal M6 x 19.5 mm 0.768 in,
- Equipment: 1 bottom nut + 2 washers + 1 spring washer + 1 top nut.

Ordering details

Description	Color	Type	Part Numbers		Pkg qty	Weight (1 pce) g
1 stud M6	Beige	HD35/16.F6.19.1	1SNA295399R0000		50	17.00

Main technical data

Connecting capacity		NF C	DIN	NF F 61-017
Wire size	Lug (NF C 20-130)	1.5 ... 35 mm²		
	Lug (DIN 46235 / 46234)		2.5 ... 35 mm²	
	Quick-connect: 6.3 x 0.8 mm			
Rated voltage	V AC	(Cat. C) 750 V		
	V DC	(Cat. C) 750 V		
Rated current		125 A		
Rated cross section		35 mm²		

Mounting instructions

Rail		Type 2, TH 35-7.5, TH 35-15
Tool		Wrench Ø 10 mm Ø 0.394 in
Torque		3 N.m 26.6 lb.in

CE RoHS EAC

The use of a jumper bar requires to use a spacer instead of a circuit separator.

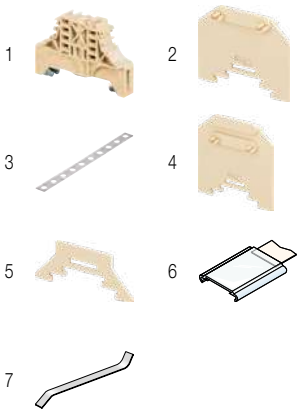

Accessories

	Description				Color	Type	Part Numbers		Pkg qty	Weight (1 pce) g
1	End stops	10 mm	0.394 in		Beige	BAM2	1SNA296351R0000		50	12.00
		8.2 mm	0.323 in			BAH22	1SNA164655R0400		50	10.00
2	End sections	1.5 mm	0.059 in		Beige	FJHD40	1SNA295424R1100		25	4.00
3	Jumper bars	10 poles				BJH17	1SNA163475R2700		10	99.00
4	Circuit separators	1.5 mm	0.059 in		Beige	FJDHD	1SNA295426R1300		25	4.00
		1.2 mm	0.047 in			SCHD2	1SNA295429R2600		25	2.00
5	Spacers	1.2 mm	0.047 in		Beige	INHD1	1SNA295427R1400		25	2.00
6	Protecting covers	Length 500 mm 19.70 in			Transparent	CPM	1SNA187312R1400		1	25.00
					Beige	CPM	1SNA197312R1600		10	25.00
7	Terminal block markers	Blank strip label for CPM			White	RTC	1SNA163156R2700		1	10.00
		Label holder				PEFH	1SNA163497R1600		10	
		Blank label for PEFH				RPED	1SNA163518R2200		1	12.00
		Blank card			White	RC610	1SNA233000R0100		10	7.50

1SNC167056S0201

HD70/22.F8 stud terminal blocks

Feed-through - 22 mm 0.866 in spacing

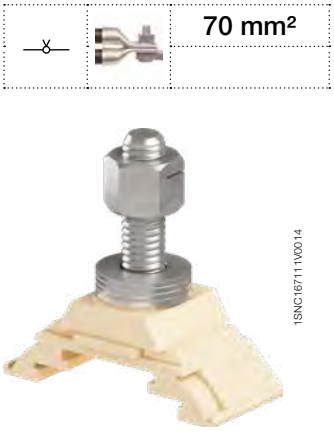

70 mm²

1SNC167111V0014

HD70/22.F8

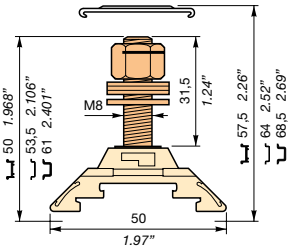

22 mm 0.866 in spacing

Description

- 1 stud terminal M8 x 31.5 mm 1.24 in,
- Equipment: H 130 self locking nut + TREP 3L washer + washer,
- NF F 61-017 designation: BD23.2-1F8 (1SNA295400R0600 + SCH8).

Ordering details

Description	Color	Type	Part Numbers		Pkg qty	Weight (1 pce) g
1 stud M8	Beige	HD70/22.F8.31	1SNA295400R0600		50	39.00

Main technical data

Connecting capacity		NF C	DIN	NF F 61-017
Wire size	Lug (NF C 20-130)	1.5 ... 70 mm²		
	Lug (DIN 46235 / 46234)		2.5 ... 50 mm²	
	Quick-connect: 6.3 x 0.8 mm			
Rated voltage	V AC	(Cat. C) 750 V		750 V
	V DC	(Cat. C) 750 V		750 V
Rated current		192 A		188 A
Rated cross section		70 mm²		

Mounting instructions

Rail		Type 2, TH 35-7.5, TH 35-15
Tool		Wrench Ø 13 mm Ø 0.512 in
Torque		13.4 N.m 118.6 lb.in

CE RoHS EAC

The use of a jumper bar requires to use a spacer instead of a circuit separator.

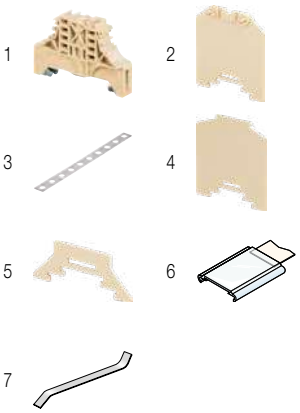

Accessories

	Description				Color	Type	Part Numbers		Pkg qty	Weight (1 pce) g
1	End stops	10 mm	0.394 in		Beige	BAM2	1SNA296351R0000		50	12.00
		10.7 mm	0.421 in			BAH24	1SNA168355R1300		50	12.00
2	End sections	1.5 mm	0.059 in		Beige	FJH501	1SNA199411R1400		25	6.50
3	Jumper bars	10 poles				BJH23-10	1SNA163476R2000		10	185.00
4	Circuit separators	1.2 mm	0.047 in		Beige	SCH8	1SNA199412R1500		25	4.80
5	Spacers	1.2 mm	0.047 in		Beige	INHD1	1SNA295427R1400		25	2.00
6	Protecting covers	Length 500 mm 19.70 in			Transparent	CPM	1SNA187312R1400		1	25.00
					Beige	CPM	1SNA197312R1600		10	25.00
7	Terminal block markers	Blank strip label for CPM			White	RTC	1SNA163156R2700		1	10.00
		Label holder				PEFH	1SNA163497R1600		10	
		Blank label for PEFH				RPED	1SNA163518R2200		1	12.00
		Blank card			White	RC610	1SNA233000R0100		10	7.50

1SNC167028S0201

HD70/22.F8.31 stud terminal blocks

Feed-through - 22 mm 0.866 in spacing

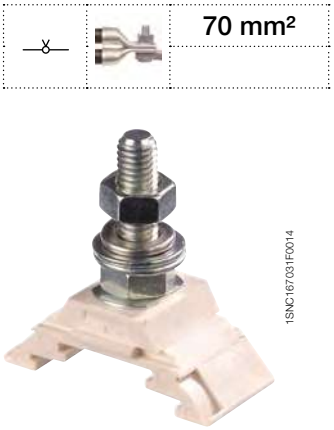

70 mm²

Description

- 1 stud terminal M8 x 31.5 mm 1.24 in,
- Equipment: 1 bottom nut + 2 washers + 1 spring washer + 1 top nut.

1SNC167031F0014

HD70/22.F8.31

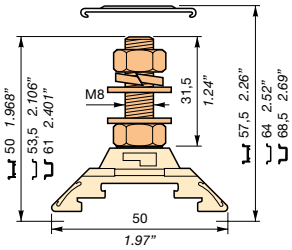

22 mm 0.866 in spacing

Ordering details

Description		Color	Type	Part Numbers		Pkg qty	Weight (1 pce) g
1 stud M8	Steel equipment	Beige	HD70/22.F8.31.1	1SNA295401R2300		50	39.00
	Brass equipment	Beige	HD70/22.F8.31.2	1SNA295402R2400		50	39.00

Main technical data

Connecting capacity		NF C	DIN	NF F 61-017
Wire size	Lug (NF C 20-130)	1.5 ... 70 mm²		
	Lug (DIN 46235 / 46234)		2.5 ... 50 mm²	
	Quick-connect: 6.3 x 0.8 mm			
Rated voltage	V AC	(Cat. C) 750 V		
	V DC	(Cat. C) 750 V		
Rated current		192 A		
Rated cross section		70 mm²		

Mounting instructions

Rail		Type 2, TH 35-7.5, TH 35-15
Tool		Wrench Ø 13 mm Ø 0.512 in
Torque		6 N.m 53.1 lb.in

CE RoHS EAC

The use of a jumper bar requires to use a spacer instead of a circuit separator.

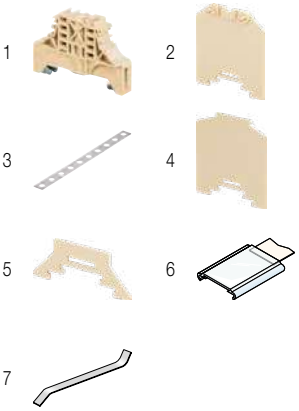

Accessories

	Description			Color	Type	Part Numbers		Pkg qty	Weight (1 pce) g
1	**End stops**	10 mm	0.394 in	Beige	BAM2	1SNA296351R0000		50	12.00
		10.7 mm	0.421 in		BAH24	1SNA168355R1300		50	12.00
2	**End sections**	1.5 mm	0.059 in	Beige	FJH501	1SNA199411R1400		25	6.50
3	**Jumper bars**	10 poles			BJH23-10	1SNA163476R2000		10	185.00
4	**Circuit separators**	1.2 mm	0.047 in	Beige	SCH8	1SNA199412R1500		25	4.80
5	**Spacers**	1.2 mm	0.047 in	Beige	INHD1	1SNA295427R1400		25	2.00
6	**Protecting covers**	Length 500 mm 19.70 in		Transparent	CPM	1SNA187312R1400		1	25.00
				Beige	CPM	1SNA197312R1600		10	25.00
7	**Terminal block markers**	Blank strip label for CPM		White	RTC	1SNA163156R2700		1	10.00
		Label holder			PEFH	1SNA163497R1600		10	
		Blank label for PEFH			RPED	1SNA163518R2200		1	12.00
		Blank card		White	RC610	1SNA233000R0100		10	7.50

1SNC167039S0201

HD120/30.F10.31 stud terminal blocks

Feed-through - 30 mm 1.18 in spacing

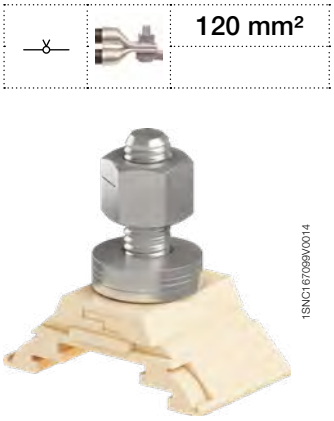

1SNC167099V0014

HD120/30.F10.31

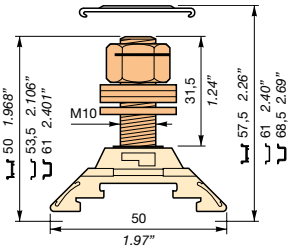

30 mm 1.18 in spacing

120 mm²

Description

- 1 stud terminal M10 x 31.5 mm 1.24 in,
- Equipment: H 130 self locking nut + TREP 3L washer + washer.

Ordering details

Description	Color	Type	Part Numbers		Pkg qty	Weight (1 pce) g
1 stud M10	Beige	HD120/30.F10.31	1SNA295448R0100		10	60.00

Main technical data

Connecting capacity		NF C	DIN	NF F 61-017
Wire size	Lug (NF C 20-130)	10 ... 120 mm²		
	Lug (DIN 46235 / 46234)		6 ... 120 mm²	
	Quick-connect: 6.3 x 0.8 mm			
Rated voltage	V AC	(Cat. C) 750 V		
	V DC	(Cat. C) 750 V		
Rated current		269 A		
Rated cross section		120 mm²		

Mounting instructions

Rail		Type 2, TH 35-7.5, TH 35-15
Tool		Wrench Ø 16 mm Ø 0.63 in
Torque		30 N.m 265.5 lb.in

CE RoHS EAC

The use of a jumper bar requires to use a spacer instead of a circuit separator.

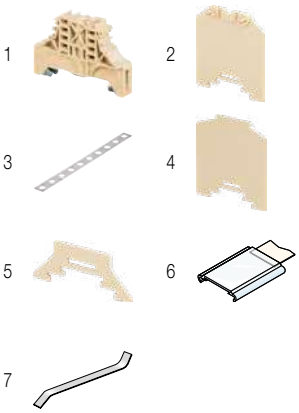

Accessories

	Description				Color	Type	Part Numbers		Pkg qty	Weight (1 pce) g
1	End stops	10 mm	0.394 in		Beige	BAM2	1SNA296351R0000		50	12.00
		10.7 mm	0.421 in			BAH24	1SNA168355R1300		50	12.00
2	End sections	1.5 mm	0.059 in		Beige	FJH501	1SNA199411R1400		25	6.50
3	Jumper bars	10 poles				BJH311	1SNA163479R0300		10	233.00
4	Circuit separators	1.2 mm	0.047 in		Beige	SCH8	1SNA199412R1500		25	4.80
5	Spacers	1.2 mm	0.047 in		Beige	INHD1	1SNA295427R1400		25	2.00
6	Protecting covers	Length 500 mm 19.70 in			Transparent	CPM	1SNA187312R1400		1	25.00
					Beige	CPM	1SNA197312R1600		10	25.00
7	Terminal block markers	Blank strip label for CPM			White	RTC	1SNA163156R2700		1	10.00
		Label holder				PEFH	1SNA163497R1600		10	
		Blank label for PEFH				RPED	1SNA163518R2200		1	12.00
		Blank card			White	RC610	1SNA233000R0100		10	7.50

1SNC167055S0201

HD120/30.F10.31.1 stud terminal blocks

Feed-through - 30 mm 1.18 in spacing

120 mm²

Description

- 1 stud terminal M10 x 31.5 mm 1.24 in,
- Equipment: 1 bottom nut + 2 washers + 1 spring washer + 1 top nut.

1SNC167112V0014

HD120/30.F10.31.1

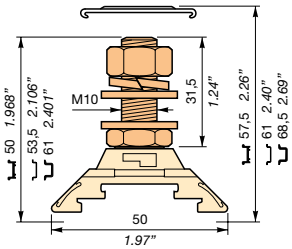

30 mm 1.18 in spacing

Ordering details

Description	Color	Type	Part Numbers		Pkg qty	Weight (1 pce) g
1 stud M10	Beige	HD120/30.F10.31.1	1SNA295403R2500		10	60.00

Main technical data

Connecting capacity		NF C	DIN	NF F 61-017
Wire size	Lug (NF C 20-130)	10 ... 120 mm²		
	Lug (DIN 46235 / 46234)		6 ... 120 mm²	
	Quick-connect: 6.3 x 0.8 mm			
Rated voltage	V AC	(Cat. C) 750 V		
	V DC	(Cat. C) 750 V		
Rated current		269 A		
Rated cross section		120 mm²		

Mounting instructions

Rail		Type 2, TH 35-7.5, TH 35-15
Tool		Wrench Ø 16 mm Ø 0.63 in
Torque		10 N.m 88.5 lb.in

CE RoHS EAC

The use of a jumper bar requires to use a spacer instead of a circuit separator.

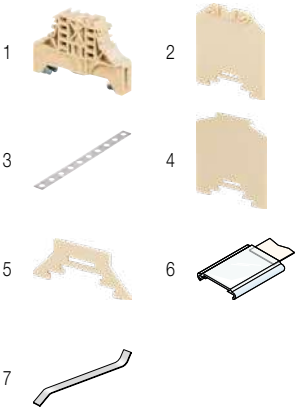

Accessories

	Description				Color	Type	Part Numbers		Pkg qty	Weight (1 pce) g
1	**End stops**	10 mm	0.394 in		Beige	BAM2	1SNA296351R0000		50	12.00
		10.7 mm	0.421 in			BAH24	1SNA168355R1300		50	12.00
2	**End sections**	1.5 mm	0.059 in		Beige	FJH501	1SNA199411R1400		25	6.50
3	**Jumper bars**	10 poles				BJH311	1SNA163479R0300		10	233.00
4	**Circuit separators**	1.2 mm	0.047 in		Beige	SCH8	1SNA199412R1500		25	4.80
5	**Spacers**	1.2 mm	0.047 in		Beige	INHD1	1SNA295427R1400		25	2.00
6	**Protecting covers**	Length 500 mm 19.70 in			Transparent	CPM	1SNA187312R1400		1	25.00
					Beige	CPM	1SNA197312R1600		10	25.00
7	**Terminal block markers**	Blank strip label for CPM			White	RTC	1SNA163156R2700		1	10.00
		Label holder				PEFH	1SNA163497R1600		10	
		Blank label for PEFH				RPED	1SNA163518R2200		1	12.00
		Blank card			White	RC610	1SNA233000R0100		10	7.50

1SNC167059S0201

HD185/36.F12.31.1 stud terminal blocks

Feed-through - 36 mm 1.42 in spacing

185 mm²

1SNC167088V0014

HD185/36.F12.31.1

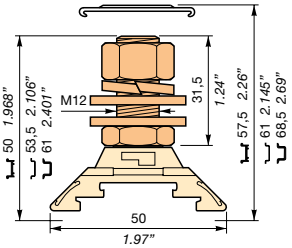

36 mm 1.42 in spacing

Description

- 1 stud terminal M12 x 31.5 mm 1.24 in,
- Equipment: 1 bottom nut + 2 washers + 1 spring washer + 1 top nut.

Ordering details

Description	Color	Type	Part Numbers		Pkg qty	Weight (1 pce) g
1 stud M12	Beige	HD185/36.F12.31.1	1SNA295405R2700		10	79.00

Main technical data

Connecting capacity		NF C	DIN	NF F 61-017
Wire size	Lug (NF C 20-130)	35 ... 185 mm²		
	Lug (DIN 46235 / 46234)		10 ... 150 mm²	
	Quick-connect: 6.3 x 0.8 mm			
Rated voltage	V AC	(Cat. C) 750 V		
	V DC	(Cat. C) 750 V		
Rated current		353 A		
Rated cross section		185 mm²		

Mounting instructions

Rail		Type 2, TH 35-7.5, TH 35-15
Tool		Wrench Ø 18 mm Ø 0.709 in
Torque		14 N.m 123.9 lb.in

CE RoHS EAC

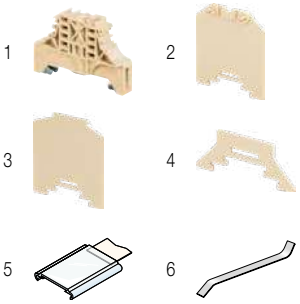

Accessories

	Description				Color	Type	Part Numbers		Pkg qty	Weight (1 pce) g
1	End stops	10 mm	0.394 in		Beige	BAM2	1SNA296351R0000		50	12.00
		10.7 mm	0.421 in			BAH24	1SNA168355R1300		50	12.00
2	End sections	1.5 mm	0.059 in		Beige	FJH501	1SNA199411R1400		25	6.50
3	Circuit separators	1.2 mm	0.047 in		Beige	SCH8	1SNA199412R1500		25	4.80
4	Spacers	1.2 mm	0.047 in		Beige	INHD1	1SNA295427R1400		25	2.00
5	Protecting covers	Length 500 mm 19.70 in			Transparent	CPM	1SNA187312R1400		1	25.00
					Beige	CPM	1SNA197312R1600		10	25.00
6	Terminal block markers	Blank strip label for CPM			White	RTC	1SNA163156R2700		1	10.00
		Label holder				PEFH	1SNA163497R1600		10	
		Blank label for PEFH				RPED	1SNA163518R2200		1	12.00
		Blank card			White	RC610	1SNA233000R0100		10	7.50

1SNC167035S0201

HD4/9.FF4 stud terminal blocks

Feed-through - 9.5 mm 0.374 in spacing

4 mm²

Description

- 2 stud terminals M4 x 11 mm 0.433 in,
- Equipment: self locking nut + spring washer + washer.

1SNC167110V0014

HD4/9.FF4

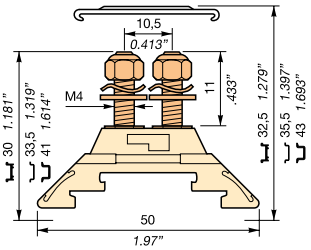

9.5 mm 0.374 in spacing

Ordering details

Description	Color	Type	Part Numbers		Pkg qty	Weight (1 pce) g
2 studs M4	Beige	HD4/9.FF4	1SNA295393R2200		100	6.00

Main technical data

Connecting capacity		NF C	DIN	NF F 61-017
Wire size	Lug (NF C 20-130)	0.5 ... 4 mm²		
	Lug (DIN 46235 / 46234)		0.5 ... 4 mm²	
	Quick-connect: 6.3 x 0.8 mm			
Rated voltage	V AC	(Cat. C) 500 V		
	V DC	(Cat. C) 500 V		
Rated current		32 A		
Rated cross section		4 mm²		

Mounting instructions

Rail		Type 2, TH 35-7.5, TH 35-15
Tool		Wrench Ø 7 mm Ø 0.276 in
Torque		1.2 N.m 10.6 lb.in

CE RoHS EAC

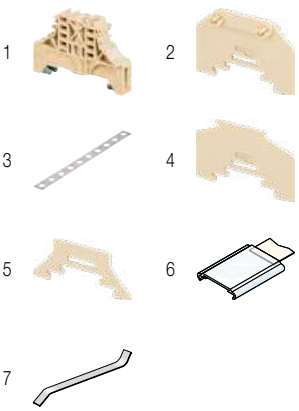

Accessories

	Description				Color	Type	Part Numbers		Pkg qty	Weight (1 pce) g
1	End stops	10 mm	0.394 in		Beige	BAM2	1SNA296351R0000		50	12.00
		8.2 mm	0.323 in			BAH22	1SNA164655R0400		50	10.00
2	End sections	1.5 mm	0.059 in		Beige	FJHD32	1SNA295431R1000		25	4.00
3	Jumper bars	10 poles				BJH105	1SNA163503R2400		10	197.00
4	Circuit separators	1.2 mm	0.047 in		Beige	SCHD1	1SNA295428R2500		25	2.00
5	Spacers	1.2 mm	0.047 in		Beige	INHD1	1SNA295427R1400		25	2.00
6	Protecting covers	Length 500 mm 19.70 in			Transparent	CPM	1SNA187312R1400		1	25.00
					Beige	CPM	1SNA197312R1600		10	25.00
7	Terminal block markers	Blank strip label for CPM			White	RTC	1SNA163156R2700		1	10.00
		Label holder				PEFH	1SNA163497R1600		10	
		Blank label for PEFH				RPED	1SNA163518R2200		1	12.00
		Blank card			White	RC610	1SNA233000R0100		10	7.50

6

1SNC167066S0201

HD6/13.FF4 stud terminal blocks

Feed-through - 13 mm 0.512 in spacing

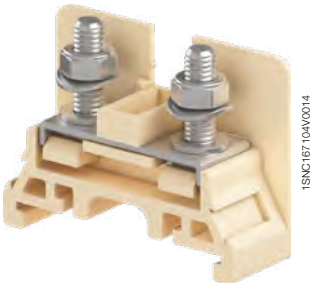

HD6/13.FF4

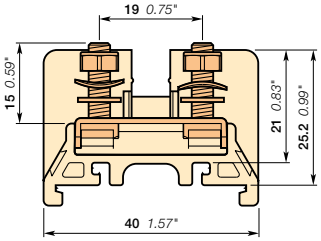

13 mm 0.512 in spacing

Description

- 2 stud terminals M4 x 15 mm 0.531 in,
- Equipment: self locking nut + spring washer + washer,
- NF F 61-017 designation: BE0013-FF4 (1SNA295014R1100).

Ordering details

Description	Color	Type	Part Numbers		Pkg qty	Weight (1 pce) g
2 studs M4	Beige	HD6/13.FF4	1SNA295014R1100		10	15.00

Main technical data

Connecting capacity		NF C	DIN	NF F 61-017
Wire size	Lug (NF C 20-130)	0.5 ... 6 mm²		
	Lug (DIN 46235 / 46234)		0.5 ... 6 mm²	
	Quick-connect: 6.3 x 0.8 mm			
Rated voltage	V AC	(Cat. C) 400 V	(Cat. C) 380 V	380 V
	V DC	(Cat. C) 250 V	(Cat. C) 450 V	380 V
Rated current		51 A	47 A	51 A
Rated cross section		6 mm²		

Mounting instructions

Rail	Type 2, TH 35-7.5, TH 35-15
Tool	Wrench Ø 7 mm Ø 0.276 in
Torque	1.2 N.m 10.6 lb.in

CE RoHS EAC

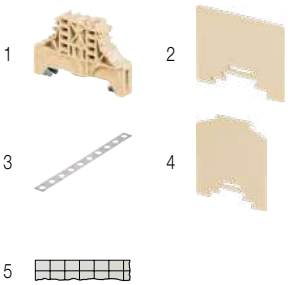

Accessories

	Description			Color	Type	Part Numbers		Pkg qty	Weight (1 pce) g
1	End stops	10 mm	0.394 in	Beige	BAM2	1SNA296351R0000		50	12.00
		7.1 mm	0.28 in		BAH21	1SNA167489R2200		50	8.00
2	End sections	1.5 mm	0.059 in	Beige	FEH8	1SNA198729R0100		25	4.30
3	Jumper bars	10 poles	125 A (IEC)		BJS13-10	1SNA167224R2700		10	10.00
4	Circuit separators	1.2 mm	0.047 in	Beige	SCH8	1SNA199412R1500		25	4.80
5	Terminal block markers	Precut blank label		White	REH3	1SNA163155R2600		1	20.00

1SNC167040S0201

HD10/12.FF5 stud terminal blocks

Feed-through - 12 mm 0.473 in spacing

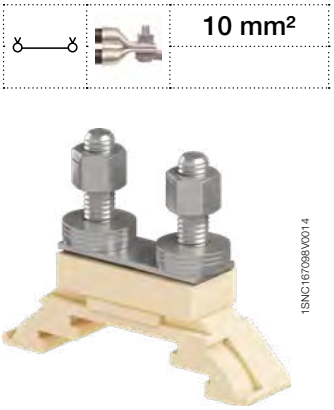

1SNC167098V0014

HD10/12.FF5

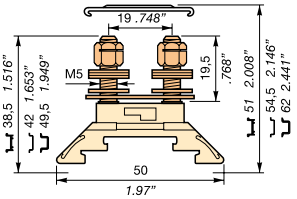

12 mm 0.473 in spacing

	10 mm²

Description

- 2 stud terminals M5 x 19.5 mm 0.768 in,
- Equipment: H 130 self locking nut + TREP 3L washer + washer.

Ordering details

Description	Color	Type	Part Numbers		Pkg qty	Weight (1 pce) g
2 studs M5	Beige	HD10/12.FF5	1SNA295397R2600		50	11.00

Main technical data

Connecting capacity		NF C	DIN	NF F 61-017
Wire size	Lug (NF C 20-130)	0.5 ... 10 mm²		
	Lug (DIN 46235 / 46234)		0.5 ... 10 mm²	
	Quick-connect: 6.3 x 0.8 mm			
Rated voltage	V AC	(Cat. C) 750 V		
	V DC	(Cat. C) 750 V		
Rated current		57 A		
Rated cross section		10 mm²		

Mounting instructions

Rail		Type 2, TH 35-7.5, TH 35-15
Tool		Wrench Ø 8 mm Ø 0.315 in
Torque		2.5 N.m 22.1 lb.in

CE RoHS EAC

The use of a jumper bar requires to use a spacer instead of a circuit separator.

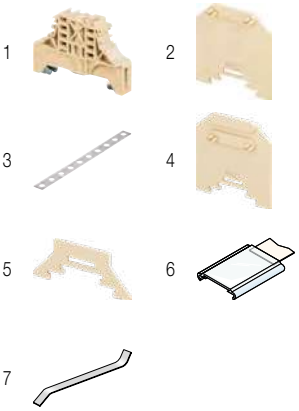

Accessories

	Description				Color	Type	Part Numbers		Pkg qty	Weight (1 pce) g
1	End stops	10 mm	0.394 in		Beige	BAM2	1SNA296351R0000		50	12.00
		8.2 mm	0.323 in			BAH22	1SNA164655R0400		50	10.00
2	End sections	1.5 mm	0.059 in		Beige	FJHD50	1SNA295425R1200		25	4.00
3	Jumper bars	10 poles				BJH131-10	1SNA163468R0000		10	59.00
4	Circuit separators	1.5 mm	0.059 in		Beige	FJDHD	1SNA295426R1300		25	4.00
		1.2 mm	0.047 in			SCHD5	1SNA295430R2300		25	2.00
5	Spacers	1.2 mm	0.047 in		Beige	INHD1	1SNA295427R1400		25	2.00
6	Protecting covers	Length 500 mm 19.70 in			Transparent	CPM	1SNA187312R1400		1	25.00
					Beige	CPM	1SNA197312R1600		10	25.00
7	Terminal block markers	Blank strip label for CPM			White	RTC	1SNA163156R2700		1	10.00
		Label holder				PEFH	1SNA163497R1600		10	
		Blank label for PEFH				RPED	1SNA163518R2200		1	12.00
		Blank card			White	RC610	1SNA233000R0100		10	7.50

1SNC167057S0201

HD16/14.FF5.21.3 stud terminal blocks
Feed-through - 14 mm 0.551 in spacing

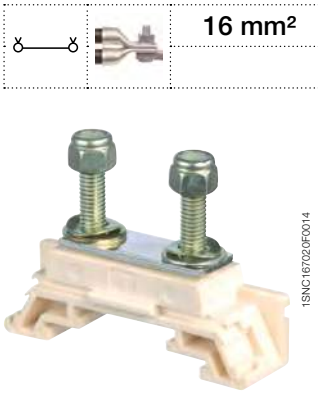

HD16/14.FF5.21.3

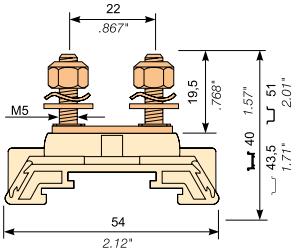

14 mm 0.551 in spacing

16 mm²

Description

- 2 stud terminals M5 x 19.5 mm 0.768 in,
- Equipment: self locking nut + spring washer + washer,
- 18 mm 0.709 in spacing adding SCH6 or INH3,
- Two jumpering options: 14 mm 0.551 in spacing with BJH14 and 18 mm 0.709 in spacing (adding INH3) with BJH18,
- NF F 61-017 designation: BE0018-FF5 (1SNA295012R1700 + SCH6 or INH3).

Ordering details

Description	Color	Type	Part Numbers		Pkg qty	Weight (1 pce) g
2 studs M5	Beige	HD16/14.FF5.21.3	1SNA295012R1700		25	24.00

Main technical data

Connecting capacity		NF C	DIN	NF F 61-017
Wire size	Lug (NF C 20-130)	0.5 ... 16 mm²		
	Lug (DIN 46235 / 46234)		0.5 ... 16 mm²	
	Quick-connect: 6.3 x 0.8 mm			
Rated voltage	V AC	(Cat. C) 500 V	(Cat. C) 500 V	380 V
	V DC	(Cat. C) 500 V	(Cat. C) 600 V	500 V
Rated current		71 A	65 A	71 A
Rated cross section		16 mm²		

Mounting instructions

Rail		Type 2, TH 35-7.5, TH 35-15
Tool		Wrench Ø 8 mm Ø 0.315 in
Torque		2.5 N.m 22.1 lb.in

CE RoHS EAC

The use of a jumper bar requires to use a spacer instead of a circuit separator.

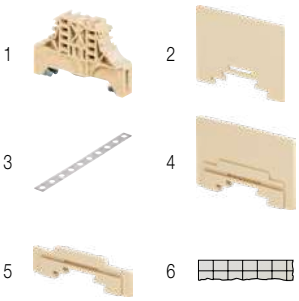

Accessories

	Description				Color	Type	Part Numbers		Pkg qty	Weight (1 pce) g
1	End stops	10 mm	0.394 in		Beige	BAM2	1SNA296351R0000		50	12.00
		8.2 mm	0.323 in			BAH22	1SNA164655R0400		50	10.00
2	End sections	1.5 mm	0.059 in		Beige	FEH8	1SNA198729R0100		25	4.30
3	Jumper bars	2 poles				BJH14-2	1SNA173438R2400		1	5.30
		3 poles				BJH14-3	1SNA173439R2500		10	8.30
		4 poles				BJH14-4	1SNA173441R2700		10	11.20
		5 poles				BJH14-5	1SNA173449R0700		10	14.20
		10 poles				BJH14-10	1SNA173451R2100		1	28.00
		2 poles				BJH18-2	1SNA173452R2200		1	6.20
		3 poles				BJH18-3	1SNA173453R2300		1	9.90
		4 poles				BJH18-4	1SNA173454R2400		1	13.80
		5 poles				BJH18-5	1SNA173460R0600		1	17.50
		10 poles				BJH18-10	1SNA173461R2300		1	36.90
4	Circuit separators	4 mm	0.157 in		Beige	SCH6	1SNA199393R2200		20	
5	Spacers	4 mm	0.157 in		Beige	INH3	1SNA199394R2300		25	2.60
6	Terminal block markers	Precut blank label			White	REH3	1SNA163155R2600		1	20.00
		Blank card				RC610	1SNA233000R0100		10	7.50

1SNC167042S0201

HD16/14.FF5.20.3 stud terminal blocks

Feed-through - 14 mm 0.551 in spacing

16 mm²

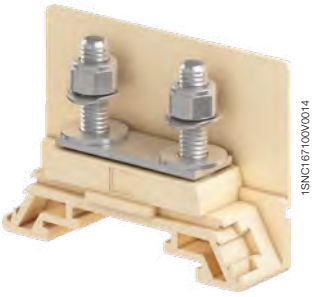

HD16/14.FF5.20.3

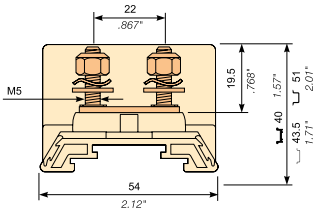

14 mm 0.551 in spacing

Description

- 2 stud terminals M5 x 19.5 mm 0.768 in,
- Equipment: self locking nut + spring washer + washer,
- NF F 61-017 designation: BE0014-FF5 (1SNA295013R1000).

Ordering details

Description	Color	Type	Part Numbers		Pkg qty	Weight (1 pce) g
2 studs M5	Beige	HD16/14.FF5.20.3	1SNA295013R1000		25	26.00

Main technical data

Connecting capacity		NF C	DIN	NF F 61-017
Wire size	Lug (NF C 20-130)	0.5 ... 16 mm²		
	Lug (DIN 46235 / 46234)		0.5 ... 16 mm²	
	Quick-connect: 6.3 x 0.8 mm			
Rated voltage	V AC	(Cat. C) 500 V	(Cat. C) 500 V	380 V
	V DC	(Cat. C) 500 V	(Cat. C) 600 V	500 V
Rated current		71 A	65 A	51 A
Rated cross section		16 mm²		

Mounting instructions

Rail		Type 2, TH 35-7.5, TH 35-15
Tool		Wrench Ø 8 mm Ø 0.315 in
Torque		2.5 N.m 22.1 lb.in

CE RoHS EAC

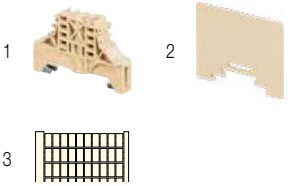

Accessories

	Description				Color	Type	Part Numbers		Pkg qty	Weight (1 pce) g
1	End stops	10 mm	0.394 in		Beige	BAM2	1SNA296351R0000		50	12.00
		8.2 mm	0.323 in			BAH22	1SNA164655R0400		50	10.00
2	End sections	1.5 mm	0.059 in		Beige	FEH8	1SNA198729R0100		25	4.30
3	Terminal block markers	Blank card			White	RC610	1SNA233000R0100		10	7.50

1SNC167063S0201

HD16/14.FF5.21 stud terminal blocks

Feed-through - 14 mm 0.551 in spacing

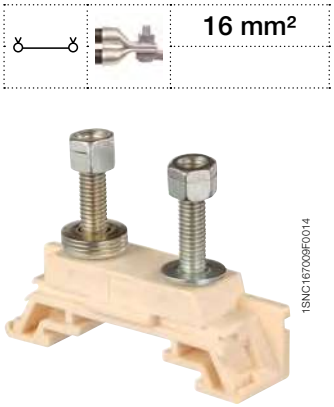

16 mm²

HD16/14.FF5.21

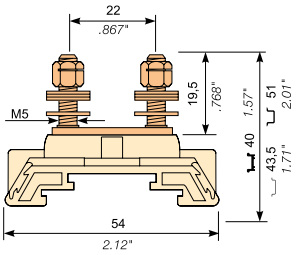

14 mm 0.551 in spacing

Description

- 2 stud terminals M5 x 19.5 mm 0.768 in,
- Equipment: H 130 self locking nut + TREP 3L washer + washer,
- 18 mm 0.709 in spacing adding SCH6 or INH3,
- Two jumpering options: 14 mm 0.551 in spacing with BJH14 and 18 mm 0.709 in spacing (adding INH3) with BJH18.

Ordering details

Description	Color	Type	Part Numbers		Pkg qty	Weight (1 pce) g
2 studs M5	Beige	HD16/14.FF5.21	1SNA162991R1400		25	30.00

Main technical data

Connecting capacity		NF C	DIN	NF F 61-017
Wire size	Lug (NF C 20-130)	0.5 ... 16 mm²		
	Lug (DIN 46235 / 46234)		0.5 ... 16 mm²	
	Quick-connect: 6.3 x 0.8 mm			
Rated voltage	V AC	(Cat. C) 500 V	(Cat. C) 500 V	
	V DC	(Cat. C) 500 V	(Cat. C) 600 V	
Rated current		71 A	65 A	
Rated cross section		16 mm²		

Mounting instructions

Rail		Type 2, TH 35-7.5, TH 35-15
Tool		Wrench Ø 8 mm Ø 0.315 in
Torque		2.5 N.m 22.1 lb.in

CE RoHS EAC

The use of a jumper bar requires to use a spacer instead of a circuit separator.

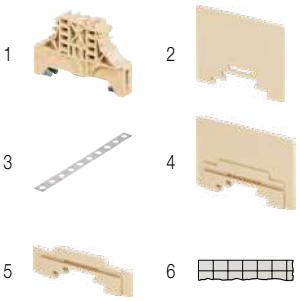

Accessories

	Description			Color	Type	Part Numbers		Pkg qty	Weight (1 pce) g
1	End stops	10 mm	0.394 in	Beige	BAM2	1SNA296351R0000		50	12.00
		8.2 mm	0.323 in		BAH22	1SNA164655R0400		50	10.00
2	End sections	1.5 mm	0.059 in	Beige	FEH8	1SNA198729R0100		25	4.30
3	Jumper bars	2 poles			BJH14-2	1SNA173438R2400		1	5.30
		3 poles			BJH14-3	1SNA173439R2500		10	8.30
		4 poles			BJH14-4	1SNA173441R2700		10	11.20
		5 poles			BJH14-5	1SNA173449R0700		10	14.20
		10 poles			BJH14-10	1SNA173451R2100		1	28.00
		2 poles			BJH18-2	1SNA173452R2200		1	6.20
		3 poles			BJH18-3	1SNA173453R2300		1	9.90
		4 poles			BJH18-4	1SNA173454R2400		1	13.80
		5 poles			BJH18-5	1SNA173460R0600		1	17.50
		10 poles			BJH18-10	1SNA173461R2300		1	36.90
4	Circuit separators	4 mm	0.157 in	Beige	SCH6	1SNA199393R2200		20	
5	Spacers	4 mm	0.157 in	Beige	INH3	1SNA199394R2300		25	2.60
6	Terminal block markers	Precut blank label		White	REH3	1SNA163155R2600		1	20.00
		Blank card			RC610	1SNA233000R0100		10	7.50

1SNC167024S0201

HD16/14.FF5.20 stud terminal blocks

Feed-through - 14 mm 0.551 in spacing

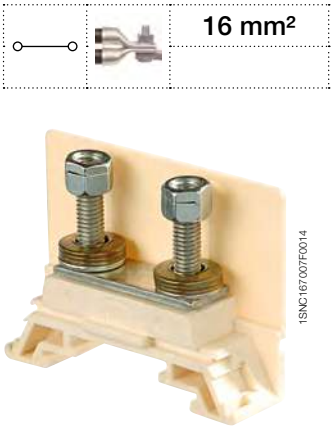

16 mm²

Description

- 2 stud terminals M5 x 19.5 mm 0.768 in,
- Equipment: H 130 self locking nut + TREP 3L washer + washer.

1SNC167007F0014

HD16/14.FF5.20

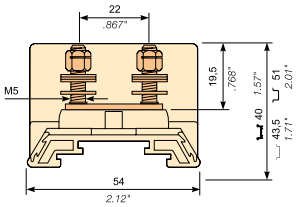

14 mm 0.551 in spacing

Ordering details

Description	Color	Type	Part Numbers		Pkg qty	Weight (1 pce) g
2 studs M5	Beige	HD16/14.FF5.20	1SNA162979R0700		25	27.00

Main technical data

Connecting capacity		NF C	DIN	NF F 61-017
Wire size	Lug (NF C 20-130)	0.5 ... 16 mm²		
	Lug (DIN 46235 / 46234)		0.5 ... 16 mm²	
	Quick-connect: 6.3 x 0.8 mm			
Rated voltage	V AC	(Cat. C) 500 V	(Cat. C) 500 V	380 V
	V DC	(Cat. C) 500 V	(Cat. C) 600 V	500 V
Rated current		71 A	65 A	51 A
Rated cross section		16 mm²		

Mounting instructions

Rail		Type 2, TH 35-7.5, TH 35-15
Tool		Wrench Ø 8 mm Ø 0.315 in
Torque		2.5 N.m 22.1 lb.in

CE RoHS EAC

1

2

3

Accessories

	Description			Color	Type	Part Numbers		Pkg qty	Weight (1 pce) g
1	End stops	10 mm	0.394 in	Beige	BAM2	1SNA296351R0000		50	12.00
		8.2 mm	0.323 in		BAH22	1SNA164655R0400		50	10.00
2	End sections	1.5 mm	0.059 in	Beige	FEH8	1SNA198729R0100		25	4.30
3	Terminal block markers	Precut blank label		White	REH3	1SNA163155R2600		1	20.00
		Blank card			RC610	1SNA233000R0100		10	7.50

6

1SNC167017S0201

D35/27.FF power terminal blocks
Feed-through - 27 mm 1.062 in spacing

35 mm²
1 AWG

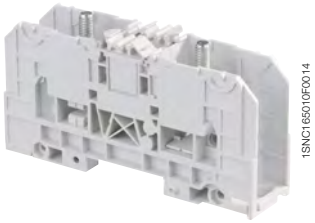

D35/27.FF

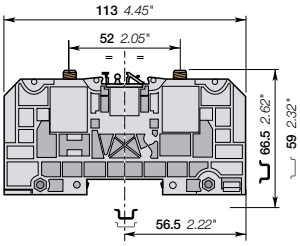

27 mm 1.062 in spacing

Description

- Rated cross section up to 300 mm² / 1000 Kcmil, IP20 protection cover,
- Holding foot on DIN 3 rail with two position for easy mounting, lug mounting in accordance with NF C 20-130 and DIN 46234, various marking options, rail or base mounting.

Ordering details

Description		Color	Type	Part Number		Pkg qty	Weight (1 pce) g
Feed-through	2 studs M6 without cover	Grey	D35/27.FF	1SNA190001R2000		10	130.00

Main technical data

Connecting capacity		NF C	DIN	UL	CSA
Lugs	Rigid: Solid/Stranded	2.5-35 mm²	2.5-50 mm²	1 AWG	
	Flexible with insulated ferrules	2.5-35 mm²	2.5-35 mm²		
	Gauge	C4			

		IEC	UL	CSA
Screw clamp	Rigid: Solid/Stranded			
	Flexible without ferrule			
	Gauge			

	IEC	UL	CSA
Bar			
Rated current	125 A	125 A	
Rated cross section	35 mm²	1 AWG	
Rated voltage	1000 V	600 V	
Impulse withstand voltage	8000 V		

Mounting instructions

Rail		TH 35-7.5, TH 35-15
Lugs Tool		Wrench H10 mm
Torque		3 - 6 N.m 26.1 - 52 lb.in
Jumper screw Tool		Allen key 6 mm 0.236 in
Torque		6 - 12 N.m 52 - 104 lb.in
Screw clamp Tool		
Torque		
Wire stripping length		

The connecting capacity data for one Rigid: Solid/Stranded, or one Flexible conductor (when applicable) is a mandatory information required by IEC, UL and CSA standards (Copper conductors). All other data are provided as supplementary information only. For more details, please consult our CB, UL or CSA certificates and technical datasheet available on http://www.TE.com

RoHS RoHS · USR CNR · Gost R

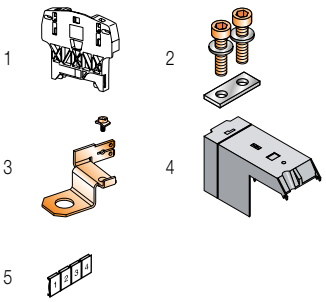

Accessories

	Description			Color	Type	Part Number		Pkg qty	Weight (1 pce) g
1	**End stops**	10 mm	0.394 in	Dark grey	BAZH1	1SNK900102R0000		20	24.00
2	**Jumper bars**	2 poles			BJS27-2	1SNA205772R1300		5	34.00
		3 poles			BJS27-3	1SNA205773R1400		5	52.00
3	**Splitters**	For 6.35x0.8mm faston clips and screws			DRF6	1SNA205767R1600		10	4.00
4	**Protecting covers**	IP20 rotating protecting cover		Grey	CPUF35	1SNA190016R1600		2	8.30
5	**Terminal block markers**	Blank card		White	RC810	1SNA234000R0200		1	8.20

Complete list of accessories is indicated in the terminal block datasheet.
Some accessories such as jumper bars may modify the terminal block's ratings: complete information in the accessories catalogue pages.

Technical data valid for copper conductors only.

1SNC165006S0201 - Rev. C

D70/32.FF power terminal blocks
Feed-through - 32 mm 1.260 in spacing

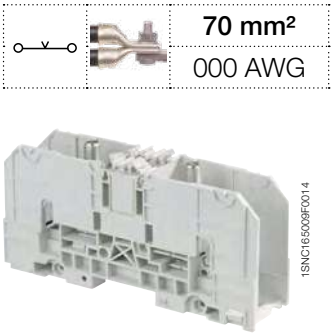

70 mm²	
000 AWG	

D70/32.FF

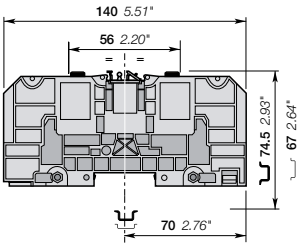

32 mm 1.260 in spacing

Description

- Rated cross section up to 300 mm² / 1000 Kcmil, IP20 protection cover,
- Holding foot on DIN 3 rail with two position for easy mounting, lug mounting in accordance with NF C 20-130 and DIN 46234, various marking options, rail or base mounting.

Ordering details

Description		Color	Type	Part Number		Pkg qty	Weight (1 pce) g
Feed-through	2 studs M8 without cover	Grey	D70/32.FF	1SNA190002R2100		3	269.00

Main technical data

Connecting capacity		NF C	DIN	UL	CSA
Lugs	Rigid: Solid/Stranded	6-95 mm²	6-70 mm²	000 AWG	
	Flexible with insulated ferrules	6-70 mm²	6-70 mm²		
	Gauge	C6			

		IEC	UL	CSA
Screw clamp	Rigid: Solid/Stranded			
	Flexible without ferrule			
	Gauge			

	IEC	UL	CSA
Bar			
Rated current	192 A	170 A	
Rated cross section	70 mm²	000 AWG	
Rated voltage	1000 V	600 V	
Impulse withstand voltage	8000 V		

Mounting instructions

Rail		TH 35-7.5, TH 35-15
Lugs Tool		Wrench H13 mm
Torque		6 - 12 N.m 52 - 104 lb.in
Jumper screw Tool		Allen key 6 mm 0.236 in
Torque		6 - 12 N.m 52 - 104 lb.in
Screw clamp Tool		
Torque		
Wire stripping length		

The connecting capacity data for one Rigid: Solid/Stranded, or one Flexible conductor (when applicable) is a mandatory information required by IEC, UL and CSA standards (Copper conductors). All other data are provided as supplementary information only. For more details, please consult our CB, UL or CSA certificates and technical datasheet available on http://www.TE.com

RoHS RoHS | USR CNR | Gost R

Accessories

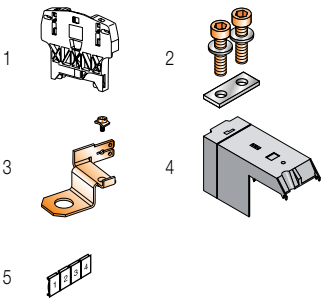

	Description			Color	Type	Part Number		Pkg qty	Weight (1 pce) g
1	**End stops**	10 mm	0.394 in	Dark grey	BAZH1	1SNK900102R0000		20	24.00
2	**Jumper bars**	2 poles			BJS32-2	1SNA205774R1500		5	66.00
		3 poles			BJS32-3	1SNA205775R1600		5	105.80
3	**Splitters**	For 6.35x0.8mm faston clips and screws			DRF8	1SNA205768R2700		10	5.00
4	**Protecting covers**	IP20 rotating protecting cover		Grey	CPUF70	1SNA190017R1700		2	12.00
5	**Terminal block markers**	Blank card		White	RC810	1SNA234000R0200		1	8.20

Complete list of accessories is indicated in the terminal block datasheet.
Some accessories such as jumper bars may modify the terminal block's ratings: complete information in the accessories catalogue pages.

Technical data valid for copper conductors only.

1SNC165005S0201 - Rev. C

D120/42.FF power terminal blocks
Feed-through - 42 mm 1.653 in spacing

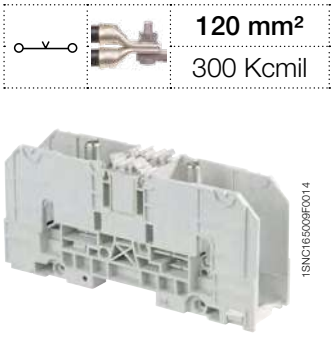

120 mm²	
300 Kcmil	

D120/42.FF

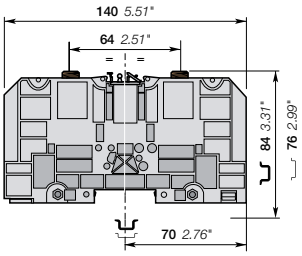

42 mm 1.653 in spacing

Description

- Rated cross section up to 300 mm² / 1000 Kcmil, IP20 protection cover,
- Holding foot on DIN 3 rail with two position for easy mounting, lug mounting in accordance with NF C 20-130 and DIN 46234, various marking options, rail or base mounting.

Ordering details

Description		Color	Type	Part Number		Pkg qty	Weight (1 pce) g
Feed-through	2 studs M10 without cover	Grey	D120/42.FF	1SNA190003R2200		1	423.00

Main technical data

Connecting capacity		NF C	DIN	UL	CSA
Lugs	Rigid: Solid/Stranded	6-150 mm²	6-120 mm²	300 Kcmil	
	Flexible with insulated ferrules	6-120 mm²			
	Gauge	C8			

		IEC	UL	CSA
Screw clamp	Rigid: Solid/Stranded			
	Flexible without ferrule			
	Gauge			

	IEC	UL	CSA
Bar			
Rated current	269 A	269 A	
Rated cross section	120 mm²	300 Kcmil	
Rated voltage	1000 V	600 V	
Impulse withstand voltage	8000 V		

Mounting instructions

Rail	TH 35-7.5, TH 35-15
Lugs Tool	Wrench H17 mm
Torque	10 - 20 N.m 87 - 174 lb.in
Jumper screw Tool	Allen key 6 mm 0.236 in
Torque	6 - 12 N.m 52 - 104 lb.in
Screw clamp Tool	
Torque	
Wire stripping length	

The connecting capacity data for one Rigid: Solid/Stranded, or one Flexible conductor (when applicable) is a mandatory information required by IEC, UL and CSA standards (Copper conductors). All other data are provided as supplementary information only. For more details, please consult our CB, UL or CSA certificates and technical datasheet available on http://www.TE.com

RoHS — USR CNR — Gost R

Accessories

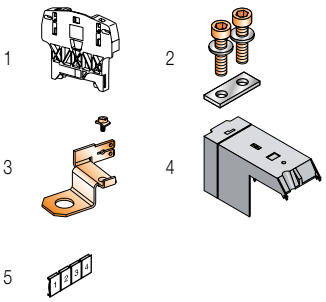

	Description			Color	Type	Part Number		Pkg qty	Weight (1 pce) g
1	**End stops**	10 mm	0.394 in	Dark grey	BAZH1	1SNK900102R0000		20	24.00
2	**Jumper bars**	2 poles			BJS42-2	1SNA205776R1700		5	93.00
		3 poles			BJS42-3	1SNA205777R1000		5	153.00
3	**Splitters**	For 6.35x0.8mm faston clips and screws			DRF10	1SNA205769R2000		10	7.00
4	**Protecting covers**	IP20 rotating protecting cover		Grey	CPUF120	1SNA190018R2000		2	24.00
5	**Terminal block markers**	Blank card		White	RC810	1SNA234000R0200		1	8.20

Complete list of accessories is indicated in the terminal block datasheet.
Some accessories such as jumper bars may modify the terminal block's ratings: complete information in the accessories catalogue pages.

Technical data valid for copper conductors only.

1SNC165004S0201 - Rev. C

D185/55.FF power terminal blocks
Feed-through - 55 mm 2.165 in spacing

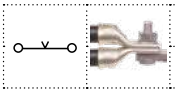

185 mm²
500 Kcmil

D185/55.FF

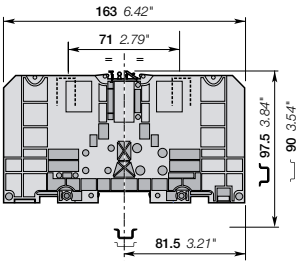

55 mm 2.165 in spacing

Description

- Rated cross section up to 300 mm² / 1000 Kcmil, IP20 protection cover,
- Holding foot on DIN 3 rail with two position for easy mounting, lug mounting in accordance with NF C 20-130 and DIN 46234, various marking options, rail or base mounting.

Ordering details

Description		Color	Type	Part Number		Pkg qty	Weight (1 pce) g
Feed-through	2 studs M12 without cover	Grey	D185/55.FF	1SNA190004R2300		1	615.00

Main technical data

Connecting capacity		NF C	DIN	UL	CSA
Lugs	Rigid: Solid/Stranded	25-240 mm²	6-185 mm²	500 Kcmil	
	Flexible with insulated ferrules	6-185 mm²			
	Gauge	C11			

		IEC	UL	CSA
Screw clamp	Rigid: Solid/Stranded			
	Flexible without ferrule			
	Gauge			

	IEC	UL	CSA
Bar			
Rated current	353 A	353 A	
Rated cross section	185 mm²	500 Kcmil	
Rated voltage	1000 V	600 V	
Impulse withstand voltage	8000 V		

Mounting instructions

Rail		TH 35-7.5, TH 35-15
Lugs Tool		Wrench H24 mm
Torque		14 - 30 N.m 123.9 - 265.5 lb.in
Jumper screw Tool		Allen key 6 mm 0.236 in
Torque		6 - 12 N.m 52 - 104 lb.in
Screw clamp Tool		
Torque		
Wire stripping length		

The connecting capacity data for one Rigid: Solid/Stranded, or one Flexible conductor (when applicable) is a mandatory information required by IEC, UL and CSA standards (Copper conductors). All other data are provided as supplementary information only. For more details, please consult our CB, UL or CSA certificates and technical datasheet available on http://www.TE.com

RoHS USR CNR Gost R

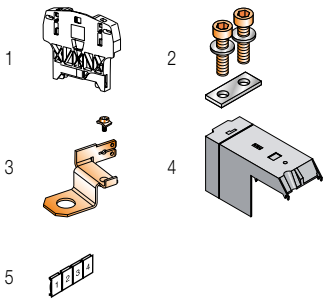

Accessories

	Description			Color	Type	Part Number		Pkg qty	Weight (1 pce) g
1	**End stops**	10 mm	0.394 in	Dark grey	BAZH1	1SNK900102R0000		20	24.00
2	**Jumper bars**	2 poles			BJS551-2	1SNA205778R2100		5	158.00
		3 poles			BJS551-3	1SNA205779R2200		5	266.00
3	**Splitters**	For 6.35x0.8mm faston clips and screws			DRF12	1SNA205770R2500		10	8.00
4	**Protecting covers**	IP20 rotating protecting cover		Grey	CPUF185	1SNA190019R2100		2	40.00
5	**Terminal block markers**	Blank card		White	RC810	1SNA234000R0200		1	8.20

Complete list of accessories is indicated in the terminal block datasheet.
Some accessories such as jumper bars may modify the terminal block's ratings: complete information in the accessories catalogue pages.

Technical data valid for copper conductors only.

1SNC165010S0201 - Rev. C

D300/55.FF power terminal blocks
Feed-through - 55 mm 2.165 in spacing

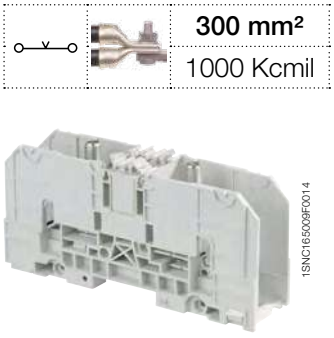

D300/55.FF

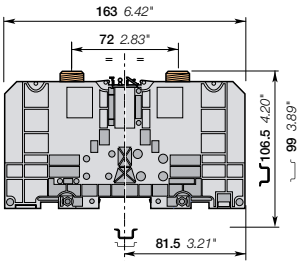

55 mm 2.165 in spacing

Description

- Rated cross section up to 300 mm² / 1000 Kcmil, IP20 protection cover,
- Holding foot on DIN 3 rail with two position for easy mounting, lug mounting in accordance with NF C 20-130 and DIN 46234, various marking options, rail or base mounting.

Ordering details

Description		Color	Type	Part Number		Pkg qty	Weight (1 pce) g
Feed-through	2 studs M16 without cover	Grey	D300/55.FF	1SNA190005R2400		1	775.00

Main technical data

Connecting capacity		NF C	DIN	UL	CSA
Lugs	Rigid: Solid/Stranded	25-300 mm²	6-300 mm²	1000 Kcmil	
	Flexible with insulated ferrule	6-300 mm²			
	Gauge				

		IEC	UL	CSA
Screw clamp	Rigid: Solid/Stranded			
	Flexible without ferrule			
	Gauge			

	IEC	UL	CSA
Bar			
Rated current	520 A	460 A	
Rated cross section	300 mm²	1000 Kcmil	
Rated voltage	1000 V	600 V	
Impulse withstand voltage	8000 V		

Mounting instructions

Rail	TH 35-7.5, TH 35-15
Lugs Tool	Wrench H24 mm
Torque	25 - 50 N.m 217 - 435 lb.in
Jumper screw Tool	Allen key 6 mm 0.236 in
Torque	6 - 12 N.m 52 - 104 lb.in
Screw clamp Tool	
Torque	
Wire stripping length	

The connecting capacity data for one Rigid: Solid/Stranded, or one Flexible conductor (when applicable) is a mandatory information required by IEC, UL and CSA standards (Copper conductors). All other data are provided as supplementary information only. For more details, please consult our CB, UL or CSA certificates and technical datasheet available on http://www.TE.com

RoHS — USR CNR — Gost R

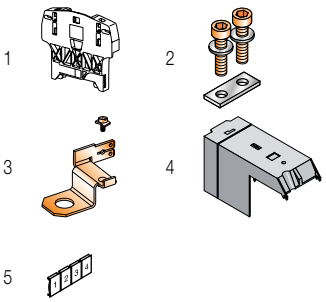

Accessories

	Description			Color	Type	Part Number		Pkg qty	Weight (1 pce) g
1	**End stops**	10 mm	0.394 in	Dark grey	BAZH1	1SNK900102R0000		20	24.00
2	**Jumper bars**	2 poles			BJS551-2	1SNA205778R2100		5	158.00
		3 poles			BJS551-3	1SNA205779R2200		5	266.00
3	**Splitters**	For 6.35x0.8mm faston clips and screws			DRF16	1SNA205771R1200		10	7.00
4	**Protecting covers**	IP20 rotating protecting cover		Grey	CPUF185	1SNA190019R2100		2	40.00
5	**Terminal block markers**	Blank card		White	RC810	1SNA234000R0200		1	8.20

Complete list of accessories is indicated in the terminal block datasheet.
Some accessories such as jumper bars may modify the terminal block's ratings: complete information in the accessories catalogue pages.

Technical data valid for copper conductors only.

1SNC165011S0201 - Rev. C

RGW2.5 Ring lug terminal blocks
Feed-through - 9 mm 0.354 in spacing

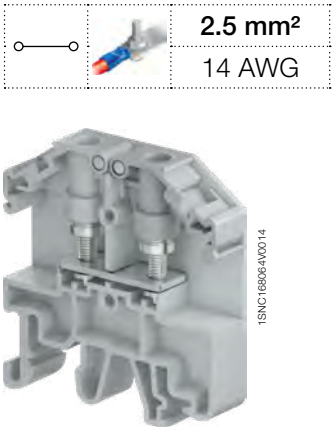

2.5 mm²
14 AWG

1SNC168064V0014

RGW2.5

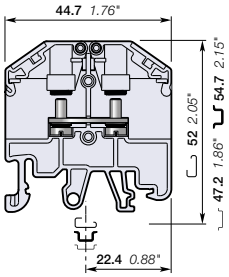

9 mm 0.354 in spacing

Description

- Stud terminal block for ring lug connection,
- Integrated captive nuts in protective wings provide easy and secured connection,
- Universal mounting on symmetrical and asymmetrical rails.

Ordering details

Description		Color	Type	Part Numbers		Pkg qty	Weight (1 pce) g
Feed-through	With 2 studs M3 and captive nuts in wings	Grey	RGW2.5-V0	1SNA510003R0000		45	11.78

Main technical data

		IEC	UL	CSA
Lugs	Rigid: Solid/Stranded	0.1 ... 2.5 mm²	26 ... 14 AWG	26 ... 14 AWG
	Flexible with insulated ferrule	0.1 ... 2.5 mm²		
	Gauge			
Rated current		24 A	15 A	20 A
Maximum current			20 A	
Rated cross section		2.5 mm²	14 AWG	14 AWG
Rated short-time withstand current (1s)		300 A		
Rated voltage		800 V	600 V	600 V
Impulse withstand voltage		8000 V		
Protection		IP10	NEMA 1	

Mounting instructions

Rail	G32, TH 35-7.5, TH 35-15
Nuts Tool	Flat screwdriver Ø 4 mm Ø 0.157 in
Torque	0.6 ... 0.8 N.m 5.3 ... 7.1 lb.in
Max width of lug	7 mm 0.28 in

The connecting capacity data for one Rigid: Solid/Stranded, or one Flexible conductor (when applicable) is a mandatory information required by IEC, UL and CSA standards (Copper conductors).
All other data are provided as supplementary information only. For more details, please consult our CB, UL or CSA certificates and technical datasheet available on http://www.TE.com

CE RoHS USR CNR CSA

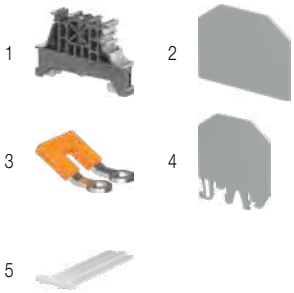

Accessories

	Description			Color	Type	Part Numbers		Pkg qty	Weight (1 pce) g
1	**End stops**	10 mm	0.394 in	Dark grey	BAM4	1SNK900001R0000		50	14.00
2	**End sections**	1.2 mm	0.047 in	Grey	E-RGW2.5	1SNA519003R0000		25	1.89
3	**Lateral jumper bars**	2 poles	24 A (IEC)	Orange	PC-RG2.5-2	1SNA519103R0200		25	3.02
		3 poles	24 A (IEC)		PC-RG2.5-3	1SNA519103R0300		20	4.69
		4 poles	24 A (IEC)		PC-RG2.5-4	1SNA519103R0400		15	6.36
		10 poles	24 A (IEC)		PC-RG2.5-10	1SNA519103R1000		5	16.39
4	**Circuit separators**	1.5 mm	0.059 in	Grey	CS-RGW-S	1SNA519200R0000		25	4.59
5	**Terminal block markers**	Blank marker		White	M-W610PC	1SNA235511R0600		360	8.03
					MG-CPM-01 41090	1SNB041090R0510		1960	0.351

Complete list of accessories is indicated in the terminal block datasheet including end stops.
Some accessories such as jumper bars may modify the terminal block's ratings: Complete information available in the accessories section of the catalog.

Ground Ring lug terminal blocks

Description		Color	Type	Part Numbers		Pkg qty	Weight (1 pce) g
Ground	With 2 studs M3 and captive nuts in wings	Green-yellow	RGW2.5-PE-V0	1SNA511003R0500		45	28.56

Technical data valid for copper conductors only.

1SNC168024S0201

RGW6 Ring lug terminal blocks
Feed-through - 11 mm 0.433 in spacing

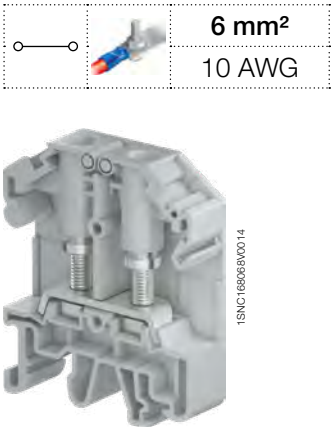

RGW6

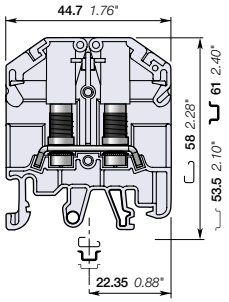

11 mm 0.433 in spacing

6 mm²
10 AWG

Description

- Stud terminal block for ring lug connection,
- Integrated captive nuts in protective wings provide easy and secured connection,
- Universal mounting on symmetrical and asymmetrical rails.

Ordering details

Description		Color	Type	Part Numbers		Pkg qty	Weight (1 pce) g
Feed-through	With 2 studs M4 and captive nuts in wings	Grey	RGW6-V0	1SNA510024R0000		40	19.76

Main technical data

		IEC	UL	CSA
Lugs	Rigid: Solid/Stranded	0.1 ... 6 mm²	22 ... 10 AWG	22 ... 10 AWG
	Flexible with insulated ferrule	0.1 ... 6 mm²		
	Gauge			
Rated current		41 A	30 A	30 A
Maximum current			30 A	
Rated cross section		6 mm²	10 AWG	10 AWG
Rated short-time withstand current (1s)		720 A		
Rated voltage		800 V	600 V	600 V
Impulse withstand voltage		8000 V		
Protection		IP10	NEMA 1	

Mounting instructions

Rail	G32, TH 35-7.5, TH 35-15
Nuts	Flat screwdriver
Tool	Ø 5.5 mm Ø 0.217 in
Torque	0.8 ... 1.2 N.m 7.1 ... 10.6 lb.in
Max width of lug	9.4 mm 0.37 in

The connecting capacity data for one Rigid: Solid/Stranded, or one Flexible conductor (when applicable) is a mandatory information required by IEC, UL and CSA standards (Copper conductors). All other data are provided as supplementary information only. For more details, please consult our CB, UL or CSA certificates and technical datasheet available on http://www.TE.com

CE RoHS USR CNR CSA

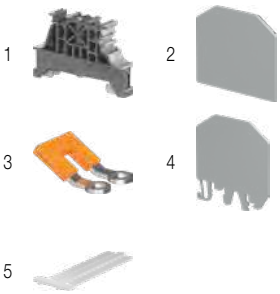

Accessories

	Description			Color	Type	Part Numbers		Pkg qty	Weight (1 pce) g
1	**End stops**	10 mm	0.394 in	Dark grey	BAM4	1SNK900001R0000		50	14.00
2	**End sections**	1.4 mm	0.055 in	Grey	E-RGW6	1SNA519004R0000		50	2.65
3	**Lateral jumper bars**	2 poles	41 A (IEC)	Orange	PC-RG6-2	1SNA519104R0200		25	3.44
		3 poles	41 A (IEC)		PC-RG6-3	1SNA519104R0300		20	5.40
		4 poles	41 A (IEC)		PC-RG6-4	1SNA519104R0400		15	7.33
		7 poles	41 A (IEC)		PC-RG6-7	1SNA519104R0700		5	13.24
		10 poles	41 A (IEC)		PC-RG6-10	1SNA519104R1000		5	19.05
4	**Circuit separators**	1.5 mm	0.059 in	Grey	CS-RGW-S	1SNA519200R0000		25	4.59
5	**Terminal block markers**	Blank marker		White	M-W810PC	1SNA235510R0800		260	0.27
					MG-CPM-01 41096	1SNB041096R0810		1120	0.400

Complete list of accessories is indicated in the terminal block datasheet including end stops.
Some accessories such as jumper bars may modify the terminal block's ratings: Complete information available in the accessories section of the catalog.

Ground Ring lug terminal blocks

Description		Color	Type	Part Numbers		Pkg qty	Weight (1 pce) g
Ground	With 2 studs M4 and captive nuts in wings	Green-yellow	RGW6-PE-V0	1SNA511024R0500		40	31.76

Technical data valid for copper conductors only.

1SNC168016S0201

RGW25-M5 Ring lug terminal blocks
Feed-through - 18 mm 0.709 in spacing

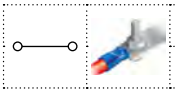

25 mm²
4 AWG

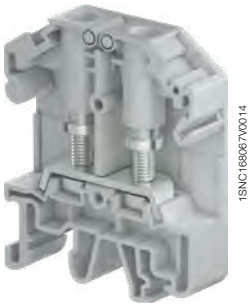

RGW25-M5

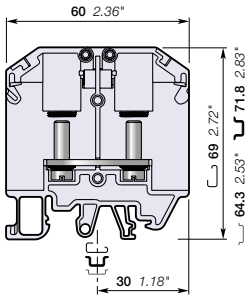

18 mm 0.709 in spacing

Description

- Stud terminal block for ring lug connection,
- Integrated captive nuts in protective wings provide easy and secured connection,
- Universal mounting on symmetrical and asymmetrical rails.

Ordering details

Description		Color	Type	Part Numbers		Pkg qty	Weight (1 pce) g
Feed-through	With 2 studs M5 and captive nuts in wings	Grey	RGW25-M5-V0	1SNA510005R0000		10	49.10

Main technical data

		IEC	UL	CSA
Lugs	Rigid: Solid/Stranded	0.1 ... 25 mm²	26 ... 4 AWG	26 ... 4 AWG
	Flexible with insulated ferrule	0.1 ... 25 mm²		
	Gauge			
Rated current		101 A	85 A	100 A
Maximum current			115 A	
Rated cross section		25 mm²	4 AWG	4 AWG
Rated short-time withstand current (1s)		3000 A		
Rated voltage		800 V	600 V	600 V
Impulse withstand voltage		8000 V		
Protection		IP10	NEMA 1	

Mounting instructions

Rail	G32, TH 35-7.5, TH 35-15
Nuts	Flat screwdriver
Tool	Ø 5.5 mm Ø 0.217 in
Torque	3 ... 3.5 N.m 26.5 ...31 lb.in
Max width of lug	16.2 mm 0.64 in

The connecting capacity data for one Rigid: Solid/Stranded, or one Flexible conductor (when applicable) is a mandatory information required by IEC, UL and CSA standards (Copper conductors). All other data are provided as supplementary information only. For more details, please consult our CB, UL or CSA certificates and technical datasheet available on http://www.TE.com

CE RoHS USR CNR CSA

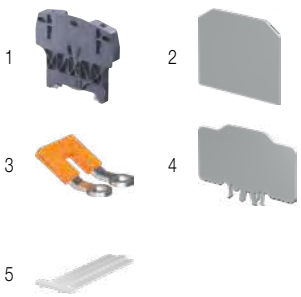

Accessories

	Description			Color	Type	Part Numbers		Pkg qty	Weight (1 pce) g
1	**End stops**	10 mm	0.394 in	Dark grey	BAZH1	1SNK900102R0000		20	24.00
2	**End sections**	1.4 mm	0.055 in	Grey	E-RGW25	1SNA519005R0000		25	0.146
3	**Lateral jumper bars**	2 poles	101 A (IEC)	Orange	PC-RG25-2	1SNA519106R0200		25	8.81
4	**Circuit separators**	2 mm	0.079 in	Grey	CS-RGW-L	1SNA519201R0000		25	13.72
5	**Terminal block markers**	Blank marker		White	M-W1010PC	1SNA235512R1000		200	0.10
					MG-CPM-01 41096	1SNB041096R0810		1120	0.400

Complete list of accessories is indicated in the terminal block datasheet including end stops.
Some accessories such as jumper bars may modify the terminal block's ratings: Complete information available in the accessories section of the catalog.

Technical data valid for copper conductors only.

1SNC168028S0201

RGW25-M6 Ring lug terminal blocks

Feed-through - 18 mm 0.709 in spacing

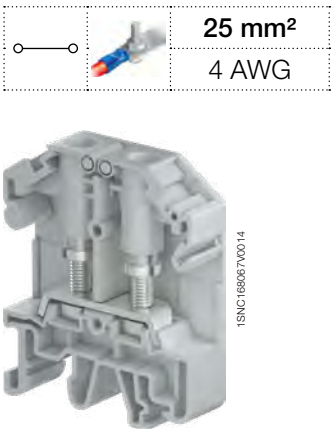

RGW25-M6

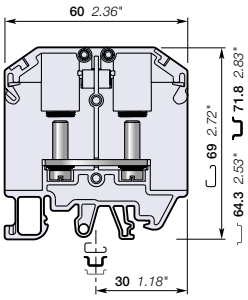

18 mm 0.709 in spacing

	25 mm²
	4 AWG

Description

- Stud terminal block for ring lug connection,
- Integrated captive nuts in protective wings provide easy and secured connection,
- Universal mounting on symmetrical and asymmetrical rails.

Ordering details

Description		Color	Type	Part Numbers		Pkg qty	Weight (1 pce) g
Feed-through	With 2 studs M6 and captive nuts in wings	Grey	RGW25-M6-V0	1SNA510006R0000		10	48.44

Main technical data

		IEC	UL	CSA
Lugs	Rigid: Solid/Stranded	0.1 ... 25 mm²	26 ... 4 AWG	26 ... 4 AWG
	Flexible with insulated ferrule	0.1 ... 25 mm²		
	Gauge			
Rated current		101 A	85 A	100 A
Maximum current			115 A	
Rated cross section		25 mm²	4 AWG	4 AWG
Rated short-time withstand current (1s)		3000 A		
Rated voltage		800 V	600 V	600 V
Impulse withstand voltage		8000 V		
Protection		IP10	NEMA 1	

Mounting instructions

Rail		G32, TH 35-7.5, TH 35-15
Nuts Tool		Flat screwdriver Ø 5.5 mm Ø 0.217 in
Torque		3.2 ... 3.5 N.m 28.3 ...32.7 lb.in
Max width of lug		16.2 mm 0.64 in

The connecting capacity data for one Rigid: Solid/Stranded, or one Flexible conductor (when applicable) is a mandatory information required by IEC, UL and CSA standards (Copper conductors). All other data are provided as supplementary information only. For more details, please consult our CB, UL or CSA certificates and technical datasheet available on http://www.TE.com

CE RoHS USR CNR CSA

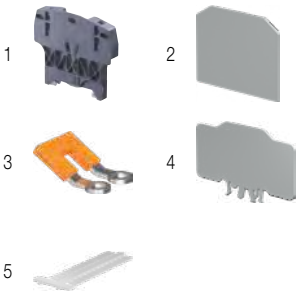

Accessories

	Description			Color	Type	Part Numbers		Pkg qty	Weight (1 pce) g
1	**End stops**	10 mm	0.394 in	Dark grey	BAZH1	1SNK900102R0000		20	24.00
2	**End sections**	1.4 mm	0.055 in	Grey	E-RGW25	1SNA519005R0000		25	0.146
3	**Lateral jumper bars**	2 poles	101 A (IEC)	Orange	PC-RG25-2	1SNA519106R0200		25	8.81
4	**Circuit separators**	2 mm	0.079 in	Grey	CS-RGW-L	1SNA519201R0000		25	13.72
5	**Terminal block markers**	Blank marker		White	M-W1010PC	1SNA235512R1000		200	0.10
					MG-CPM-01 41096	1SNB041096R0810		1120	0.400

Complete list of accessories is indicated in the terminal block datasheet including end stops.
Some accessories such as jumper bars may modify the terminal block's ratings: Complete information available in the accessories section of the catalog.

Technical data valid for copper conductors only.

1SNC168029S0201

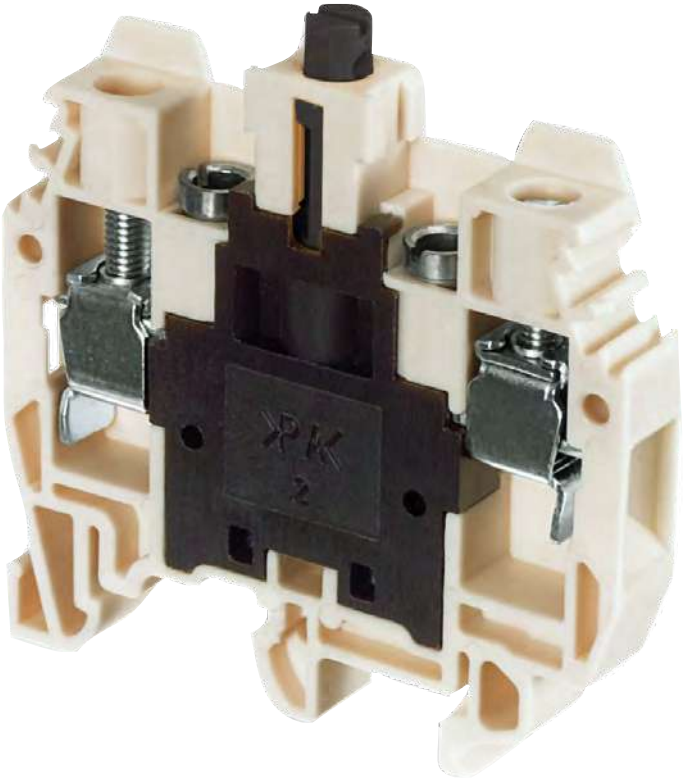

Railway applications, terminal blocks
Screw clamp technology complying with NF F 55251

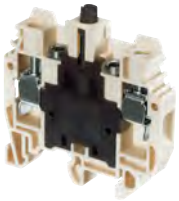

Technologies presentation			208
Overview			210

Feed-through

2.5 mm²	**E4/6**		211
6 mm²	**E6/8**		212
10 mm²	**E10/16**		213

Disconnect with push-turn knob

6 mm²	**M6/8.STP**	1/4 turn push-turn knob	214
	ES8-CG	1/4 turn push-turn knob - contact protected by dust cover	215

Disconnect with plug

10 mm²	**E10/16.S**		216

The proven reliability and performance for railway infrastructure

The screw clamp technology complying with NF F 55251 and CT448 minimizes maintenance & trouble shooting operations thanks to the anti-release system. The screw is locked in total safety.
The high density capacity screw clamp connection can fit up to two conductors per clamp which offers extended possibilities in electrical cabinets.

CE RoHS EAC

Reliable in harsh conditions

Excellent withstand in corrosive atmosphere

- Self-cleaning push-turn knob
- Stainless steel screw
- Nickeled copper alloy compression clamp
- Dust protection covering.

Continuous operations

Maintenance and trouble shooting operations are minimized

- Thanks to our anti-release system
- Screw is locked in total safety.

1SNC160250S0201

Features

Focus on ES8-CG

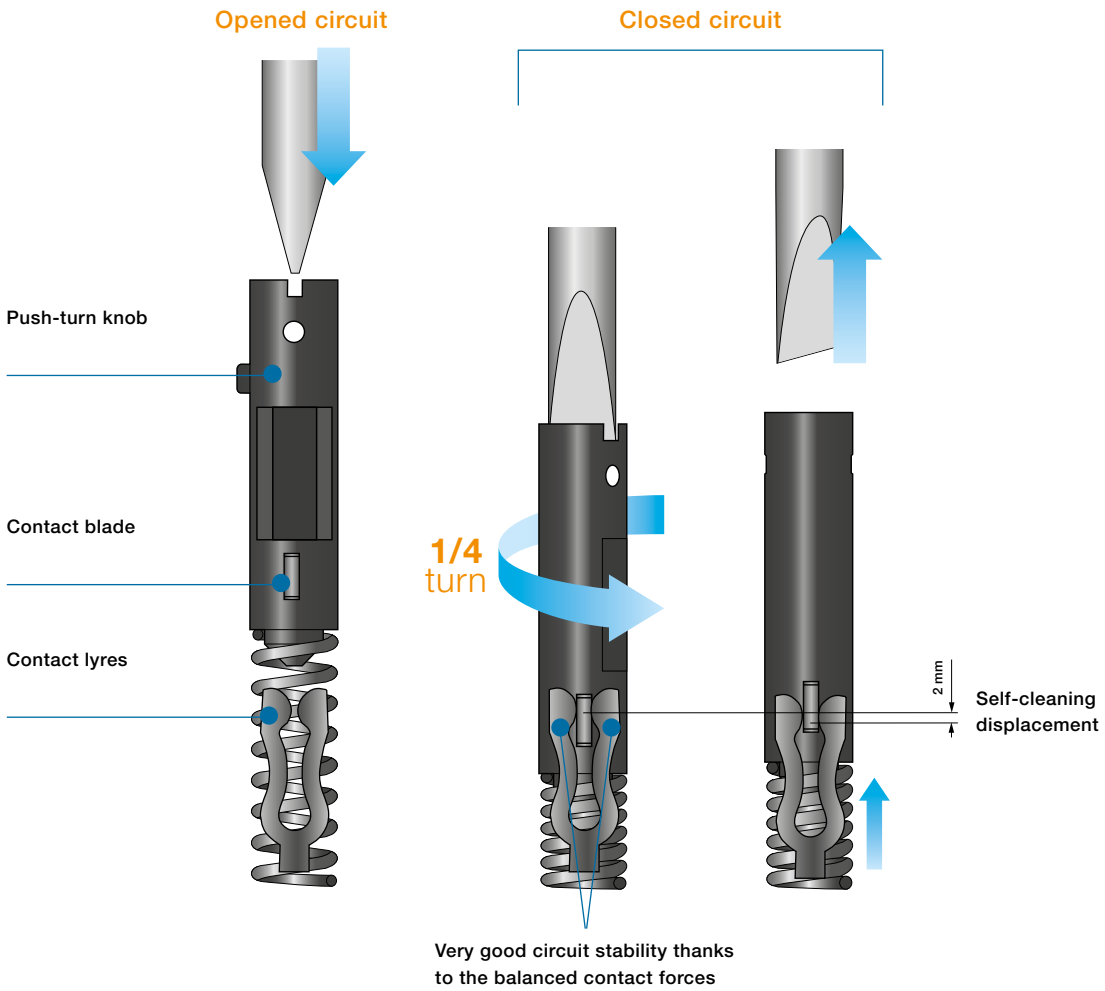

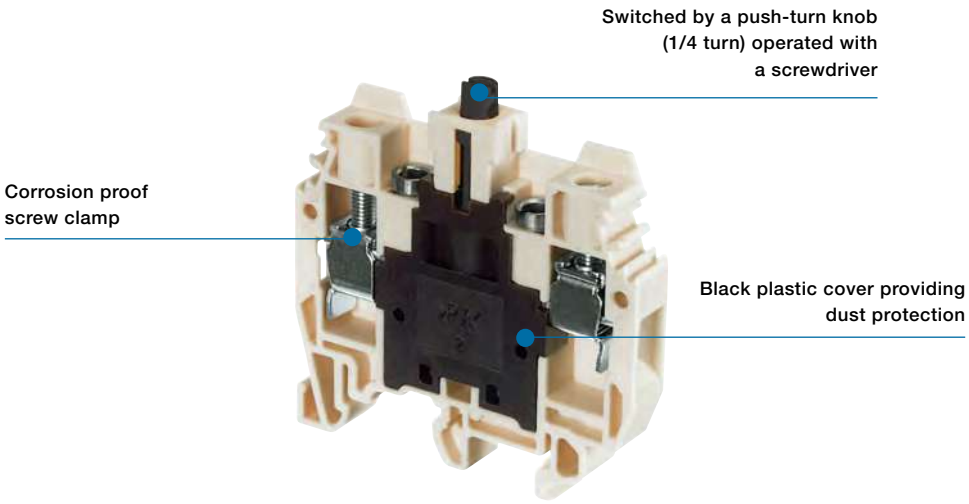

1SNC160250S0201

	Feed-through		
Section			
2.5 mm²	E4/6		
6 mm²		E6/8	
10 mm²			E10/16

	Disconnect with plug	Disconnect with push-turn knob	
Section		1/4	1/4
6 mm²		M6/8.STP	ES8-CG
10 mm²	E10/16.S		

Clamp - Channels for jumpering or testing - Test socket - Blown-fuse indicator

1SNC160251S0201

E4/6 railway terminal blocks

Feed-through - 6 mm 0.236 in spacing

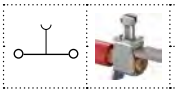

2.5 mm²

Description

- Ease you test operations with the builtt-in test socket - NF F 55-251 designation: ER 6,
- Sy SNCF 7 963 1088.

E4/6

Ordering details

Description		Color	Type	Part Numbers		Pkg qty	Weight (1 pce) g
Feed-through	With test socket DIA 2 mm 0.079 in	Beige	E4/6	1SNA190468R0000		50	8.00

Main technical data

Connecting capacity		NF C	DIN	NF F 55-251
1 conductor per clamp	Rigid: Solid/Stranded	0.5 ... 4 mm²		
	Flexible without ferrule	0.5 ... 2.5 mm²		
Rated voltage	V AC	500 V	750 V	500 V
	V DC	500 V	900 V	500 V
Rated current		30 A	26 A	30 A
Rated cross section		2.5 mm²	2.5 mm²	2.5 mm²

Mounting instructions

Rail		G32
Wire stripping length		9.5 mm 0.374 in
Tool		Flat screwdriver Ø 4 mm Ø 0.157 in
Torque		0.5 - 0.8 N.m 4.43 - 7.08 lb.in

CE RoHS EAC

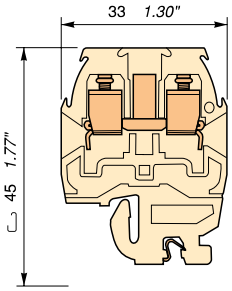

6 mm 0.236 in spacing

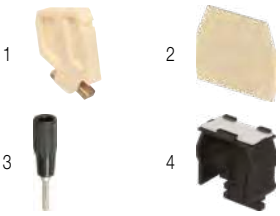

Accessories

	Description			Color	Type	Part Numbers		Pkg qty	Weight (1 pce) g
1	**End stops**	10 mm	0.394 in	Beige	BAR	1SNA164519R2400		50	11.00
2	**End sections**	1 mm	0.039 in	Beige	FEE6-1	1SNA193080R1200		25	1.30
3	**Test plugs**	DIA 2 mm 0.079 in		Black	FC2	1SNA007865R2600		100	2.00
4	**Terminal block markers**	Label holder		Black	PE	1SNA103007R2300		25	13.00
		Blank card		White	RC610	1SNA233000R0100		10	7.50

1SNC167047S0201

E6/8 railway terminal blocks

Feed-through - 8 mm 0.315 in spacing

6 mm²

Description

- Ease you test operations with the builtt-in test socket - NF F 55-251 designation: ER 8,
- Sy SNCF 7 963 1114.

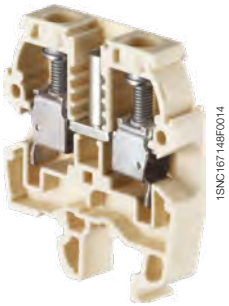

E6/8

Ordering details

Description		Color	Type	Part Numbers		Pkg qty	Weight (1 pce) g
Feed-through	With test socket DIA 4 mm 0.157 in	Beige	E6/8	1SNA190607R0400		50	15.00

Main technical data

Connecting capacity		NF C	DIN	NF F 55-251
1 conductor per clamp	Rigid: Solid/Stranded	0.5 ... 10 mm²		
	Flexible without ferrule	0.5 ... 6 mm²		
Rated voltage	V AC	500 V	750 V	500 V
	V DC	500 V	900 V	500 V
Rated current		51 A	46 A	51 A
Rated cross section		6 mm²	6 mm²	6 mm²

Mounting instructions

Rail	G32
Wire stripping length	13 mm 0.512 in
Tool	Flat screwdriver Ø 5 mm Ø 0.197 in
Torque	0.8 - 1 N.m 7.08 - 8.85 lb.in

CE RoHS EAC

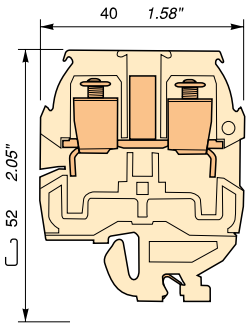

8 mm 0.315 in spacing

Accessories

	Description			Color	Type	Part Numbers		Pkg qty	Weight (1 pce) g
1	**End stops**	10 mm	0.394 in	Beige	BAR	1SNA164519R2400		50	11.00
2	**End sections**	1 mm	0.039 in	Beige	FEE8-2	1SNA193085R0300		25	2.00
3	**Lateral jumper bars**	2 poles	50 A (IEC)	Black	PC8-2	1SNA116538R1700		10	3.00
		10 poles	50 A (IEC)		PC8-10	1SNA163313R2400		10	14.00
4	**Test plugs**	DIA 4 mm 0.157 in		White	FC4	1SNA167860R0100		10	10.00
5	**Terminal block markers**	Label holder		Black	PE	1SNA103007R2300		25	13.00
		Blank card		White	RC810	1SNA234000R0200		10	8.20

1SNC167081S0201

E10/16 railway terminal blocks
Feed-through - 16 mm 0.63 in spacing

10 mm²

Description

- Ease you test operations with the builtt-in test socket - NF F 55-251 designation: ER 16,
- Sy SNCF 7 963 1110.

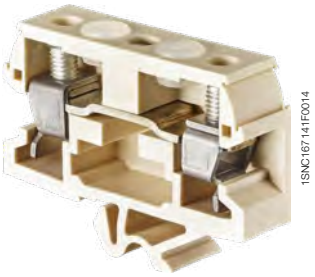

E10/16

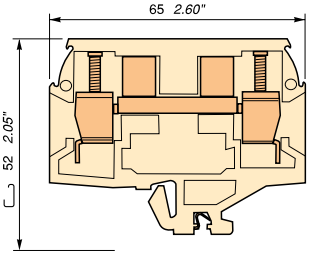

16 mm 0.63 in spacing

Ordering details

Description		Color	Type	Part Numbers		Pkg qty	Weight (1 pce) g
Feed-through	With test socket DIA 4 mm 0.157 in	Beige	E10/16	1SNA191302R2700		25	47.00

Main technical data

Connecting capacity		NF C	DIN	NF F 55-251
1 conductor per clamp	Rigid: Solid/Stranded	0.5 ... 16 mm²		
	Flexible without ferrule	0.5 ... 10 mm²		
Rated voltage	V AC	750 V	750 V	500 V
	V DC	500 V	900 V	500 V
Rated current		71 A	63 A	71 A
Rated cross section		10 mm²	10 mm²	10 mm²

Mounting instructions

Rail		G32
Wire stripping length		14 mm 0.551 in
Tool		Flat screwdriver Ø 5.5 mm Ø 0.217 in
Torque		2.5 - 3 N.m 22.1 - 26.6 lb.in

CE RoHS EAC

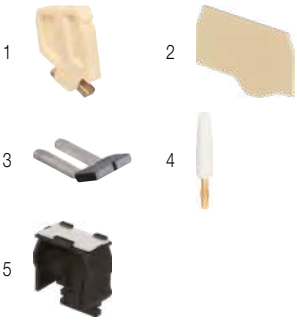

Accessories

	Description			Color	Type	Part Numbers		Pkg qty	Weight (1 pce) g
1	**End stops**	10 mm	0.394 in	Beige	BAR	1SNA164519R2400		50	11.00
2	**End sections**	1.5 mm	0.059 in	Beige	FEE10-16	1SNA193449R2400		10	
3	**Lateral jumper bars**	2 poles			PC	1SNA168497R2300		10	7.00
4	**Test plugs**	DIA 4 mm 0.157 in		White	FC4	1SNA167860R0100		10	10.00
5	**Terminal block markers**	Label holder		Black	PE	1SNA103007R2300		25	13.00
		Blank card		White	RC1010	1SNA238000R1600		10	1.30

1SNC167053S0201

M6/8.STP railway terminal blocks

Disconnect with push-turn knob - 8 mm 0.315 in spacing

6 mm²

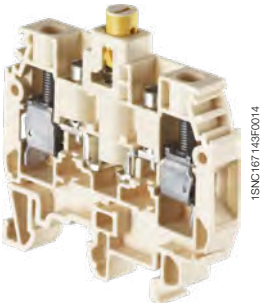

M6/8.STP

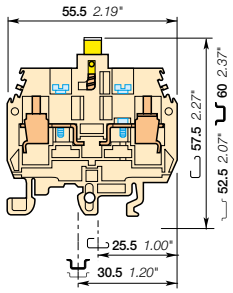

8 mm 0.315 in spacing

Description

- Ease your disconnect operations with the disconnect 1/4 turn push-turn knob,
- Possibility to seal in the open position,
- Ease your test operations with the built-in test socket,
- NF F 55-251 designation: ES 8,
- Sy SNCF 7 963 1156.

Ordering details

Description		Color	Type	Part Numbers		Pkg qty	Weight (1 pce) g
Disconnect	With 2 tests sockets DIA 4 mm 0.157 in	Beige	M6/8.STP	1SNA195212R1000		25	21.00

Main technical data

Connecting capacity		NF C	DIN	NF F 55-251
1 conductor per clamp	Rigid: Solid/Stranded	0.5 … 10 mm²		
	Flexible without ferrule	0.5 … 6 mm²		
Rated voltage	V AC	500 V	500 V	500 V
	V DC	500 V	500 V	500 V
Rated current		17 A	15 A	12 A
Rated cross section		6 mm²	6 mm²	6 mm²

Mounting instructions

Rail	G32, TH 35-7.5, TH 35-15
Wire stripping length	11 mm 0.433 in
Tool	Flat screwdriver Ø 4 mm Ø 0.157 in
Torque	0.8 - 1 N.m 7.08 - 8.85 lb.in

CE RoHS EAC

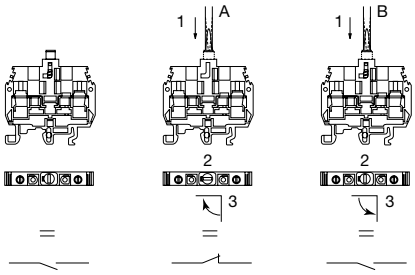

A: Closing operation
B: Opening operation
1: Push
2: Turn
3: stop

Accessories

	Description			Color	Type	Part Numbers		Pkg qty	Weight (1 pce) g
1	**End stops**	10 mm	0.394 in	Beige	BAM2	1SNA296351R0000		50	12.00
					BAR	1SNA164519R2400		50	11.00
2	**End sections**	2.8 mm	0.110 in	Beige	FEMT1	1SNA193137R0300		50	2.00
3	**Lateral jumper bars**	1 poles	24 A (IEC)	Grey	AD2.5	1SNA114205R2000		50	1.60
		2 poles	50 A (IEC)	Black	PC8-2	1SNA116538R1700		10	3.00
		10 poles	50 A (IEC)		PC8-10	1SNA163313R2400		10	14.00
4	**Test plugs**	DIA 4 mm 0.157 in		White	FC4	1SNA167860R0100		10	10.00
5	**Short circuit plugs**	With test socket DIA 4 mm 0.157 in		Beige	BNSTP1	1SNA196792R1700		20	14.00
6	**Terminal block markers**	Blank card		White	RC810	1SNA234000R0200		10	8.20

1SNC167026S0201

ES8-CG railway terminal blocks

Disconnect with push-turn knob - 8 mm 0.315 in spacing

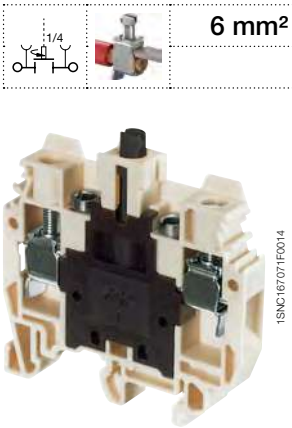

ES8-CG

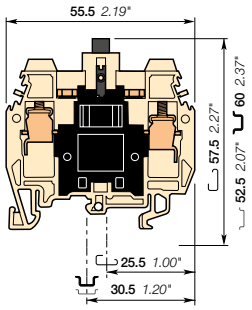

8 mm 0.315 in spacing

Description

- Particularly recommanded for corrosive atmosphere: Self-cleaning displacement system and dust protection with plastic cover,
- Ease and safe your disconnect operations with the disconnect 1/4 turn push-turn knob,
- Possibility to seal in the open position,
- Ease your test operations with the built-in test socket.

Ordering details

Description		Color	Type	Part Numbers		Pkg qty	Weight (1 pce) g
Disconnect	With 2 tests sockets DIA 4 mm 0.157 in	Beige	ES8-CG	1SNA400015R2000		25	21.00
		Green	ES8-CG	1SNA400014R2700		25	21.00

Main technical data

Connecting capacity		According to CT 448 of the IG PS 52
1 conductor per clamp	Rigid: Solid/Stranded	0.5 ... 10 mm²
	Flexible without ferrule	0.5 ... 6 mm²
Rated voltage	V AC	500 V
	V DC	500 V
Rated current		2 A
Rated cross section		6 mm²

Mounting instructions

Rail	G32, TH 35-7.5, TH 35-15
Wire stripping length	11 mm 0.433 in
Tool	Flat screwdriver Ø 4 mm Ø 0.157 in
Torque	0.8 - 1 N.m 7.08 - 8.85 lb.in

CE RoHS EAC

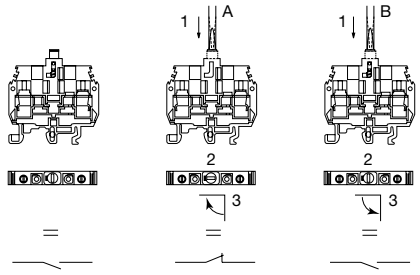

A: Closing operation
B: Opening operation
1: Push
2: Turn
3: stop

Accessories

	Description				Color	Type	Part Numbers		Pkg qty	Weight (1 pce) g
1	**End stops**	10 mm	0.394 in		Beige	BAM2	1SNA296351R0000		50	12.00
						BAR	1SNA164519R2400		50	11.00
2	**End sections**	2.8 mm	0.110 in		Beige	FEMT1	1SNA193137R0300		50	2.00
3	**Lateral jumper bars**	1 poles	24 A (IEC)		Grey	AD2.5	1SNA114205R2000		50	1.60
		2 poles	50 A (IEC)		Black	PC8-2	1SNA116538R1700		10	3.00
		10 poles	50 A (IEC)			PC8-10	1SNA163313R2400		10	14.00
4	**Test plugs**	DIA 4 mm 0.157 in			White	FC4	1SNA167860R0100		10	10.00
5	**Short circuit plugs**	With test socket DIA 4 mm 0.157 in			Beige	BNSTP1	1SNA196792R1700		20	14.00
6	**Terminal block markers**	Blank card			White	RC810	1SNC234000R0200		10	8.20

1SNC167030S0201

E10/16.S railway terminal blocks

Disconnect with plug - 16 mm 0.63 in spacing

10 mm²

Description

- NF F 55-251 designation: ES 16,
- Sy SNCF 7 963 1109

E10/16.S

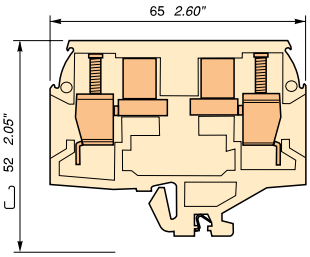

16 mm 0.63 in spacing

Ordering details

Description	Color	Type	Part Numbers		Pkg qty	Weight (1 pce) g
Disconnect	Beige	E10/16.S	1SNA191296R1100		25	47.00

Main technical data

Connecting capacity		NF C	DIN	NF F 55-251
1 conductor per clamp	Rigid: Solid/Stranded	0.5 ... 16 mm²		
	Flexible without ferrule	0.5 ... 10 mm²		
Rated voltage	V AC	500 V	380 V	500 V
	V DC	500 V	440 V	500 V
Rated current				30 A
Rated cross section		10 mm²	10 mm²	10 mm²

Mounting instructions

Rail		G32
Wire stripping length		14 mm 0.551 in
Tool		Flat screwdriver Ø 5.5 mm Ø 0.217 in
Torque		2.5 - 3 N.m 22.1 - 26.6 lb.in

CE RoHS EAC

Accessories

	Description			Color	Type	Part Numbers		Pkg qty	Weight (1 pce) g
1	**End stops**	10 mm	0.394 in	Beige	BAR	1SNA164519R2400		50	11.00
2	**End sections**	1.5 mm	0.059 in	Beige	FEE10-16	1SNA193449R2400		10	
3	**Lateral jumper bars**	2 poles			PC	1SNA168497R2300		10	7.00
5	**Guide plugs**			Beige	BIE	1SNA196915R0200		25	36.00
4	**Component plugs**			Black	SSB20	1SNA103098R2600		20	15.00
		With test			SSB20T	1SNA103099R2700		20	17.00
6	**Short circuit plugs**	With test socket DIA 4 mm 0.157 in		Beige	BNSTP1	1SNA196792R1700		20	14.00
7	**Terminal block markers**	Label holder		Black	PE	1SNA103007R2300		25	13.00
		Blank card		White	RC1010	1SNA238000R1600		10	1.30

Railway applications, terminal blocks
Screw clamp technology

Technologies presentation			220
Overview			224

Feed-through

4 mm² / 12 AWG	**ZS4**		228
6 mm² / 10 AWG	**ZS6**		229
	ZS6-3S and **ZS6-4S**	with 3 and 4 connections	230-231
10 mm² / 6 AWG	**ZS10**		232
16 mm² / 4 AWG	**ZS16**		233
25 mm² / 3 AWG	**ZS25**		234
35 mm² / 0 AWG	**ZS35**		235
50 mm² / 0 AWG	**ZS50**		236
70 mm² / 00 AWG	**ZS70**		237
95 mm² / 0000 AWG	**ZS95**		238
150 mm² / 350 Kcmil	**ZS150**		239
240 mm² / 240 Kcmil	**ZS240**		240

Ground

4 mm² / 12 AWG	**ZS4-PE**		241
6 mm² / 10 AWG	**ZS6-PE**		242
	ZS6-3S-PE and **ZS6-4S-PE**	with 3 and 4 connections	243-244
10 mm² / 6 AWG	**ZS10-PE**		245
16 mm² / 4 AWG	**ZS16-PE**		246
25 mm² / 3 AWG	**ZS25-PE**		247
35 mm² / 2 AWG	**ZS35-PE**		248
35 mm²	**ZS35-PEN**	+ neutral	249
50 mm² / 0 AWG	**ZS50-PE**		250
70 mm² / 00 AWG	**ZS70-PE**		251
95 mm² / 0000 AWG	**ZS95-PE**		252

Disconnect with blade

4 mm² / 10 AWG	**ZS4-S**, **ZS4-S-T**, **ZS4-S-R1** and **ZS4-S-T-R1**	with test	253-256
6 mm² / 10 AWG	**ZS6-S** and **ZS6-S-4S-T**	with test	257-258
10 mm² / 6 AWG	**ZS10-S**		259

Disconnect with plug

4 mm² / 10 AWG	**ZS4-SP**, **ZS4-SP-T2**, **ZS4-SP-R1** and **ZS4-SP-T2-R1**	with test	260-263
10 mm² / 6 AWG	**ZS10-SP**		264

Fuse and marshalling cabinets application overview			266

For 5x20 and 5x25 mm fuses

4 mm² / 10 AWG	**ZS4-SF1** and **ZS4-SF1-T**	with test	268-269
	ZS4-SF1-R	with fuse indicator and test	270-271
	ZS4-R1	feed-through	272
	ZS4-S-R3	disconnect with lever	273

For 5x20 mm fuses and marshalling cabinets application

4 mm² / 10 AWG	**ZS4-SF**		274
	ZS4-SF-T	with test	275
	ZS4-SF-R	with fuse indicator and test	276-277
	ZS4-R2	feed-through	278
	ZS4-PE-R2	ground	279
	ZS4-S-R2	disconnect with lever	280

For 6.3x32 mm fuses (¼ x 1¼ in)

10 mm² / 6 AWG	**ZS10-SF**		281
	ZS10-SF-R	with fuse indicator	282
	ZS10-S-R2	disconnect with lever	283

Double deck

4 mm² / 12 AWG	**ZS4-D2** and **ZS4-D1**	2 and 1 feed-through circuits	284-285
6 mm² / 10 AWG	**ZS6-D2** and **ZS6-D1**	2 and 1 feed-through circuits	286-287
	ZS6-D2-PE	1 feed-through circuit and 1 ground circuit	288
	ZS6-D1-PE	1 ground circuit	289
4 mm² / 10 AWG	**ZS4-D2-S**	1 disconnect circuit and 1 feed-through circuit	290
	ZS4-D2-S-T	1 disconnect circuit + test and 1 feed-through circuit	291
	ZS4-D2-SF1	1 fuse circuit and 1 feed-through circuit	292
	ZS4-D2-SF1-R	1 fuse circuit + fuse indicator and 1 feed-through circuit	293

Triple deck

4 mm² / 12 AWG	**ZS4-T3**	3 feed-through circuits	294
4 mm² / 10 AWG	**ZS4-T3-R1**	3 feed-through circuits	295

Component holder

4 mm² / 12 AWG	**ZS4-D-CH-UD** and **ZS4-D-CH-DU**		296-297

Test and measurement

Overview			298
10 mm² / 6 AWG	**ZS10-ST**		302
	ZS10-ST-1	for Potential Transformer circuits	303
	ZS10-ST-T4	for Current Transformer circuits	304
	ZS10-R1	feed-through	305
	ZS10-PE-R1	ground	306

TE Connectivity screw clamp technology benefits from 60 years of experience.

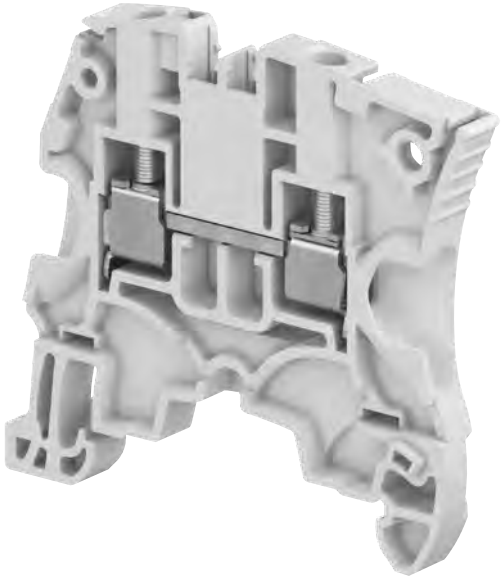

Speed up your projects

An optimized conductor guiding

Smooth connection process up to 2 conductors with or without ferrules thanks to funnel entry shape.
Also perfectly adapted to double ferrule shape 1
Security: flap avoiding the insertion of cable underneath the clamp 2.

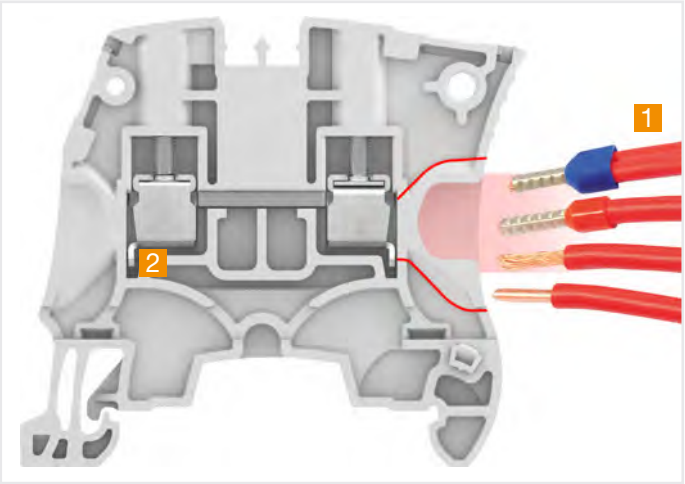

Engineered conductor entry

Better project identification

- Circuit identification is improved thanks to the 20% larger marking area
- Pre-mark by hand or with label on our flat marking surface and start immediately the wiring, before the final markers mounting
- Spare markers re-printing in case of modifications.

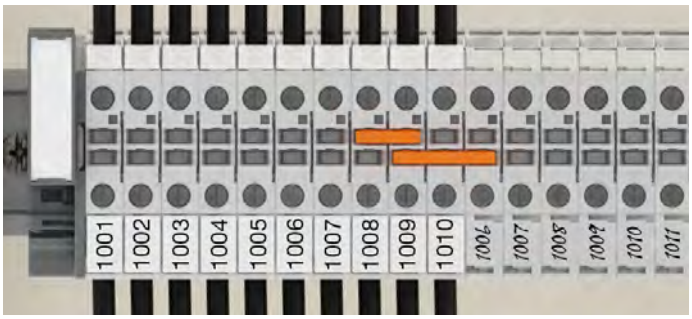

Clear circuit identification

1SNK161092S0201

Easy to install

Smart design facilitating assembly process.
Mounting, wiring, testing… made easy.

Avoid mounting and wiring errors: asymmetrical design allows immediate visual check in case of reversed terminal blocks.

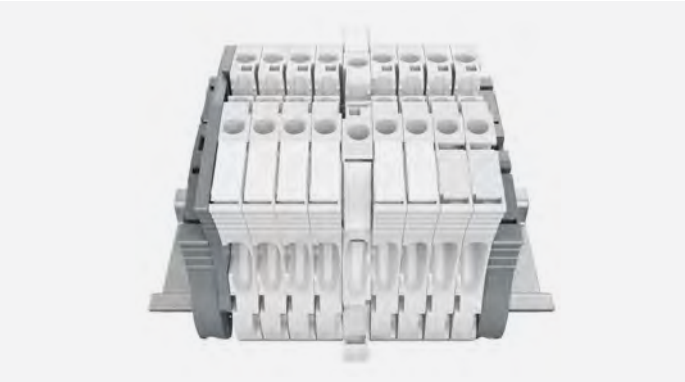

Asymmetrical design avoids mounting error

Minimize retightening campaigns
High torque resistance : the clamp is punched to increase the number of threads in contact by 30 % 1.
The TE Connectivity exclusive anti-release system creates a controlled locking-screw effect reinforced by the 2 overlapping tabs that maintain the clamp parts 2.

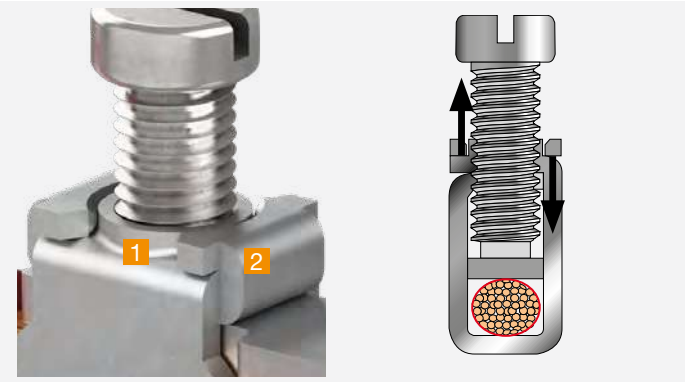

High torque resistance

Anti-release system

Faster accessories mounting
Save up to 70% mounting time thanks to screwless accessories: jumpers, component plugs, test devices, end stops and snap-in ground terminal blocks.

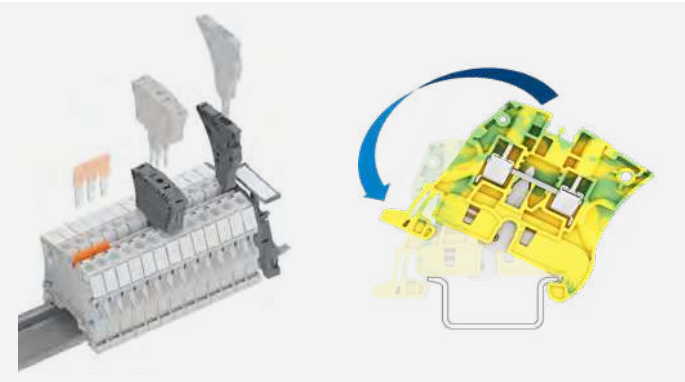

Screwless accessories

Snap-in ground terminal block for rapid installation

1SNK161092S0201

Easy to install

Smart design facilitating assembly process.
Mounting, wiring, testing… made easy.

Locking pin 1 allows quick and easy lock up to ten blocks in position at a time.

Closed jumper location allows great stiffness of the terminal block, optimal jumper guiding and avoids deflections while tightening.

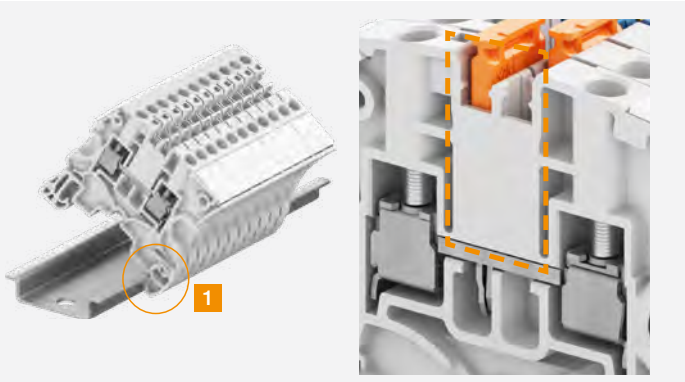

Lock up to ten blocks in position at a time

Closed jumper location for stiffness

Smart accessories
Flexible test solutions from individual insulated test adapter to test connectors for complete assemblies testing.
- Direct plug-in into jumpers channels
- 5, 6, 8 mm spacing, mixing various spacing is possible
- 1000 V rating.

Component holder plugs for series or parallel component mounting (resistors, filters, diodes..).
Can be installed after wiring.
Series plug offers screwless component connection (no soldering).

Plug-in individual test adapter

Plug-in test connector

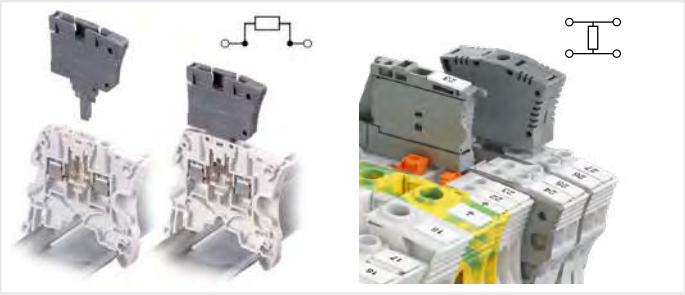

Series plug associated with disconnect blocks

Parallel plug to be installed between 2 blocks

Smart plug-in jumpers:
Pre-cut poles removable by hand: clean cut.
Insulated up to 1000 V (avoid use of separators).
Predefined shapes in molding to easily identify connected poles with a pen.

Pre-cut poles easy removable by hand

Predefined shape to identify connected poles

1SNK161092S0201

Optimized logistics

Reduce your accessories inventory by up to 50%

SNK PI-Spring, screw and pluggable ranges share the same accessories.
Reduced packaging adapted to the usage
(20 items packaging for some references).

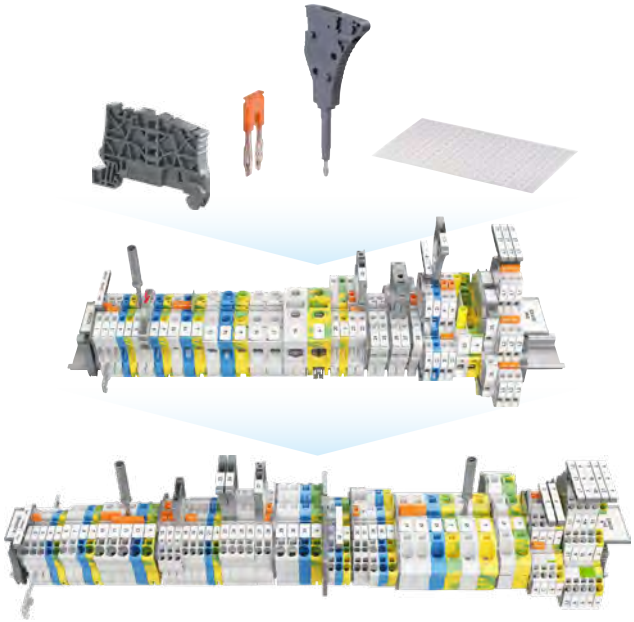

Shared accessories for SNK PI-Spring, screw and pluggable ranges

All end sections and circuit separators fit several types and sizes of blocks.

Stock only one end section for managing your assembly up to 240 mm²

Facilitate maintenance operations

Terminals can be individually removed from a terminal assembly equipped with markers:
TE Connectivity markers become independent after strip mounting, TE Connectivity markers remain on terminal in any situation.

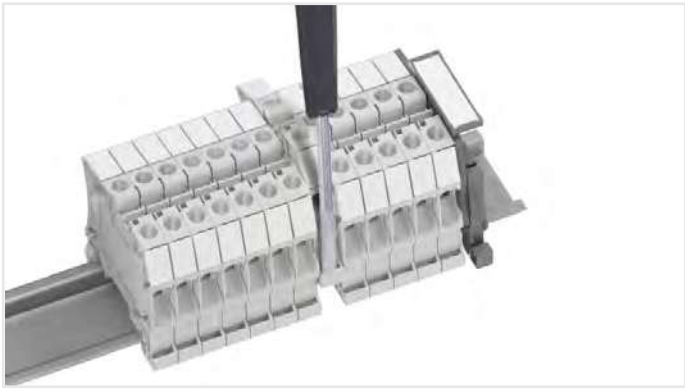

Maintenance operations facilitated

Reliable in harsh conditions

Qualified for worldwide markets, applications and for severe environments: vibration, shock, corrosion…

1SNK161092S0201

2 Connections

Single deck
Feed-through
Ground
Disconnect
Fuse

3 Connections

Single deck
Feed-through
Ground

4 Connections

Single deck
Feed-through
Ground
Disconnect

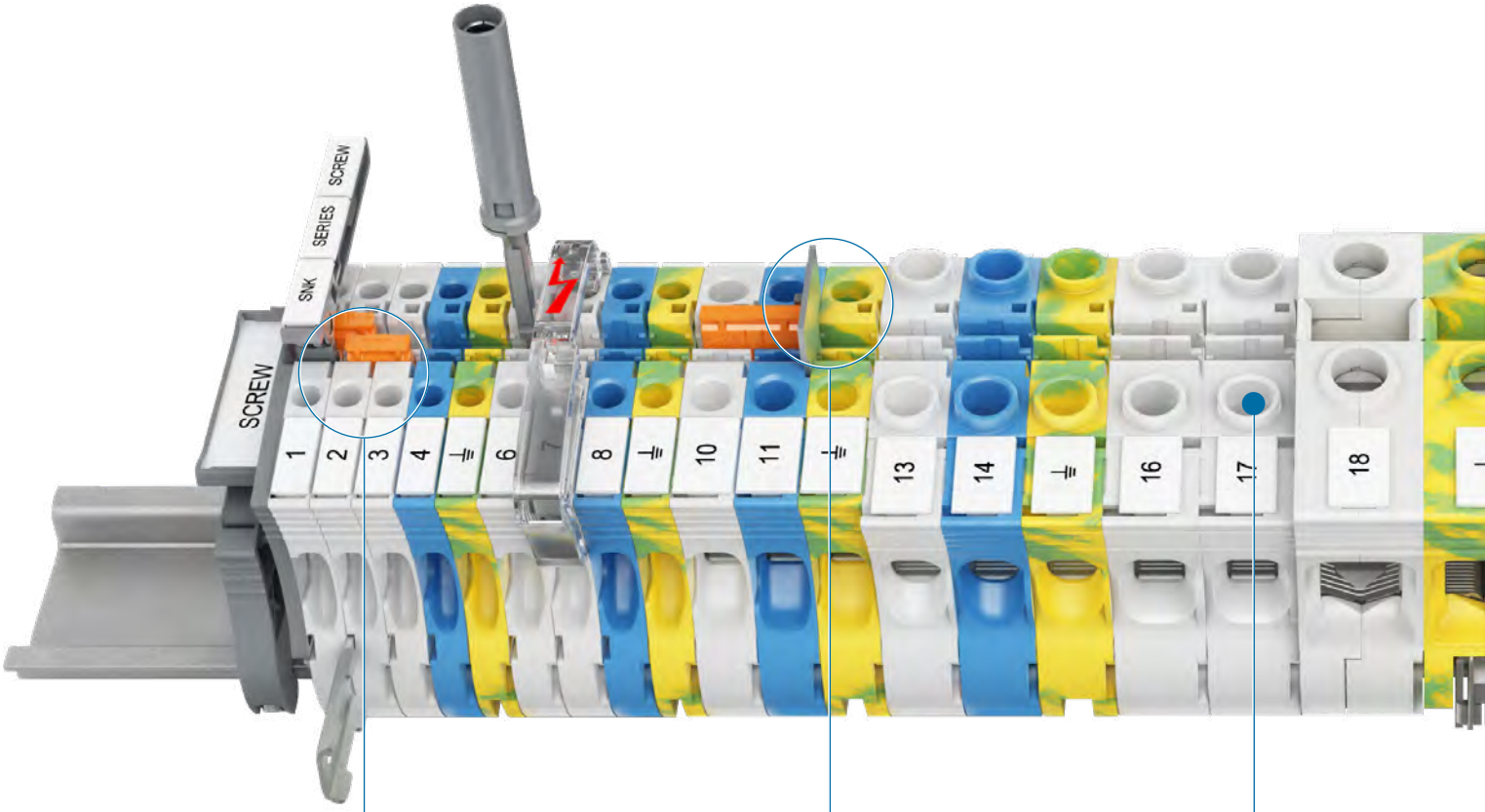

Double central channels
allows multiconfigurations (jumpering, testing and measuring)

Circuit separator
without spacing loss

Voltage test
screwdriver entry point accepts Category II probes

2x2 Connections

Double deck
Feed-through
Ground
Disconnect
Fuse
Component holder

2 Connections

Test and measurement
Feed-through
Ground
Disconnect

3x2 Connections

Triple deck
Feed-through

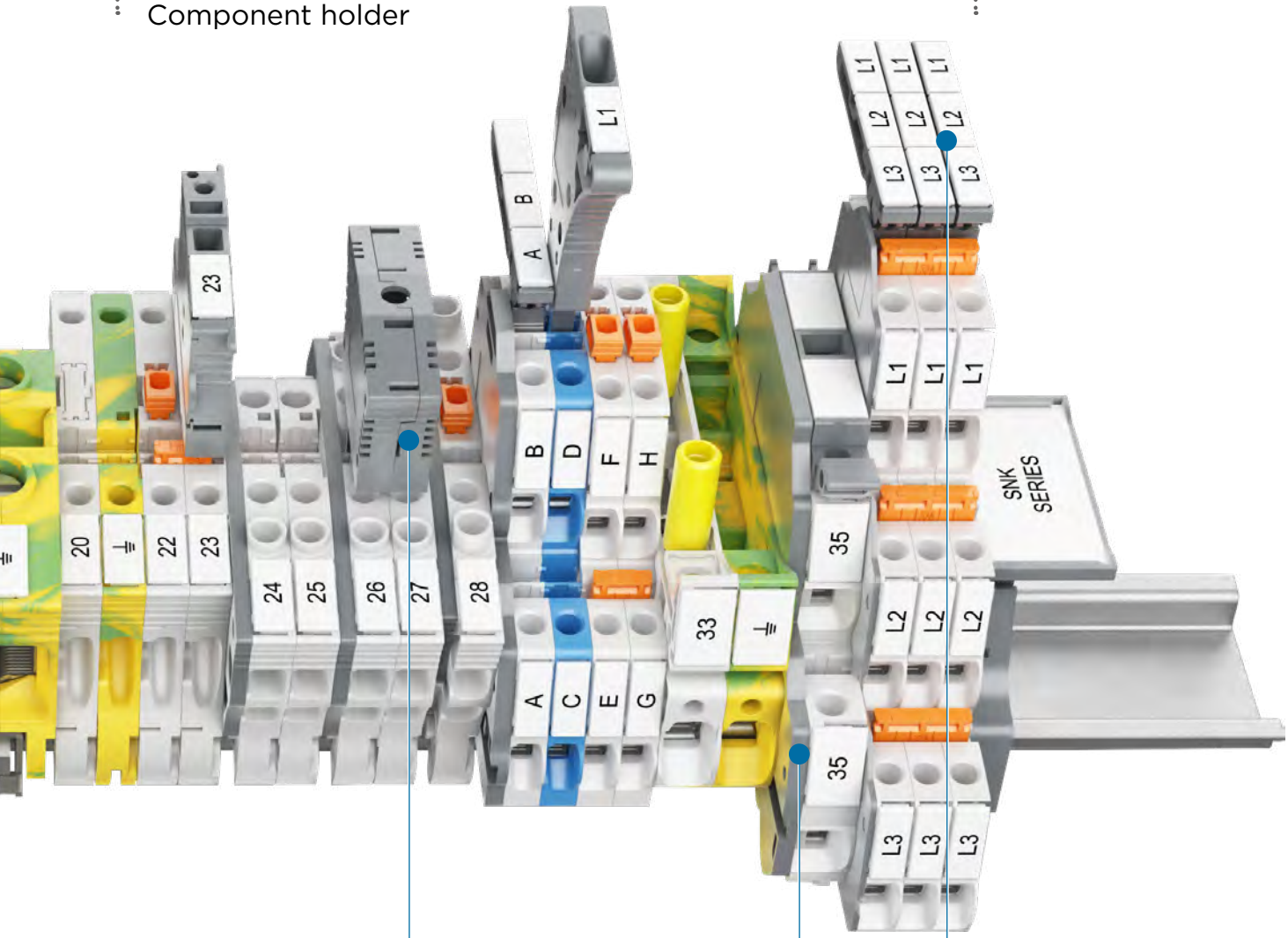

Plug
component holder

End section
can be used
as circuit separator

Rotating label holder
easy plug-in in
jumper channel

1SNK161089S0201

SNK series, terminal blocks
Screw clamp technology

Section		Feed-through					Ground			
4 mm²	12 AWG	ZS4					ZS4-PE			
	10 AWG									
6 mm²	10 AWG	ZS6	ZS6-3S	ZS6-4S			ZS6-PE	ZS6-3S-PE	ZS6-4S-PE	
10 mm²	6 AWG	ZS10					ZS10-PE			
16 mm²	4 AWG	ZS16					ZS16-PE			
25 mm²	3 AWG	ZS25					ZS25-PE			
35 mm²	0 AWG				ZS35					
	2 AWG									ZS35-PE
50 mm²	0 AWG				ZS50					ZS50-PE
70 mm²	00 AWG				ZS70					ZS70-PE
95 mm²	0000 AWG				ZS95					ZS95-PE
150 mm²	350 Kcmil					ZS150				
240 mm²	500 Kcmil					ZS240				

Section		Disconnect with blade					Disconnect with plug			
4 mm²	10 AWG	ZS4-S	ZS4-S-T2		ZS4-S-R1	ZS4-S-T2-R1	ZS4-SP	ZS4-SP-T2	ZS4-SP-R1	ZS4-SP-T2-R1
						ZS4-S-T2.3-R1				
6 mm²	10 AWG	ZS6-S		ZS6-S-4S-T2						
10 mm²	6 AWG	ZS10-S					ZS10-SP			

Section		For 5 x 20 mm fuses				Aligned for marshalling cabinets application			For 6.3 x 32 mm fuses (¼ x 1¼ in)		Aligned
4 mm²	10 AWG	ZS4-SF	ZS4-SF-T2	ZS4-SF-R1	ZS4-SF-R2	ZS4-R2	ZS4-PE-R2	ZS4-S-R2			
				ZS4-SF-R3	ZS4-SF-R4						
10 mm²	6 AWG								ZS10-SF	ZS10-SF-R1	ZS10-S-R2
										ZS10-SF-R3	

Clamp - Channels for jumpering or testing - Test socket - Blown-fuse indicator

1SNK161066S0201

Double deck										Triple deck
Feed-through		Ground		Disconnect with blade		For 5 x 20 mm and 5 x 25 mm fuses		Component holder		Feed-through
ZS4-D2	ZS4-D1							ZS4-D-CH-UD	ZS4-D-CH-DU	ZS4-T3
				ZS4-D2-S	ZS4-D2-S-T2	ZS4-D2-SF1	ZS4-D2-SF1-R1			ZS4-T3-R1
							ZS4-D2-SF-R3			
ZS6-D2	ZS6-D1	ZS6-D2-PE	ZS6-D1-PE							

Test & measurement			
Test disconnect with sliding link		Aligned with ZS10-ST	
ZS10-ST	ZS10-ST-T4	ZS10-R1	ZS10-PE-R1
	ZS10-ST-1		

For 5 x 20 mm and 5 x 25 mm fuses				Feed-through aligned with ZS4-SF1	
ZS4-SF1	ZS4-SF1-T2	ZS4-SF1-R1	ZS4-SF1-R2	ZS4-R1	ZS4-S-R3
		ZS4-SF1-R3	ZS4-SF1-R4		

8

1SNK161066S0201

ZS4 screw clamp terminal blocks

Feed-through - 5.2 mm 0.205 in spacing

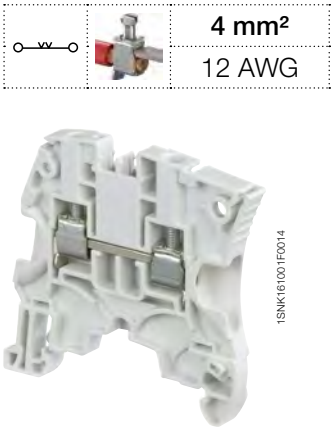

4 mm²	
12 AWG	

1SNK161001F0014

ZS4

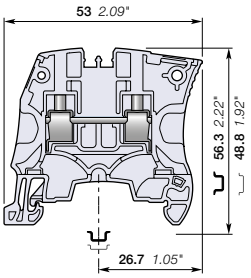

5.2 mm 0.205 in spacing

Description

- Save space by connecting conductors up to 4 mm² (without insulated ferrule, CB certified) 12 AWG in just 5.2 mm 0.205 in spacing,
- Perfectly adapted to solar applications: voltage is rated 1000 V AC / DC IEC.

Ordering details

Description	Color	Type	Part Number		Pkg qty	Weight (1 pce) g
Feed-through	Grey	ZS4	1SNK505010R0000		50	8.80
	Blue	ZS4-BL	1SNK505020R0000		50	8.80
	Orange	ZS4-OR	1SNK505030R0000		50	8.80
	Yellow	ZS4-YL	1SNK505060R0000		50	8.80
	Green	ZS4-GN	1SNK505061R0000		50	8.80
	Red	ZS4-RD	1SNK505062R0000		50	8.80
	Purple	ZS4-PR	1SNK505063R0000		50	8.80
	Brown	ZS4-BR	1SNK505064R0000		50	8.80
	White	ZS4-WH	1SNK505065R0000		50	8.80
	Black	ZS4-BK	1SNK505066R0000		50	8.80

Main technical data

Connecting capacity		IEC	UL - CSA
1 conductor per clamp	Rigid: Solid/Stranded	0.2 ... 4 mm²	24 ... 12 AWG
	Flexible without ferrule	0.22 ... 4 mm²	
	Flexible with non insulated ferrule	0.22 ... 4 mm²	24 ... 12 AWG
	Flexible with insulated ferrule	0.22 ... 2.5 mm²	24 ... 14 AWG
	Gauge	A3-B3	
2 conductors per clamp	Rigid: Solid/Stranded	0.2 ... 1.5 mm²	24 ... 16 AWG
	Flexible without ferrule	0.2 ... 1.5 mm²	
	Flexible with twin ferrule	0.22 ... 1.5 mm²	24 ... 16 AWG
Rated current / Rated cross section		32 A / 4 mm²	20 A / 12 AWG
Rated short-time withstand current (1s)		480 A	
Short Circuit Current Rating (with specific conditions)			100 kA
Rated voltage		1000 V	600 V
Impulse withstand voltage		8000 V	
Protection		IP20	NEMA 1
Increased safety Ex e		693 V 32 A IEC/EN 60079-7 - IM2 II 2 GD Ex eb I/II/IIIC – 600 V 20 A UL 60079-7 - Class I, Zone 1, AEx e II, Ex e II U	

Mounting instructions

Rail	TH 35-7.5, TH 35-15
Wire stripping length	10.5 mm 0.412 in
Tool	Flat screwdriver Ø 3.5 mm Ø 0.138 in
Torque	0.6 Nm ± 0.1 5.31 lb.in ± 0.885

The connecting capacity data for one Rigid: Solid/Stranded, or one Flexible conductor (when applicable) is a mandatory information required by IEC, UL and CSA standards (Copper conductors). All other data are provided as supplementary information only. For more details, please consult our CB, UL or CSA certificates and technical datasheet available on http://www.TE.com

CE, CB, RoHS, USR CNR, CSA, EAC Ex, ATEX, IECEx, BR-Ex e II, Haz Loc, BV, DNV, Rina

Accessories

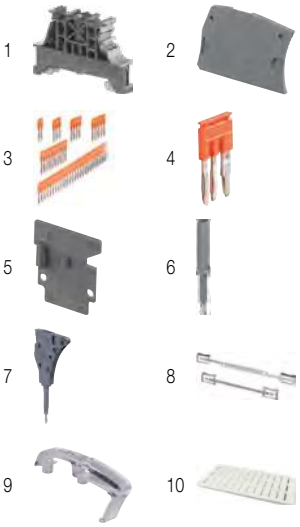

	Description			Color	Type	Part Number		Pkg qty	Weight (1 pce) g
1	End stops	10 mm	0.394 in	Dark grey	BAM4	1SNK900001R0000		50	14.00
2	End sections	2.2 mm	0.087 in	Dark grey	ES4	1SNK505910R0000		20	2.20
3	Jumper bars	2 poles	32 A (IEC)	Orange	JB5-2	1SNK905302R0000		50	1.30
		3 poles	32 A (IEC)		JB5-3	1SNK905303R0000		50	2.00
		4 poles	32 A (IEC)		JB5-4	1SNK905304R0000		50	2.70
		5 poles	32 A (IEC)		JB5-5	1SNK905305R0000		50	3.50
		10 poles	32 A (IEC)		JB5-10	1SNK905310R0000		30	7.10
		50 poles	32 A (IEC)		JB5-50	1SNK905350R0000		10	36.00
4	Cross spacing jumpers	3 poles	32 A (IEC)	Orange	JB85-3	1SNK900603R0000		10	2.80
5	Circuit separators	0 mm	0 in	Dark grey	CS	1SNK900101R0000		20	0.20
		3 mm	0.118 in		CS-R1	1SNK900103R0000		20	5.20
6	Test adapters	For test plugs DIA 2 mm 0.079 in		Dark grey	TP2	1SNK900203R0000		20	1.70
		For test plugs DIA 4 mm 0.157 in			TP4	1SNK900205R0000		20	2.40
7	Test connectors	5.2 mm 0.205 in spacing		Dark grey	TC5	1SNK900200R0000		10	5.20
		End module, 5.2 mm 0.205 in			TC5-R1	1SNK900201R0000		10	5.20
8	Shield connectors				SHBS	1SNK900600R0000		20	3.50
9	Protecting covers	5.2 mm 0.205 in spacing		Transparent	PL5	1SNK900618R0000		10	1.50
10	Terminal block markers	Blank marker		White	MG-CPM 13 41790	1SNB041790R0512		1960	0.23
		Blank card			MC512	1SNK140000R0000		22	9.00
					MC512PA	1SNK149999R0000		20	10.00
		Universal wire markers holder		Grey	UMH	1SNK900611R0000		10	0.20

Complete list of accessories is indicated in the terminal block datasheet including end stops.
Some accessories such as jumper bars may modify the terminal block's ratings: Complete information available in the accessories section of the catalog.

Ground screw clamp terminal blocks

Description		Color	Type	Part Number		Pkg qty	Weight (1 pce) g
Ground	Profile aligned with ZS4	Green-yellow	ZS4-PE	1SNK505150R0000		20	12.10

1SNK161001S0201

Technical data valid for copper conductors only.

ZS6 screw clamp terminal blocks
Feed-through - 6 mm 0.236 in spacing

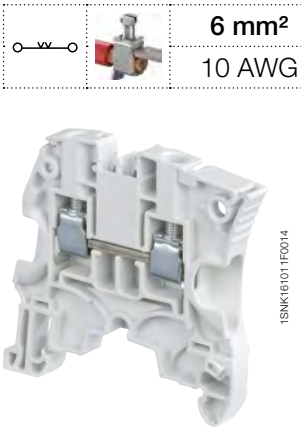

ZS6

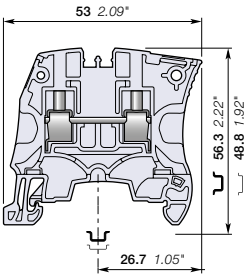

6 mm 0.236 in spacing

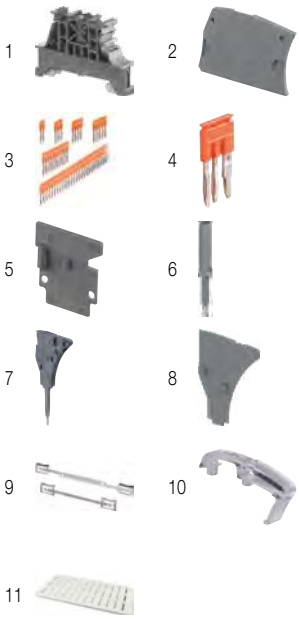

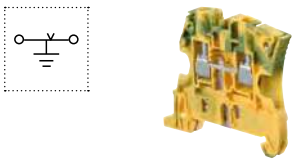

6 mm²	
10 AWG	

Description

Save space by connecting conductors up to 6 mm² (without insulated ferrule, CB certified) 10 AWG in just 6 mm 0.236 in spacing,

– Perfectly adapted to solar applications: voltage is rated 1000 V AC / DC IEC.

Ordering details

Description	Color	Type	Part Number		Pkg qty	Weight (1 pce) g
Feed-through	Grey	ZS6	1SNK506010R0000		50	10.60
	Blue	ZS6-BL	1SNK506020R0000		50	10.60
	Orange	ZS6-OR	1SNK506030R0000		50	10.60
	Yellow	ZS6-YL	1SNK506060R0000		50	10.60
	Green	ZS6-GN	1SNK506061R0000		50	10.60
	Red	ZS6-RD	1SNK506062R0000		50	10.60
	Purple	ZS6-PR	1SNK506063R0000		50	10.60
	Brown	ZS6-BR	1SNK506064R0000		50	10.60
	White	ZS6-WH	1SNK506065R0000		50	10.60
	Black	ZS6-BK	1SNK506066R0000		50	10.60

Main technical data

Connecting capacity		IEC	UL - CSA
1 conductor per clamp	Rigid: Solid/Stranded	0.2 ... 6 mm²	24 ... 10 AWG
	Flexible without ferrule	0.2 ... 6 mm²	
	Flexible with non insulated ferrule	0.22 ... 4 mm²	24 ... 12 AWG
	Flexible with insulated ferrule	0.22 ... 4 mm²	24 ... 12 AWG
	Gauge	A4-B3	
2 conductors per clamp	Rigid: Solid/Stranded	0.2 ... 2.5 mm²	24 ... 14 AWG
	Flexible without ferrule	0.2 ... 2.5 mm²	
	Flexible with twin ferrule	0.22 ... 2.5 mm²	24 ... 14 AWG
Rated current / Rated cross section		41 A / 6 mm²	30 A / 10 AWG
Rated short-time withstand current (1s)		720 A	
Short Circuit Current Rating (with specific conditions)			100 kA
Rated voltage		1000 V	600 V
Impulse withstand voltage		8000 V	
Protection		IP20	NEMA 1
Increased safety Ex e		693 V 41 A IEC/EN 60079-7 - IM2 II 2 GD Ex eb I/II/IIIC – 600 V 30 A UL 60079-7 - Class I, Zone 1, AEx e II, Ex e II U	

Mounting instructions

Rail	TH 35-7.5, TH 35-15
Wire stripping length	10.5 mm 0.412 in
Tool	Flat screwdriver Ø 4 mm Ø 0.157 in
Torque	0.85 Nm ± 0.15 7.52 lb.in ± 1.33

The connecting capacity data for one Rigid: Solid/Stranded, or one Flexible conductor (when applicable) is a mandatory information required by IEC, UL and CSA standards (Copper conductors). All other data are provided as supplementary information only. For more details, please consult our CB, UL or CSA certificates and technical datasheet available on http://www.TE.com

CE, CB, RoHS, USR CNR, CSA, EAC Ex, ATEX, IECEx, BR-Ex e II, Haz Loc, BV, DNV, Rina

Accessories

	Description			Color	Type	Part Number		Pkg qty	Weight (1 pce) g
1	End stops	10 mm	0.394 in	Dark grey	BAM4	1SNK900001R0000		50	14.00
2	End sections	2.2 mm	0.087 in	Dark grey	ES4	1SNK505910R0000		20	2.20
3	Jumper bars	2 poles	41 A (IEC)	Orange	JB6-2	1SNK906302R0000		50	1.30
		3 poles	41 A (IEC)		JB6-3	1SNK906303R0000		50	2.10
		4 poles	41 A (IEC)		JB6-4	1SNK906304R0000		50	2.90
		5 poles	41 A (IEC)		JB6-5	1SNK906305R0000		50	3.60
		10 poles	41 A (IEC)		JB6-10	1SNK906310R0000		20	7.40
		50 poles	41 A (IEC)		JB6-50	1SNK906350R0000		10	38.10
4	Cross spacing jumpers	3 poles	32 A (IEC)	Orange	JB85-3	1SNK900603R0000		10	2.80
5	Circuit separators	0 mm	0 in	Dark grey	CS	1SNK900101R0000		20	0.20
		3 mm	0.118 in		CS-R1	1SNK900103R0000		20	5.20
6	Test adapters	For test plugs DIA 2 mm 0.079 in		Dark grey	TP2	1SNK900203R0000		20	1.70
		For test plugs DIA 4 mm 0.157 in			TP4	1SNK900205R0000		20	2.40
7	Test connectors	End module, 5.2 mm 0.205 in		Dark grey	TC5-R1	1SNK900201R0000		10	5.20
8	Spacers	0.8 mm	0.031 in	Dark grey	ES-TC6	1SNK900105R0000		10	0.80
9	Shield connectors				SHBS	1SNK900600R0000		20	3.50
10	Protecting covers	6 mm 0.236 in spacing		Transparent	PL6	1SNK900619R0000		10	1.80
11	Terminal block markers	Blank marker		White	MG-CPM 13 41791	1SNB041791R0612		1680	0.27
		Blank card			MC612	1SNK150000R0000		22	10.00
					MC612PA	1SNK159999R0000		20	11.00
		Universal wire markers holder		Grey	UMH	1SNK900611R0000		10	0.20

Complete list of accessories is indicated in the terminal block datasheet including end stops.
Some accessories such as jumper bars may modify the terminal block's ratings: Complete information available in the accessories section of the catalog.

Ground screw clamp terminal blocks

Description		Color	Type	Part Number		Pkg qty	Weight (1 pce) g
Ground	Profile aligned with ZS6	Green-yellow	ZS6-PE	1SNK506150R0000		20	13.70

Technical data valid for copper conductors only.

1SNK161008S0201

8

ZS6-3S screw clamp terminal blocks

Feed-through with 3 connections - 6 mm 0.236 in spacing

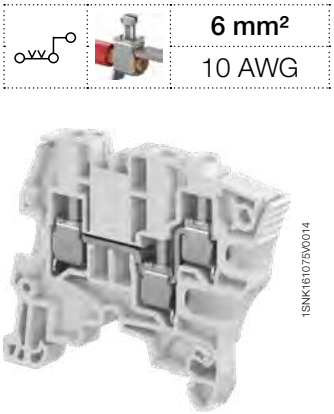

6 mm²
10 AWG

1SNK161075V0014

ZS6-3S

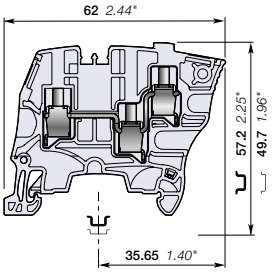

6 mm 0.236 in spacing

Description

- Recommended for energy markets and highly demanding applications requiring that only one conductor be connected per clamp,
- These blocks offer a high density connecting capacity (up to 3 connections) in a low profile and just 6 mm 0.236 in spacing.

Ordering details

Description	Color	Type	Part Number		Pkg qty	Weight (1 pce) g
Feed-through	Grey	ZS6-3S	1SNK506011R0000		50	11.80
	Blue	ZS6-3S-BL	1SNK506021R0000		50	11.80
	Yellow	ZS6-3S-YL	1SNK506067R0000		50	11.80

Main technical data

Connecting capacity		IEC	UL - CSA
1 conductor per clamp	Rigid: Solid/Stranded	0.2 ... 6 mm²	24 ... 10 AWG
	Flexible without ferrule	0.22... 6 mm²	
	Flexible with non insulated ferrule	0.22 ... 4 mm²	24 ... 12 AWG
	Flexible with insulated ferrule	0.22 ... 4 mm²	24 ... 12 AWG
	Gauge	A4-B3	
2 conductors per clamp	Rigid: Solid/Stranded	0.2 ... 2.5 mm²	24 ... 14 AWG
	Flexible without ferrule	0.2 ... 2.5 mm²	
	Flexible with twin ferrule	0.22 ... 2.5 mm²	24 ... 14 AWG
Rated current / Rated cross section		32 A / 4 mm²	30 A / 10 AWG
Maximum current / Maximum cross section		39 A / 6 mm²	
Rated short-time withstand current (1s)		480 A	
Short Circuit Current Rating (with specific conditions)			100 kA
Rated voltage		800 V	600 V
Impulse withstand voltage		8000 V	
Protection		IP20	NEMA 1
Increased safety Ex e		550 V 29 A IEC/EN 60079-7 - IM2 II 2 GD Ex eb I/II/IIIC – 600 V 30 A	

Mounting instructions

Rail	TH 35-7.5, TH 35-15
Wire stripping length	10.5 mm 0.413 in
Tool	Flat screwdriver Ø 4 mm Ø 0.157 in
Torque	0.75 Nm ± 0.05 6.64 lb.in ± 0.443

The connecting capacity data for one Rigid: Solid/Stranded, or one Flexible conductor (when applicable) is a mandatory information required by IEC, UL and CSA standards (Copper conductors). All other data are provided as supplementary information only. For more details, please consult our CB, UL or CSA certificates and technical datasheet available on http://www.TE.com

CE, CB, RoHS, USR, CSA, EAC Ex, ATEX, IECEx, BR-Ex e II, Haz Loc, BV, DNV

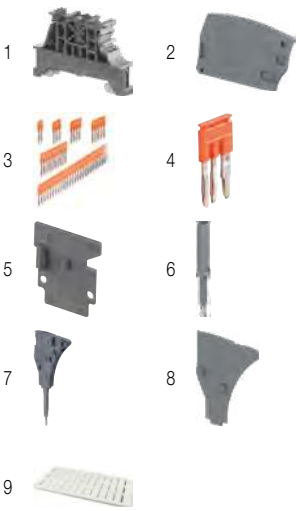

Accessories

	Description			Color	Type	Part Number		Pkg qty	Weight (1 pce) g
1	End stops	10 mm	0.394 in	Dark grey	BAM4	1SNK900001R0000		50	14.00
2	End sections	2.2 mm	0.087 in	Dark grey	ES6-3S	1SNK505912R0000		20	2.50
3	Jumper bars	2 poles	41 A (IEC)	Orange	JB6-2	1SNK906302R0000		50	1.30
		3 poles	41 A (IEC)		JB6-3	1SNK906303R0000		50	2.10
		4 poles	41 A (IEC)		JB6-4	1SNK906304R0000		50	2.90
		5 poles	41 A (IEC)		JB6-5	1SNK906305R0000		50	3.60
		10 poles	41 A (IEC)		JB6-10	1SNK906310R0000		20	7.40
		50 poles	41 A (IEC)		JB6-50	1SNK906350R0000		10	38.10
4	Cross spacing jumpers	3 poles	32 A (IEC)	Orange	JB85-3	1SNK900603R0000		10	2.80
5	Circuit separators	0 mm	0 in	Dark grey	CS	1SNK900101R0000		20	0.20
		3 mm	0.118 in		CS-R1	1SNK900103R0000		20	5.20
6	Test adapters	For test plugs DIA 2 mm 0.079 in		Dark grey	TP2	1SNK900203R0000		20	1.70
		For test plugs DIA 4 mm 0.157 in			TP4	1SNK900205R0000		20	2.40
7	Test connectors	End module, 5.2 mm 0.205 in		Dark grey	TC5-R1	1SNK900201R0000		10	5.20
8	Spacers	0.8 mm	0.031 in	Dark grey	ES-TC6	1SNK900105R0000		10	0.80
9	Terminal block markers	Blank marker		White	MG-CPM 13 41791	1SNB041791R0612		1680	0.27
		Blank card			MC612	1SNK150000R0000		22	10.00
					MC612PA	1SNK159999R0000		20	11.00
		Universal wire markers holder		Grey	UMH	1SNK900611R0000		10	0.20

Complete list of accessories is indicated in the terminal block datasheet including end stops.
Some accessories such as jumper bars may modify the terminal block's ratings: Complete information available in the accessories section of the catalog.

Ground screw clamp terminal blocks

Description		Color	Type	Part Number		Pkg qty	Weight (1 pce) g
Ground	Profile aligned with ZS6-3S	Green-yellow	ZS6-3S-PE	1SNK506151R0000		25	16.20

1SNK161067S0201

Technical data valid for copper conductors only.

ZS6-4S screw clamp terminal blocks

Feed-through with 4 connections - 6 mm 0.236 in spacing

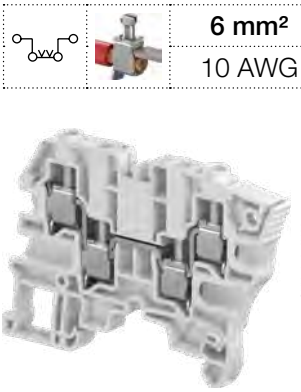

6 mm²
10 AWG

1SNK161078V0014

ZS6-4S

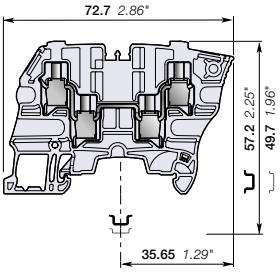

6 mm 0.236 in spacing

Description

- High density wiring (one potential distribution on 4 independent screw clamps) in a very low profile and just 6 mm 0.236 in spacing,
- Recommended for energy markets and highly demanding applications requiring that only one conductor be connected per clamp.

Ordering details

Description	Color	Type	Part Number		Pkg qty	Weight (1 pce) g
Feed-through	Grey	ZS6-4S	1SNK506012R0000		50	15.00
	Blue	ZS6-4S-BL	1SNK506022R0000		50	15.00
	Yellow	ZS6-4S-YL	1SNK506068R0000		50	15.00

Main technical data

Connecting capacity		IEC	UL - CSA
1 conductor per clamp	Rigid: Solid/Stranded	0.2 ... 6 mm²	24 ... 10 AWG
	Flexible without ferrule	0.22... 6 mm²	
	Flexible with non insulated ferrule	0.22 ... 4 mm²	24 ... 12 AWG
	Flexible with insulated ferrule	0.22 ... 4 mm²	24 ... 12 AWG
	Gauge	A4-B3	
2 conductors per clamp	Rigid: Solid/Stranded	0.2 ... 2.5 mm²	24 ... 14 AWG
	Flexible without ferrule	0.2 ... 2.5 mm²	
	Flexible with twin ferrule	0.22 ... 2.5 mm²	24 ... 14 AWG
Rated current / Rated cross section		32 A / 4 mm²	30 A / 10 AWG
Maximum current / Maximum cross section		39 A / 6 mm²	
Rated short-time withstand current (1s)		480 A	
Short Circuit Current Rating (with specific conditions)			100 kA
Rated voltage		800 V	600 V
Impulse withstand voltage		8000 V	
Protection		IP20	NEMA 1
Increased safety Ex e		550 V 29 A IEC/EN 60079-7 - IM2 II 2 GD Ex eb I/II/IIIC – 600 V 30 A	

Mounting instructions

Rail	TH 35-7.5, TH 35-15
Wire stripping length	10.5 mm 0.413 in
Tool	Flat screwdriver Ø 4 mm Ø 0.157 in
Torque	0.75 Nm ± 0.05 6.64 lb.in ± 0.443

The connecting capacity data for one Rigid: Solid/Stranded, or one Flexible conductor (when applicable) is a mandatory information required by IEC, UL and CSA standards (Copper conductors). All other data are provided as supplementary information only. For more details, please consult our CB, UL or CSA certificates and technical datasheet available on http://www.TE.com

CE, CB, RoHS, USR, CSA, EAC Ex, ATEX, IECEx, BR-Ex e II, Haz Loc, BV, DNV

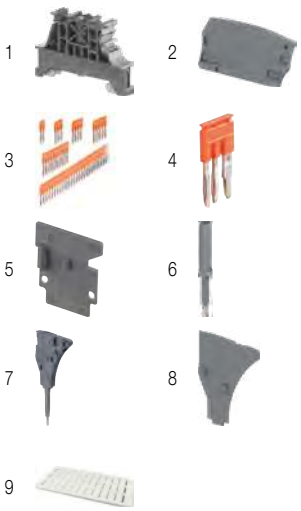

Accessories

	Description			Color	Type	Part Number		Pkg qty	Weight (1 pce) g
1	End stops	10 mm	0.394 in	Dark grey	BAM4	1SNK900001R0000		50	14.00
2	End sections	2.2 mm	0.087 in	Dark grey	ES6-4S	1SNK505911R0000		20	3.10
3	Jumper bars	2 poles	41 A (IEC)	Orange	JB6-2	1SNK906302R0000		50	1.30
		3 poles	41 A (IEC)		JB6-3	1SNK906303R0000		50	2.10
		4 poles	41 A (IEC)		JB6-4	1SNK906304R0000		50	2.90
		5 poles	41 A (IEC)		JB6-5	1SNK906305R0000		50	3.60
		10 poles	41 A (IEC)		JB6-10	1SNK906310R0000		20	7.40
		50 poles	41 A (IEC)		JB6-50	1SNK906350R0000		10	38.10
4	Cross spacing jumpers	3 poles	32 A (IEC)	Orange	JB85-3	1SNK900603R0000		10	2.80
5	Circuit separators	0 mm	0 in	Dark grey	CS	1SNK900101R0000		20	0.20
		3 mm	0.118 in		CS-R1	1SNK900103R0000		20	5.20
6	Test adapters	For test plugs DIA 2 mm 0.079 in		Dark grey	TP2	1SNK900203R0000		20	1.70
		For test plugs DIA 4 mm 0.157 in			TP4	1SNK900205R0000		20	2.40
7	Test connectors	End module, 5.2 mm 0.205 in		Dark grey	TC5-R1	1SNK900201R0000		10	5.20
8	Spacers	0.8 mm	0.031 in	Dark grey	ES-TC6	1SNK900105R0000		10	0.80
9	Terminal block markers	Blank marker		White	MG-CPM 13 41791	1SNB041791R0612		1680	0.27
		Blank card			MC612	1SNK150000R0000		22	10.00
					MC612PA	1SNK159999R0000		20	11.00
		Universal wire markers holder		Grey	UMH	1SNK900611R0000		10	0.20

Complete list of accessories is indicated in the terminal block datasheet including end stops.
Some accessories such as jumper bars may modify the terminal block's ratings: Complete information available in the accessories section of the catalog.

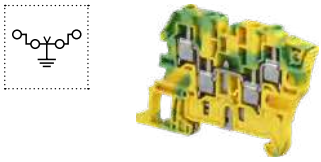

Ground screw clamp terminal blocks

Description		Color	Type	Part Number		Pkg qty	Weight (1 pce) g
Ground	Profile aligned with ZS6-4S	Green-yellow	ZS6-4S-PE	1SNK506152R0000		25	19.40

1SNK161068S0201

Technical data valid for copper conductors only.

ZS10 screw clamp terminal blocks
Feed-through - 8 mm 0.315 in spacing

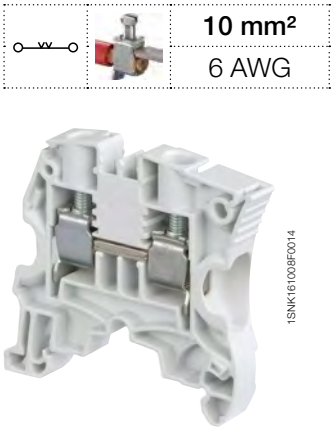

10 mm²	
6 AWG	

1SNK161009R0014

ZS10

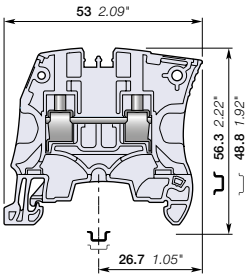

8 mm 0.315 in spacing

Description

- Save space by connecting conductors up to 10 mm² (without insulated ferrule, CB certified) 6 AWG in just 8 mm 0.315 in spacing,
- Perfectly adapted to solar applications: voltage is rated 1000 V AC / DC IEC.

Ordering details

Description	Color	Type	Part Number		Pkg qty	Weight (1 pce) g
Feed-through	Grey	ZS10	1SNK508010R0000		50	14.10
	Blue	ZS10-BL	1SNK508020R0000		50	14.10
	Orange	ZS10-OR	1SNK508030R0000		50	14.10
	Yellow	ZS10-YL	1SNK508060R0000		50	14.10
	Green	ZS10-GN	1SNK508061R0000		50	14.10
	Red	ZS10-RD	1SNK508062R0000		50	14.10
	Purple	ZS10-PR	1SNK508063R0000		50	14.10
	Brown	ZS10-BR	1SNK508064R0000		50	14.10
	White	ZS10-WH	1SNK508065R0000		50	14.10
	Black	ZS10-BK	1SNK508066R0000		50	14.10

Main technical data

Connecting capacity		IEC	UL - CSA
1 conductor per clamp	Rigid: Solid/Stranded	0.5 ... 10 mm²	24 ... 6 AWG
	Flexible without ferrule	0.5 ... 10 mm²	
	Flexible with non insulated ferrule	0.5 ... 10 mm²	24 ... 8 AWG
	Flexible with insulated ferrule	0.5 ... 6 mm²	24 ... 10 AWG
	Gauge	A5-B5	
2 conductors per clamp	Rigid: Solid/Stranded	0.5 ... 4 mm²	20 ... 12 AWG
	Flexible without ferrule	0.5 ... 4 mm²	
	Flexible with twin ferrule	0.5 ... 4 mm²	20 ... 12 AWG
Rated current / Rated cross section		57 A / 10 mm²	42 A / 6 AWG
Rated short-time withstand current (1s)		1200 A	
Short Circuit Current Rating (with specific conditions)			100 kA
Rated voltage		1000 V	600 V
Impulse withstand voltage		8000 V	
Protection		IP20	NEMA 1
Increased safety Ex e		693 V 57 A IEC/EN 60079-7 - IM2 II 2 GD Ex eb I/II/IIIC – 600 V 42 A UL 60079-7 - Class I, Zone 1, AEx e II, Ex e II U	

The connecting capacity data for one Rigid: Solid/Stranded, or one Flexible conductor (when applicable) is a mandatory information required by IEC, UL and CSA standards (Copper conductors). All other data are provided as supplementary information only. For more details, please consult our CB, UL or CSA certificates and technical datasheet available on http://www.TE.com

CE, CB, RoHS, USR CNR, CSA, EAC Ex, ATEX, IECEx, BR-Ex e II, Haz Loc, BV, DNV, Rina

Mounting instructions

Rail		TH 35-7.5, TH 35-15
Wire stripping length		12 mm 0.472 in
Tool		Flat screwdriver Ø 4 mm Ø 0.157 in
Torque		1.3 Nm ± 0.3 11.5 lb.in ± 2.65

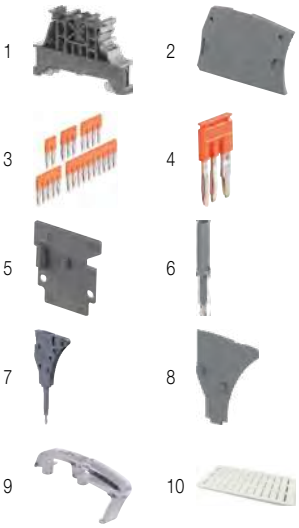

Accessories

	Description			Color	Type	Part Number		Pkg qty	Weight (1 pce) g
1	End stops	10 mm	0.394 in	Dark grey	BAM4	1SNK900001R0000		50	14.00
2	End sections	2.2 mm	0.087 in	Dark grey	ES4	1SNK505910R0000		20	2.20
3	Jumper bars	2 poles	57 A (IEC)	Orange	JB8-2	1SNK908302R0000		50	2.70
		3 poles	57 A (IEC)		JB8-3	1SNK908303R0000		50	4.10
		4 poles	57 A (IEC)		JB8-4	1SNK908304R0000		50	5.60
		5 poles	57 A (IEC)		JB8-5	1SNK908305R0000		40	7.00
		10 poles	57 A (IEC)		JB8-10	1SNK908310R0000		20	14.20
4	Cross spacing jumpers	3 poles	32 A (IEC)	Orange	JB85-3	1SNK900603R0000		10	2.80
5	Circuit separators	0 mm	0 in	Dark grey	CS	1SNK900101R0000		20	0.20
		3 mm	0.118 in		CS-R1	1SNK900103R0000		20	5.20
6	Test adapters	For test plugs DIA 2 mm 0.079 in		Dark grey	TP2	1SNK900203R0000		20	1.70
		For test plugs DIA 4 mm 0.157 in			TP4	1SNK900205R0000		20	2.40
7	Test connectors	5.2 mm 0.205 in spacing		Dark grey	TC5	1SNK900200R0000		10	5.20
		End module, 5.2 mm 0.205 in			TC5-R1	1SNK900201R0000		10	5.20
8	Spacers	2.8 mm	0.110 in	Dark grey	ES-TC8	1SNK900104R0000		10	1.40
9	Protecting covers	8 mm 0.315 in spacing		Transparent	PL8	1SNK900620R0000		10	2.60
10	Terminal block markers	Blank marker		White	MG-CPM 13 41791	1SNB041791R0612		1680	0.27
		Blank card			MC812	1SNK160000R0000		22	10.00
					MC812PA	1SNK169999R0000		20	14.00
		Universal wire markers holder		Grey	UMH	1SNK900611R0000		10	0.20

Complete list of accessories is indicated in the terminal block datasheet including end stops.
Some accessories such as jumper bars may modify the terminal block's ratings: Complete information available in the accessories section of the catalog.

Ground screw clamp terminal blocks

Description		Color	Type	Part Number		Pkg qty	Weight (1 pce) g
Ground	Profile aligned with ZS10	Green-yellow	ZS10-PE	1SNK508150R0000		20	22.50

1SNK161004S0201

Technical data valid for copper conductors only.

ZS16 screw clamp terminal blocks
Feed-through - 10 mm 0.394 in spacing

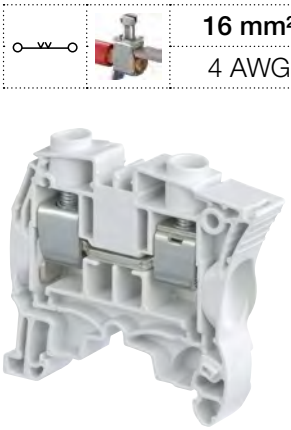

16 mm²
4 AWG

Description

- Save space by connecting conductors up to 16 mm² (without insulated ferrule, CB certified) 4 AWG in just 10 mm 0.394 in spacing,
- Perfectly adapted to solar applications: voltage is rated 1000 V AC / DC IEC.

1SNK161006F0014

ZS16

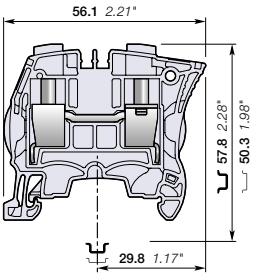

10 mm 0.394 in spacing

Ordering details

Description		Color	Type	Part Number		Pkg qty	Weight (1 pce) g
Feed-through		Grey	ZS16	1SNK510010R0000		25	20.20
		Blue	ZS16-BL	1SNK510020R0000		25	20.20
		Orange	ZS16-OR	1SNK510030R0000		25	20.20

Main technical data

Connecting capacity		IEC	UL - CSA
1 conductor per clamp	Rigid: Solid/Stranded	0.5 ... 16 mm²	24 ... 4 AWG
	Flexible without ferrule	0.5 ... 16 mm²	
	Flexible with non insulated ferrule	0.5 ... 16 mm²	24 ... 4 AWG
	Flexible with insulated ferrule	0.5 ... 10 mm²	24 ... 8 AWG
	Gauge	A6-B6	
2 conductors per clamp	Rigid: Solid/Stranded	0.5 ... 6 mm²	20 ... 10 AWG
	Flexible without ferrule	0.5 ... 6 mm²	
	Flexible with twin ferrule	0.5 ... 6 mm²	20 ... 10 AWG
Rated current / Rated cross section		76 A / 16 mm²	67 A / 4 AWG
Rated short-time withstand current (1s)		1920 A	
Short Circuit Current Rating (with specific conditions)			100 kA
Rated voltage		1000 V	600 V
Impulse withstand voltage		8000 V	
Protection		IP20	NEMA 1
Increased safety Ex e		693 V 76 A IEC/EN 60079-7 - IM2 II 2 GD Ex eb I/II/IIIC – 600 V 67 A UL 60079-7 - Class I, Zone 1, AEx e II, Ex e II U	

Mounting instructions

Rail	TH 35-7.5, TH 35-15
Wire stripping length	13.5 mm 0.531 in
Tool	Flat screwdriver Ø 5.5 mm Ø 0.217 in
Torque	1.8 Nm ± 0.2 15.9 lb.in ± 1.77

The connecting capacity data for one Rigid: Solid/Stranded, or one Flexible conductor (when applicable) is a mandatory information required by IEC, UL and CSA standards (Copper conductors). All other data are provided as supplementary information only. For more details, please consult our CB, UL or CSA certificates and technical datasheet available on http://www.TE.com

CE, CB, RoHS, USR CNR, CSA, EAC Ex, ATEX, IECEx, BR-Ex e II, Haz Loc, BV, DNV, Rina

Accessories

	Description			Color	Type	Part Number		Pkg qty	Weight (1 pce) g
1	End stops	10 mm	0.394 in	Dark grey	BAM4	1SNK900001R0000		50	14.00
2	End sections	2.2 mm	0.087 in	Dark grey	ES4	1SNK505910R0000		20	2.20
3	Jumper bars	2 poles	76 A (IEC)	Orange	JB10-2	1SNK910302R0000		50	4.60
		3 poles	76 A (IEC)		JB10-3	1SNK910303R0000		50	7.10
		4 poles	76 A (IEC)		JB10-4	1SNK910304R0000		40	9.40
		5 poles	76 A (IEC)		JB10-5	1SNK910305R0000		30	12.00
		10 poles	76 A (IEC)		JB10-10	1SNK910310R0000		20	24.00
4	Cross spacing jumpers	3 poles	32 A (IEC)	Orange	JB85-3	1SNK900603R0000		10	2.80
5	Circuit separators	0 mm	0 in	Dark grey	CS	1SNK900101R0000		20	0.20
		3 mm	0.118 in		CS-R1	1SNK900103R0000		20	5.20
6	Test adapters	For test plugs DIA 2 mm 0.079 in		Dark grey	TP2	1SNK900203R0000		20	1.70
		For test plugs DIA 4 mm 0.157 in			TP4	1SNK900205R0000		20	2.40
7	Protecting covers	10 mm 0.394 in spacing		Transparent	PL10	1SNK900621R0000		10	3.10
8	Terminal block markers	Blank marker		White	MG-CPM 13 41791	1SNB041791R0612		1680	0.27
		Blank card			MC812	1SNK160000R0000		22	10.00
					MC812PA	1SNK169999R0000		20	14.00
		Universal wire markers holder		Grey	UMH	1SNK900611R0000		10	0.20

Complete list of accessories is indicated in the terminal block datasheet including end stops.
Some accessories such as jumper bars may modify the terminal block's ratings: Complete information available in the accessories section of the catalog.

Ground screw clamp terminal blocks

Description		Color	Type	Part Number		Pkg qty	Weight (1 pce) g
Ground	Profile aligned with ZS16	Green-yellow	ZS16-PE	1SNK510150R0000		20	32.00

1SNK161017S0201

Technical data valid for copper conductors only.

ZS25 screw clamp terminal blocks
Feed-through - 12 mm 0.472 in spacing

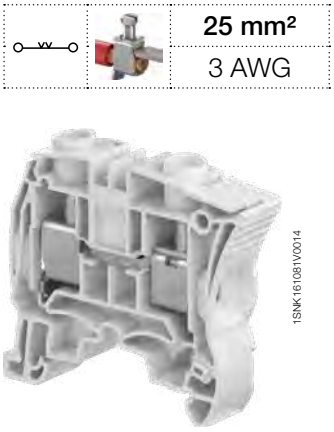

25 mm²
3 AWG

1SNK161081V0014

ZS25

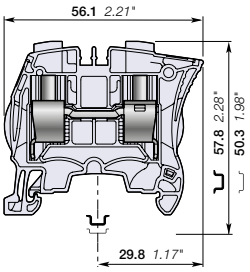

12 mm 0.472 in spacing

Description

- Save space by connecting conductors up to 25 mm² (without insulated ferrule, CB certified) 3 AWG in just 12 mm 0.472 in spacing,
- Perfectly adapted to solar applications: voltage is rated 1000 V AC / DC IEC.

Ordering details

Description	Color	Type	Part Number		Pkg qty	Weight (1 pce) g
Feed-through	Grey	ZS25	1SNK512010R0000		25	21.40
	Blue	ZS25-BL	1SNK512020R0000		25	21.40
	Yellow	ZS25-YL	1SNK512060R0000		25	21.40

Main technical data

Connecting capacity		IEC	UL - CSA
1 conductor per clamp	Rigid: Solid/Stranded	0.5 ... 25 mm²	24 ... 3 AWG
	Flexible without ferrule	0.5 ... 25 mm²	
	Flexible with non insulated ferrule	0.5 ... 16 mm²	24 ... 4 AWG
	Flexible with insulated ferrule	0.5 ... 16 mm²	24 ... 8 AWG
	Gauge	A6-B6	
2 conductors per clamp	Rigid: Solid/Stranded	0.5 ... 10 mm²	20 ... 10 AWG
	Flexible without ferrule	0.5 ... 10 mm²	
	Flexible with twin ferrule	0.5 ... 10 mm²	20 ... 10 AWG
Rated current / Rated cross section		76 A / 16 mm²	100 A / 3 AWG
Maximum current / Maximum cross section		101 A / 25 mm²	
Rated short-time withstand current (1s)		1920 A	
Short Circuit Current Rating (with specific conditions)			100 kA
Rated voltage		1000 V	600 V
Impulse withstand voltage		8000 V	
Protection		IP20	NEMA 1
Increased safety Ex e		693 V 69 A IEC/EN 60079-7 - IM2 II 2 GD Ex eb I/II/IIIC – 600 V 100 A	

Mounting instructions

Rail	TH 35-7.5, TH 35-15
Wire stripping length	13.5 mm 0.531 in
Tool	Flat screwdriver Ø 5.5 mm Ø 0.217 in
Torque	1.8 Nm ± 0.2 15.9 lb.in ± 1.77

The connecting capacity data for one Rigid: Solid/Stranded, or one Flexible conductor (when applicable) is a mandatory information required by IEC, UL and CSA standards (Copper conductors). All other data are provided as supplementary information only. For more details, please consult our CB, UL or CSA certificates and technical datasheet available on http://www.TE.com

CE, CB, RoHS, USR CNR, CSA, EAC Ex, ATEX, IECEx, BR-Ex e II, Haz Loc, BV, DNV

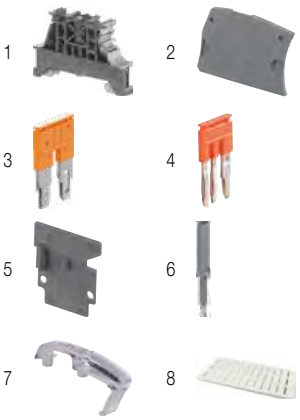

Accessories

	Description			Color	Type	Part Number		Pkg qty	Weight (1 pce) g
1	End stops	10 mm	0.394 in	Dark grey	BAM4	1SNK900001R0000		50	14.00
2	End sections	2.2 mm	0.087 in	Dark grey	ES4	1SNK505910R0000		20	2.20
3	Jumper bars	2 poles	76 A (IEC)	Orange	JB12-2	1SNK912302R0000		50	4.90
		3 poles	76 A (IEC)		JB12-3	1SNK912303R0000		50	7.60
		5 poles	76 A (IEC)		JB12-5	1SNK912305R0000		20	12.90
4	Cross spacing jumpers	3 poles	32 A (IEC)	Orange	JB85-3	1SNK900603R0000		10	2.80
5	Circuit separators	0 mm	0 in	Dark grey	CS	1SNK900101R0000		20	0.20
		3 mm	0.118 in		CS-R1	1SNK900103R0000		20	5.20
6	Test adapters	For test plugs DIA 2 mm 0.079 in		Dark grey	TP2	1SNK900203R0000		20	1.70
		For test plugs DIA 4 mm 0.157 in			TP4	1SNK900205R0000		20	2.40
7	Protecting covers	10 mm 0.394 in spacing		Transparent	PL10	1SNK900621R0000		10	3.10
8	Terminal block markers	Blank marker		White	MG-CPM 13 41791	1SNB041791R0612		1680	0.27
		Blank card			MC812	1SNK160000R0000		22	10.00
					MC812PA	1SNK169999R0000		20	14.00
		Universal wire markers holder		Grey	UMH	1SNK900611R0000		10	0.20

Complete list of accessories is indicated in the terminal block datasheet including end stops.
Some accessories such as jumper bars may modify the terminal block's ratings: Complete information available in the accessories section of the catalog.

Ground screw clamp terminal blocks

Description		Color	Type	Part Number		Pkg qty	Weight (1 pce) g
Ground	Profile aligned with ZS25	Green-yellow	ZS25-PE	1SNK512150R0000		20	38.00

1SNK161078S0201

Technical data valid for copper conductors only.

ZS35 screw clamp terminal blocks
Feed-through - 16 mm 0.630 in spacing

ZS35

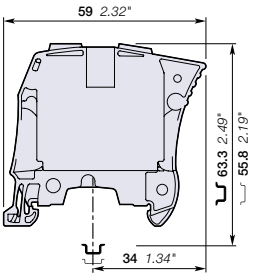

16 mm 0.630 in spacing

		35 mm²
		0 AWG

Description

Closed terminal block:
- No end section needed,
- Optimized rigidity,
- Perfectly adapted to solar applications: voltage is rated 1000 V AC / DC IEC.

Ordering details

Description		Color	Type	Part Number		Pkg qty	Weight (1 pce) g
Feed-through	Closed block	Grey	ZS35	1SNK516010R0000		20	53.40
		Blue	ZS35-BL	1SNK516020R0000		20	53.40
		Orange	ZS35-OR	1SNK516030R0000		20	53.40

Main technical data

Connecting capacity		IEC	UL - CSA
1 conductor per clamp	Rigid: Solid/Stranded	6 ... 35 mm²	10 ... 0 AWG
	Flexible without ferrule	6 ... 35 mm²	
	Flexible with non insulated ferrule	4 ... 35 mm²	10 ... 2 AWG
	Flexible with insulated ferrule	4 ... 35 mm²	10 ... 2 AWG
	Gauge	A9-B9	
2 conductors per clamp	Rigid: Solid/Stranded	6 ... 16 mm²	10 ... 6 AWG
	Flexible without ferrule	6 ... 16 mm²	
	Flexible with twin ferrule	4 ... 10 mm²	12 ... 8 AWG
Rated current / Rated cross section		125 A / 35 mm²	150 A / 0 AWG
Rated short-time withstand current (1s)		4200 A	
Short Circuit Current Rating (with specific conditions)			100 kA
Rated voltage		1000 V	600 V
Impulse withstand voltage		8000 V	
Protection		IP10	NEMA 1
Increased safety Ex e		693 V 125 A IEC/EN 60079-7 - IM2 II 2 GD Ex eb I/II/IIIC – 600 V 150 A UL 60079-7 - Class I, Zone 1, AEx e II	

Mounting instructions

Rail	TH 35-7.5, TH 35-15
Wire stripping length	17 mm 0.669 in
Tool	Flat screwdriver Ø 6.5 mm Ø 0.256 in
Torque	2.9 Nm ± 0.1 25.7 lb.in ± 0.885

The connecting capacity data for one Rigid: Solid/Stranded, or one Flexible conductor (when applicable) is a mandatory information required by IEC, UL and CSA standards (Copper conductors). All other data are provided as supplementary information only. For more details, please consult our CB, UL or CSA certificates and technical datasheet available on http://www.TE.com

CE, CB, RoHS, USR, CSA, EAC Ex, ATEX, IECEx, BR-Ex e II, Haz Loc, BV, DNV, Rina

Accessories

	Description			Color	Type	Part Number		Pkg qty	Weight (1 pce) g
1	**End stops**	10 mm	0.394 in	Dark grey	BAZH1	1SNK900102R0000		20	24.00
2	**Jumper bars**	2 poles	125 A (IEC)	Orange	JB16-2	1SNK916302R0000		10	10.00
		3 poles	125 A (IEC)		JB16-3	1SNK916303R0000		10	16.00
		4 poles	125 A (IEC)		JB16-4	1SNK916304R0000		10	22.00
		5 poles	125 A (IEC)		JB16-5	1SNK916305R0000		10	28.00
		10 poles	125 A (IEC)		JB16-10	1SNK916310R0000		10	56.60
3	**Circuit separators**	3 mm	0.118 in	Dark grey	CS-R1	1SNK900103R0000		20	5.20
4	**Protecting covers**	16 mm 0.630 in spacing		Transparent	PL16	1SNK900622R0000		10	4.60
5	**Terminal block markers**	Blank marker		White	MG-CPM 13 41791	1SNB041791R0612		1680	0.27
		Blank card			MC812	1SNK160000R0000		22	10.00
					MC812PA	1SNK169999R0000		20	14.00
		Universal wire markers holder		Grey	UMH	1SNK900611R0000		10	0.20

Complete list of accessories is indicated in the terminal block datasheet including end stops.
Some accessories such as jumper bars may modify the terminal block's ratings: Complete information available in the accessories section of the catalog.

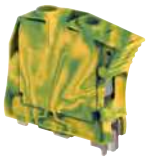

Ground screw clamp terminal blocks

Description		Color	Type	Part Number		Pkg qty	Weight (1 pce) g
Ground	Profile aligned with ZS35	Green-yellow	ZS35-PE	1SNK516150R0000		20	81.80

1SNK161019S0201

Technical data valid for copper conductors only.

ZS50 screw clamp terminal blocks
Feed-through - 16 mm 0.630 in spacing

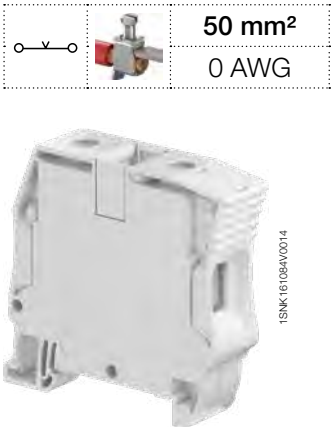

ZS50

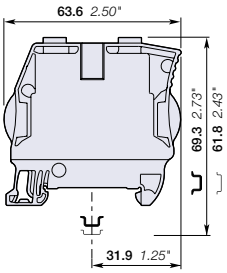

16 mm 0.630 in spacing

	50 mm²
	0 AWG

Description

Combine high performance with compact dimensions:
- Connect conductors up to 50 mm² (CB certified) 0 AWG in just 16 mm 0.630 in spacing,
- Perfectly adapted to solar applications: 1250 V DC (1000 V AC) IEC and 1000 V UL,
- Closed terminal block: no end section needed, optmized rigidity.

Ordering details

Description		Color	Type	Part Number		Pkg qty	Weight (1 pce) g
Feed-through	Closed block	Grey	ZS50	1SNK516011R0000		20	52.90
		Blue	ZS50-BL	1SNK516021R0000		20	52.90
		Yellow	ZS50-YL	1SNK516060R0000		20	52.90
		Red	ZS50-RD	1SNK516063R0000		20	52.90
		Black	ZS50-BK	1SNK516064R0000		20	52.90

Main technical data

Connecting capacity		IEC	UL - CSA
1 conductor per clamp	Rigid: Solid/Stranded	1 ... 50 mm²	18 ... 0 AWG
	Flexible without ferrule	1 ... 50 mm²	
	Flexible with non insulated ferrule	1 ... 50 mm²	18 ... 0 AWG
	Flexible with insulated ferrule	1 ... 50 mm²	18 ... 0 AWG
	Gauge	Dia.11	
2 conductors per clamp	Rigid: Solid/Stranded	1 ... 25 mm²	18 ... 4 AWG
	Flexible without ferrule	1 ... 25 mm²	
	Flexible with twin ferrule	1 ... 16 mm²	18 ... 4 AWG
Rated current / Rated cross section		150 A / 50 mm²	140 A / 0 AWG
Rated short-time withstand current (1s)		6000 A	
Short Circuit Current Rating (with specific conditions)			100 kA
Rated voltage		1000 V	1000 V
Impulse withstand voltage		8000 V	
Protection		IP10	NEMA 1
Increased safety Ex e		880 V 150 A IEC/EN 60079-7 - IM2 II 2 GD Ex eb I/II/IIIC	

Mounting instructions

Rail	TH 35-7.5, TH 35-15
Wire stripping length	17 mm 0.669 in
Tool	Flat screwdriver Ø 6.5 mm Ø 0.256 in
Torque	3 Nm ± 0.50 26.6 lb.in ± 4.43

The connecting capacity data for one Rigid: Solid/Stranded, or one Flexible conductor (when applicable) is a mandatory information required by IEC, UL and CSA standards (Copper conductors). All other data are provided as supplementary information only. For more details, please consult our CB, UL or CSA certificates and technical datasheet available on http://www.TE.com

CE, CB, RoHS, USR, CSA, EAC Ex, ATEX, IECEx, BR-Ex e II, Haz Loc, BV, DNV

Accessories

	Description			Color	Type	Part Number		Pkg qty	Weight (1 pce) g
1	**End stops**	10 mm	0.394 in	Dark grey	BAZH1	1SNK900102R0000		20	24.00
2	**Jumper bars**	2 poles	125 A (IEC)	Orange	JB16-2	1SNK916302R0000		10	10.00
		3 poles	125 A (IEC)		JB16-3	1SNK916303R0000		10	16.00
		4 poles	125 A (IEC)		JB16-4	1SNK916304R0000		10	22.00
		5 poles	125 A (IEC)		JB16-5	1SNK916305R0000		10	28.00
		10 poles	125 A (IEC)		JB16-10	1SNK916310R0000		10	56.60
3	**Terminal block markers**	Blank marker		White	MG-CPM 13 41791	1SNB041791R0612		1680	0.27
		Blank card			MC812	1SNK160000R0000		22	10.00
					MC812PA	1SNK169999R0000		20	14.00
		Universal wire markers holder		Grey	UMH	1SNK900611R0000		10	0.20

Complete list of accessories is indicated in the terminal block datasheet including end stops.
Some accessories such as jumper bars may modify the terminal block's ratings: Complete information available in the accessories section of the catalog.

Ground screw clamp terminal blocks

Description		Color	Type	Part Number		Pkg qty	Weight (1 pce) g
Ground	Profile aligned with ZS50	Green-yellow	ZS50-PE	1SNK516151R0000		20	83.00

1SNK161069S0201

Technical data valid for copper conductors only.

ZS70 screw clamp terminal blocks
Feed-through - 22 mm 0.866 in spacing

ZS70

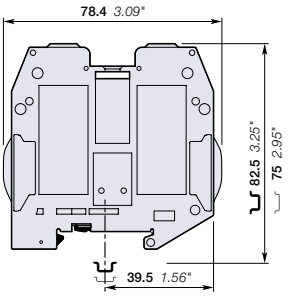

22 mm 0.866 in spacing

70 mm²
00 AWG

Description

Closed terminal block:
- No end section needed,
- Optimized rigidity,
- Perfectly adapted to solar applications: 1250 V DC (1000 V AC) IEC and 1000 V UL.

Ordering details

Description		Color	Type	Part Number		Pkg qty	Weight (1 pce) g
Feed-through	Closed block	Grey	ZS70	1SNK522010R0000		10	158.10
		Blue	ZS70-BL	1SNK522020R0000		10	158.10
		Yellow	ZS70-YL	1SNK522060R0000		10	158.10

Main technical data

Connecting capacity		IEC	UL - CSA
1 conductor per clamp	Rigid: Solid/Stranded	16 ... 95 mm²	4 ... 00 AWG
	Flexible without ferrule	16 ... 70 mm²	
	Flexible with non insulated ferrule	16 ... 50 mm²	
	Flexible with insulated ferrule	16 ... 50 mm²	
	Gauge	B11	
2 conductors per clamp	Rigid: Solid/Stranded	16 ... 35 mm²	4 ... 2 AWG
	Flexible without ferrule	16 ... 35 mm²	
	Flexible with twin ferrule	16 mm²	6 AWG
Rated current / Rated cross section		192 A / 70 mm²	159 A / 00 AWG
Rated short-time withstand current (1s)		8400 A	
Short Circuit Current Rating (with specific conditions)			100 kA
Rated voltage		1000 V	1000 V
Impulse withstand voltage		8000 V	
Protection		IP10	NEMA 1
Increased safety Ex e		693 V 192 A IEC/EN 60079-7 - IM2 II 2 GD Ex eb I/II/IIIC – 600 V 159 A UL 60079-7 - Class I, Zone 1, AEx e II, Ex e II U	

Mounting instructions

Rail		TH 35-7.5, TH 35-15
Wire stripping length		25 mm 0.984 in
Tool		Allen key Ø 6 mm Ø 0.236 in
Torque		6.5 Nm ± 0.5 57.5 lb.in ± 4.43

The connecting capacity data for one Rigid: Solid/Stranded, or one Flexible conductor (when applicable) is a mandatory information required by IEC, UL and CSA standards (Copper conductors). All other data are provided as supplementary information only. For more details, please consult our CB, UL or CSA certificates and technical datasheet available on http://www.TE.com

CE, CB, RoHS, USR CNR, CSA, EAC Ex, ATEX, IECEx, BR-Ex e II, Haz Loc, BV, DNV, Rina

1
2
3

Accessories

	Description			Color	Type	Part Number		Pkg qty	Weight (1 pce) g
1	**End stops**	10 mm	0.394 in	Dark grey	BAZH1	1SNK900102R0000		20	24.00
2	**Jumper bars**	2 poles	192 A (IEC)		JB22-2	1SNK922302R0000		5	27.00
		3 poles	192 A (IEC)		JB22-3	1SNK922303R0000		5	43.30
		5 poles	192 A (IEC)		JB22-5	1SNK922305R0000		5	76.10
		10 poles	192 A (IEC)		JB22-10	1SNK922310R0000		5	157.40
3	**Terminal block markers**	Blank marker		White	MG-CPM 13 41791	1SNB041791R0612		1680	0.27
		Blank card			MC812	1SNK160000R0000		22	10.00
					MC812PA	1SNK169999R0000		20	14.00
		Universal wire markers holder		Grey	UMH	1SNK900611R0000		10	0.20

Complete list of accessories is indicated in the terminal block datasheet including end stops.
Some accessories such as jumper bars may modify the terminal block's ratings: Complete information available in the accessories section of the catalog.

Ground screw clamp terminal blocks

Description		Color	Type	Part Number		Pkg qty	Weight (1 pce) g
Ground	Profile aligned with ZS70	Green-yellow	ZS70-PE	1SNK522150R0000		10	222.00

Technical data valid for copper conductors only.

1SNK161021S0201

ZS95 screw clamp terminal blocks
Feed-through - 26 mm 1.024 in spacing

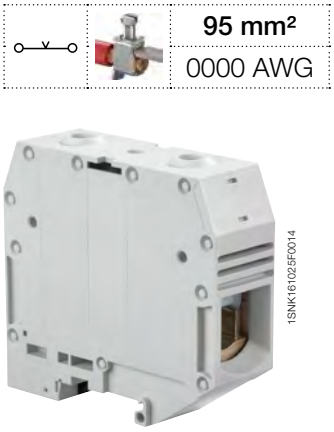

ZS95

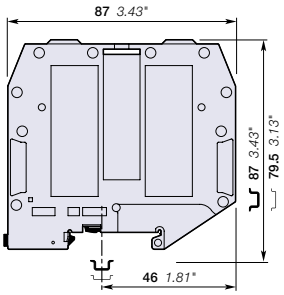

26 mm 1.024 in spacing

Description

Closed terminal block:
- No end section needed,
- Optimized rigidity,
- Perfectly adapted to solar applications: 1250 V DC (1000 V AC) IEC and 1000 V UL.

Ordering details

Description		Color	Type	Part Number		Pkg qty	Weight (1 pce) g
Feed-through	Closed block	Grey	ZS95	1SNK526010R0000		10	215.10
		Blue	ZS95-BL	1SNK526020R0000		10	215.10
		Yellow	ZS95-YL	1SNK526060R0000		10	215.10

Main technical data

Connecting capacity		IEC	UL - CSA
1 conductor per clamp	Rigid: Solid/Stranded	35 ... 120 mm²	2 ... 0000 AWG
	Flexible without ferrule	35 ... 95 mm²	
	Flexible with non insulated ferrule	35 ... 50 mm²	
	Flexible with insulated ferrule	35 ... 50 mm²	
	Gauge	B12	
2 conductors per clamp	Rigid: Solid/Stranded	25 ... 35 mm²	4 ... 2 AWG
	Flexible without ferrule	25 ... 35 mm²	
	Flexible with twin ferrule	16 mm²	6 AWG
Rated current / Rated cross section		232 A / 95 mm²	230 A / 0000 AWG
Rated short-time withstand current (1s)		11400 A	
Short Circuit Current Rating (with specific conditions)			100 kA
Rated voltage		1000 V	1000 V
Impulse withstand voltage		8000 V	
Protection		IP10	NEMA 1
Increased safety Ex e		693 V 232 A IEC/EN 60079-7 - IM2 II 2 GD Ex eb I/II/IIIC – 600 V 230 A UL 60079-7 - Class I, Zone 1, AEx e II	

Mounting instructions

Rail		TH 35-7.5, TH 35-15
Wire stripping length		26 mm 1.024 in
Tool		Allen key Ø 6 mm Ø 0.236 in
Torque		9.25 Nm ± 0.25 81.7 lb.in ± 2.21

The connecting capacity data for one Rigid: Solid/Stranded, or one Flexible conductor (when applicable) is a mandatory information required by IEC, UL and CSA standards (Copper conductors). All other data are provided as supplementary information only. For more details, please consult our CB, UL or CSA certificates and technical datasheet available on http://www.TE.com

CE, CB, RoHS, USR, CSA, EAC Ex, ATEX, IECEx, BR-Ex e II, Haz Loc, BV, DNV, Rina

1
2
3

Accessories

	Description			Color	Type	Part Number		Pkg qty	Weight (1 pce) g
1	**End stops**	10 mm	0.394 in	Dark grey	BAZH1	1SNK900102R0000		20	24.00
2	**Jumper bars**	2 poles	232 A (IEC)		JB26-2	1SNK926302R0000		5	41.20
		3 poles	232 A (IEC)		JB26-3	1SNK926303R0000		5	65.70
		5 poles	232 A (IEC)		JB26-5	1SNK926305R0000		5	115.70
		10 poles	232 A (IEC)		JB26-10	1SNK926310R0000		5	241.50
3	**Terminal block markers**	Blank marker		White	MG-CPM 13 41791	1SNB041791R0612		1680	0.27
		Blank card			MC812	1SNK160000R0000		22	10.00
					MC812PA	1SNK169999R0000		20	14.00
		Universal wire markers holder		Grey	UMH	1SNK900611R0000		10	0.20

Complete list of accessories is indicated in the terminal block datasheet including end stops.
Some accessories such as jumper bars may modify the terminal block's ratings: Complete information available in the accessories section of the catalog.

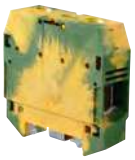

Ground screw clamp terminal blocks

Description		Color	Type	Part Number		Pkg qty	Weight (1 pce) g
Ground	Profile aligned with ZS95	Green-yellow	ZS95-PE	1SNK526150R0000		10	278.00

1SNK161023S0201

Technical data valid for copper conductors only.

ZS150 screw clamp terminal blocks
Feed-through - 31 mm 1.220 in spacing

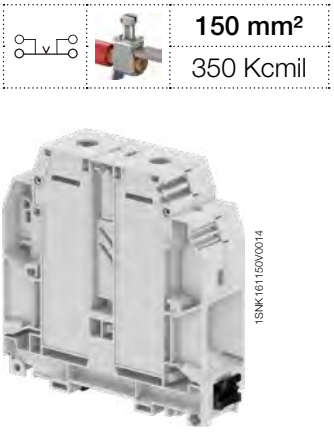

ZS150

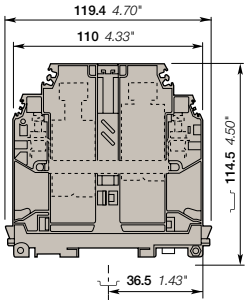

31 mm 1.220 in spacing

150 mm²	
350 Kcmil	

Description

- Perfectly adapted to solar applications : 1500V DC (1000V AC) IEC and 1000V UL,
- Closed terminal block: no end section needed, optimized rigidity,
- Ease your voltage monitoring or distribution with the 2 built-in derivations,
- Use of jumper bars requires the user to cut-out the partition.

Ordering details

Description		Color	Type	Part Number		Pkg qty	Weight (1 pce) g
Feed-through	Closed block with 2 x 10 mm² derivations.	Grey	ZS150	1SNK531010R0000		5	318.00
		Blue	ZS150-BL	1SNK531020R0000		5	318.00
		Yellow	ZS150-YL	1SNK531060R0000		5	318.00

Main technical data

Connecting capacity			IEC	UL	CSA
Main circuit with 1 conductor per clamp	Rigid: Solid/Stranded		35 ... 185 mm²	2 ... 350 Kcmil	2 ... 350 Kcmil
	Flexible without ferrule		50 ... 150 mm²		
	Flexible with insulated ferrule				
	Gauge		B14		
Derivation with 1 conductor per clamp	Rigid: Solid/Stranded		0.5 ... 16 mm²	20 ... 8 AWG	20 ... 8 AWG
	Flexible without ferrule		0.5 ... 10 mm²	20 ... 8 Kcmil	20 ... 8 Kcmil
	Gauge		B6		
Rated current / Rated cross section					
	Main circuit	Copper	309 A / 150 mm²	310 A / 350 Kcmil	310 A / 350 Kcmil
		Aluminium			
	Derivation		57 A / 10 mm²	50 A / 8 AWG	50 A / 8 AWG
Rated short-time withstand current (1s)			18000 A		
Rated voltage	V AC		1000 V	1000 V	1000 V
	V DC		1500		
Impulse withstand voltage			12000 V		
Protection			IP10	NEMA 1	
Increased safety Ex e			1000 V 309 A IEC/EN 60079-7 - IM2 II 2 GD Ex eb I/II/IIIC		

The connecting capacity data for one Rigid: Solid/Stranded, or one Flexible conductor (when applicable) is a mandatory information required by IEC, UL and CSA standards (Copper conductors). All other data are provided as supplementary information only. For more details, please consult our CB, UL or CSA certificates and technical datasheet available on http://www.TE.com

CE, CB, RoHS, USR CNR, CSA, EAC, ATEX, IECEx, BV

Mounting instructions

Rail		TH 35-7.5, TH 35-15
Main circuit		
Wire stripping length		40 mm 1.575 in
Tool		Allen key Ø 8 mm Ø 0.315 in
Torque		20 Nm 177 lb.in
Derivation		
Wire stripping length		12 mm 0.47 in
Tool		Flat screwdriver Ø 4 mm Ø 0.157 in
Torque		1.2 Nm ... 1.4 Nm 10.6 lb.in ... 12.3 lb.in

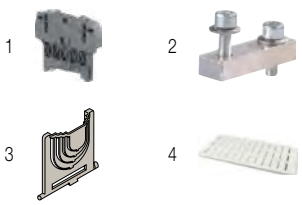

Accessories

	Description			Color	Type	Part Number		Pkg qty	Weight (1 pce) g
1	**End stops**	10 mm	0.394 in	Dark grey	BAZH1	1SNK900102R0000		20	24.00
2	**Jumper bars**	2 poles	309 A (IEC)		BJMI31.2	1SNA206053R0700		1	120.00
		3 poles	309 A (IEC)		BJMI31.3	1SNA206054R0000		1	190.00
3	**Protecting covers**				CPBP1	1SNA399788R1600		20	0.40
4	**Terminal block markers**	Blank card		White	RC1010	1SNA238000R1600		10	1.30
		Blank marker			MG-CPM 13 41791	1SNB041791R0612		1680	0.27
		Blank card			MC812	1SNK160000R0000		22	10.00
					MC812PA	1SNK169999R0000		20	14.00
		Universal wire markers holder		Grey	UMH	1SNK900611R0000		10	0.20

Complete list of accessories is indicated in the terminal block datasheet including end stops.
Some accessories such as jumper bars may modify the terminal block's ratings: Complete information available in the accessories section of the catalog.

8

1SNK161093S0201

Technical data valid for copper conductors only.

ZS240 screw clamp terminal blocks
Feed-through - 36 mm 1.417 in spacing

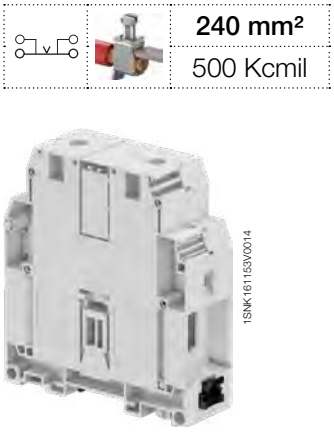

ZS240

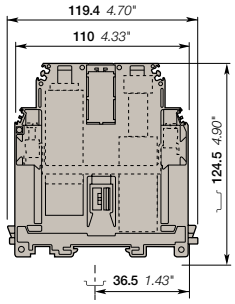

36 mm 1.417 in spacing

	240 mm²
	500 Kcmil

Description

- Perfectly adapted to solar applications : 1500V DC (1000V AC) IEC and 1000V UL,
- UL Certified for aluminum cables use - Closed terminal block: no end section needed, optimized rigidity,
- Ease your voltage monitoring or distribution with the 2 built-in derivations,
- Use of jumper bars requires the user to cut-out the partition.

Ordering details

Description		Color	Type	Part Number		Pkg qty	Weight (1 pce) g
Feed-through	Closed block with 2 x 10 mm² derivations.	Grey	ZS240	1SNK536010R0000		5	366.00
		Blue	ZS240-BL	1SNK536020R0000		5	366.00
		Yellow	ZS240-YL	1SNK536060R0000		5	366.00

Main technical data

Connecting capacity			IEC	UL	CSA
Main circuit with 1 conductor per clamp	Rigid: Solid/Stranded		50 ... 300 mm²	0 ... 500 Kcmil	0 ... 500 Kcmil
	Flexible without ferrule		50 ... 240 mm²		
	Flexible with insulated ferrule				
	Gauge		B14		
Derivation with 1 conductor per clamp	Rigid: Solid/Stranded		0.5 ... 16 mm²	20 ... 8 AWG	20 ... 8 AWG
	Flexible without ferrule		0.5 ... 10 mm²	20 ... 8 Kcmil	20 ... 8 Kcmil
	Gauge		B6		
Rated current / Rated cross section					
	Main circuit	Copper	415 A / 240 mm²	380 A / 500 Kcmil	380 A / 500 Kcmil
		Aluminium		271 / 500 Kcmil	271 / 500 Kcmil
	Derivation		57 A / 10 mm²	50 A / 8 AWG	50 A / 8 AWG
Rated short-time withstand current (1s)			28800 A		
Rated voltage	V AC		1000 V	1000 V	1000 V
	V DC		1500		
Impulse withstand voltage			12000 V		
Protection			IP10	NEMA 1	
Increased safety Ex e			1000 V 415 A IEC/EN 60079-7 - IM2 II 2 GD Ex eb I/II/IIIC		

Mounting instructions

Rail		TH 35-7.5, TH 35-15
Main circuit		
Wire stripping length		38 mm 1.496 in
Tool		Allen key Ø 8 mm Ø 0.315 in
Torque		25 Nm 221.3 lb.in
Derivation		
Wire stripping length		12 mm 0.47 in
Tool		Flat screwdriver Ø 4 mm Ø 0.157 in
Torque		1.2 Nm ... 1.4 Nm 10.6 lb.in ... 12.3 lb.in

The connecting capacity data for one Rigid: Solid/Stranded, or one Flexible conductor (when applicable) is a mandatory information required by IEC, UL and CSA standards (Copper conductors). All other data are provided as supplementary information only. For more details, please consult our CB, UL or CSA certificates and technical datasheet available on http://www.TE.com

CE, CB, RoHS, USR CNR, CSA, EAC, ATEX, IECEx, BV

Accessories

	Description			Color	Type	Part Number		Pkg qty	Weight (1 pce) g
1	**End stops**	10 mm	0.394 in	Dark grey	BAZH1	1SNK900102R0000		20	24.00
2	**Jumper bars**	2 poles	415 A (IEC)		BJMI36.2	1SNA206126R2500		1	170.00
		3 poles	415 A (IEC)		BJMI36.3	1SNA206223R0600		1	260.00
3	**Protecting covers**				CPBP2	1SNA399787R0500		20	1.30
4	**Terminal block markers**	Blank card		White	RC1010	1SNA238000R1600		10	1.30
		Blank marker			MG-CPM 13 41791	1SNB041791R0612		1680	0.27
		Blank card			MC812	1SNK160000R0000		22	10.00
					MC812PA	1SNK169999R0000		20	14.00
		Universal wire markers holder		Grey	UMH	1SNK900611R0000		10	0.20

Complete list of accessories is indicated in the terminal block datasheet including end stops.
Some accessories such as jumper bars may modify the terminal block's ratings: Complete information available in the accessories section of the catalog.

1SNK161094S0201

Technical data valid for copper conductors only.

ZS4-PE screw clamp terminal blocks
Ground - 5.2 mm 0.205 in spacing

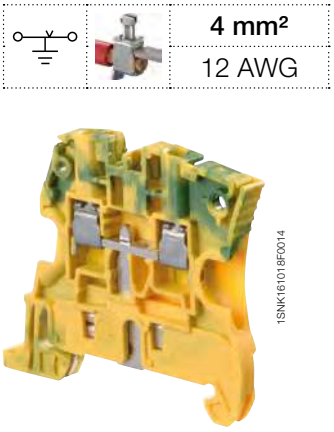

ZS4-PE

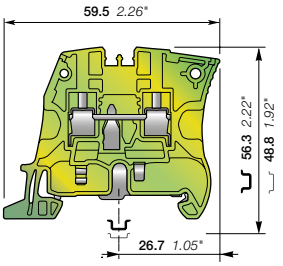

5.2 mm 0.205 in spacing

		4 mm²
		12 AWG

Description

Improve the safety of your installation in the event of a short-circuit thanks to our screwless rail contact:
- Rail contact non operator dependent,
- Performances above the requirements of IEC 60947-7-2 terminal block standard,
- Secured snap on or remove from the rail.

Ordering details

Description		Color	Type	Part Number		Pkg qty	Weight (1 pce) g
Ground	Screwless rail connection	Green-yellow	ZS4-PE	1SNK505150R0000		20	12.10

Main technical data

Connecting capacity		IEC	UL - CSA
1 conductor per clamp	Rigid: Solid/Stranded	0.2 ... 4 mm²	24 ... 12 AWG
	Flexible without ferrule	0.22 ... 4 mm²	
	Flexible with non insulated ferrule	0.22 ... 4 mm²	24 ... 12 AWG
	Flexible with insulated ferrule	0.22 ... 2.5 mm²	24 ... 14 AWG
	Gauge	A3-B3	
Rated cross section		4 mm²	12 AWG
Rated short-time withstand current (1s)		480 A	396 A
Protection		IP20	NEMA 1
Explosive atmosphere classification		IM2 II 2 GD Ex eb I/II/IIIC – Class I, Zone 1, AEx e II, Ex e II U	

Mounting instructions

Rail	TH 35-7.5, TH 35-15
Wire stripping length	10.5 mm 0.412 in
Tool	Flat screwdriver Ø 3.5 mm Ø 0.138 in
Torque	0.6 Nm ± 0.1 5.31 lb.in ± 0.885

The connecting capacity data for one Rigid: Solid/Stranded, or one Flexible conductor (when applicable) is a mandatory information required by IEC, UL and CSA standards (Copper conductors). All other data are provided as supplementary information only. For more details, please consult our CB, UL or CSA certificates and technical datasheet available on http://www.TE.com

CE, CB, RoHS, USR CNR, CSA, EAC Ex, ATEX, IECEx, BR-Ex e II, Haz Loc, BV, DNV, Rina

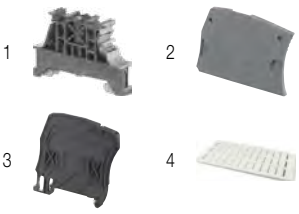

Accessories

	Description			Color	Type	Part Number		Pkg qty	Weight (1 pce) g
1	**End stops**	10 mm	0.394 in	Dark grey	BAM4	1SNK900001R0000		50	14.00
2	**End sections**	2.2 mm	0.087 in	Dark grey	ES4	1SNK505910R0000		20	2.20
3	**Circuit separators**	3 mm	0.118 in	Dark grey	CS-R1	1SNK900103R0000		20	5.20
4	**Terminal block markers**	Blank marker		White	MG-CPM 13 41790	1SNB041790R0512		1960	0.23
		Blank card			MC512	1SNK140000R0000		22	9.00
					MC512PA	1SNK149999R0000		20	10.00
		Universal wire markers holder		Grey	UMH	1SNK900611R0000		10	0.20

Complete list of accessories is indicated in the terminal block datasheet including end stops.
Some accessories such as jumper bars may modify the terminal block's ratings: Complete information available in the accessories section of the catalog.

1SNK161002S0201

Technical data valid for copper conductors only.

ZS6-PE screw clamp terminal blocks
Ground - 6 mm 0.236 in spacing

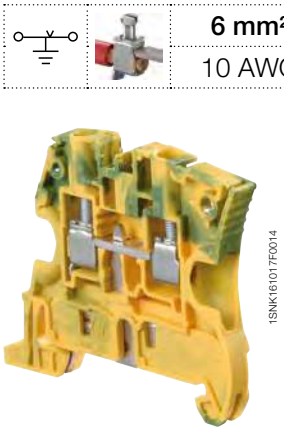

ZS6-PE

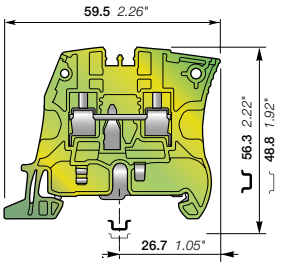

6 mm 0.236 in spacing

	6 mm²
	10 AWG

Description

Improve the safety of your installation in the event of a short-circuit thanks to our screwless rail contact:
- Rail contact non operator dependent,
- Performances above the requirements of IEC 60947-7-2 terminal block standard,
- Secured snap on or remove from the rail.

Ordering details

Description		Color	Type	Part Number		Pkg qty	Weight (1 pce) g
Ground	Screwless rail connection	Green-yellow	ZS6-PE	1SNK506150R0000		20	13.70

Main technical data

Connecting capacity		IEC	UL - CSA
1 conductor per clamp	Rigid: Solid/Stranded	0.2 ... 6 mm²	24 ... 10 AWG
	Flexible without ferrule	0.2 ... 6 mm²	
	Flexible with non insulated ferrule	0.22 ... 4 mm²	24 ... 12 AWG
	Flexible with insulated ferrule	0.22 ... 4 mm²	24 ... 12 AWG
	Gauge	A4-B3	
Rated cross section		6 mm²	10 AWG
Rated short-time withstand current (1s)		720 A	636 A
Protection		IP20	NEMA 1
Explosive atmosphere classification		IM2 II 2 GD Ex eb I/II/IIIC – Class I, Zone 1, AEx e II, Ex e II U	

The connecting capacity data for one Rigid: Solid/Stranded, or one Flexible conductor (when applicable) is a mandatory information required by IEC, UL and CSA standards (Copper conductors). All other data are provided as supplementary information only. For more details, please consult our CB, UL or CSA certificates and technical datasheet available on http://www.TE.com

Mounting instructions

Rail	TH 35-7.5, TH 35-15
Wire stripping length	10.5 mm 0.412 in
Tool	Flat screwdriver Ø 4 mm Ø 0.157 in
Torque	0.85 Nm ± 0.15 7.52 lb.in ± 1.33

CE, CB, RoHS, USR CNR, CSA, EAC Ex, ATEX, IECEx, BR-Ex e II, Haz Loc, BV, DNV, Rina

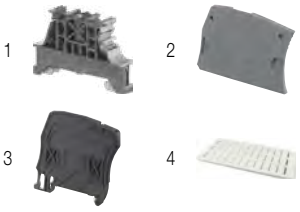

Accessories

	Description			Color	Type	Part Number		Pkg qty	Weight (1 pce) g
1	**End stops**	10 mm	0.394 in	Dark grey	BAM4	1SNK900001R0000		50	14.00
2	**End sections**	2.2 mm	0.087 in	Dark grey	ES4	1SNK505910R0000		20	2.20
3	**Circuit separators**	3 mm	0.118 in	Dark grey	CS-R1	1SNK900103R0000		20	5.20
4	**Terminal block markers**	Blank marker		White	MG-CPM 13 41791	1SNB041791R0612		1680	0.27
		Blank card			MC612	1SNK150000R0000		22	10.00
					MC612PA	1SNK159999R0000		20	11.00
		Universal wire markers holder		Grey	UMH	1SNK900611R0000		10	0.20

Complete list of accessories is indicated in the terminal block datasheet including end stops.
Some accessories such as jumper bars may modify the terminal block's ratings: Complete information available in the accessories section of the catalog.

1SNK161015S0201

Technical data valid for copper conductors only.

ZS6-3S-PE screw clamp terminal blocks

Ground with 3 connections - 6 mm 0.236 in spacing

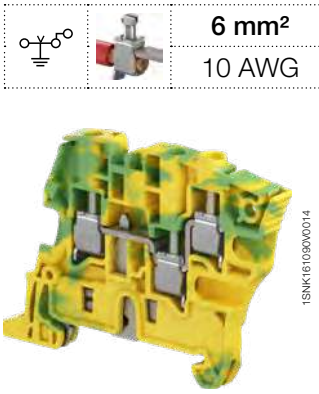

ZS6-3S-PE

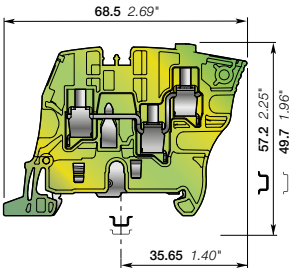

6 mm 0.236 in spacing

	6 mm²
	10 AWG

Description

Improve the safety of your installation in the event of a short-circuit thanks to our screwless rail contact:
- rail contact non operator dependent, secured snap on or off the rail,
- Same profile as ZS6-3S for aligned marking and identical end section.

Ordering details

Description		Color	Type	Part Number		Pkg qty	Weight (1 pce) g
Ground	Screwless rail connection	Green-yellow	ZS6-3S-PE	1SNK506151R0000		25	16.20

Main technical data

Connecting capacity		IEC	UL - CSA
1 conductor per clamp	Rigid: Solid/Stranded	0.2 ... 6 mm²	24 ... 10 AWG
	Flexible without ferrule	0.22... 6 mm²	
	Flexible with non insulated ferrule	0.22 ... 4 mm²	24 ... 12 AWG
	Flexible with insulated ferrule	0.22 ... 4 mm²	24 ... 12 AWG
	Gauge	A4-B3	
Rated cross section		4 mm²	10 AWG
Maximum cross section		6 mm²	
Rated short-time withstand current (1s)		480 A	636 A
Maximum short-time withstand current (1s)		480 A	
Protection		IP20	NEMA 1
Explosive atmosphere classification		IM2 II 2 GD Ex eb I/II/IIIC – Class I, Zone 1, AEx e II	

Mounting instructions

Rail	TH 35-7.5, TH 35-15
Wire stripping length	10.5 mm 0.413 in
Tool	Flat screwdriver Ø 4 mm Ø 0.157 in
Torque	0.75 Nm ± 0.05 6.64 lb.in ± 0.443

The connecting capacity data for one Rigid: Solid/Stranded, or one Flexible conductor (when applicable) is a mandatory information required by IEC, UL and CSA standards (Copper conductors). All other data are provided as supplementary information only. For more details, please consult our CB, UL or CSA certificates and technical datasheet available on http://www.TE.com

CE, CB, RoHS, USR, CSA, EAC Ex, ATEX, IECEx, BR-Ex e II, Haz Loc, BV, DNV

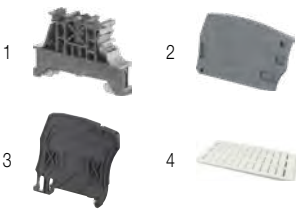

Accessories

	Description			Color	Type	Part Number		Pkg qty	Weight (1 pce) g
1	**End stops**	10 mm	0.394 in	Dark grey	BAM4	1SNK900001R0000		50	14.00
2	**End sections**	2.2 mm	0.087 in	Dark grey	ES6-3S	1SNK505912R0000		20	2.50
3	**Circuit separators**	3 mm	0.118 in	Dark grey	CS-R1	1SNK900103R0000		20	5.20
4	**Terminal block markers**	Blank marker		White	MG-CPM 13 41791	1SNB041791R0612		1680	0.27
		Blank card			MC612	1SNK150000R0000		22	10.00
					MC612PA	1SNK159999R0000		20	11.00
		Universal wire markers holder		Grey	UMH	1SNK900611R0000		10	0.20

Complete list of accessories is indicated in the terminal block datasheet including end stops.
Some accessories such as jumper bars may modify the terminal block's ratings: Complete information available in the accessories section of the catalog.

1SNK161080S0201

Technical data valid for copper conductors only.

ZS6-4S-PE screw clamp terminal blocks

Ground with 4 connections - 6 mm 0.236 in spacing

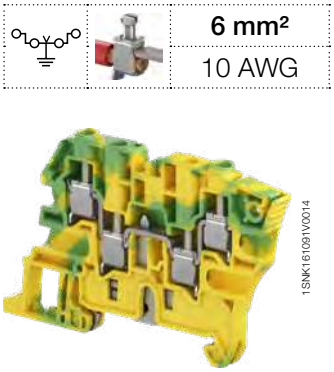

ZS6-4S-PE

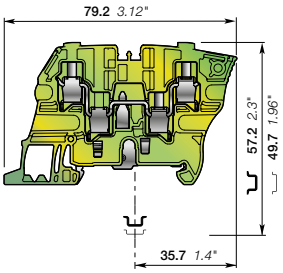

6 mm 0.236 in spacing

	6 mm²
	10 AWG

Description

Improve the safety of your installation in the event of a short-circuit thanks to our screwless rail contact:
- rail contact non operator dependent, secured snap on or off the rail,
- Same profile as ZS6-4S for aligned marking and identical end section.

Ordering details

Description		Color	Type	Part Number		Pkg qty	Weight (1 pce) g
Ground	Screwless rail connection	Green-yellow	ZS6-4S-PE	1SNK506152R0000		25	19.40

Main technical data

Connecting capacity		IEC	UL - CSA
1 conductor per clamp	Rigid: Solid/Stranded	0.2 ... 6 mm²	24 ... 10 AWG
	Flexible without ferrule	0.22... 6 mm²	
	Flexible with non insulated ferrule	0.22 ... 4 mm²	24 ... 12 AWG
	Flexible with insulated ferrule	0.22 ... 4 mm²	24 ... 12 AWG
	Gauge	A4-B3	
Rated cross section		4 mm²	10 AWG
Maximum cross section		6 mm²	
Rated short-time withstand current (1s)		480 A	636 A
Maximum short-time withstand current (1s)		480 A	
Protection		IP20	NEMA 1
Explosive atmosphere classification		IM2 II 2 GD Ex eb I/II/IIIC – Class I, Zone 1, AEx e II	

Mounting instructions

Rail	TH 35-7.5, TH 35-15
Wire stripping length	10.5 mm 0.413 in
Tool	Flat screwdriver Ø 4 mm Ø 0.157 in
Torque	0.75 Nm ± 0.05 6.64 lb.in ± 0.443

The connecting capacity data for one Rigid: Solid/Stranded, or one Flexible conductor (when applicable) is a mandatory information required by IEC, UL and CSA standards (Copper conductors). All other data are provided as supplementary information only. For more details, please consult our CB, UL or CSA certificates and technical datasheet available on http://www.TE.com

CE, CB, RoHS, USR, CSA, EAC Ex, ATEX, IECEx, BR-Ex e II, Haz Loc, BV, DNV

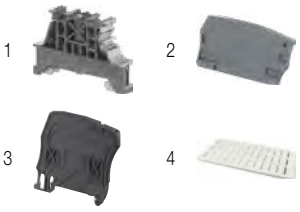

Accessories

	Description			Color	Type	Part Number		Pkg qty	Weight (1 pce) g
1	**End stops**	10 mm	0.394 in	Dark grey	BAM4	1SNK900001R0000		50	14.00
2	**End sections**	2.2 mm	0.087 in	Dark grey	ES6-4S	1SNK505911R0000		20	3.10
3	**Circuit separators**	3 mm	0.118 in	Dark grey	CS-R1	1SNK900103R0000		20	5.20
4	**Terminal block markers**	Blank marker		White	MG-CPM 13 41791	1SNB041791R0612		1680	0.27
		Blank card			MC612	1SNK150000R0000		22	10.00
					MC612PA	1SNK159999R0000		20	11.00
		Universal wire markers holder		Grey	UMH	1SNK900611R0000		10	0.20

Complete list of accessories is indicated in the terminal block datasheet including end stops.
Some accessories such as jumper bars may modify the terminal block's ratings: Complete information available in the accessories section of the catalog.

1SNK161081S0201

Technical data valid for copper conductors only.

ZS10-PE screw clamp terminal blocks

Ground - 8 mm 0.315 in spacing

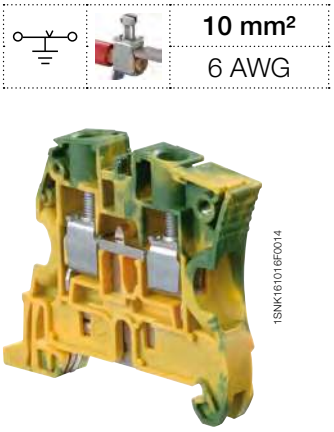

1SNK161016F0014

ZS10-PE

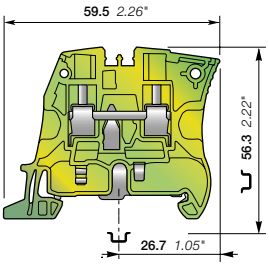

8 mm 0.315 in spacing

	10 mm²
	6 AWG

Description

Improve the safety of your installation in the event of a short-circuit thanks to our screwless rail contact:

- Rail contact non operator dependent,
- Performances above the requirements of IEC 60947-7-2 terminal block standard,
- Secured snap on or remove from the rail.

Ordering details

Description		Color	Type	Part Number		Pkg qty	Weight (1 pce) g
Ground	Screwless rail connection	Green-yellow	ZS10-PE	1SNK508150R0000		20	22.50

Main technical data

Connecting capacity		IEC	UL - CSA
1 conductor per clamp	Rigid: Solid/Stranded	0.5 ... 10 mm²	24 ... 6 AWG
	Flexible without ferrule	0.5 ... 10 mm²	
	Flexible with non insulated ferrule	0.5 ... 10 mm²	24 ... 8 AWG
	Flexible with insulated ferrule	0.5 ... 6 mm²	24 ... 8 AWG
	Gauge	A5-B5	
Rated cross section		10 mm²	6 AWG
Rated short-time withstand current (1s)		1200 A	1596 A
Protection		IP20	NEMA 1
Explosive atmosphere classification		IM2 II 2 GD Ex eb I/II/IIIC – Class I, Zone 1, AEx e II, Ex e II U	

Mounting instructions

Rail	TH 35-7.5, TH 35-15
Wire stripping length	12 mm 0.472 in
Tool	Flat screwdriver Ø 4 mm Ø 0.157 in
Torque	1.3 Nm ± 0.3 11.5 lb.in ± 2.65

The connecting capacity data for one Rigid: Solid/Stranded, or one Flexible conductor (when applicable) is a mandatory information required by IEC, UL and CSA standards (Copper conductors). All other data are provided as supplementary information only. For more details, please consult our CB, UL or CSA certificates and technical datasheet available on http://www.TE.com

CE, CB, RoHS, USR CNR, CSA, EAC Ex, ATEX, IECEx, BR-Ex e II, Haz Loc, BV, DNV, Rina

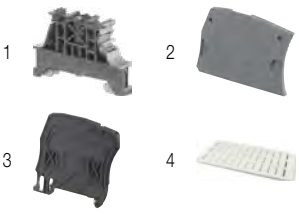

Accessories

	Description			Color	Type	Part Number		Pkg qty	Weight (1 pce) g
1	**End stops**	10 mm	0.394 in	Dark grey	BAM4	1SNK900001R0000		50	14.00
2	**End sections**	2.2 mm	0.087 in	Dark grey	ES4	1SNK505910R0000		20	2.20
3	**Circuit separators**	3 mm	0.118 in	Dark grey	CS-R1	1SNK900103R0000		20	5.20
4	**Terminal block markers**	Blank marker		White	MG-CPM 13 41791	1SNB041791R0612		1680	0.27
		Blank card			MC812	1SNK160000R0000		22	10.00
					MC812PA	1SNK169999R0000		20	14.00
		Universal wire markers holder		Grey	UMH	1SNK900611R0000		10	0.20

Complete list of accessories is indicated in the terminal block datasheet including end stops.
Some accessories such as jumper bars may modify the terminal block's ratings: Complete information available in the accessories section of the catalog.

8

1SNK161016S0201

Technical data valid for copper conductors only.

ZS16-PE screw clamp terminal blocks
Ground - 10 mm 0.394 in spacing

16 mm²	
4 AWG	

1SNK161019F0014

ZS16-PE

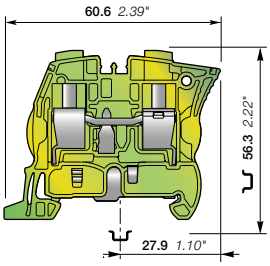

10 mm 0.394 in spacing

Description

Improve the safety of your installation in the event of a short-circuit thanks to our screwless rail contact:
- Rail contact non operator dependent,
- Performances above the requirements of IEC 60947-7-2 terminal block standard,
- Secured snap on or remove from the rail,
- PE.N function available by combining ZS16-PE with ZS16-BL and 2 poles jumper bar JB10-2.

Ordering details

Description		Color	Type	Part Number		Pkg qty	Weight (1 pce) g
Ground	Screwless rail connection	Green-yellow	ZS16-PE	1SNK510150R0000		20	32.00

Main technical data

Connecting capacity		IEC	UL - CSA
1 conductor per clamp	Rigid: Solid/Stranded	0.5 ... 16 mm²	24 ... 4 AWG
	Flexible without ferrule	0.5 ... 16 mm²	
	Flexible with non insulated ferrule	0.5 ... 16 mm²	24 ... 4 AWG
	Flexible with insulated ferrule	0.5 ... 10 mm²	24 ... 8 AWG
	Gauge	A6-B6	
Rated cross section		16 mm²	4 AWG
Rated short-time withstand current (1s)		1920 A	2544 A
Protection		IP20	NEMA 1
Explosive atmosphere classification		IM2 II 2 GD Ex eb I/II/IIIC – Class I, Zone 1, AEx e II, Ex e II U	

Mounting instructions

Rail	TH 35-7.5, TH 35-15
Wire stripping length	13.5 mm 0.531 in
Tool	Flat screwdriver Ø 5.5 mm Ø 0.217 in
Torque	1.8 Nm ± 0.2 15.9 lb.in ± 1.77

The connecting capacity data for one Rigid: Solid/Stranded, or one Flexible conductor (when applicable) is a mandatory information required by IEC, UL and CSA standards (Copper conductors). All other data are provided as supplementary information only. For more details, please consult our CB, UL or CSA certificates and technical datasheet available on http://www.TE.com

CE, CB, RoHS, USR CNR, CSA, EAC Ex, ATEX, IECEx, BR-Ex e II, Haz Loc, BV, DNV, Rina

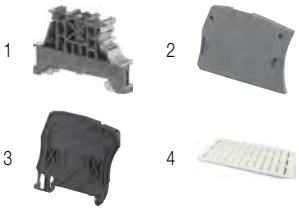

Accessories

	Description			Color	Type	Part Number		Pkg qty	Weight (1 pce) g
1	**End stops**	10 mm	0.394 in	Dark grey	BAM4	1SNK900001R0000		50	14.00
2	**End sections**	2.2 mm	0.087 in	Dark grey	ES4	1SNK505910R0000		20	2.20
3	**Circuit separators**	3 mm	0.118 in	Dark grey	CS-R1	1SNK900103R0000		20	5.20
4	**Terminal block markers**	Blank marker		White	MG-CPM 13 41791	1SNB041791R0612		1680	0.27
		Blank card			MC812	1SNK160000R0000		22	10.00
					MC812PA	1SNK169999R0000		20	14.00
		Universal wire markers holder		Grey	UMH	1SNK900611R0000		10	0.20

Complete list of accessories is indicated in the terminal block datasheet including end stops.
Some accessories such as jumper bars may modify the terminal block's ratings: Complete information available in the accessories section of the catalog.

1SNK161018S0201

Technical data valid for copper conductors only.

ZS25-PE screw clamp terminal blocks
Ground - 12 mm 0.472 in spacing

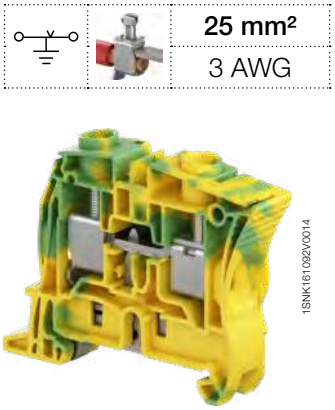

25 mm²	
3 AWG	

1SNK161092V0014

ZS25-PE

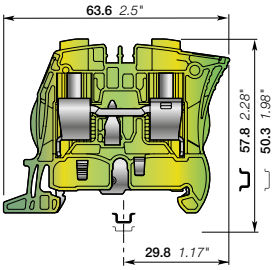

12 mm 0.472 in spacing

Description

Improve the safety of your installation in the event of a short-circuit thanks to our screwless rail contact:
- rail contact non operator dependent, secured snap on or off the rail,
- Same profile as ZS25 for aligned marking and identical end section.

Ordering details

Description		Color	Type	Part Number		Pkg qty	Weight (1 pce) g
Ground	Screwless rail connection	Green-yellow	ZS25-PE	1SNK512150R0000		20	38.00

Main technical data

Connecting capacity		IEC	UL - CSA
1 conductor per clamp	Rigid: Solid/Stranded	0.5 ... 25 mm²	24 ... 3 AWG
	Flexible without ferrule	0.5 ... 25 mm²	
	Flexible with non insulated ferrule	0.5 ... 16 mm²	24 ... 4 AWG
	Flexible with insulated ferrule	0.5 ... 16 mm²	24 ... 8 AWG
	Gauge	A6-B6	
Rated cross section		16 mm²	3 AWG
Maximum cross section		25 mm²	
Rated short-time withstand current (1s)		1920 A	3204 A
Maximum short-time withstand current (1s)		3000 A	
Protection		IP20	NEMA 1
Explosive atmosphere classification		IM2 II 2 GD Ex eb I/II/IIIC – Class I, Zone 1, AEx e II, Ex e II U	

Mounting instructions

Rail	TH 35-7.5, TH 35-15
Wire stripping length	13.5 mm 0.531 in
Tool	Flat screwdriver Ø 5.5 mm Ø 0.217 in
Torque	1.8 Nm ± 0.2 15.9 lb.in ± 1.77

The connecting capacity data for one Rigid: Solid/Stranded, or one Flexible conductor (when applicable) is a mandatory information required by IEC, UL and CSA standards (Copper conductors). All other data are provided as supplementary information only. For more details, please consult our CB, UL or CSA certificates and technical datasheet available on http://www.TE.com

CE, CB, RoHS, USR CNR, CSA, EAC Ex, ATEX, IECEx, BR-Ex e II, Haz Loc, BV, DNV

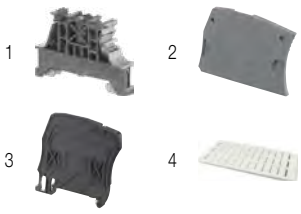

Accessories

	Description			Color	Type	Part Number		Pkg qty	Weight (1 pce) g
1	**End stops**	10 mm	0.394 in	Dark grey	BAM4	1SNK900001R0000		50	14.00
2	**End sections**	2.2 mm	0.087 in	Dark grey	ES4	1SNK505910R0000		20	2.20
3	**Circuit separators**	3 mm	0.118 in	Dark grey	CS-R1	1SNK900103R0000		20	5.20
4	**Terminal block markers**	Blank marker		White	MG-CPM 13 41791	1SNB041791R0612		1680	0.27
		Blank card			MC812	1SNK160000R0000		22	10.00
					MC812PA	1SNK169999R0000		20	14.00
		Universal wire markers holder		Grey	UMH	1SNK900611R0000		10	0.20

Complete list of accessories is indicated in the terminal block datasheet including end stops.
Some accessories such as jumper bars may modify the terminal block's ratings: Complete information available in the accessories section of the catalog.

8

1SNK161082S0201

Technical data valid for copper conductors only.

ZS35-PE screw clamp terminal blocks
Ground - 16 mm 0.630 in spacing

35 mm²
2 AWG

Description

Reliable electrical and mechanical contact with the rail that exceeds the requirements of IEC 60947-7-2 terminal block standard.

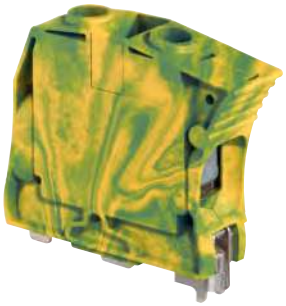

1SNK161005F0014

ZS35-PE

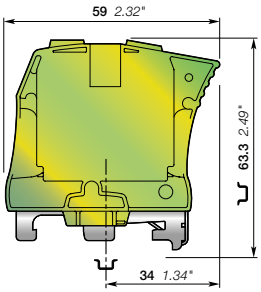

16 mm 0.630 in spacing

Ordering details

Description		Color	Type	Part Number		Pkg qty	Weight (1 pce) g
Ground	Screw rail connection	Green-yellow	ZS35-PE	1SNK516150R0000		20	81.80

Main technical data

Connecting capacity		IEC	UL - CSA
1 conductor per clamp	Rigid: Solid/Stranded	6 ... 35 mm²	10 ... 2 AWG
	Flexible without ferrule	6 ... 35 mm²	
	Flexible with non insulated ferrule	4 ... 35 mm²	10 ... 2 AWG
	Flexible with insulated ferrule	4 ... 35 mm²	10 ... 2 AWG
	Gauge	A9	
Rated cross section		35 mm²	2 AWG
Rated short-time withstand current (1s)		4200 A	4032 A
Protection		IP10	NEMA 1
Explosive atmosphere classification		IM2 II 2 GD Ex eb I/II/IIIC – Class I, Zone 1, AEx e II	

Mounting instructions

Rail		TH 35-7.5, TH 35-15
Wire stripping length		17 mm 0.669 in
Tool Screw clamp		Flat screwdriver Ø 6.5 mm Ø 0.256 in
Rail connection screw		Ø 5.5 Ø 0.217
Torque Screw clamp		2.65 Nm ± 0.15 23.4 lb.in ± 1.33
Rail connection screw		1.6 Nm ± 0.15 Nm 14.2 lb.in ± 1.33 lb.in

The connecting capacity data for one Rigid: Solid/Stranded, or one Flexible conductor (when applicable) is a mandatory information required by IEC, UL and CSA standards (Copper conductors). All other data are provided as supplementary information only. For more details, please consult our CB, UL or CSA certificates and technical datasheet available on http://www.TE.com

CE, CB, RoHS, USR, CSA, EAC Ex, ATEX, IECEx, BR-Ex e II, Haz Loc, BV, DNV, Rina

Accessories

	Description			Color	Type	Part Number		Pkg qty	Weight (1 pce) g
1	**End stops**	10 mm	0.394 in	Dark grey	BAZH1	1SNK900102R0000		20	24.00
2	**Circuit separators**	3 mm	0.118 in	Dark grey	CS-R1	1SNK900103R0000		20	5.20
3	**Terminal block markers**	Blank marker		White	MG-CPM 13 41791	1SNB041791R0612		1680	0.27
		Blank card			MC812	1SNK160000R0000		22	10.00
					MC812PA	1SNK169999R0000		20	14.00
		Universal wire markers holder		Grey	UMH	1SNK900611R0000		10	0.20

Complete list of accessories is indicated in the terminal block datasheet including end stops.
Some accessories such as jumper bars may modify the terminal block's ratings: Complete information available in the accessories section of the catalog.

1SNK161020S0201

Technical data valid for copper conductors only.

ZS35-PEN screw clamp terminal blocks

Ground + neutral - 32 mm 1.260 in spacing

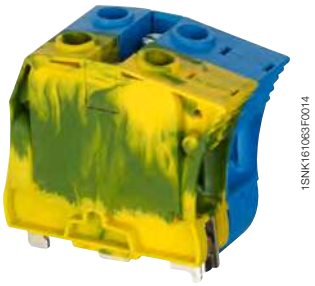

ZS35-PEN

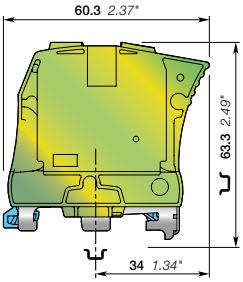

32 mm 1.260 in spacing

Description

Simplify your PE.N connection with ZS35-PE block connected to ZS35-BL through a pre-mounted jumper.

Ordering details

Description	Color	Type	Part Number		Pkg qty	Weight (1 pce) g
Ground + neutral	Green-yellow	ZS35-PEN	1SNK516170R0000		10	236.00

Main technical data

Connecting capacity		IEC	UL - CSA
1 conductor per clamp	Rigid: Solid/Stranded	6 ... 35 mm²	
	Flexible without ferrule	6 ... 35 mm²	
	Flexible with non insulated ferrule	6 ... 35 mm²	10 ... 2 AWG
	Flexible with insulated ferrule	6 ... 35 mm²	
	Gauge	A9	
Rated cross section		35 mm²	
Rated short-time withstand current (1s)		4200 A	
Protection		IP10	NEMA 1

Mounting instructions

Rail	TH 35-7.5, TH 35-15
Wire stripping length	17 mm 0.669 in
Tool Screw clamp	Flat screwdriver Ø 6.5 mm Ø 0.256 in
Rail connection screw	Ø 5.5 Ø 0.217
Torque Screw clamp	2.65 Nm ± 0.15 23.5 lb.in ± 1.33
Rail connection screw	1.6 Nm ± 0.15 Nm 14.2 lb.in ± 1.33 lb.in

The connecting capacity data for one Rigid: Solid/Stranded, or one Flexible conductor (when applicable) is a mandatory information required by IEC, UL and CSA standards (Copper conductors). All other data are provided as supplementary information only. For more details, please consult our CB, UL or CSA certificates and technical datasheet available on http://www.TE.com

CE RoHS EAC

Accessories

	Description			Color	Type	Part Number		Pkg qty	Weight (1 pce) g
1	End stops	10 mm	0.394 in	Dark grey	BAZH1	1SNK900102R0000		20	24.00
2	Terminal block markers	Blank marker		White	MG-CPM 13 41791	1SNB041791R0612		1680	0.27
		Blank card			MC812	1SNK160000R0000		22	10.00
					MC812PA	1SNK169999R0000		20	14.00
		Universal wire markers holder		Grey	UMH	1SNK900611R0000		10	0.20

Complete list of accessories is indicated in the terminal block datasheet including end stops.
Some accessories such as jumper bars may modify the terminal block's ratings: Complete information available in the accessories section of the catalog.

1SNK161047S0201

Technical data valid for copper conductors only.

ZS50-PE screw clamp terminal blocks
Ground - 16 mm 0.630 in spacing

50 mm²
0 AWG

1SNK161093V0014

ZS50-PE

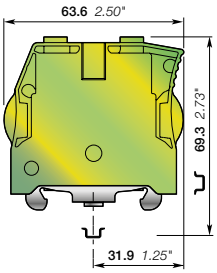

16 mm 0.630 in spacing

Description

– Reliable electrical and mechanical contact with the rail that exceeds the requirements of the IEC 60947-7-2 terminal block standard.

Ordering details

Description		Color	Type	Part Number		Pkg qty	Weight (1 pce) g
Ground	Screw rail connection	Green-yellow	ZS50-PE	1SNK516151R0000		20	83.00

Main technical data

Connecting capacity		IEC	UL - CSA
1 conductor per clamp	Rigid: Solid/Stranded	1 … 50 mm²	18 … 0 AWG
	Flexible without ferrule	1 … 50 mm²	
	Flexible with non insulated ferrule	1 … 50 mm²	18 … 0 AWG
	Flexible with insulated ferrule	1 … 50 mm²	18 … 0 AWG
	Gauge	Dia.11	
Rated cross section		50 mm²	0 AWG
Rated short-time withstand current (1s)		6000 A	6420 A
Protection		IP10	NEMA 1
Explosive atmosphere classification		IM2 II 2 GD Ex eb I/II/IIIC – Class I, Zone 1, AEx e II	

Mounting instructions

Rail		TH 35-7.5, TH 35-15
Wire stripping length		17 mm 0.669 in
Tool Screw clamp		Flat screwdriver Ø 6.5 mm Ø 0.256 in
Rail connection screw		Ø 6.5 Ø 0.256
Torque Screw clamp		3 Nm ± 0.50 26.6 lb.in ± 4.43
Rail connection screw		3 Nm ± 0.25 Nm 26.553 lb.in ± 2.21 lb.in

The connecting capacity data for one Rigid: Solid/Stranded, or one Flexible conductor (when applicable) is a mandatory information required by IEC, UL and CSA standards (Copper conductors). All other data are provided as supplementary information only. For more details, please consult our CB, UL or CSA certificates and technical datasheet available on http://www.TE.com

CE, CB, RoHS, USR, CSA, EAC Ex, ATEX, IECEx, BR-Ex e II, Haz Loc, BV, DNV

1

2

Accessories

	Description			Color	Type	Part Number		Pkg qty	Weight (1 pce) g
1	**End stops**	10 mm	0.394 in	Dark grey	BAZH1	1SNK900102R0000		20	24.00
2	**Terminal block markers**	Blank marker		White	MG-CPM 13 41791	1SNB041791R0612		1680	0.27
		Blank card			MC812	1SNK160000R0000		22	10.00
					MC812PA	1SNK169999R0000		20	14.00
		Universal wire markers holder		Grey	UMH	1SNK900611R0000		10	0.20

Complete list of accessories is indicated in the terminal block datasheet including end stops.
Some accessories such as jumper bars may modify the terminal block's ratings: Complete information available in the accessories section of the catalog.

1SNK161070S0201

Technical data valid for copper conductors only.

ZS70-PE screw clamp terminal blocks
Ground - 22 mm 0.866 in spacing

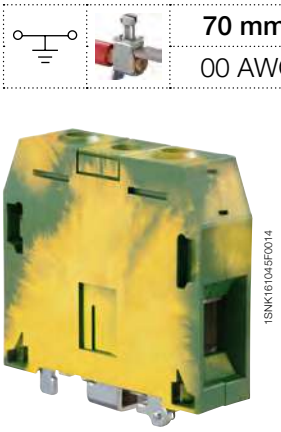

ZS70-PE

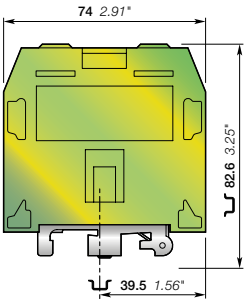

22 mm 0.866 in spacing

		70 mm²
		00 AWG

Description

Reliable electrical and mechanical contact with the rail that exceeds the requirements of IEC 60947-7-2 terminal block standard.

Ordering details

Description		Color	Type	Part Number		Pkg qty	Weight (1 pce) g
Ground	Screw rail connection	Green-yellow	ZS70-PE	1SNK522150R0000		10	222.00

Main technical data

Connecting capacity		IEC	UL - CSA
1 conductor per clamp	Rigid: Solid/Stranded	16 ... 95 mm²	4 ... 00 AWG
	Flexible without ferrule	16 ... 70 mm²	
	Flexible with non insulated ferrule	16 ... 50 mm²	
	Flexible with insulated ferrule	16 ... 50 mm²	
	Gauge	B11	
Rated cross section		70 mm²	00 AWG
Rated short-time withstand current (1s)		8400 A	8088 A
Protection		IP10	NEMA 1
Explosive atmosphere classification		IM2 II 2 GD Ex eb I/II/IIIC – Class I, Zone 1, AEx e II, Ex e II U	

Mounting instructions

Rail		TH 35-15
Wire stripping length		25 mm 0.984 in
Tool Screw clamp		Allen key Ø 6 mm Ø 0.236 in
Rail connection screw		Ø 4 Ø 0.158
Torque Screw clamp		6.5 Nm ± 0.5 57.5 lb.in ± 4.43
Rail connection screw		1.9 Nm ± 0.1 Nm 16.82 lb.in ± 0.885 lb.in

The connecting capacity data for one Rigid: Solid/Stranded, or one Flexible conductor (when applicable) is a mandatory information required by IEC, UL and CSA standards (Copper conductors). All other data are provided as supplementary information only. For more details, please consult our CB, UL or CSA certificates and technical datasheet available on http://www.TE.com

CE, CB, RoHS, USR CNR, CSA, EAC Ex, ATEX, IECEx, BR-Ex e II, Haz Loc, BV, DNV, Rina

Accessories

	Description			Color	Type	Part Number		Pkg qty	Weight (1 pce) g
1	**End stops**	10 mm	0.394 in	Dark grey	BAZH1	1SNK900102R0000		20	24.00
2	**Terminal block markers**	Blank marker		White	MG-CPM 13 41791	1SNB041791R0612		1680	0.27
		Blank card			MC812	1SNK160000R0000		22	10.00
					MC812PA	1SNK169999R0000		20	14.00
		Universal wire markers holder		Grey	UMH	1SNK900611R0000		10	0.20

Complete list of accessories is indicated in the terminal block datasheet including end stops.
Some accessories such as jumper bars may modify the terminal block's ratings: Complete information available in the accessories section of the catalog.

8

1SNK161022S0201

Technical data valid for copper conductors only.

ZS95-PE screw clamp terminal blocks
Ground - 26 mm 1.024 in spacing

95 mm²
0000 AWG

Description

Reliable electrical and mechanical contact with the rail that exceeds the requirements of IEC 60947-7-2 terminal block standard.

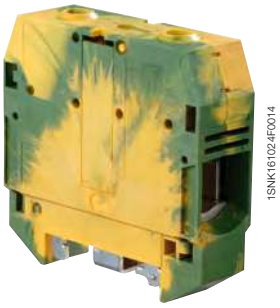

ZS95-PE

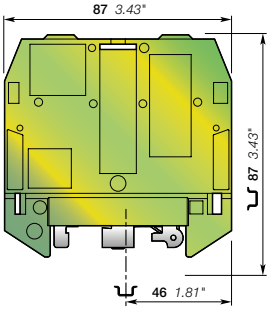

26 mm 1.024 in spacing

Ordering details

Description		Color	Type	Part Number		Pkg qty	Weight (1 pce) g
Ground	Screw rail connection	Green-yellow	ZS95-PE	1SNK526150R0000		10	278.00

Main technical data

Connecting capacity		IEC	UL - CSA
1 conductor per clamp	Rigid: Solid/Stranded	35 ... 120 mm²	2 ... 0000 AWG
	Flexible without ferrule	35 ... 95 mm²	
	Flexible with non insulated ferrule	35 ... 50 mm²	
	Flexible with insulated ferrule	35 ... 50 mm²	
	Gauge	B12	
Rated cross section		95 mm²	0000 AWG
Rated short-time withstand current (1s)		11400 A	12840 A
Protection		IP10	NEMA 1
Explosive atmosphere classification		IM2 II 2 GD Ex eb I/II/IIIC – Class I, Zone 1, AEx e II, Ex e II U	

The connecting capacity data for one Rigid: Solid/Stranded, or one Flexible conductor (when applicable) is a mandatory information required by IEC, UL and CSA standards (Copper conductors). All other data are provided as supplementary information only. For more details, please consult our CB, UL or CSA certificates and technical datasheet available on http://www.TE.com

CE, CB, RoHS, USR CNR, CSA, EAC Ex, ATEX, IECEx, BR-Ex e II, Haz Loc, BV, DNV, Rina

Mounting instructions

Rail	TH 35-15
Wire stripping length	26 mm 1.024 in
Tool Screw clamp	Allen key Ø 6 mm Ø 0.236 in
Rail connection screw	Ø 4 Ø 0.158
Torque Screw clamp	9.25 Nm ± 0.25 81.7 lb.in ± 2.2
Rail connection screw	1.9 Nm ± 0.1 Nm 16.82 lb.in ± 0.885 lb.in

1

2

Accessories

	Description			Color	Type	Part Number		Pkg qty	Weight (1 pce) g
1	**End stops**	10 mm	0.394 in	Dark grey	BAZH1	1SNK900102R0000		20	24.00
2	**Terminal block markers**	Blank marker		White	MG-CPM 13 41791	1SNB041791R0612		1680	0.27
		Blank card			MC812	1SNK160000R0000		22	10.00
					MC812PA	1SNK169999R0000		20	14.00
		Universal wire markers holder		Grey	UMH	1SNK900611R0000		10	0.20

Complete list of accessories is indicated in the terminal block datasheet including end stops.
Some accessories such as jumper bars may modify the terminal block's ratings: Complete information available in the accessories section of the catalog.

1SNK161024S0201

Technical data valid for copper conductors only.

ZS4-S screw clamp terminal blocks

Disconnect with blade - 5.2 mm 0.205 in spacing

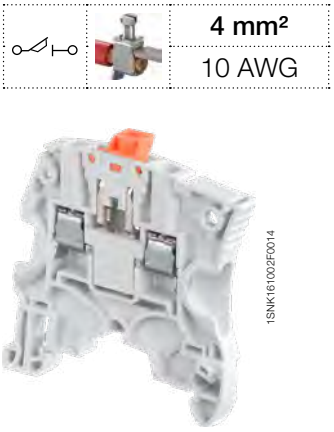

4 mm²	
10 AWG	

1SNK161002F0014

ZS4-S

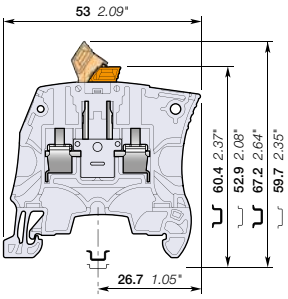

5.2 mm 0.205 in spacing

Description

- Ease your disconnect operations with the disconnect blade operated by hand or with a screwdriver,
- Same profile as ZS4 feed-through terminal block for aligned marking and identical end section use.

Ordering details

Description		Color	Type	Part Number		Pkg qty	Weight (1 pce) g
Disconnect	Profile aligned with ZS4	Grey	ZS4-S	1SNK505310R0000		50	8.60
		Blue	ZS4-S-BL	1SNK505320R0000		50	8.60
		Orange	ZS4-S-OR	1SNK505330R0000		50	8.60

Main technical data

Connecting capacity		IEC	UL - CSA
1 conductor per clamp	Rigid: Solid/Stranded	0.2 ... 4 mm²	24 ... 10 AWG
	Flexible without ferrule	0.2 ... 4 mm²	
	Flexible with non insulated ferrule	0.22 ... 4 mm²	24 ... 10 AWG
	Flexible with insulated ferrule	0.22 ... 2.5 mm²	24 ... 14 AWG
	Gauge	A3-B3	
2 conductors per clamp	Rigid: Solid/Stranded	0.2 ... 1.5 mm²	24 ... 16 AWG
	Flexible without ferrule	0.2 ... 1.5 mm²	
	Flexible with twin ferrule	0.22 ... 1.5 mm²	24 ... 16 AWG
Rated current / Rated cross section		25 A / 4 mm²	25 A / 10 AWG
Rated short-time withstand current (1s)		480 A	
Rated voltage		400 V	150 V
Impulse withstand voltage		6000 V	
Protection		IP20	NEMA 1

Mounting instructions

Rail	TH 35-7.5, TH 35-15
Wire stripping length	10.5 mm 0.412 in
Tool	Flat screwdriver Ø 3.5 mm Ø 0.138 in
Torque	0.6 Nm ± 0.1 5.31 lb.in ± 0.885

Recommendation for best usage: in horizontal assemblies, disconnect terminal blocks should be mounted with fixed foot on top (power side) so that the disconnect knife does not partially close through gravity. Furthermore, as specified per IEC 60947-7-1, disconnect terminal blocks are intended to be used for temporary disconnection at zero potential and at no load.

The connecting capacity data for one Rigid: Solid/Stranded, or one Flexible conductor (when applicable) is a mandatory information required by IEC, UL and CSA standards (Copper conductors). All other data are provided as supplementary information only. For more details, please consult our CB, UL or CSA certificates and technical datasheet available on http://www.TE.com

CE, CB, RoHS, USR CNR, CSA, EAC, BV, DNV, Rina

Accessories

	Description			Color	Type	Part Number		Pkg qty	Weight (1 pce) g
1	**End stops**	10 mm	0.394 in	Dark grey	BAM4	1SNK900001R0000		50	14.00
2	**End sections**	2.2 mm	0.087 in	Dark grey	ES4	1SNK505910R0000		20	2.20
3	**Lateral jumper bars**	2 poles	30 A (IEC)	Grey	PC5-2	1SNA113542R1000		10	1.80
		10 poles	30 A (IEC)		PC5-10	1SNA113544R1200		10	6.00
4	**Circuit separators**	3 mm	0.118 in	Dark grey	CS-R1	1SNK900103R0000		20	5.20
5	**Shield connectors**				SHBS	1SNK900600R0000		20	3.50
6	**Protecting covers**	5.2 mm 0.205 in spacing		Transparent	PL5	1SNK900618R0000		10	1.50
7	**Terminal block markers**	Blank marker		White	MG-CPM 13 41790	1SNB041790R0512		1960	0.23
		Blank card			MC512	1SNK140000R0000		22	9.00
					MC512PA	1SNK149999R0000		20	10.00
		Universal wire markers holder		Grey	UMH	1SNK900611R0000		10	0.20

Complete list of accessories is indicated in the terminal block datasheet including end stops.
Some accessories such as jumper bars may modify the terminal block's ratings: Complete information available in the accessories section of the catalog.

8

1SNK161010S0201

Technical data valid for copper conductors only.

ZS4-S-T screw clamp terminal blocks

Disconnect with blade - with test socket - 5.2 mm 0.205 in spacing

4 mm²
10 AWG

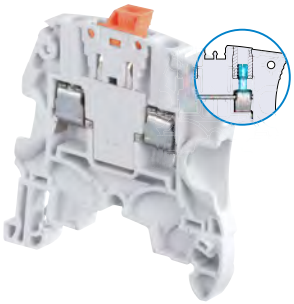

ZS4-S-T

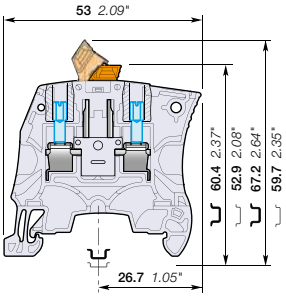

5.2 mm 0.205 in spacing

Description

- Ease your test operations with the 2 built-in test sockets,
- Screwdriver or hand operated disconnect blade,
- Same profile as ZS4 feed-through terminal block for aligned marking and identical end section use.

Ordering details

Description		Color	Type	Part Number		Pkg qty	Weight (1 pce) g
Disconnect	Profile aligned with ZS4, with 2 test sockets DIA 2 mm 0.079 in	Grey	ZS4-S-T2	1SNK505311R0000		50	8.90
		Blue	ZS4-S-T2-BL	1SNK505321R0000		50	8.90
		Orange	ZS4-S-T2-OR	1SNK505331R0000		50	8.90
	Profile aligned with ZS4, with 2 test sockets DIA 2.3 mm 0.091 in	Grey	ZS4-S-T2.3	1SNK505312R0000		50	8.80

Main technical data

Connecting capacity		IEC	UL - CSA
1 conductor per clamp	Rigid: Solid/Stranded	0.2 ... 4 mm²	24 ... 10 AWG
	Flexible without ferrule	0.22 ... 4 mm²	
	Flexible with non insulated ferrule	0.22 ... 4 mm²	24 ... 10 AWG
	Flexible with insulated ferrule	0.22 ... 2.5 mm²	24 ... 14 AWG
	Gauge	A3-B3	
2 conductors per clamp	Rigid: Solid/Stranded	0.2 ... 1.5 mm²	24 ... 16 AWG
	Flexible without ferrule	0.2 ... 1.5 mm²	
	Flexible with twin ferrule	0.22 ... 1.5 mm²	24 ... 16 AWG
Rated current / Rated cross section		25 A / 4 mm²	25 A / 10 AWG
Rated short-time withstand current (1s)		480 A	
Rated voltage		400 V	150 V
Impulse withstand voltage		6000 V	
Protection		IP20	NEMA 1

Mounting instructions

Rail		TH 35-7.5, TH 35-15
Wire stripping length		10.5 mm 0.412 in
Tool		Flat screwdriver Ø 3.5 mm Ø 0.138 in
Torque		0.6 Nm ± 0.1 5.31 lb.in ± 0.885

Recommendation for best usage: in horizontal assemblies, disconnect terminal blocks should be mounted with fixed foot on top (power side) so that the disconnect knife does not partially close through gravity. Furthermore, as specified per IEC 60947-7-1, disconnect terminal blocks are intended to be used for temporary disconnection at zero potential and at no load.

The connecting capacity data for one Rigid: Solid/Stranded, or one Flexible conductor (when applicable) is a mandatory information required by IEC, UL and CSA standards (Copper conductors). All other data are provided as supplementary information only. For more details, please consult our CB, UL or CSA certificates and technical datasheet available on http://www.TE.com

CE RoHS USR CNR CSA EAC

Accessories

	Description			Color	Type	Part Number		Pkg qty	Weight (1 pce) g
1	**End stops**	10 mm	0.394 in	Dark grey	BAM4	1SNK900001R0000		50	14.00
2	**End sections**	2.2 mm	0.087 in	Dark grey	ES4	1SNK505910R0000		20	2.20
3	**Lateral jumper bars**	2 poles	30 A (IEC)	Grey	PC5-2	1SNA113542R1000		10	1.80
		10 poles	30 A (IEC)		PC5-10	1SNA113544R1200		10	6.00
4	**Circuit separators**	3 mm	0.118 in	Dark grey	CS-R1	1SNK900103R0000		20	5.20
5	**Shield connectors**				SHBS	1SNK900600R0000		20	3.50
6	**Protecting covers**	5.2 mm 0.205 in spacing		Transparent	PL5	1SNK900618R0000		10	1.50
7	**Terminal block markers**	Blank marker		White	MG-CPM 13 41790	1SNB041790R0512		1960	0.23
		Blank card			MC512	1SNK140000R0000		22	9.00
					MC512PA	1SNK149999R0000		20	10.00
		Universal wire markers holder		Grey	UMH	1SNK900611R0000		10	0.20

Complete list of accessories is indicated in the terminal block datasheet including end stops.
Some accessories such as jumper bars may modify the terminal block's ratings: Complete information available in the accessories section of the catalog.

1SNK161042S0201

Technical data valid for copper conductors only.

ZS4-S-R1 screw clamp terminal blocks

Disconnect with blade - 6 mm 0.236 in spacing

4 mm²	
10 AWG	

1SNK161003F0014

ZS4-S-R1

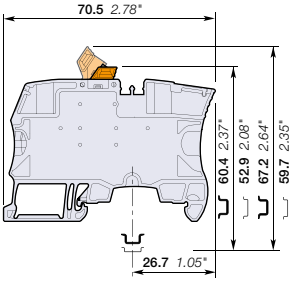

6 mm 0.236 in spacing

Description

- Simplify the alternated distribution thanks to the two jumper channels aligned with ZS4 feed-through terminal blocks,
- Ease your disconnect operations with the disconnect blade operated by hand or with a screwdriver.

Ordering details

Description		Color	Type	Part Number		Pkg qty	Weight (1 pce) g
Disconnect	Profile aligned with ZS4-SF	Grey	ZS4-S-R1	1SNK506310R0000		50	13.20
		Blue	ZS4-S-R1-BL	1SNK506320R0000		50	13.20
		Orange	ZS4-S-R1-OR	1SNK506330R0000		50	13.20

Main technical data

Connecting capacity		IEC	UL - CSA
1 conductor per clamp	Rigid: Solid/Stranded	0.2 ... 4 mm²	24 ... 10 AWG
	Flexible without ferrule	0.22 ... 4 mm²	
	Flexible with non insulated ferrule	0.22 ... 4 mm²	24 ... 12 AWG
	Flexible with insulated ferrule	0.22 ... 4 mm²	24 ... 12 AWG
	Gauge	A3-B3	
2 conductors per clamp	Rigid: Solid/Stranded	0.2 ... 1.5 mm²	24 ... 16 AWG
	Flexible without ferrule	0.2 ... 1.5 mm²	
	Flexible with twin ferrule	0.22 ... 1.5 mm²	24 ... 16 AWG
Rated current / Rated cross section		26 A / 4 mm²	26 A / 10 AWG
Rated short-time withstand current (1s)		480 A	
Rated voltage		400 V	150 V
Impulse withstand voltage		6000 V	
Protection		IP20	NEMA 1

Mounting instructions

Rail		TH 35-7.5, TH 35-15
Wire stripping length		10.5 mm 0.412 in
Tool		Flat screwdriver Ø 3.5 mm Ø 0.138 in
Torque		0.6 Nm ± 0.1 5.31 lb.in ± 0.885

Recommendation for best usage: in horizontal assemblies, disconnect terminal blocks should be mounted with fixed foot on top (power side) so that the disconnect knife does not partially close through gravity. Furthermore, as specified per IEC 60947-7-1, disconnect terminal blocks are intended to be used for temporary disconnection at zero potential and at no load.

The connecting capacity data for one Rigid: Solid/Stranded, or one Flexible conductor (when applicable) is a mandatory information required by IEC, UL and CSA standards (Copper conductors). All other data are provided as supplementary information only. For more details, please consult our CB, UL or CSA certificates and technical datasheet available on http://www.TE.com

CE | CB | RoHS | USR CNR | CSA | EAC | BV | DNV | Rina

Accessories

	Description			Color	Type	Part Number		Pkg qty	Weight (1 pce) g
1	**End stops**	10 mm	0.394 in	Dark grey	BAM4	1SNK900001R0000		50	14.00
2	**Jumper bars**	2 poles	41 A (IEC)	Orange	JB6-2	1SNK906302R0000		50	1.30
		3 poles	41 A (IEC)		JB6-3	1SNK906303R0000		50	2.10
		4 poles	41 A (IEC)		JB6-4	1SNK906304R0000		50	2.90
		5 poles	41 A (IEC)		JB6-5	1SNK906305R0000		50	3.60
		10 poles	41 A (IEC)		JB6-10	1SNK906310R0000		20	7.40
3	**Test adapters**	For test plugs DIA 2 mm 0.079 in		Dark grey	TP2	1SNK900203R0000		20	1.70
		For test plugs DIA 4 mm 0.157 in			TP4	1SNK900205R0000		20	2.40
4	**Test connectors**	End module, 5.2 mm 0.205 in		Dark grey	TC5-R1	1SNK900201R0000		10	5.20
5	**Spacers**	0.8 mm	0.031 in	Dark grey	ES-TC6	1SNK900105R0000		10	0.80
6	**Terminal block markers**	Blank marker		White	MG-CPM 13 41791	1SNB041791R0612		1680	0.27
		Blank card			MC612	1SNK150000R0000		22	10.00
					MC612PA	1SNK159999R0000		20	11.00
		Universal wire markers holder		Grey	UMH	1SNK900611R0000		10	0.20

Complete list of accessories is indicated in the terminal block datasheet including end stops.
Some accessories such as jumper bars may modify the terminal block's ratings: Complete information available in the accessories section of the catalog.

8

1SNK161012S0201

Technical data valid for copper conductors only.

ZS4-S-T-R1 screw clamp terminal blocks

Disconnect with blade - with test socket - 6 mm 0.236 in spacing

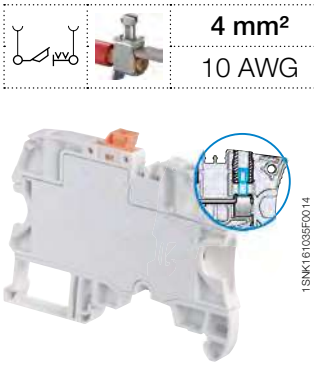

ZS4-S-T-R1

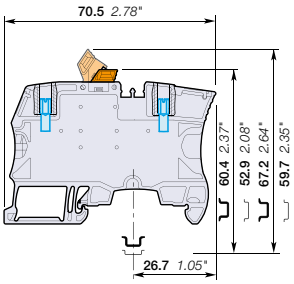

6 mm 0.236 in spacing

4 mm²
10 AWG

Description

- Ease your test operations with the 2 built-in test sockets,
- Screwdriver or hand operated disconnect blade,
- Simplify the alternated distribution thanks to the two jumper channels aligned with ZS4 feed-through terminal blocks.

Ordering details

Description		Color	Type	Part Number		Pkg qty	Weight (1 pce) g
Disconnect	Profile aligned with ZS4-SF, with 2 test sockets DIA 2 mm 0.079 in	Grey	ZS4-S-T2-R1	1SNK506311R0000		50	14.20
		Blue	ZS4-S-T2-R1-BL	1SNK506321R0000		50	14.20
		Orange	ZS4-S-T2-R1-OR	1SNK506331R0000		50	14.20
	Profile aligned with ZS4-SF, with 2 test sockets DIA 2.3 mm 0.091 in	Grey	ZS4-S-T2.3-R1	1SNK506312R0000		50	14.20

Main technical data

Connecting capacity		IEC	UL - CSA
1 conductor per clamp	Rigid: Solid/Stranded	0.2 ... 4 mm²	24 ... 10 AWG
	Flexible without ferrule	0.22 ... 4 mm²	
	Flexible with non insulated ferrule	0.22 ... 4 mm²	24 ... 12 AWG
	Flexible with insulated ferrule	0.22 ... 4 mm²	24 ... 12 AWG
	Gauge	A3-B3	
2 conductors per clamp	Rigid: Solid/Stranded	0.2 ... 1.5 mm²	24 ... 16 AWG
	Flexible without ferrule	0.2 ... 1.5 mm²	
	Flexible with twin ferrule	0.22 ... 1.5 mm²	24 ... 16 AWG
Rated current / Rated cross section		26 A / 4 mm²	26 A / 10 AWG
Rated short-time withstand current (1s)		480 A	
Rated voltage		400 V	150 V
Impulse withstand voltage		6000 V	
Protection		IP20	NEMA 1

Mounting instructions

Rail	TH 35-7.5, TH 35-15
Wire stripping length	10.5 mm 0.412 in
Tool	Flat screwdriver Ø 3.5 mm Ø 0.138 in
Torque	0.6 Nm ± 0.1 5.31 lb.in ± 0.885

Recommendation for best usage: in horizontal assemblies, disconnect terminal blocks should be mounted with fixed foot on top (power side) so that the disconnect knife does not partially close through gravity. Furthermore, as specified per IEC 60947-7-1, disconnect terminal blocks are intended to be used for temporary disconnection at zero potential and at no load.

The connecting capacity data for one Rigid: Solid/Stranded, or one Flexible conductor (when applicable) is a mandatory information required by IEC, UL and CSA standards (Copper conductors). All other data are provided as supplementary information only. For more details, please consult our CB, UL or CSA certificates and technical datasheet available on http://www.TE.com

CE, CB, RoHS, USR CNR, CSA, EAC, BV, DNV, Rina

Accessories

	Description			Color	Type	Part Number		Pkg qty	Weight (1 pce) g
1	**End stops**	10 mm	0.394 in	Dark grey	BAM4	1SNK900001R0000		50	14.00
2	**Jumper bars**	2 poles	41 A (IEC)	Orange	JB6-2	1SNK906302R0000		50	1.30
		3 poles	41 A (IEC)		JB6-3	1SNK906303R0000		50	2.10
		4 poles	41 A (IEC)		JB6-4	1SNK906304R0000		50	2.90
		5 poles	41 A (IEC)		JB6-5	1SNK906305R0000		50	3.60
		10 poles	41 A (IEC)		JB6-10	1SNK906310R0000		20	7.40
3	**Test connectors**	End module, 5.2 mm 0.205 in		Dark grey	TC5-R1	1SNK900201R0000		10	5.20
4	**Spacers**	0.8 mm	0.031 in	Dark grey	ES-TC6	1SNK900105R0000		10	0.80
5	**Terminal block markers**	Blank marker		White	MG-CPM 13 41791	1SNB041791R0612		1680	0.27
		Blank card			MC612	1SNK150000R0000		22	10.00
					MC612PA	1SNK159999R0000		20	11.00
		Universal wire markers holder		Grey	UMH	1SNK900611R0000		10	0.20

Complete list of accessories is indicated in the terminal block datasheet including end stops.
Some accessories such as jumper bars may modify the terminal block's ratings: Complete information available in the accessories section of the catalog.

1SNK161045S0201

Technical data valid for copper conductors only.

ZS6-S screw clamp terminal blocks

Disconnect with blade - 6 mm 0.236 in spacing

6 mm²
10 AWG

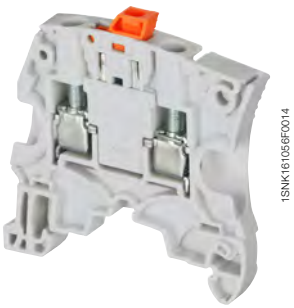

ZS6-S

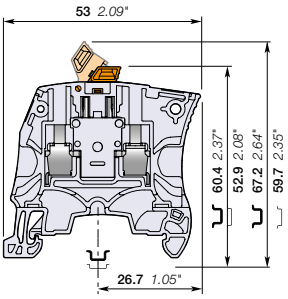

6 mm 0.236 in spacing

Description

- Ease your disconnect operations with the disconnect blade operated by hand or with a screwdriver,
- Same profile as ZS6 feed-through terminal block for aligned marking and identical end section use.

Ordering details

Description		Color	Type	Part Number		Pkg qty	Weight (1 pce) g
Disconnect	Profile aligned with ZS6	Grey	ZS6-S	1SNK506315R0000		50	8.60
		Blue	ZS6-S-BL	1SNK506322R0000		50	8.60

Main technical data

Connecting capacity		IEC	UL - CSA
1 conductor per clamp	Rigid: Solid/Stranded	0.2 ... 6 mm²	24 ... 10 AWG
	Flexible without ferrule	0.22 ... 6 mm²	
	Flexible with non insulated ferrule	0.22 ... 6 mm²	24 ... 12 AWG
	Flexible with insulated ferrule	0.22 ... 4 mm²	24 ... 12 AWG
	Gauge	A4-B3	
2 conductors per clamp	Rigid: Solid/Stranded	0.2 ... 2.5 mm²	24 ... 14 AWG
	Flexible without ferrule	0.22 ... 2.5 mm²	
	Flexible with twin ferrule	0.22 ... 2.5 mm²	24 ... 14 AWG
Rated current / Rated cross section		25 A / 4 mm²	25 A / 10 AWG
Maximum current / Maximum cross section		30 A / 6 mm²	
Rated short-time withstand current (1s)		480 A	
Rated voltage		500 V	300 V
Impulse withstand voltage		6000 V	
Protection		IP20	NEMA 1

Mounting instructions

Rail		TH 35-7.5, TH 35-15
Wire stripping length		10.5 mm 0.412 in
Tool		Flat screwdriver Ø 4 mm Ø 0.157 in
Torque		0.85 Nm ± 0.15 7.52 lb.in ± 1.33

Recommendation for best usage: in horizontal assemblies, disconnect terminal blocks should be mounted with fixed foot on top (power side) so that the disconnect knife does not partially close through gravity. Furthermore, as specified per IEC 60947-7-1, disconnect terminal blocks are intended to be used for temporary disconnection at zero potential and at no load.

The connecting capacity data for one Rigid: Solid/Stranded, or one Flexible conductor (when applicable) is a mandatory information required by IEC, UL and CSA standards (Copper conductors). All other data are provided as supplementary information only. For more details, please consult our CB, UL or CSA certificates and technical datasheet available on http://www.TE.com

CE CB RoHS USR CSA EAC BV DNV

Accessories

	Description			Color	Type	Part Number		Pkg qty	Weight (1 pce) g
1	**End stops**	10 mm	0.394 in	Dark grey	BAM4	1SNK900001R0000		50	14.00
2	**End sections**	2.2 mm	0.087 in	Dark grey	ES4	1SNK505910R0000		20	2.20
3	**Circuit separators**	3 mm	0.118 in	Dark grey	CS-R1	1SNK900103R0000		20	5.20
4	**Shield connectors**				SHBS	1SNK900600R0000		20	3.50
5	**Protecting covers**	6 mm 0.236 in spacing		Transparent	PL6	1SNK900619R0000		10	1.80
6	**Terminal block markers**	Blank marker		White	MG-CPM 13 41791	1SNB041791R0612		1680	0.27
		Blank card			MC612	1SNK150000R0000		22	10.00
					MC612PA	1SNK159999R0000		20	11.00
		Universal wire markers holder		Grey	UMH	1SNK900611R0000		10	0.20

Complete list of accessories is indicated in the terminal block datasheet including end stops.
Some accessories such as jumper bars may modify the terminal block's ratings: Complete information available in the accessories section of the catalog.

8

1SNK161046S0201

Technical data valid for copper conductors only.

ZS6-S-4S-T screw clamp terminal blocks

Disconnect with blade - with test socket screws - 6 mm 0.236 in spacing

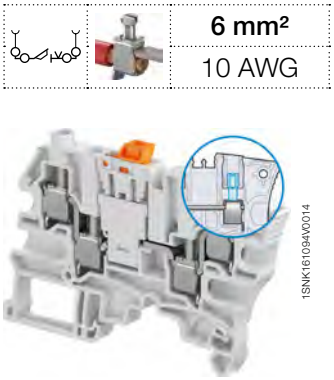

ZS6-S-4S-T

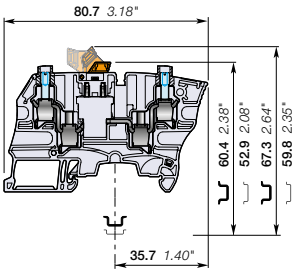

6 mm 0.236 in spacing

6 mm²
10 AWG

Description

- Recommended for energy markets and highly demanding applications requiring that only one conductor be connected per clamp,
- Ease your disconnect and test operations with the two built-in test socket screws,
- Simplify the alternated distribution thanks to the jumper channel.

Ordering details

Description		Color	Type	Part Number		Pkg qty	Weight (1 pce) g
Disconnect	with 2 test sockets DIA 2 mm 0,079 in	Grey	ZS6-S-4S-T2	1SNK506316R0000		50	18.40

Main technical data

Connecting capacity		IEC	UL - CSA
1 conductor per clamp	Rigid: Solid/Stranded	0.2 ... 6 mm²	24 ... 10 AWG
	Flexible without ferrule	0.22... 6 mm²	
	Flexible with non insulated ferrule	0.22 ... 4 mm²	24 ... 12 AWG
	Flexible with insulated ferrule	0.22 ... 4 mm²	24 ... 12 AWG
	Gauge	A4-B3	
2 conductors per clamp	Rigid: Solid/Stranded	0.2 ... 2.5 mm²	24 ... 14 AWG
	Flexible without ferrule	0.2 ... 2.5 mm²	
	Flexible with twin ferrule	0.22 ... 2.5 mm²	24 ... 14 AWG
Rated current / Rated cross section		27 A / 4 mm²	28 A / 10 AWG
Rated short-time withstand current (1s)		480 A	
Rated voltage		500 V	300 V
Impulse withstand voltage		6000 V	
Protection		IP20	NEMA 1

Mounting instructions

Rail	TH 35-7.5, TH 35-15
Wire stripping length	10.5 mm 0.413 in
Tool	Flat screwdriver Ø 4 mm Ø 0.157 in
Torque	0.85 Nm ± 0.15 7.52 lb.in ± 1.33

Recommendation for best usage: in horizontal assemblies, disconnect terminal blocks should be mounted with fixed foot on top (power side) so that the disconnect knife does not partially close through gravity. Furthermore, as specified per IEC 60947-7-1, disconnect terminal blocks are intended to be used for temporary disconnection at zero potential and at no load.

The connecting capacity data for one Rigid: Solid/Stranded, or one Flexible conductor (when applicable) is a mandatory information required by IEC, UL and CSA standards (Copper conductors). All other data are provided as supplementary information only. For more details, please consult our CB, UL or CSA certificates and technical datasheet available on http://www.TE.com

CE CB RoHS USR CSA EAC BV DNV

Accessories

	Description			Color	Type	Part Number		Pkg qty	Weight (1 pce) g
1	**End stops**	10 mm	0.394 in	Dark grey	BAM4	1SNK900001R0000		50	14.00
2	**End sections**	2.2 mm	0.087 in	Dark grey	ES6-4S	1SNK505911R0000		20	3.10
3	**Jumper bars**	2 poles	41 A (IEC)	Orange	JB6-2	1SNK906302R0000		50	1.30
		3 poles	41 A (IEC)		JB6-3	1SNK906303R0000		50	2.10
		4 poles	41 A (IEC)		JB6-4	1SNK906304R0000		50	2.90
		5 poles	41 A (IEC)		JB6-5	1SNK906305R0000		50	3.60
		10 poles	41 A (IEC)		JB6-10	1SNK906310R0000		20	7.40
4	**Circuit separators**	3 mm	0.118 in	Dark grey	CS-R1	1SNK900103R0000		20	5.20
5	**Test adapters**	For test plugs DIA 2 mm 0.079 in		Dark grey	TP2	1SNK900203R0000		20	1.70
		For test plugs DIA 4 mm 0.157 in			TP4	1SNK900205R0000		20	2.40
6	**Test connectors**	End module, 5.2 mm 0.205 in		Dark grey	TC5-R1	1SNK900201R0000		10	5.20
7	**Spacers**	0.8 mm	0.031 in	Dark grey	ES-TC6	1SNK900105R0000		10	0.80
8	**Terminal block markers**	Blank marker		White	MG-CPM 13 41791	1SNB041791R0612		1680	0.27
		Blank card			MC612	1SNK150000R0000		22	10.00
					MC612PA	1SNK159999R0000		20	11.00
		Universal wire markers holder		Grey	UMH	1SNK900611R0000		10	0.20

Complete list of accessories is indicated in the terminal block datasheet including end stops.
Some accessories such as jumper bars may modify the terminal block's ratings: Complete information available in the accessories section of the catalog.

1SNK161071S0201

Technical data valid for copper conductors only.

ZS10-S screw clamp terminal blocks

Disconnect with blade - 8 mm 0.315 in spacing

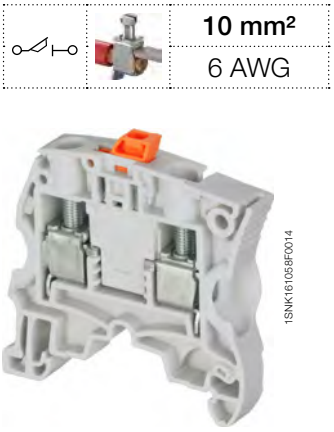

10 mm²
6 AWG

1SNK161059F0014

ZS10-S

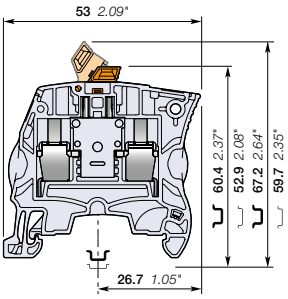

8 mm 0.315 in spacing

Description

- Ease your disconnect operations with the disconnect blade operated by hand or with a screwdriver,
- Same profile as ZS10 feed-through terminal block for aligned marking and identical end section use.

Ordering details

Description		Color	Type	Part Number		Pkg qty	Weight (1 pce) g
Disconnect	Profile aligned with ZS10	Grey	ZS10-S	1SNK508315R0000		50	8.60
		Blue	ZS10-S-BL	1SNK508320R0000		50	8.60

Main technical data

Connecting capacity		IEC	UL - CSA
1 conductor per clamp	Rigid: Solid/Stranded	0.2 ... 10 mm²	24 ... 6 AWG
	Flexible without ferrule	0.22 ... 10 mm²	
	Flexible with non insulated ferrule	0.22 ... 10 mm²	24 ... 12 AWG
	Flexible with insulated ferrule	0.22 ... 6 mm²	24 ... 12 AWG
	Gauge	A5-B5	
2 conductors per clamp	Rigid: Solid/Stranded	0.5 ... 4 mm²	20 ... 12 AWG
	Flexible without ferrule	0.5 ... 4 mm²	
	Flexible with twin ferrule	0.5 ... 4 mm²	20 ... 12 AWG
Rated current / Rated cross section		25 A / 4 mm²	25 A / 6 AWG
Maximum current / Maximum cross section		42 A / 10 mm²	
Rated short-time withstand current (1s)		480 A	
Rated voltage		630 V	300 V
Impulse withstand voltage		6000 V	
Protection		IP20	NEMA 1

Mounting instructions

Rail	TH 35-7.5, TH 35-15
Wire stripping length	12 mm 0.472 in
Tool	Flat screwdriver Ø 4 mm Ø 0.157 in
Torque	1.3 Nm ± 0.3 11.5 lb.in ± 2.65

Recommendation for best usage: in horizontal assemblies, disconnect terminal blocks should be mounted with fixed foot on top (power side) so that the disconnect knife does not partially close through gravity. Furthermore, as specified per IEC 60947-7-1, disconnect terminal blocks are intended to be used for temporary disconnection at zero potential and at no load.

The connecting capacity data for one Rigid: Solid/Stranded, or one Flexible conductor (when applicable) is a mandatory information required by IEC, UL and CSA standards (Copper conductors). All other data are provided as supplementary information only. For more details, please consult our CB, UL or CSA certificates and technical datasheet available on http://www.TE.com

CE CB RoHS USR CSA EAC BV DNV

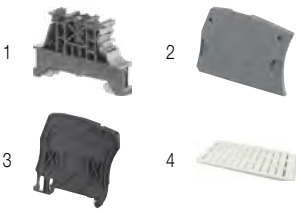

Accessories

	Description			Color	Type	Part Number		Pkg qty	Weight (1 pce) g
1	**End stops**	10 mm	0.394 in	Dark grey	BAM4	1SNK900001R0000		50	14.00
2	**End sections**	2.2 mm	0.087 in	Dark grey	ES4	1SNK505910R0000		20	2.20
3	**Circuit separators**	3 mm	0.118 in	Dark grey	CS-R1	1SNK900103R0000		20	5.20
4	**Terminal block markers**	Blank marker		White	MG-CPM 13 41791	1SNB041791R0612		1680	0.27
		Blank card			MC812	1SNK160000R0000		22	10.00
					MC812PA	1SNK169999R0000		20	14.00
		Universal wire markers holder		Grey	UMH	1SNK900611R0000		10	0.20

Complete list of accessories is indicated in the terminal block datasheet including end stops.
Some accessories such as jumper bars may modify the terminal block's ratings: Complete information available in the accessories section of the catalog.

1SNK161050S0201

Technical data valid for copper conductors only.

ZS4-SP screw clamp terminal blocks

Disconnect with plug - 5.2 mm 0.205 in spacing

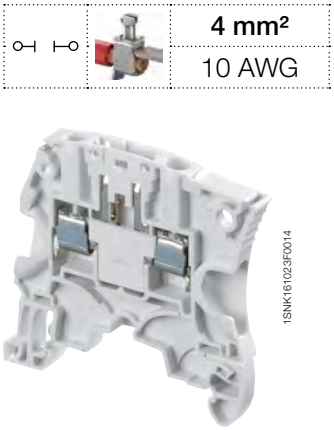

4 mm²
10 AWG

Description

- Save time with our screwless component holder plug,
- Same profile as ZS4 feed-through terminal block for aligned marking and identical end section use.

1SNK161023F0014

ZS4-SP

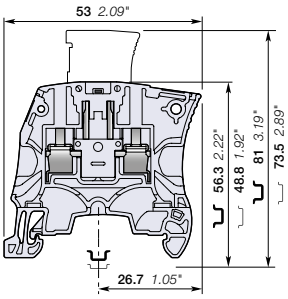

5.2 mm 0.205 in spacing

Ordering details

Description		Color	Type	Part Number		Pkg qty	Weight (1 pce) g
Disconnect	Profile aligned with ZS4, plug delivered separetely	Grey	ZS4-SP	1SNK505313R0000		50	8.20

Main technical data

Connecting capacity		IEC	UL - CSA
1 conductor per clamp	Rigid: Solid/Stranded	0.2 ... 4 mm²	24 ... 10 AWG
	Flexible without ferrule	0.22 ... 4 mm²	
	Flexible with non insulated ferrule	0.22 ... 4 mm²	24 ... 10 AWG
	Flexible with insulated ferrule	0.22 ... 2.5 mm²	24 ... 14 AWG
	Gauge	A3-B3	
2 conductors per clamp	Rigid: Solid/Stranded	0.2 ... 1.5 mm²	24 ... 16 AWG
	Flexible without ferrule	0.2 ... 1.5 mm²	
	Flexible with twin ferrule	0.22 ... 1.5 mm²	24 ... 16 AWG
Rated current / Rated cross section		18 A / 2.5 mm²	18 A / 10 AWG
Rated short-time withstand current (1s)		300 A	
Rated voltage		400 V	150 V
Impulse withstand voltage		6000 V	
Protection		IP20	NEMA 1

Mounting instructions

Rail		TH 35-7.5, TH 35-15
Wire stripping length		10.5 mm 0.412 in
Tool		Flat screwdriver Ø 3.5 mm Ø 0.138 in
Torque		0.6 Nm ± 0.1 5.31 lb.in ± 0.885

The connecting capacity data for one Rigid: Solid/Stranded, or one Flexible conductor (when applicable) is a mandatory information required by IEC, UL and CSA standards (Copper conductors). All other data are provided as supplementary information only. For more details, please consult our CB, UL or CSA certificates and technical datasheet available on http://www.TE.com

CE RoHS USR CNR CSA EAC

Accessories

	Description			Color	Type	Part Number		Pkg qty	Weight (1 pce) g
1	**End stops**	10 mm	0.394 in	Dark grey	BAM4	1SNK900001R0000		50	14.00
2	**End sections**	2.2 mm	0.087 in	Dark grey	ES4	1SNK505910R0000		20	2.20
3	**Lateral jumper bars**	2 poles	30 A (IEC)	Grey	PC5-2	1SNA113542R1000		10	1.80
		10 poles	30 A (IEC)		PC5-10	1SNA113544R1200		10	6.00
4	**Shield connectors**				SHBS	1SNK900600R0000		20	3.50
5	**Component plugs**	Components in series with circuit		Dark grey	PG5	1SNK900401R0000		20	3.50
6	**Disconnect plugs**	Equipped with linking bar		Orange	PG5-R1	1SNK900402R0000		20	3.50
7	**Terminal block markers**	Blank marker		White	MG-CPM 13 41790	1SNB041790R0512		1960	0.23
		Blank card			MC512	1SNK140000R0000		22	9.00
					MC512PA	1SNK149999R0000		20	10.00
		Universal wire markers holder		Grey	UMH	1SNK900611R0000		10	0.20

Complete list of accessories is indicated in the terminal block datasheet including end stops.
Some accessories such as jumper bars may modify the terminal block's ratings: Complete information available in the accessories section of the catalog.

1SNK161033S0201

Technical data valid for copper conductors only.

ZS4-SP-T2 screw clamp terminal blocks

Disconnect with plug - with test socket - 5.2 mm 0.205 in spacing

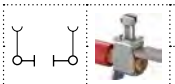

4 mm²
10 AWG

ZS4-SP-T2

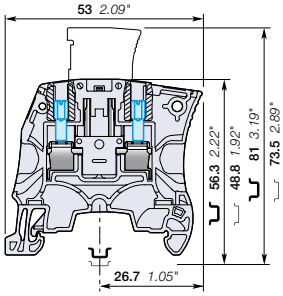

5.2 mm 0.205 in spacing

Description

- Ease your test operations with the 2 built-in test sockets DIA 2 mm 0.079 in,
- Save time with our screwless component holder plug,
- Same profile as ZS4 feed-through terminal block for aligned marking and identical end section use.

Ordering details

Description		Color	Type	Part Number		Pkg qty	Weight (1 pce) g
Disconnect	Profile aligned with ZS4, with 2 test sockets DIA 2 mm 0.079 in, plug delivered separetely	Grey	ZS4-SP-T2	1SNK505314R0000		50	8.40

Main technical data

Connecting capacity		IEC	UL - CSA
1 conductor per clamp	Rigid: Solid/Stranded	0.2 ... 4 mm²	24 ... 10 AWG
	Flexible without ferrule	0.22 ... 4 mm²	
	Flexible with non insulated ferrule	0.22 ... 4 mm²	24 ... 10 AWG
	Flexible with insulated ferrule	0.22 ... 2.5 mm²	24 ... 14 AWG
	Gauge	A3-B3	
2 conductors per clamp	Rigid: Solid/Stranded	0.2 ... 1.5 mm²	24 ... 16 AWG
	Flexible without ferrule	0.2 ... 1.5 mm²	
	Flexible with twin ferrule	0.22 ... 1.5 mm²	24 ... 16 AWG
Rated current / Rated cross section		18 A / 2.5 mm²	18 A / 10 AWG
Rated short-time withstand current (1s)		300 A	
Rated voltage		400 V	150 V
Impulse withstand voltage		6000 V	
Protection		IP20	NEMA 1

Mounting instructions

Rail		TH 35-7.5, TH 35-15
Wire stripping length		10.5 mm 0.412 in
Tool		Flat screwdriver Ø 3.5 mm Ø 0.138 in
Torque		0.6 Nm ± 0.1 5.31 lb.in ± 0.885

The connecting capacity data for one Rigid: Solid/Stranded, or one Flexible conductor (when applicable) is a mandatory information required by IEC, UL and CSA standards (Copper conductors). All other data are provided as supplementary information only. For more details, please consult our CB, UL or CSA certificates and technical datasheet available on http://www.TE.com

CE RoHS USR CNR CSA EAC

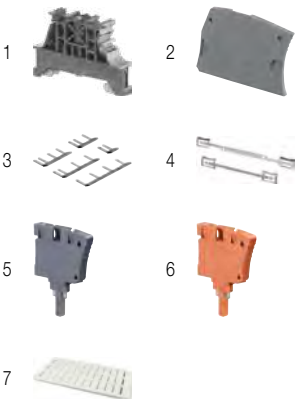

Accessories

	Description			Color	Type	Part Number		Pkg qty	Weight (1 pce) g
1	**End stops**	10 mm	0.394 in	Dark grey	BAM4	1SNK900001R0000		50	14.00
2	**End sections**	2.2 mm	0.087 in	Dark grey	ES4	1SNK505910R0000		20	2.20
3	**Lateral jumper bars**	2 poles	30 A (IEC)	Grey	PC5-2	1SNA113542R1000		10	1.80
		10 poles	30 A (IEC)		PC5-10	1SNA113544R1200		10	6.00
4	**Shield connectors**				SHBS	1SNK900600R0000		20	3.50
5	**Component plugs**	Components in series with circuit		Dark grey	PG5	1SNK900401R0000		20	3.50
6	**Disconnect plugs**	Equipped with linking bar		Orange	PG5-R1	1SNK900402R0000		20	3.50
7	**Terminal block markers**	Blank marker		White	MG-CPM 13 41790	1SNB041790R0512		1960	0.23
		Blank card			MC512	1SNK140000R0000		22	9.00
					MC512PA	1SNK149999R0000		20	10.00
		Universal wire markers holder		Grey	UMH	1SNK900611R0000		10	0.20

Complete list of accessories is indicated in the terminal block datasheet including end stops.
Some accessories such as jumper bars may modify the terminal block's ratings: Complete information available in the accessories section of the catalog.

1SNK161041S0201

Technical data valid for copper conductors only.

ZS4-SP-R1 screw clamp terminal blocks

Disconnect with plug - 6 mm 0.236 in spacing

4 mm²

10 AWG

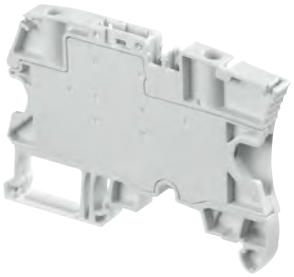

1SNK161022F0014

ZS4-SP-R1

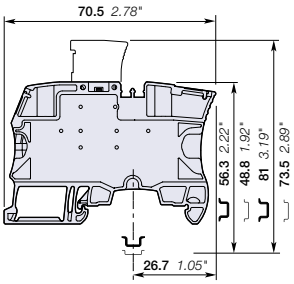

6 mm 0.236 in spacing

Description

- Simplify the alternated distribution between feed-through and disconnect circuits thanks to the two aligned jumper channels,
- Save time with our screwless component holder plug.

Ordering details

Description		Color	Type	Part Number		Pkg qty	Weight (1 pce) g
Disconnect	Profile aligned with ZS4-SF, plug delivered separetely	Grey	ZS4-SP-R1	1SNK506313R0000		50	14.20

Main technical data

Connecting capacity		IEC	UL - CSA
1 conductor per clamp	Rigid: Solid/Stranded	0.2 ... 4 mm²	24 ... 10 AWG
	Flexible without ferrule	0.22 ... 4 mm²	
	Flexible with non insulated ferrule	0.22 ... 4 mm²	24 ... 12 AWG
	Flexible with insulated ferrule	0.22 ... 4 mm²	24 ... 12 AWG
	Gauge	A3-B3	
2 conductors per clamp	Rigid: Solid/Stranded	0.2 ... 1.5 mm²	24 ... 16 AWG
	Flexible without ferrule	0.2 ... 1.5 mm²	
	Flexible with twin ferrule	0.22 ... 1.5 mm²	24 ... 16 AWG
Rated current / Rated cross section		18 A / 2.5 mm²	20 A / 10 AWG
Rated short-time withstand current (1s)		300 A	
Rated voltage		400 V	150 V
Impulse withstand voltage		6000 V	
Protection		IP20	NEMA 1

Mounting instructions

Rail		TH 35-7.5, TH 35-15
Wire stripping length		10.5 mm 0.412 in
Tool		Flat screwdriver Ø 3.5 mm Ø 0.138 in
Torque		0.6 Nm ± 0.1 5.31 lb.in ± 0.885

The connecting capacity data for one Rigid: Solid/Stranded, or one Flexible conductor (when applicable) is a mandatory information required by IEC, UL and CSA standards (Copper conductors). All other data are provided as supplementary information only. For more details, please consult our CB, UL or CSA certificates and technical datasheet available on http://www.TE.com

CE | RoHS | USR CNR | CSA | EAC

Accessories

	Description			Color	Type	Part Number		Pkg qty	Weight (1 pce) g
1	**End stops**	10 mm	0.394 in	Dark grey	BAM4	1SNK900001R0000		50	14.00
2	**Jumper bars**	2 poles	41 A (IEC)	Orange	JB6-2	1SNK906302R0000		50	1.30
		3 poles	41 A (IEC)		JB6-3	1SNK906303R0000		50	2.10
		4 poles	41 A (IEC)		JB6-4	1SNK906304R0000		50	2.90
		5 poles	41 A (IEC)		JB6-5	1SNK906305R0000		50	3.60
		10 poles	41 A (IEC)		JB6-10	1SNK906310R0000		20	7.40
3	**Test adapters**	For test plugs DIA 2 mm 0.079 in		Dark grey	TP2	1SNK900203R0000		20	1.70
		For test plugs DIA 4 mm 0.157 in			TP4	1SNK900205R0000		20	2.40
4	**Test connectors**	End module, 5.2 mm 0.205 in		Dark grey	TC5-R1	1SNK900201R0000		10	5.20
5	**Spacers**	0.8 mm	0.031 in	Dark grey	ES-TC6	1SNK900105R0000		10	0.80
6	**Component plugs**	Components in series with circuit		Dark grey	PG5	1SNK900401R0000		20	3.50
7	**Disconnect plugs**	Equipped with linking bar		Orange	PG5-R1	1SNK900402R0000		20	3.50
8	**Terminal block markers**	Blank marker		White	MG-CPM 13 41791	1SNB041791R0612		1680	0.27
		Blank card			MC612	1SNK150000R0000		22	10.00
					MC612PA	1SNK159999R0000		20	11.00
		Universal wire markers holder		Grey	UMH	1SNK900611R0000		10	0.20

Complete list of accessories is indicated in the terminal block datasheet including end stops.
Some accessories such as jumper bars may modify the terminal block's ratings: Complete information available in the accessories section of the catalog.

1SNK161039S0201

Technical data valid for copper conductors only.

ZS4-SP-T2-R1 screw clamp terminal blocks

Disconnect with plug - with test socket - 6 mm 0.236 in spacing

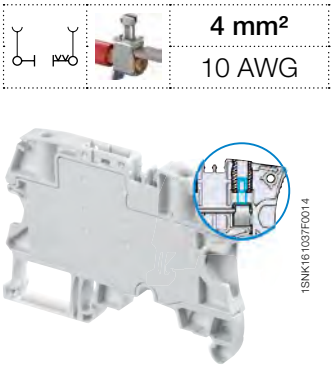

1SNK161037F0014

ZS4-SP-T2-R1

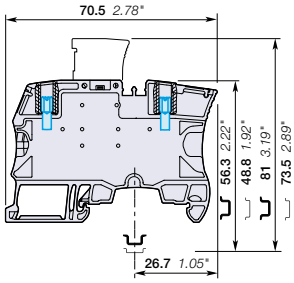

6 mm 0.236 in spacing

4 mm²
10 AWG

Description

- Ease your test operations with the 2 built-in test sockets DIA 2 mm 0.079 in,
- Save time with our screwless component holder plug,
- Simplify the distribution between feed-through and disconnect circuits thanks to the two aligned jumper channels.

Ordering details

Description		Color	Type	Part Number		Pkg qty	Weight (1 pce) g
Disconnect	Profile aligned with ZS4-SF, with 2 test sockets DIA 2 mm 0.079 in, plug delivered separetely	Grey	ZS4-SP-T2-R1	1SNK506314R0000		50	14.20

Main technical data

Connecting capacity		IEC	UL - CSA
1 conductor per clamp	Rigid: Solid/Stranded	0.2 ... 4 mm²	24 ... 10 AWG
	Flexible without ferrule	0.22 ... 4 mm²	
	Flexible with non insulated ferrule	0.22 ... 4 mm²	24 ... 12 AWG
	Flexible with insulated ferrule	0.22 ... 4 mm²	24 ... 12 AWG
	Gauge	A3-B3	
2 conductors per clamp	Rigid: Solid/Stranded	0.2 ... 1.5 mm²	24 ... 16 AWG
	Flexible without ferrule	0.2 ... 1.5 mm²	
	Flexible with twin ferrule	0.22 ... 1.5 mm²	24 ... 16 AWG
Rated current / Rated cross section		18 A / 2.5 mm²	20 A / 10 AWG
Rated short-time withstand current (1s)		300 A	
Rated voltage		400 V	150 V
Impulse withstand voltage		6000 V	
Protection		IP20	NEMA 1

Mounting instructions

Rail		TH 35-7.5, TH 35-15
Wire stripping length		10.5 mm 0.412 in
Tool		Flat screwdriver Ø 3.5 mm Ø 0.138 in
Torque		0.6 Nm ± 0.1 5.31 lb.in ± 0.885

The connecting capacity data for one Rigid: Solid/Stranded, or one Flexible conductor (when applicable) is a mandatory information required by IEC, UL and CSA standards (Copper conductors). All other data are provided as supplementary information only. For more details, please consult our CB, UL or CSA certificates and technical datasheet available on http://www.TE.com

CE RoHS USR CNR CSA EAC

Accessories

	Description			Color	Type	Part Number		Pkg qty	Weight (1 pce) g
1	**End stops**	10 mm	0.394 in	Dark grey	BAM4	1SNK900001R0000		50	14.00
2	**Jumper bars**	2 poles	41 A (IEC)	Orange	JB6-2	1SNK906302R0000		50	1.30
		3 poles	41 A (IEC)		JB6-3	1SNK906303R0000		50	2.10
		4 poles	41 A (IEC)		JB6-4	1SNK906304R0000		50	2.90
		5 poles	41 A (IEC)		JB6-5	1SNK906305R0000		50	3.60
		10 poles	41 A (IEC)		JB6-10	1SNK906310R0000		20	7.40
3	**Test connectors**	End module, 5.2 mm 0.205 in		Dark grey	TC5-R1	1SNK900201R0000		10	5.20
4	**Spacers**	0.8 mm	0.031 in	Dark grey	ES-TC6	1SNK900105R0000		10	0.80
5	**Component plugs**	Components in series with circuit		Dark grey	PG5	1SNK900401R0000		20	3.50
6	**Disconnect plugs**	Equipped with linking bar		Orange	PG5-R1	1SNK900402R0000		20	3.50
7	**Terminal block markers**	Blank marker		White	MG-CPM 13 41791	1SNB041791R0612		1680	0.27
		Blank card			MC612	1SNK150000R0000		22	10.00
					MC612PA	1SNK159999R0000		20	11.00
		Universal wire markers holder		Grey	UMH	1SNK900611R0000		10	0.20

Complete list of accessories is indicated in the terminal block datasheet including end stops.
Some accessories such as jumper bars may modify the terminal block's ratings: Complete information available in the accessories section of the catalog.

8

1SNK161040S0201

Technical data valid for copper conductors only.

ZS10-SP screw clamp terminal blocks

Disconnect with plug - 8 mm 0.315 in spacing

10 mm²

6 AWG

Description

- Save time with our screwless component holder plug,
- Same profile as ZS10 feed-through terminal block for aligned marking and identical end section use.

1SNK161060F0014

ZS10-SP

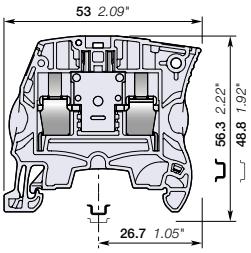

8 mm 0.315 in spacing

Ordering details

Description		Color	Type	Part Number		Pkg qty	Weight (1 pce) g
Disconnect	Profile aligned with ZS10	Grey	ZS10-SP	1SNK508316R0000		50	8.60

Main technical data

Connecting capacity		IEC	UL - CSA
1 conductor per clamp	Rigid: Solid/Stranded	0.2 ... 10 mm²	24 ... 6 AWG
	Flexible without ferrule	0.22 ... 10 mm²	
	Flexible with non insulated ferrule	0.22 ... 10 mm²	24 ... 8 AWG
	Flexible with insulated ferrule	0.22 ... 6 mm²	24 ... 8 AWG
	Gauge	A5-B5	
2 conductors per clamp	Rigid: Solid/Stranded	0.5 ... 4 mm²	20 ... 12 AWG
	Flexible without ferrule	0.5 ... 4 mm²	
	Flexible with twin ferrule	0.5 ... 4 mm²	20 ... 12 AWG
Rated current / Rated cross section		18 A / 2.5 mm²	18 A / 6 AWG
Maximum current / Maximum cross section		18 A / 10 mm²	
Rated short-time withstand current (1s)		300 A	
Rated voltage		630 V	300 V
Impulse withstand voltage		6000 V	
Protection		IP20	NEMA 1

Mounting instructions

Rail	TH 35-7.5, TH 35-15
Wire stripping length	12 mm 0.472 in
Tool	Flat screwdriver Ø 4 mm Ø 0.157 in
Torque	1.3 Nm ± 0.3 11.5 lb.in ± 2.65

The connecting capacity data for one Rigid: Solid/Stranded, or one Flexible conductor (when applicable) is a mandatory information required by IEC, UL and CSA standards (Copper conductors). All other data are provided as supplementary information only. For more details, please consult our CB, UL or CSA certificates and technical datasheet available on http://www.TE.com

CE RoHS USR CSA EAC

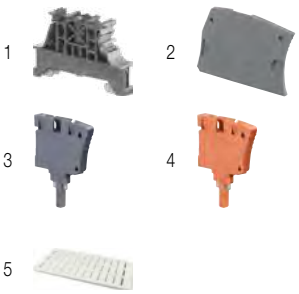

Accessories

	Description			Color	Type	Part Number		Pkg qty	Weight (1 pce) g
1	**End stops**	10 mm	0.394 in	Dark grey	BAM4	1SNK900001R0000		50	14.00
2	**End sections**	2.2 mm	0.087 in	Dark grey	ES4	1SNK505910R0000		20	2.20
3	**Component plugs**	Components in series with circuit		Dark grey	PG5	1SNK900401R0000		20	3.50
4	**Disconnect plugs**	Equipped with linking bar		Orange	PG5-R1	1SNK900402R0000		20	3.50
5	**Terminal block markers**	Blank marker		White	MG-CPM 13 41791	1SNB041791R0612		1680	0.27
		Blank card			MC812	1SNK160000R0000		22	10.00
					MC812PA	1SNK169999R0000		20	14.00
		Universal wire markers holder		Grey	UMH	1SNK900611R0000		10	0.20

Complete list of accessories is indicated in the terminal block datasheet including end stops.
Some accessories such as jumper bars may modify the terminal block's ratings: Complete information available in the accessories section of the catalog.

1SNK161051S0201

Technical data valid for copper conductors only.

Optimize your control circuit protection

Our SNK series fuse terminal blocks offer a full set of features and functions to protect your control circuits with efficiency and reliability.
All terminal blocks complies with the latest evolution of the international standards IEC 60947-7-3 (“Ancillary equipment safety requirements for fuse terminal blocks.”) which fixes precise temperature constraint for short-circuit and overload protection (information in the catalogue pages related to the products).

Qualified for worldwide markets and applications
Eco-designed according to international environmental standards in sustainable development.

Select the right fuse holder for the right application

1 standard applications

The standard fuse holders feature compact dimensions while offering compatibility with 5 x 20 and 5 x 25 mm fuses. double deck terminal blocks allow efficient space reduction for panels with space constraints.

2 Expert for convenient circuit distribution

The expert fuse holders are equipped with two central jumper channels for convenient common distribution and are aligned with feed-through and disconnect terminal blocks. They facilitate alternated potential distribution and reduce wiring.

Additional features for easy trouble shooting and testing

Performant blown fuse indicators

Low leakage current (< 0.5 mA) allows the protection of low current circuits such as PLC’s inputs without any risk of circuit disturbances.
Large voltage range (24/110 V and 110/250 V AC/DC) reduces the number of variants and allows adaptation to worldwide applications (24/110 V range covers North american market needs).

Easy testing

Some terminal blocks are equipped with Dia 2 mm built-in test socket screws for circuit testing while respecting the IP20 touch proof protection.

1
5x20 and 5x25 mm fuses
Compact and high density

2
5x20 and 6.3x32 mm fuses
Easy potential distribution

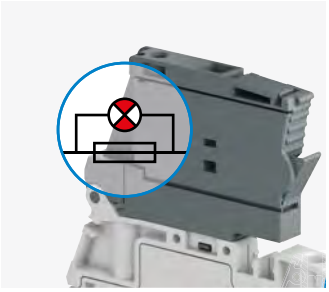

Low leakage current blown fuse indicator.
Large voltage range: (24/110 V and 110/250 V AC and DC)

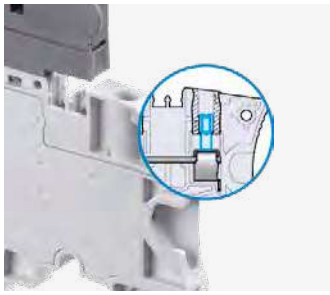

Convenient testing through built in test socket screws

1SNK161085S0201

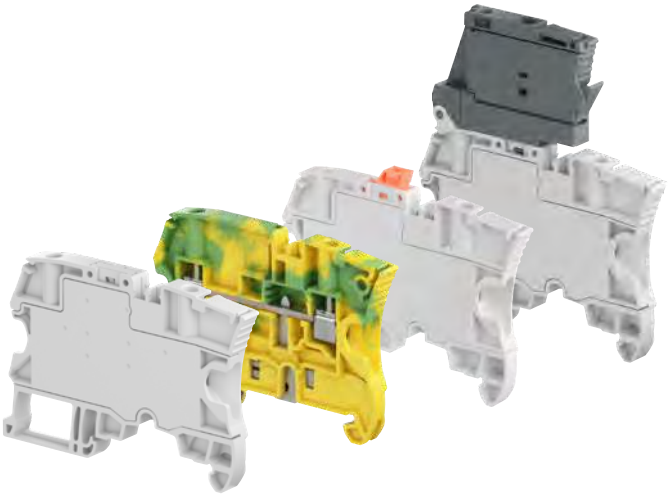

The smart choice for process automation

Large process automation applications typically require the use of a large number of digital or analog signals and sensors. Indeed, marshalling cabinets ensure an important cross wiring function, since the incoming field signal and the channel quantity of the I/O card of the controller (DCS, large PLC's) is always different. They facilitate the maintenance operations and ease the system modifications.

SNK aligned terminal blocks offering:

SNK series now features a full set of aligned terminal blocks matching the marshalling panels typical configurations. Fuse, disconnect, feed-through and ground terminal blocks with identical profile are providing compact and convenient solution. With only 6 mm spacing, two aligned screwless jumper channels, central large marking as well as aligned conductor entries, they are perfectly adapted to alternative potential distribution while still easy to connect.

Typical marshalling configurations

Digital signals

Popular potential distribution via double center channel.

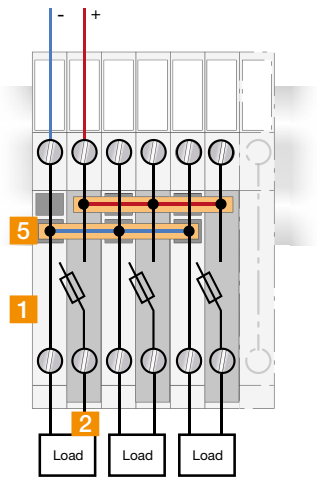

Disconnect functions equipped with test points allow total isolation of circuits, ease circuit testing during start-up, test and maintenance operations.

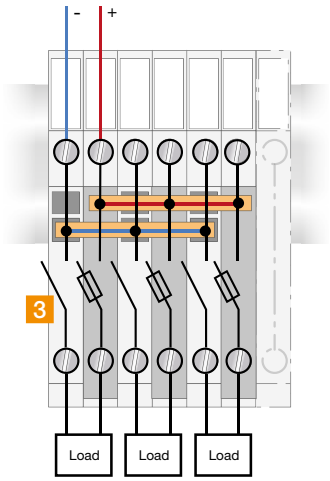

Analog

Potential distribution for analog signals. Ground terminal blocks allow reliable connection of cable shields to the ground sparing the use of external shield bar.

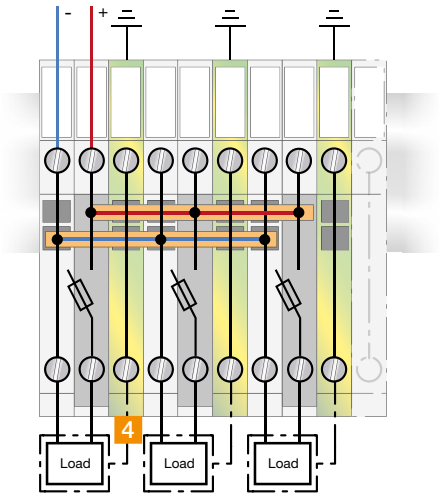

1 ZS4-R2

2 ZS4-SF

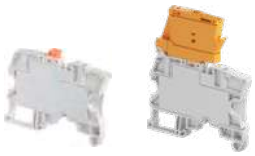

3 ZS4-S-R1 or ZS4-S-R2

4 ZS4-PE-R2

5 JB6-...

1SNK161086S0201

ZS4-SF1 screw clamp terminal blocks

For 5 x 20 and 5 x 25 fuses - 8 mm 0.315 in spacing

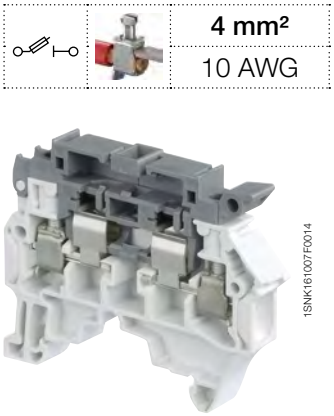

4 mm²	
10 AWG	

1SNK161007F0014

ZS4-SF1

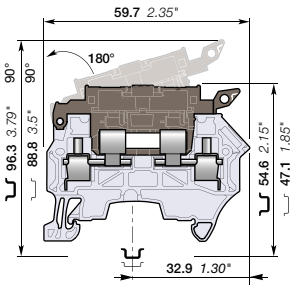

8 mm 0.315 in spacing

Description

Protect your circuit with 5x25 and 5x20 fuse terminal blocks, compliant with IEC 60947-7-3 standard (fuse not supplied with the terminal blocks).

Ordering details

Description	Color	Type	Part Number		Pkg qty	Weight (1 pce) g
Fuse	Grey, dark grey	ZS4-SF1	1SNK508410R0000		50	13.30
	Orange, dark grey	ZS4-SF1-OR	1SNK508430R0000		50	13.30

Main technical data

Connecting capacity		IEC	UL - CSA
1 conductor per clamp	Rigid: Solid/Stranded	0.2 ... 4 mm²	24 ... 10 AWG
	Flexible without ferrule	0.22 ... 4 mm²	
	Flexible with non insulated ferrule	0.22 ... 4 mm²	24 ... 12 AWG
	Flexible with insulated ferrule	0.22 ... 4 mm²	24 ... 12 AWG
	Gauge	A3-B3	
2 conductors per clamp	Rigid: Solid/Stranded	0.2 ... 2.5 mm²	24 ... 14 AWG
	Flexible without ferrule	0.2 ... 2.5 mm²	
	Flexible with twin ferrule	0.22 ... 2.5 mm²	24 ... 14 AWG
Rated current / Rated cross section		6.3 A / 4 mm²	10 A / 10 AWG
Rated voltage		630 V	300 V
Impulse withstand voltage		8000 V	
Protection		IP20	NEMA 1

Mounting instructions

Rail	TH 35-7.5, TH 35-15
Wire stripping length	11 mm 0.432 in
Tool	Flat screwdriver Ø 3.5 mm Ø 0.138 in
Torque	0.6 Nm ± 0.1 5.31 lb.in ± 0.885

Separate arrangement		Assembly composed of 1 fuse terminal block in between non fuse terminal blocks	Overload and short-circuit protection	2.5 W
			Exclusive short-circuit protection	4 W
Compound arrangement		Assembly composed of 5 fuse terminal blocks	Overload and short-circuit protection	1.6 W
			Exclusive short-circuit protection	4 W

The connecting capacity data for one Rigid: Solid/Stranded, or one Flexible conductor (when applicable) is a mandatory information required by IEC, UL and CSA standards (Copper conductors). All other data are provided as supplementary information only. For more details, please consult our CB, UL or CSA certificates and technical datasheet available on http://www.TE.com

CE | CB | RoHS | USR CNR | CSA | EAC | BV | DNV | Rina

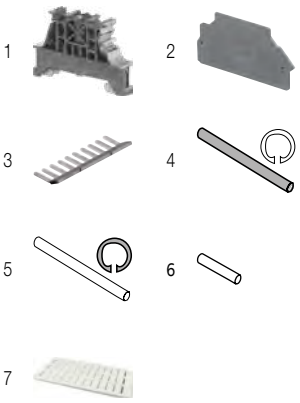

Accessories

	Description			Color	Type	Part Number		Pkg qty	Weight (1 pce) g
1	End stops	10 mm	0.394 in	Dark grey	BAM4	1SNK900001R0000		50	14.00
2	End sections	1.5 mm	0.059 in	Dark grey	ES4-SF	1SNK508960R0000		20	1.80
3	Lateral jumper bars	10 poles	35 A (IEC)	Grey	PC81-10	1SNA173523R1100		10	5.00
4	Assembly rods	2 poles			TGA8	1SNA168672R1100		10	1.00
		3 poles			TGA8	1SNA168673R1200		10	1.50
		4 poles			TGA8	1SNA168674R1300		10	2.00
5	Spring retaining Rings				ANT	1SNA168675R1400		10	
6	Neutral cartridge	5x25			CN5	1SNA179371R1600		10	3.9
7	Terminal block markers	Blank marker		White	MG-CPM 13 41791	1SNB041791R0612		1680	0.27
		Blank card			MC812	1SNK160000R0000		22	10.00
					MC812PA	1SNK169999R0000		20	14.00
		Universal wire markers holder		Grey	UMH	1SNK900611R0000		10	0.20

Complete list of accessories is indicated in the terminal block datasheet including end stops.
Some accessories such as jumper bars may modify the terminal block's ratings: Complete information available in the accessories section of the catalog.

1SNK161011S0201

Technical data valid for copper conductors only.

ZS4-SF1-T screw clamp terminal blocks

For 5 x 20 and 5 x 25 fuses - with test socket - 8 mm 0.315 in spacing

4 mm²
10 AWG

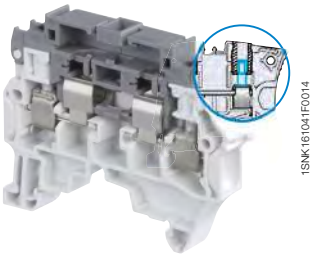

ZS4-SF1-T

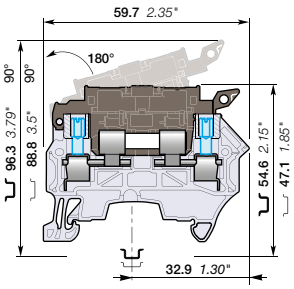

8 mm 0.315 in spacing

Description

- Protect your circuit with 5x25 and 5x20 fuse terminal blocks (fuse not supplied with the terminal blocks),
- Compliant with IEC 60947-7-3 standard,
- With built in test sockets.

Ordering details

Description		Color	Type	Part Number		Pkg qty	Weight (1 pce) g
Fuse	With 2 test sockets DIA 2 mm 0.079 in	Grey, dark grey	ZS4-SF1-T2	1SNK508411R0000		50	13.30

Main technical data

Connecting capacity		IEC	UL - CSA
1 conductor per clamp	Rigid: Solid/Stranded	0.2 ... 4 mm²	24 ... 10 AWG
	Flexible without ferrule	0.22 ... 4 mm²	
	Flexible with non insulated ferrule	0.22 ... 4 mm²	24 ... 12 AWG
	Flexible with insulated ferrule	0.22 ... 4 mm²	24 ... 12 AWG
	Gauge	A3-B3	
2 conductors per clamp	Rigid: Solid/Stranded	0.2 ... 2.5 mm²	24 ... 14 AWG
	Flexible without ferrule	0.2 ... 2.5 mm²	
	Flexible with twin ferrule	0.22 ... 2.5 mm²	24 ... 14 AWG
Rated current / Rated cross section		6.3 A / 4 mm²	10 A / 10 AWG
Rated voltage		630 V	300 V
Impulse withstand voltage		8000 V	
Protection		IP20	NEMA 1

Mounting instructions

Rail		TH 35-7.5, TH 35-15
Wire stripping length		11 mm 0.432 in
Tool		Flat screwdriver Ø 3.5 mm Ø 0.138 in
Torque		0.6 Nm ± 0.1 5.31 lb.in ± 0.885

Separate arrangement		Assembly composed of 1 fuse terminal block in between non fuse terminal blocks	Overload and short-circuit protection	2.5 W
			Exclusive short-circuit protection	4 W
Compound arrangement		Assembly composed of 5 fuse terminal blocks	Overload and short-circuit protection	1.6 W
			Exclusive short-circuit protection	4 W

The connecting capacity data for one Rigid: Solid/Stranded, or one Flexible conductor (when applicable) is a mandatory information required by IEC, UL and CSA standards (Copper conductors). All other data are provided as supplementary information only. For more details, please consult our CB, UL or CSA certificates and technical datasheet available on http://www.TE.com

CE CB RoHS USR CNR CSA EAC BV DNV Rina

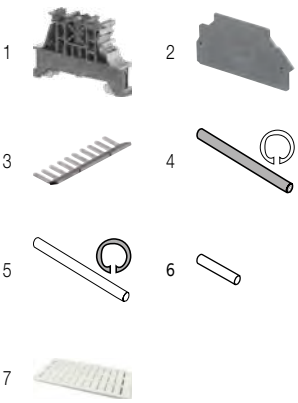

Accessories

	Description			Color	Type	Part Number		Pkg qty	Weight (1 pce) g
1	**End stops**	10 mm	0.394 in	Dark grey	BAM4	1SNK900001R0000		50	14.00
2	**End sections**	1.5 mm	0.059 in	Dark grey	ES4-SF	1SNK508960R0000		20	1.80
3	**Lateral jumper bars**	10 poles	35 A (IEC)	Grey	PC81-10	1SNA173523R1100		10	5.00
4	**Assembly rods**	2 poles			TGA8	1SNA168672R1100		10	1.00
		3 poles			TGA8	1SNA168673R1200		10	1.50
		4 poles			TGA8	1SNA168674R1300		10	2.00
5	**Spring retaining Rings**				ANT	1SNA168675R1400		10	
6	**Neutral cartridge**	5x25			CN5	1SNA179371R1600		10	3.9
7	**Terminal block markers**	Blank marker		White	MG-CPM 13 41791	1SNB041791R0612		1680	0.27
		Blank card			MC812	1SNK160000R0000		22	10.00
					MC812PA	1SNK169999R0000		20	14.00
		Universal wire markers holder		Grey	UMH	1SNK900611R0000		10	0.20

Complete list of accessories is indicated in the terminal block datasheet including end stops.
Some accessories such as jumper bars may modify the terminal block's ratings: Complete information available in the accessories section of the catalog.

8

1SNK161036S0201

Technical data valid for copper conductors only.

ZS4-SF1-R screw clamp terminal blocks

For 5 x 20 and 5 x 25 fuses - with blown fuse indicator - 8 mm 0.315 in spacing

4 mm²
10 AWG

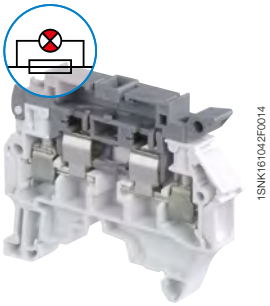

ZS4-SF1-R

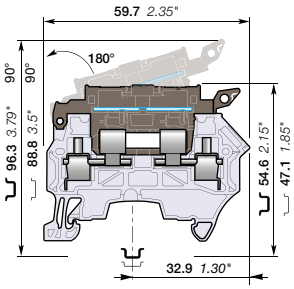

8 mm 0.315 in spacing

Description

- Protect your circuit with 5x25 and 5x20 fuse terminal blocks (fuse not supplied with the terminal blocks),
- Compliant with IEC 60947-7-3 standard,
- Quickly identify the defective circuit thanks to the blown fuse indicator (with leakage current < 0.5 mA).

Ordering details

Description		Color	Type	Part Number		Pkg qty	Weight (1 pce) g
Fuse	With blown fuse indicator 115 ... 250 V AC / DC	Grey, dark grey	ZS4-SF1-R3	1SNK508414R0000		50	13.30
	With blown fuse indicator 24 ... 110 V AC / DC		ZS4-SF1-R1	1SNK508412R0000		50	13.30

Main technical data

Connecting capacity		IEC	UL - CSA
1 conductor per clamp	Rigid: Solid/Stranded	0.2 ... 4 mm²	24 ... 10 AWG
	Flexible without ferrule	0.22 ... 4 mm²	
	Flexible with non insulated ferrule	0.22 ... 4 mm²	24 ... 12 AWG
	Flexible with insulated ferrule	0.22 ... 4 mm²	24 ... 12 AWG
	Gauge	A3-B3	
2 conductors per clamp	Rigid: Solid/Stranded	0.2 ... 2.5 mm²	24 ... 14 AWG
	Flexible without ferrule	0.2 ... 2.5 mm²	
	Flexible with twin ferrule	0.22 ... 2.5 mm²	24 ... 14 AWG
Rated current / Rated cross section		6.3 A / 4 mm²	10 A / 10 AWG
Rated voltage		630 V	300 V
Impulse withstand voltage		8000 V	
Protection		IP20	NEMA 1

Mounting instructions

Rail		TH 35-7.5, TH 35-15
Wire stripping length		11 mm 0.432 in
Tool		Flat screwdriver Ø 3.5 mm Ø 0.138 in
Torque		0.6 Nm ± 0.1 5.31 lb.in ± 0.885

Separate arrangement		Assembly composed of 1 fuse terminal block in between non fuse terminal blocks	Overload and short-circuit protection	2.5 W
			Exclusive short-circuit protection	4 W
Compound arrangement		Assembly composed of 5 fuse terminal blocks	Overload and short-circuit protection	1.6 W
			Exclusive short-circuit protection	4 W

The connecting capacity data for one Rigid: Solid/Stranded, or one Flexible conductor (when applicable) is a mandatory information required by IEC, UL and CSA standards (Copper conductors). All other data are provided as supplementary information only. For more details, please consult our CB, UL or CSA certificates and technical datasheet available on http://www.TE.com

CE | CB | RoHS | USR CNR | CSA | EAC | BV | DNV | Rina

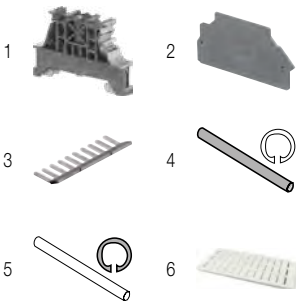

Accessories

	Description			Color	Type	Part Number		Pkg qty	Weight (1 pce) g
1	**End stops**	10 mm	0.394 in	Dark grey	BAM4	1SNK900001R0000		50	14.00
2	**End sections**	1.5 mm	0.059 in	Dark grey	ES4-SF	1SNK508960R0000		20	1.80
3	**Lateral jumper bars**	10 poles	35 A (IEC)	Grey	PC81-10	1SNA173523R1100		10	5.00
4	**Assembly rods**	2 poles			TGA8	1SNA168672R1100		10	1.00
		3 poles			TGA8	1SNA168673R1200		10	1.50
		4 poles			TGA8	1SNA168674R1300		10	2.00
5	**Spring retaining Rings**				ANT	1SNA168675R1400		10	
6	**Terminal block markers**	Blank marker		White	MG-CPM 13 41791	1SNB041791R0612		1680	0.27
		Blank card			MC812	1SNK160000R0000		22	10.00
					MC812PA	1SNK169999R0000		20	14.00
		Universal wire markers holder		Grey	UMH	1SNK900611R0000		10	0.20

Complete list of accessories is indicated in the terminal block datasheet including end stops.
Some accessories such as jumper bars may modify the terminal block's ratings: Complete information available in the accessories section of the catalog.

1SNK161034S0201

Technical data valid for copper conductors only.

ZS4-SF1-R screw clamp terminal blocks

For 5 x 20 and 5 x 25 fuses - with blown fuse indicator and test sockets - 8 mm 0.315 in spacing

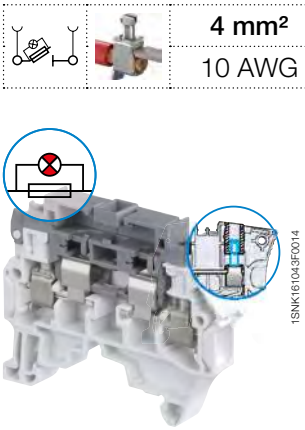

ZS4-SF1-R

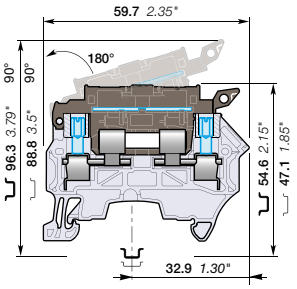

8 mm 0.315 in spacing

	4 mm²
	10 AWG

Description

- Protect your circuit with 5x25 and 5x20 fuse terminal blocks (fuse not supplied with the terminal blocks),
- Compliant with IEC 60947-7-3 standard,
- Ease the test with built-in test sockets,
- Quickly identify the defective circuit thanks to the blown fuse indicator (with leakage current < 0.5 mA).

Ordering details

Description		Color	Type	Part Number		Pkg qty	Weight (1 pce) g
Fuse	With blown fuse indicator 115 … 250 V AC / DC and 2 test sockets DIA 2 mm 0.079 in	Grey, dark grey	ZS4-SF1-R4	1SNK508415R0000		50	13.30
	With blown fuse indicator 24 … 110 V AC / DC and 2 test sockets DIA 2 mm 0.079 in		ZS4-SF1-R2	1SNK508413R0000		50	13.30

Main technical data

Connecting capacity		IEC	UL - CSA
1 conductor per clamp	Rigid: Solid/Stranded	0.2 … 4 mm²	24 … 10 AWG
	Flexible without ferrule	0.22 … 4 mm²	
	Flexible with non insulated ferrule	0.22 … 4 mm²	24 … 12 AWG
	Flexible with insulated ferrule	0.22 … 4 mm²	24 … 12 AWG
	Gauge	A3-B3	
2 conductors per clamp	Rigid: Solid/Stranded	0.2 … 2.5 mm²	24 … 14 AWG
	Flexible without ferrule	0.2 … 2.5 mm²	
	Flexible with twin ferrule	0.22 … 2.5 mm²	24 … 14 AWG
Rated current / Rated cross section		6.3 A / 4 mm²	10 A / 10 AWG
Rated voltage		630 V	300 V
Impulse withstand voltage		8000 V	
Protection		IP20	NEMA 1

Mounting instructions

Rail	TH 35-7.5, TH 35-15
Wire stripping length	11 mm 0.432 in
Tool	Flat screwdriver Ø 3.5 mm Ø 0.138 in
Torque	0.6 Nm ± 0.1 5.31 lb.in ± 0.885

Separate arrangement		Assembly composed of 1 fuse terminal block in between non fuse terminal blocks	Overload and short-circuit protection	2.5 W
			Exclusive short-circuit protection	4 W
Compound arrangement		Assembly composed of 5 fuse terminal blocks	Overload and short-circuit protection	1.6 W
			Exclusive short-circuit protection	4 W

The connecting capacity data for one Rigid: Solid/Stranded, or one Flexible conductor (when applicable) is a mandatory information required by IEC, UL and CSA standards (Copper conductors). All other data are provided as supplementary information only. For more details, please consult our CB, UL or CSA certificates and technical datasheet available on http://www.TE.com

CE, CB, RoHS, USR CNR, CSA, EAC, BV, DNV, Rina

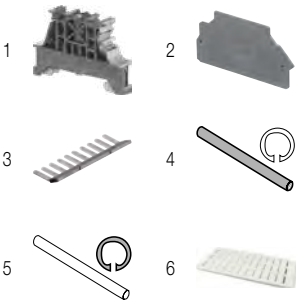

Accessories

	Description			Color	Type	Part Number		Pkg qty	Weight (1 pce) g
1	**End stops**	10 mm	0.394 in	Dark grey	BAM4	1SNK900001R0000		50	14.00
2	**End sections**	1.5 mm	0.059 in	Dark grey	ES4-SF	1SNK508960R0000		20	1.80
3	**Lateral jumper bars**	10 poles	35 A (IEC)	Grey	PC81-10	1SNA173523R1100		10	5.00
4	**Assembly rods**	2 poles			TGA8	1SNA168672R1100		10	1.00
		3 poles			TGA8	1SNA168673R1200		10	1.50
		4 poles			TGA8	1SNA168674R1300		10	2.00
5	**Spring retaining Rings**				ANT	1SNA168675R1400		10	
6	**Terminal block markers**	Blank marker		White	MG-CPM 13 41791	1SNB041791R0612		1680	0.27
		Blank card			MC812	1SNK160000R0000		22	10.00
					MC812PA	1SNK169999R0000		20	14.00
		Universal wire markers holder		Grey	UMH	1SNK900611R0000		10	0.20

Complete list of accessories is indicated in the terminal block datasheet including end stops.
Some accessories such as jumper bars may modify the terminal block's ratings: Complete information available in the accessories section of the catalog.

1SNK161035S0201

Technical data valid for copper conductors only.

ZS4-R1 screw clamp terminal blocks
Feed-through - 8 mm 0.315 in spacing

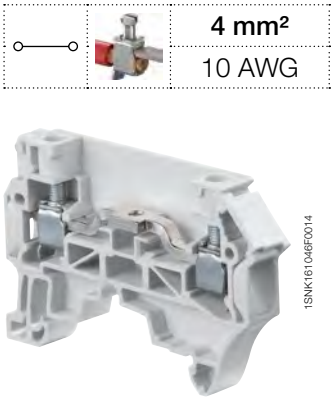

ZS4-R1

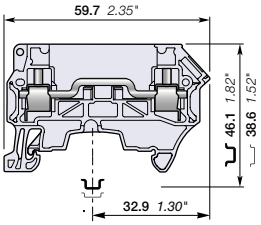

8 mm 0.315 in spacing

	4 mm²
	10 AWG

Description

Simplify the alternated feed-through and fuse circuits operations:

– With the same profile as the ZS4-SF1, the wiring of the alternated feed-through and fuse circuits is easier.

Ordering details

Description		Color	Type	Part Number		Pkg qty	Weight (1 pce) g
Feed-through	Profile aligned with ZS4-SF1	Grey	ZS4-R1	1SNK508013R0000		50	11.00

Main technical data

Connecting capacity		IEC	UL - CSA
1 conductor per clamp	Rigid: Solid/Stranded	0.2 ... 4 mm²	24 ... 10 AWG
	Flexible without ferrule	0.22 ... 4 mm²	
	Flexible with non insulated ferrule	0.22 ... 4 mm²	24 ... 12 AWG
	Flexible with insulated ferrule	0.22 ... 4 mm²	24 ... 12 AWG
	Gauge	A3-B3	
2 conductors per clamp	Rigid: Solid/Stranded	0.2 ... 2.5 mm²	24 ... 14 AWG
	Flexible without ferrule	0.2 ... 2.5 mm²	
	Flexible with twin ferrule	0.22 ... 2.5 mm²	24 ... 14 AWG
Rated current / Rated cross section		24 A / 2.5 mm²	26 A / 10 AWG
Rated short-time withstand current (1s)		300 A	
Short Circuit Current Rating (with specific conditions)			
Rated voltage		800 V	300 V
Impulse withstand voltage		6000 V	
Protection		IP20	NEMA 1

Mounting instructions

Rail	TH 35-7.5, TH 35-15
Wire stripping length	11 mm 0.432 in
Tool	Flat screwdriver Ø 3.5 mm Ø 0.138 in
Torque	0.6 Nm ± 0.1 5.31 lb.in ± 0.885

The connecting capacity data for one Rigid: Solid/Stranded, or one Flexible conductor (when applicable) is a mandatory information required by IEC, UL and CSA standards (Copper conductors). All other data are provided as supplementary information only. For more details, please consult our CB, UL or CSA certificates and technical datasheet available on http://www.TE.com

CE, CB, RoHS, USR CNR, CSA, EAC, BV, DNV, Rina

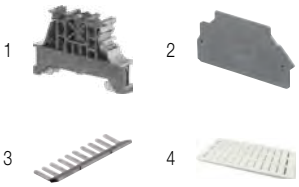

Accessories

	Description			Color	Type	Part Number		Pkg qty	Weight (1 pce) g
1	**End stops**	10 mm	0.394 in	Dark grey	BAM4	1SNK900001R0000		50	14.00
2	**End sections**	1.5 mm	0.059 in	Dark grey	ES4-SF	1SNK508960R0000		20	1.80
3	**Lateral jumper bars**	10 poles	35 A (IEC)	Grey	PC81-10	1SNA173523R1100		10	5.00
4	**Terminal block markers**	Blank marker		White	MG-CPM 13 41791	1SNB041791R0612		1680	0.27
		Blank card			MC812	1SNK160000R0000		22	10.00
					MC812PA	1SNK169999R0000		20	14.00
		Universal wire markers holder		Grey	UMH	1SNK900611R0000		10	0.20

Complete list of accessories is indicated in the terminal block datasheet including end stops.
Some accessories such as jumper bars may modify the terminal block's ratings: Complete information available in the accessories section of the catalog.

Fuse screw clamp terminal blocks

Description	Color	Type	Part Number		Pkg qty	Weight (1 pce) g
Fuse	Grey, dark grey	ZS4-SF1	1SNK508410R0000		50	13.30

1SNK161009S0201

Technical data valid for copper conductors only.

ZS4-S-R3 screw clamp terminal blocks

Disconnect with lever - 8 mm 0.315 in spacing

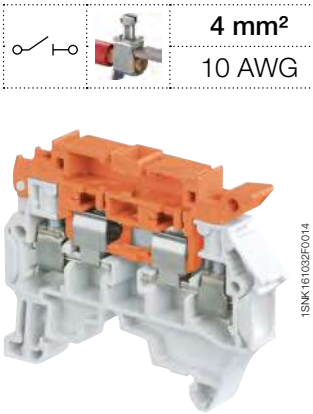

1SNK161032F0014

ZS4-S-R3

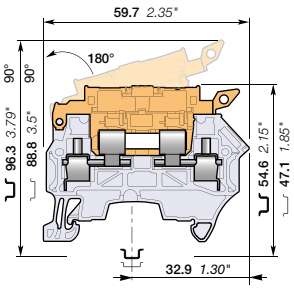

8 mm 0.315 in spacing

4 mm²
10 AWG

Description

Simplify the disconnect operations for the disconnect terminal blocks installed next to fuse terminal blocks ZS4-SF1:

- With the same profile as ZS4-SF1, the ZS4-S-R3 disconnect lever is easily operated by hand and the wiring of the alternated disconnect and fuse circuits is easier.,
- Neutral cartridge CN5 5x25 included.

Ordering details

Description		Color	Type	Part Number		Pkg qty	Weight (1 pce) g
Disconnect	Profile aligned with ZS4-SF1	Grey, orange	ZS4-S-R3	1SNK508416R0000		50	13.30
		Grey, blue	ZS4-S-R3-T2	1SNK508419R0000		50	13.30

Main technical data

Connecting capacity		IEC	UL - CSA
1 conductor per clamp	Rigid: Solid/Stranded	0.2 ... 4 mm²	24 ... 10 AWG
	Flexible without ferrule	0.22 ... 4 mm²	
	Flexible with non insulated ferrule	0.22 ... 4 mm²	24 ... 12 AWG
	Flexible with insulated ferrule	0.22 ... 4 mm²	24 ... 12 AWG
	Gauge	A3-B3	
2 conductors per clamp	Rigid: Solid/Stranded	0.2 ... 2.5 mm²	24 ... 14 AWG
	Flexible without ferrule	0.2 ... 2.5 mm²	
	Flexible with twin ferrule	0.22 ... 2.5 mm²	24 ... 14 AWG
Rated current / Rated cross section		18 A / 2.5 mm²	18 A / 10 AWG
Maximum current / Maximum cross section		18 A / 4 mm²	
Rated short-time withstand current (1s)		300 A	
Rated voltage		630 V	300 V
Impulse withstand voltage		6000 V	
Protection		IP20	NEMA 1

Mounting instructions

Rail	TH 35-7.5, TH 35-15
Wire stripping length	11 mm 0.432 in
Tool	Flat screwdriver Ø 3.5 mm Ø 0.138 in
Torque	0.6 Nm ± 0.1 5.31 lb.in ± 0.885

Recommendation for best usage: in horizontal assemblies, disconnect terminal blocks should be mounted with fixed foot on top (power side) so that the disconnect lever does not partially close through gravity. Furthermore, as specified per IEC 60947-7-1, disconnect terminal blocks are intended to be used for temporary disconnection at zero potential and at no load.

The connecting capacity data for one Rigid: Solid/Stranded, or one Flexible conductor (when applicable) is a mandatory information required by IEC, UL and CSA standards (Copper conductors). All other data are provided as supplementary information only. For more details, please consult our CB, UL or CSA certificates and technical datasheet available on http://www.TE.com

CE | RoHS | USR CNR | CSA | EAC | BV | DNV | Rina

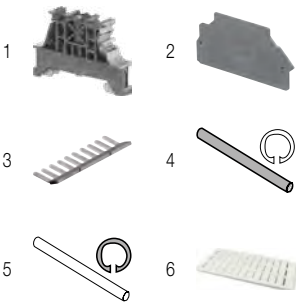

Accessories

	Description			Color	Type	Part Number		Pkg qty	Weight (1 pce) g
1	**End stops**	10 mm	0.394 in	Dark grey	BAM4	1SNK900001R0000		50	14.00
2	**End sections**	1.5 mm	0.059 in	Dark grey	ES4-SF	1SNK508960R0000		20	1.80
3	**Lateral jumper bars**	10 poles	35 A (IEC)	Grey	PC81-10	1SNA173523R1100		10	5.00
4	**Assembly rods**	2 poles			TGA8	1SNA168672R1100		10	1.00
		3 poles			TGA8	1SNA168673R1200		10	1.50
		4 poles			TGA8	1SNA168674R1300		10	2.00
5	**Spring retaining Rings**				ANT	1SNA168675R1400		10	
6	**Terminal block markers**	Blank marker		White	MG-CPM 13 41791	1SNB041791R0612		1680	0.27
		Blank card			MC812	1SNK160000R0000		22	10.00
					MC812PA	1SNK169999R0000		20	14.00
		Universal wire markers holder		Grey	UMH	1SNK900611R0000		10	0.20

Complete list of accessories is indicated in the terminal block datasheet including end stops.
Some accessories such as jumper bars may modify the terminal block's ratings: Complete information available in the accessories section of the catalog.

Fuse screw clamp terminal blocks

Description	Color	Type	Part Number		Pkg qty	Weight (1 pce) g
Fuse	Grey, dark grey	ZS4-SF1	1SNK508410R0000		50	13.30

1SNK161044S0201

Technical data valid for copper conductors only.

ZS4-SF screw clamp terminal blocks
For 5 x 20 fuses - 6 mm 0.236 in spacing

ZS4-SF

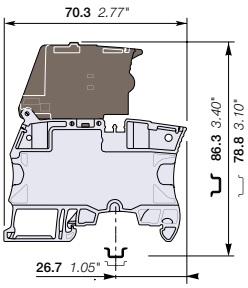

6 mm 0.236 in spacing

4 mm²	10 AWG

Description

- Protect your circuits with 5x20 fuse terminal blocks compliant with IEC 60947-7-3 standard (fuse not supplied with the terminal blocks),
- Simplify the distribution thanks to the two jumper channels aligned with ZS4 or ZS4-R2 feed-through and ZS4-S-R1 disconnect terminal blocks.

Ordering details

Description	Color	Type	Part Number		Pkg qty	Weight (1 pce) g
Fuse	Grey, dark grey	ZS4-SF	1SNK506410R0000		50	18.60

Main technical data

Connecting capacity		IEC	UL - CSA
1 conductor per clamp	Rigid: Solid/Stranded	0.2 ... 4 mm²	24 ... 10 AWG
	Flexible without ferrule	0.22 ... 4 mm²	
	Flexible with non insulated ferrule	0.22 ... 4 mm²	24 ... 12 AWG
	Flexible with insulated ferrule	0.22 ... 4 mm²	24 ... 12 AWG
	Gauge	A3-B3	
2 conductors per clamp	Rigid: Solid/Stranded	0.2 ... 1.5 mm²	24 ... 16 AWG
	Flexible without ferrule	0.2 ... 1.5 mm²	
	Flexible with twin ferrule	0.22 ... 1.5 mm²	24 ... 16 AWG
Rated current / Rated cross section		6.3 A / 4 mm²	10 A / 10 AWG
Rated voltage		500 V	150 V
Impulse withstand voltage		6000 V	
Protection		IP20	NEMA 1

Mounting instructions

Rail	TH 35-7.5, TH 35-15
Wire stripping length	10.5 mm 0.412 in
Tool	Flat screwdriver Ø 3.5 mm Ø 0.138 in
Torque	0.6 Nm ± 0.1 5.31 lb.in ± 0.885

Mount your fuse safely without touching any active part: put the fuse into the hooks of the fuse holder shutter; at the closing of the shutter, the fuse is perfectly in place in the fuse holder.

Separate arrangement		Assembly composed of 1 fuse terminal block in between non fuse terminal blocks	Overload and short-circuit protection	2.5 W
			Exclusive short-circuit protection	4 W
Compound arrangement		Assembly composed of 5 fuse terminal blocks	Overload and short-circuit protection	2.5 W
			Exclusive short-circuit protection	4 W

The connecting capacity data for one Rigid: Solid/Stranded, or one Flexible conductor (when applicable) is a mandatory information required by IEC, UL and CSA standards (Copper conductors). All other data are provided as supplementary information only. For more details, please consult our CB, UL or CSA certificates and technical datasheet available on http://www.TE.com

CE CB RoHS USR CNR CSA EAC BV DNV Rina

Accessories

	Description			Color	Type	Part Number		Pkg qty	Weight (1 pce) g
1	End stops	10 mm	0.394 in	Dark grey	BAM4	1SNK900001R0000		50	14.00
2	Jumper bars	2 poles	41 A (IEC)	Orange	JB6-2	1SNK906302R0000		50	1.30
		3 poles	41 A (IEC)		JB6-3	1SNK906303R0000		50	2.10
		4 poles	41 A (IEC)		JB6-4	1SNK906304R0000		50	2.90
		5 poles	41 A (IEC)		JB6-5	1SNK906305R0000		50	3.60
		10 poles	41 A (IEC)		JB6-10	1SNK906310R0000		20	7.40
3	Test adapters	For test plugs DIA 2 mm 0.079 in		Dark grey	TP2	1SNK900203R0000		20	1.70
		For test plugs DIA 4 mm 0.157 in			TP4	1SNK900205R0000		20	2.40
4	Test connectors	End module, 5.2 mm 0.205 in		Dark grey	TC5-R1	1SNK900201R0000		10	5.20
5	Spacers	0.8 mm	0.031 in	Dark grey	ES-TC6	1SNK900105R0000		10	0.80
6	Terminal block markers	Blank marker		White	MG-CPM 13 41791	1SNB041791R0612		1680	0.27
		Blank card			MC612	1SNK150000R0000		22	10.00
					MC612PA	1SNK159999R0000		20	11.00
		Universal wire markers holder		Grey	UMH	1SNK900611R0000		10	0.20

Complete list of accessories is indicated in the terminal block datasheet including end stops.
Some accessories such as jumper bars may modify the terminal block's ratings: Complete information available in the accessories section of the catalog.

1SNK161005S0201

Technical data valid for copper conductors only.

ZS4-SF-T screw clamp terminal blocks

For 5 x 20 fuses - with test socket - 6 mm 0.236 in spacing

4 mm²
10 AWG

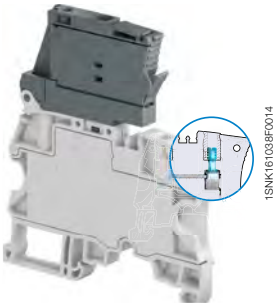

ZS4-SF-T

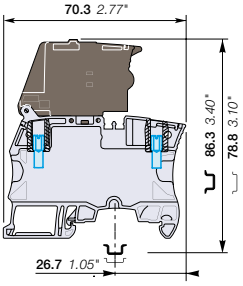

6 mm 0.236 in spacing

Description

- Protect your circuits with 5x20 fuse terminal blocks compliant with IEC 60947-7-3 standard (fuse not supplied with the terminal blocks),
- Simplify the distribution thanks to the two jumper channels aligned with ZS4 or ZS4-R2 feed-through and ZS4-S-R1 disconnect terminal blocks,
- Ease the test with built-in test socket screws.

Ordering details

Description		Color	Type	Part Number		Pkg qty	Weight (1 pce) g
Fuse	With 2 test sockets DIA 2 mm 0.079 in	Grey, dark grey	ZS4-SF-T2	1SNK506411R0000		50	18.60

Main technical data

Connecting capacity		IEC	UL - CSA
1 conductor per clamp	Rigid: Solid/Stranded	0.2 ... 4 mm²	24 ... 10 AWG
	Flexible without ferrule	0.22 ... 4 mm²	
	Flexible with non insulated ferrule	0.22 ... 4 mm²	24 ... 12 AWG
	Flexible with insulated ferrule	0.22 ... 4 mm²	24 ... 12 AWG
	Gauge	A3-B3	
2 conductors per clamp	Rigid: Solid/Stranded	0.2 ... 1.5 mm²	24 ... 16 AWG
	Flexible without ferrule	0.2 ... 1.5 mm²	
	Flexible with twin ferrule	0.22 ... 1.5 mm²	24 ... 16 AWG
Rated current / Rated cross section		6.3 A / 4 mm²	10 A / 10 AWG
Rated voltage		500 V	150 V
Impulse withstand voltage		6000 V	
Protection		IP20	NEMA 1

Mounting instructions

Rail		TH 35-7.5, TH 35-15
Wire stripping length		10.5 mm 0.412 in
Tool		Flat screwdriver Ø 3.5 mm Ø 0.138 in
Torque		0.6 Nm ± 0.1 5.31 lb.in ± 0.885

Mount your fuse safely without touching any active part: put the fuse into the hooks of the fuse holder shutter; at the closing of the shutter, the fuse is perfectly in place in the fuse holder.

Separate arrangement		Assembly composed of 1 fuse terminal block in between non fuse terminal blocks	Overload and short-circuit protection	2.5 W
			Exclusive short-circuit protection	4 W
Compound arrangement		Assembly composed of 5 fuse terminal blocks	Overload and short-circuit protection	2.5 W
			Exclusive short-circuit protection	4 W

The connecting capacity data for one Rigid: Solid/Stranded, or one Flexible conductor (when applicable) is a mandatory information required by IEC, UL and CSA standards (Copper conductors). All other data are provided as supplementary information only. For more details, please consult our CB, UL or CSA certificates and technical datasheet available on http://www.TE.com

CE | CB | RoHS | USR CNR | CSA | EAC | BV | DNV | Rina

Accessories

	Description			Color	Type	Part Number		Pkg qty	Weight (1 pce) g
1	**End stops**	10 mm	0.394 in	Dark grey	BAM4	1SNK900001R0000		50	14.00
2	**Jumper bars**	2 poles	41 A (IEC)	Orange	JB6-2	1SNK906302R0000		50	1.30
		3 poles	41 A (IEC)		JB6-3	1SNK906303R0000		50	2.10
		4 poles	41 A (IEC)		JB6-4	1SNK906304R0000		50	2.90
		5 poles	41 A (IEC)		JB6-5	1SNK906305R0000		50	3.60
		10 poles	41 A (IEC)		JB6-10	1SNK906310R0000		20	7.40
3	**Test connectors**	End module, 5.2 mm 0.205 in		Dark grey	TC5-R1	1SNK900201R0000		10	5.20
4	**Spacers**	0.8 mm	0.031 in	Dark grey	ES-TC6	1SNK900105R0000		10	0.80
5	**Terminal block markers**	Blank marker		White	MG-CPM 13 41791	1SNB041791R0612		1680	0.27
		Blank card			MC612	1SNK150000R0000		22	10.00
					MC612PA	1SNK159999R0000		20	11.00
		Universal wire markers holder		Grey	UMH	1SNK900611R0000		10	0.20

Complete list of accessories is indicated in the terminal block datasheet including end stops.
Some accessories such as jumper bars may modify the terminal block's ratings: Complete information available in the accessories section of the catalog.

8

1SNK161038S0201

Technical data valid for copper conductors only.

ZS4-SF-R screw clamp terminal blocks

For 5 x 20 fuses - with blown fuse indicator - 6 mm 0.236 in spacing

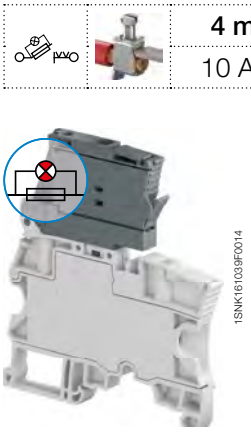

ZS4-SF-R

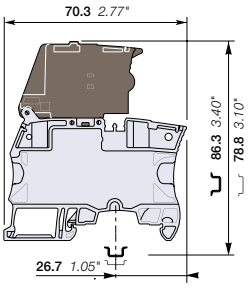

6 mm 0.236 in spacing

4 mm²	
10 AWG	

Description

- Protect your circuits with 5x20 fuse terminal blocks compliant with IEC 60947-7-3 standard (fuse not supplied with the terminal blocks),
- Simplify the distribution thanks to the two jumper channels aligned with ZS4 or ZS4-R2 feed-through and ZS4-S-R1 disconnect terminal blocks,
- Quickly identify the defective circuit thanks to the blown fuse indicator (with leakage current < 0.5 mA).

Ordering details

Description		Color	Type	Part Number		Pkg qty	Weight (1 pce) g
Fuse	With blown fuse indicator 115 ... 250 V AC / DC	Grey, dark grey	ZS4-SF-R3	1SNK506415R0000		50	18.60
	With blown fuse indicator 24 ... 110 V AC / DC		ZS4-SF-R1	1SNK506412R0000		50	18.60

Main technical data

Connecting capacity		IEC	UL - CSA
1 conductor per clamp	Rigid: Solid/Stranded	0.2 ... 4 mm²	24 ... 10 AWG
	Flexible without ferrule	0.22 ... 4 mm²	
	Flexible with non insulated ferrule	0.22 ... 4 mm²	24 ... 12 AWG
	Flexible with insulated ferrule	0.22 ... 4 mm²	24 ... 12 AWG
	Gauge	A3-B3	
2 conductors per clamp	Rigid: Solid/Stranded	0.2 ... 1.5 mm²	24 ... 16 AWG
	Flexible without ferrule	0.2 ... 1.5 mm²	
	Flexible with twin ferrule	0.22 ... 1.5 mm²	24 ... 16 AWG
Rated current / Rated cross section		6.3 A / 4 mm²	10 A / 10 AWG
Rated voltage		500 V	150 V
Impulse withstand voltage		6000 V	
Protection		IP20	NEMA 1

Mounting instructions

Rail	TH 35-7.5, TH 35-15
Wire stripping length	10.5 mm 0.412 in
Tool	Flat screwdriver Ø 3.5 mm Ø 0.138 in
Torque	0.6 Nm ± 0.1 5.31 lb.in ± 0.885

Mount your fuse safely without touching any active part: put the fuse into the hooks of the fuse holder shutter; at the closing of the shutter, the fuse is perfectly in place in the fuse holder.

Separate arrangement	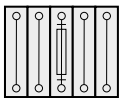	Assembly composed of 1 fuse terminal block in between non fuse terminal blocks	Overload and short-circuit protection	2.5 W
			Exclusive short-circuit protection	4 W
Compound arrangement	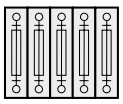	Assembly composed of 5 fuse terminal blocks	Overload and short-circuit protection	2.5 W
			Exclusive short-circuit protection	4 W

The connecting capacity data for one Rigid: Solid/Stranded, or one Flexible conductor (when applicable) is a mandatory information required by IEC, UL and CSA standards (Copper conductors). All other data are provided as supplementary information only. For more details, please consult our CB, UL or CSA certificates and technical datasheet available on http://www.TE.com

CE CB RoHS USR CNR CSA EAC BV DNV Rina

Accessories

	Description			Color	Type	Part Number		Pkg qty	Weight (1 pce) g
1	**End stops**	10 mm	0.394 in	Dark grey	BAM4	1SNK900001R0000		50	14.00
2	**Jumper bars**	2 poles	41 A (IEC)	Orange	JB6-2	1SNK906302R0000		50	1.30
		3 poles	41 A (IEC)		JB6-3	1SNK906303R0000		50	2.10
		4 poles	41 A (IEC)		JB6-4	1SNK906304R0000		50	2.90
		5 poles	41 A (IEC)		JB6-5	1SNK906305R0000		50	3.60
		10 poles	41 A (IEC)		JB6-10	1SNK906310R0000		20	7.40
3	**Test adapters**	For test plugs DIA 2 mm 0.079 in		Dark grey	TP2	1SNK900203R0000		20	1.70
		For test plugs DIA 4 mm 0.157 in			TP4	1SNK900205R0000		20	2.40
4	**Test connectors**	End module, 5.2 mm 0.205 in		Dark grey	TC5-R1	1SNK900201R0000		10	5.20
5	**Spacers**	0.8 mm	0.031 in	Dark grey	ES-TC6	1SNK900105R0000		10	0.80
6	**Terminal block markers**	Blank marker		White	MG-CPM 13 41791	1SNB041791R0612		1680	0.27
		Blank card			MC612	1SNK150000R0000		22	10.00
					MC612PA	1SNK159999R0000		20	11.00
		Universal wire markers holder		Grey	UMH	1SNK900611R0000		10	0.20

Complete list of accessories is indicated in the terminal block datasheet including end stops.
Some accessories such as jumper bars may modify the terminal block's ratings: Complete information available in the accessories section of the catalog.

1SNK161006S0201

Technical data valid for copper conductors only.

ZS4-SF-R screw clamp terminal blocks

For 5 x 20 fuses - with blown fuse indicator and test sockets - 6 mm 0.236 in spacing

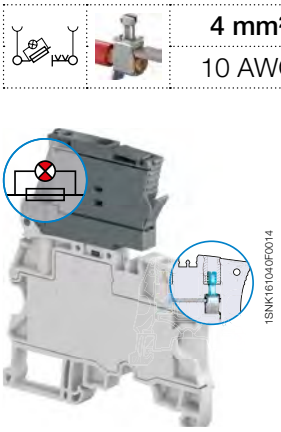

ZS4-SF-R

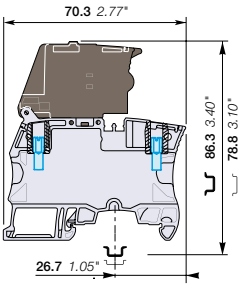

6 mm 0.236 in spacing

4 mm²
10 AWG

Description

- Protect your circuits with 5x20 fuse terminal blocks compliant with IEC 60947-7-3 standard (fuse not supplied with the terminal blocks),
- Simplify the distribution thanks to the two jumper channels aligned with ZS4 or ZS4-R2 feed-through and ZS4-S-R1 disconnect terminal blocks,
- Ease the test with built-in test socket screws,
- Quickly identify the defective circuit thanks to the blown fuse indicator (with leakage current < 0.5 mA).

Ordering details

Description		Color	Type	Part Number		Pkg qty	Weight (1 pce) g
Fuse	With blown fuse indicator 115 ... 250 V AC / DC and 2 test sockets DIA 2 mm 0.079 in	Grey, dark grey	ZS4-SF-R4	1SNK506416R0000		50	18.60
	With blown fuse indicator 24 ... 110 V AC / DC and 2 test sockets DIA 2 mm 0.079 in		ZS4-SF-R2	1SNK506413R0000		50	18.60

Main technical data

Connecting capacity		IEC	UL - CSA
1 conductor per clamp	Rigid: Solid/Stranded	0.2 ... 4 mm²	24 ... 10 AWG
	Flexible without ferrule	0.22 ... 4 mm²	
	Flexible with non insulated ferrule	0.22 ... 4 mm²	24 ... 12 AWG
	Flexible with insulated ferrule	0.22 ... 4 mm²	24 ... 12 AWG
	Gauge	A3-B3	
2 conductors per clamp	Rigid: Solid/Stranded	0.2 ... 1.5 mm²	24 ... 16 AWG
	Flexible without ferrule	0.2 ... 1.5 mm²	
	Flexible with twin ferrule	0.22 ... 1.5 mm²	24 ... 16 AWG
Rated current / Rated cross section		6.3 A / 4 mm²	10 A / 10 AWG
Rated voltage		500 V	150 V
Impulse withstand voltage		6000 V	
Protection		IP20	NEMA 1

Mounting instructions

Rail	TH 35-7.5, TH 35-15
Wire stripping length	10.5 mm 0.412 in
Tool	Flat screwdriver Ø 3.5 mm Ø 0.138 in
Torque	0.6 Nm ± 0.1 5.31 lb.in ± 0.885

Mount your fuse safely without touching any active part: put the fuse into the hooks of the fuse holder shutter; at the closing of the shutter, the fuse is perfectly in place in the fuse holder.

Separate arrangement		Assembly composed of 1 fuse terminal block in between non fuse terminal blocks	Overload and short-circuit protection	2.5 W
			Exclusive short-circuit protection	4 W
Compound arrangement		Assembly composed of 5 fuse terminal blocks	Overload and short-circuit protection	2.5 W
			Exclusive short-circuit protection	4 W

The connecting capacity data for one Rigid: Solid/Stranded, or one Flexible conductor (when applicable) is a mandatory information required by IEC, UL and CSA standards (Copper conductors). All other data are provided as supplementary information only. For more details, please consult our CB, UL or CSA certificates and technical datasheet available on http://www.TE.com

CE CB RoHS USR CNR CSA EAC BV DNV Rina

Accessories

	Description			Color	Type	Part Number		Pkg qty	Weight (1 pce) g
1	**End stops**	10 mm	0.394 in	Dark grey	BAM4	1SNK900001R0000		50	14.00
2	**Jumper bars**	2 poles	41 A (IEC)	Orange	JB6-2	1SNK906302R0000		50	1.30
		3 poles	41 A (IEC)		JB6-3	1SNK906303R0000		50	2.10
		4 poles	41 A (IEC)		JB6-4	1SNK906304R0000		50	2.90
		5 poles	41 A (IEC)		JB6-5	1SNK906305R0000		50	3.60
		10 poles	41 A (IEC)		JB6-10	1SNK906310R0000		20	7.40
3	**Test connectors**	End module, 5.2 mm 0.205 in		Dark grey	TC5-R1	1SNK900201R0000		10	5.20
4	**Spacers**	0.8 mm	0.031 in	Dark grey	ES-TC6	1SNK900105R0000		10	0.80
5	**Terminal block markers**	Blank marker		White	MG-CPM 13 41791	1SNB041791R0612		1680	0.27
		Blank card			MC612	1SNK150000R0000		22	10.00
					MC612PA	1SNK159999R0000		20	11.00
		Universal wire markers holder		Grey	UMH	1SNK900611R0000		10	0.20

Complete list of accessories is indicated in the terminal block datasheet including end stops.
Some accessories such as jumper bars may modify the terminal block's ratings: Complete information available in the accessories section of the catalog.

1SNK161037S0201

Technical data valid for copper conductors only.

ZS4-R2 screw clamp terminal blocks
Feed-through - 6 mm 0.236 in spacing

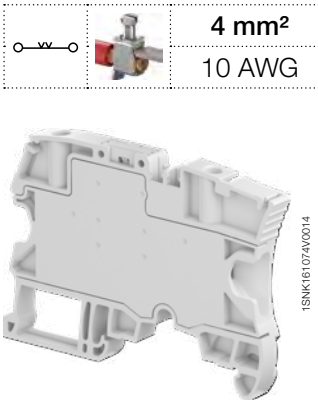

ZS4-R2

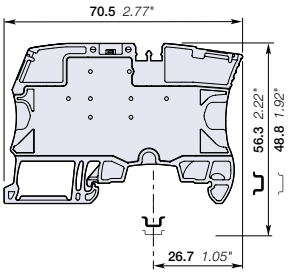

6 mm 0.236 in spacing

	4 mm²
	10 AWG

Description

- Simplify the distribution of circuits in marshalling cabinets thanks to our feed-through terminal blocks with the same profile as ZS4-SF fuse, ZS4-S-R1 disconnect and ZS4-PE-R2 ground terminal blocks: aligned conductor entries, jumper channels and marking in just 6 mm 0.236 in spacing,
- No end section needed: closed block.

Ordering details

Description		Color	Type	Part Number		Pkg qty	Weight (1 pce) g
Feed-through	Profile aligned with ZS4-SF and ZS4-S-R1	Grey	ZS4-R2	1SNK506013R0000		50	12.40

Main technical data

Connecting capacity		IEC	UL - CSA
1 conductor per clamp	Rigid: Solid/Stranded	0.2 ... 4 mm²	24 ... 10 AWG
	Flexible without ferrule	0.22 ... 4 mm²	
	Flexible with non insulated ferrule	0.22 ... 4 mm²	24 ... 12 AWG
	Flexible with insulated ferrule	0.22 ... 4 mm²	24 ... 12 AWG
	Gauge	A3-B3	
2 conductors per clamp	Rigid: Solid/Stranded	0.2 ... 1.5 mm²	24 ... 16 AWG
	Flexible without ferrule	0.2 ... 1.5 mm²	
	Flexible with twin ferrule	0.22 ... 1.5 mm²	24 ... 16 AWG
Rated current / Rated cross section		32 A / 4 mm²	30 A / 10 AWG
Rated short-time withstand current (1s)		480 A	
Rated voltage		800 V	300 V
Impulse withstand voltage		8000 V	
Protection		IP20	NEMA 1

Mounting instructions

Rail	TH 35-7.5, TH 35-15
Wire stripping length	10.5 mm 0.413 in
Tool	Flat screwdriver Ø 3.5 mm Ø 0.138 in
Torque	0.6 Nm ± 0.1 5.31 lb.in ± 0.885

The connecting capacity data for one Rigid: Solid/Stranded, or one Flexible conductor (when applicable) is a mandatory information required by IEC, UL and CSA standards (Copper conductors). All other data are provided as supplementary information only. For more details, please consult our CB, UL or CSA certificates and technical datasheet available on http://www.TE.com

CE, CB, RoHS, USR CNR, CSA, EAC, BV, DNV

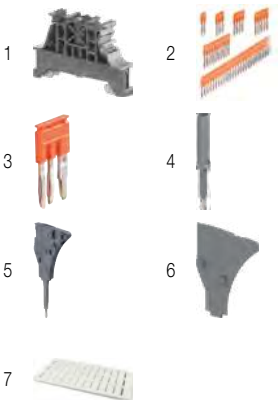

Accessories

	Description			Color	Type	Part Number		Pkg qty	Weight (1 pce) g
1	**End stops**	10 mm	0.394 in	Dark grey	BAM4	1SNK900001R0000		50	14.00
2	**Jumper bars**	2 poles	41 A (IEC)	Orange	JB6-2	1SNK906302R0000		50	1.30
		3 poles	41 A (IEC)		JB6-3	1SNK906303R0000		50	2.10
		4 poles	41 A (IEC)		JB6-4	1SNK906304R0000		50	2.90
		5 poles	41 A (IEC)		JB6-5	1SNK906305R0000		50	3.60
		10 poles	41 A (IEC)		JB6-10	1SNK906310R0000		20	7.40
3	**Cross spacing jumpers**	3 poles	32 A (IEC)	Orange	JB85-3	1SNK900603R0000		10	2.80
4	**Test adapters**	For test plugs DIA 2 mm 0.079 in		Dark grey	TP2	1SNK900203R0000		20	1.70
		For test plugs DIA 4 mm 0.157 in			TP4	1SNK900205R0000		20	2.40
5	**Test connectors**	End module, 5.2 mm 0.205 in		Dark grey	TC5-R1	1SNK900201R0000		10	5.20
6	**Spacers**	0.8 mm	0.031 in	Dark grey	ES-TC6	1SNK900105R0000		10	0.80
7	**Terminal block markers**	Blank marker		White	MG-CPM 13 41791	1SNB041791R0612		1680	0.27
		Blank card			MC612	1SNK150000R0000		22	10.00
					MC612PA	1SNK159999R0000		20	11.00
		Universal wire markers holder		Grey	UMH	1SNK900611R0000		10	0.20

Complete list of accessories is indicated in the terminal block datasheet including end stops.
Some accessories such as jumper bars may modify the terminal block's ratings: Complete information available in the accessories section of the catalog.

ZS4-SF ZS4-S-R1

Screw clamp terminal blocks

Description		Color	Type	Part Number		Pkg qty	Weight (1 pce) g
Fuse	Profile aligned with ZS4-R2 and ZS4-PE-R2	Grey, dark grey	ZS4-SF	1SNK506410R0000		50	18.60
Disconnect	Profile aligned with ZS4-R2 and ZS4-PE-R2	Grey	ZS4-S-R1	1SNK506310R0000		50	13.20

Technical data valid for copper conductors only.

1SNK161083S0201

ZS4-PE-R2 screw clamp terminal blocks
Ground - 6 mm 0.236 in spacing

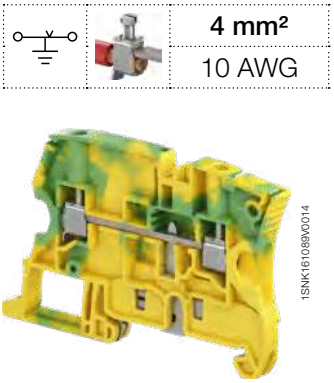

4 mm²	
10 AWG	

1SNK161089V0014

ZS4-PE-R2

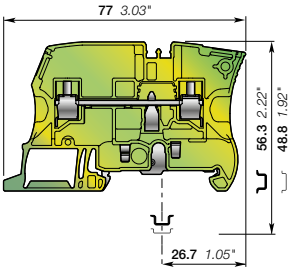

6 mm 0.236 in spacing

Description

Simplify the shielding connection of your analog circuits in marshalling cabinets thanks to our ground terminal blocks with the same profile as ZS4-SF fuse, ZS4-S-R1 disconnect and ZS4-R2 feed-through terminal blocks.

Ordering details

Description		Color	Type	Part Number		Pkg qty	Weight (1 pce) g
Ground	Screwless rail connection	Green-yellow	ZS4-PE-R2	1SNK506153R0000		25	15.30

Main technical data

Connecting capacity		IEC	UL - CSA
1 conductor per clamp	Rigid: Solid/Stranded	0.2 ... 4 mm²	24 ... 10 AWG
	Flexible without ferrule	0.22 ... 4 mm²	
	Flexible with non insulated ferrule	0.22 ... 4 mm²	24 ... 12 AWG
	Flexible with insulated ferrule	0.22 ... 4 mm²	24 ... 12 AWG
	Gauge	A3-B3	
Rated cross section		4 mm²	10 AWG
Rated short-time withstand current (1s)		480 A	396 A
Protection		IP20	NEMA 1

Mounting instructions

Rail	TH 35-7.5, TH 35-15
Wire stripping length	10.5 mm 0.413 in
Tool	Flat screwdriver Ø 3.5 mm Ø 0.138 in
Torque	0.6 Nm ± 0.1 5.31 lb.in ± 0.885

The connecting capacity data for one Rigid: Solid/Stranded, or one Flexible conductor (when applicable) is a mandatory information required by IEC, UL and CSA standards (Copper conductors). All other data are provided as supplementary information only. For more details, please consult our CB, UL or CSA certificates and technical datasheet available on http://www.TE.com

CE, CB, RoHS, USR CNR, CSA, EAC, BV, DNV

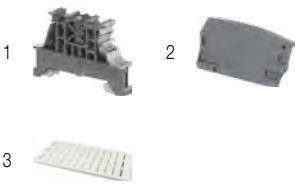

Accessories

	Description			Color	Type	Part Number		Pkg qty	Weight (1 pce) g
1	**End stops**	10 mm	0.394 in	Dark grey	BAM4	1SNK900001R0000		50	14.00
2	**End sections**	2.2 mm	0.087 in	Dark grey	ES6-4S	1SNK505911R0000		20	3.10
3	**Terminal block markers**	Blank marker		White	MG-CPM 13 41791	1SNB041791R0612		1680	0.27
		Blank card			MC612	1SNK150000R0000		22	10.00
					MC612PA	1SNK159999R0000		20	11.00
		Universal wire markers holder		Grey	UMH	1SNK900611R0000		10	0.20

Complete list of accessories is indicated in the terminal block datasheet including end stops.
Some accessories such as jumper bars may modify the terminal block's ratings: Complete information available in the accessories section of the catalog.

ZS4-SF ZS4-S-R1

Screw clamp terminal blocks

Description		Color	Type	Part Number		Pkg qty	Weight (1 pce) g
Fuse	Profile aligned with ZS4-R2 and ZS4-PE-R2	Grey, dark grey	ZS4-SF	1SNK506410R0000		50	18.60
Disconnect	Profile aligned with ZS4-R2 and ZS4-PE-R2	Grey	ZS4-S-R1	1SNK506310R0000		50	13.20

1SNK161079S0201

Technical data valid for copper conductors only.

ZS4-S-R2 screw clamp terminal blocks

Disconnect with lever - 6 mm 0.236 in spacing

4 mm²
10 AWG

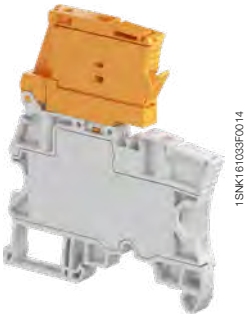

ZS4-S-R2

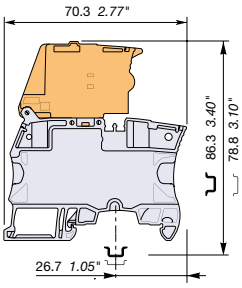

6 mm 0.236 in spacing

Description

Simplify the disconnect operations for the disconnect terminal blocks installed next to fuse terminal blocks ZS4-SF:

– With the same profile as ZS4-SF, the ZS4-S-R2 disconnect lever is easily operated by hand and the wiring of the alternated disconnect and fuse circuits is easier.

Ordering details

Description		Color	Type	Part Number		Pkg qty	Weight (1 pce) g
Disconnect	Profile aligned with ZS4-SF	Grey, orange	ZS4-S-R2	1SNK506414R0000		50	21.6

Main technical data

Connecting capacity		IEC	UL - CSA
1 conductor per clamp	Rigid: Solid/Stranded	0.2 ... 4 mm²	24 ... 10 AWG
	Flexible without ferrule	0.22 ... 4 mm²	
	Flexible with non insulated ferrule	0.22 ... 4 mm²	24 ... 12 AWG
	Flexible with insulated ferrule	0.22 ... 4 mm²	24 ... 12 AWG
	Gauge	A3-B3	
2 conductors per clamp	Rigid: Solid/Stranded	0.2 ... 1.5 mm²	24 ... 16 AWG
	Flexible without ferrule	0.2 ... 1.5 mm²	
	Flexible with twin ferrule	0.22 ... 1.5 mm²	24 ... 16 AWG
Rated current / Rated cross section		18 A / 2.5 mm²	13 A / 10 AWG
Maximum current / Maximum cross section		18 A / 4 mm²	
Rated short-time withstand current (1s)		300 A	
Rated voltage		400 V	150 V
Impulse withstand voltage		6000 V	
Protection		IP20	NEMA 1

Mounting instructions

Rail		TH 35-7.5, TH 35-15
Wire stripping length		10.5 mm 0.412 in
Tool		Flat screwdriver Ø 3.5 mm Ø 0.138 in
Torque		0.6 Nm ± 0.1 5.31 lb.in ± 0.885

Recommendation for best usage: in horizontal assemblies, disconnect terminal blocks should be mounted with fixed foot on top (power side) so that the disconnect lever does not partially close through gravity. Furthermore, as specified per IEC 60947-7-1, disconnect terminal blocks are intended to be used for temporary disconnection at zero potential and at no load.

The connecting capacity data for one Rigid: Solid/Stranded, or one Flexible conductor (when applicable) is a mandatory information required by IEC, UL and CSA standards (Copper conductors). All other data are provided as supplementary information only. For more details, please consult our CB, UL or CSA certificates and technical datasheet available on http://www.TE.com

CE | CB | RoHS | USR CNR | CSA | EAC | BV | DNV | Rina

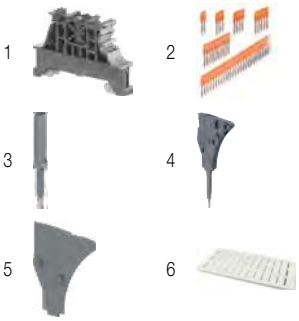

Accessories

	Description			Color	Type	Part Number		Pkg qty	Weight (1 pce) g
1	**End stops**	10 mm	0.394 in	Dark grey	BAM4	1SNK900001R0000		50	14.00
2	**Jumper bars**	2 poles	41 A (IEC)	Orange	JB6-2	1SNK906302R0000		50	1.30
		3 poles	41 A (IEC)		JB6-3	1SNK906303R0000		50	2.10
		4 poles	41 A (IEC)		JB6-4	1SNK906304R0000		50	2.90
		5 poles	41 A (IEC)		JB6-5	1SNK906305R0000		50	3.60
		10 poles	41 A (IEC)		JB6-10	1SNK906310R0000		20	7.40
3	**Test adapters**	For test plugs DIA 2 mm 0.079 in		Dark grey	TP2	1SNK900203R0000		20	1.70
		For test plugs DIA 4 mm 0.157 in			TP4	1SNK900205R0000		20	2.40
4	**Test connectors**	End module, 5.2 mm 0.205 in		Dark grey	TC5-R1	1SNK900201R0000		10	5.20
5	**Spacers**	0.8 mm	0.031 in	Dark grey	ES-TC6	1SNK900105R0000		10	0.80
6	**Terminal block markers**	Blank marker		White	MG-CPM 13 41791	1SNB041791R0612		1680	0.27
		Blank card			MC612	1SNK150000R0000		22	10.00
					MC612PA	1SNK159999R0000		20	11.00
		Universal wire markers holder		Grey	UMH	1SNK900611R0000		10	0.20

Complete list of accessories is indicated in the terminal block datasheet including end stops.
Some accessories such as jumper bars may modify the terminal block's ratings: Complete information available in the accessories section of the catalog.

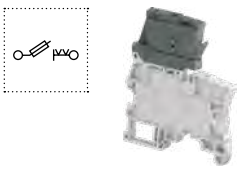

Fuse screw clamp terminal blocks

Description	Color	Type	Part Number		Pkg qty	Weight (1 pce) g
Fuse	Grey, dark grey	ZS4-SF	1SNK506410R0000		50	18.60

1SNK161043S0201

Technical data valid for copper conductors only.

ZS10-SF screw clamp terminal blocks

For 6.3x32 fuses - 8 mm 0.315 in spacing

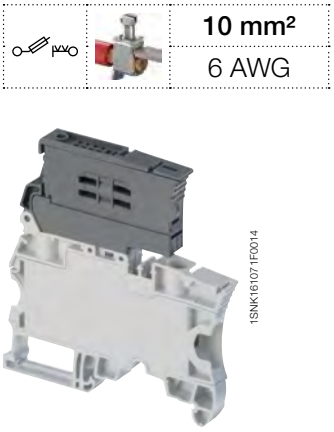

10 mm²	
6 AWG	

1SNK161071F0014

ZS10-SF

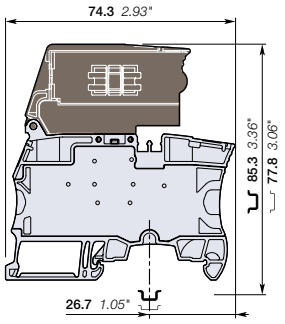

8 mm 0.315 in spacing

Description

- Protect your circuits with 6.3x32 (¼ x 1¼ in) fuse terminal blocks compliant with IEC 60947-7-3 standard (fuse not supplied with the terminal blocks),
- Simplify the distribution thanks to the two jumper channels.

Ordering details

Description		Color	Type	Part Number		Pkg qty	Weight (1 pce) g
Fuse	Closed block	Grey, dark grey	ZS10-SF	1SNK508418R0000		50	28.50

Main technical data

Connecting capacity		IEC	UL - CSA
1 conductor per clamp	Rigid: Solid/Stranded	0.5 ... 10 mm²	24 ... 6 AWG
	Flexible without ferrule	0.5 ... 10 mm²	
	Flexible with non insulated ferrule	0.5 ... 10 mm²	24 ... 8 AWG
	Flexible with insulated ferrule	0.5 ... 6 mm²	24 ... 10 AWG
	Gauge	A5-B5	
2 conductors per clamp	Rigid: Solid/Stranded	0.5 ... 4 mm²	20 ... 12 AWG
	Flexible without ferrule	0.5 ... 4 mm²	
	Flexible with twin ferrule	0.5 ... 4 mm²	20 ... 12 AWG
Rated current / Rated cross section		10 A / 10 mm²	22 A / 6 AWG
Rated voltage		630 V	600 V
Impulse withstand voltage		6000 V	
Protection		IP20	NEMA 1

Mounting instructions

Rail		TH 35-7.5, TH 35-15
Wire stripping length		13 mm 0.512 in
Tool		Flat screwdriver Ø 4 mm Ø 0.157 in
Torque		1.3 Nm ± 0.3 11.5 lb.in ± 2.65

Mount your fuse safely without touching any active part: put the fuse into the hooks of the fuse holder shutter; at the closing of the shutter, the fuse is perfectly in place in the fuse holder.

Separate arrangement		Assembly composed of 1 fuse terminal block in between non fuse terminal blocks	Overload and short-circuit protection	4 W
			Exclusive short-circuit protection	4 W
Compound arrangement		Assembly composed of 5 fuse terminal blocks	Overload and short-circuit protection	2.5 W
			Exclusive short-circuit protection	2.5 W

The connecting capacity data for one Rigid: Solid/Stranded, or one Flexible conductor (when applicable) is a mandatory information required by IEC, UL and CSA standards (Copper conductors). All other data are provided as supplementary information only. For more details, please consult our CB, UL or CSA certificates and technical datasheet available on http://www.TE.com

CE CB RoHS USR CNR CSA EAC BV DNV

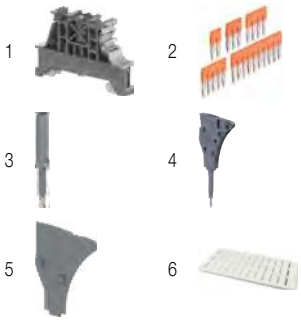

Accessories

	Description			Color	Type	Part Number		Pkg qty	Weight (1 pce) g
1	**End stops**	10 mm	0.394 in	Dark grey	BAM4	1SNK900001R0000		50	14.00
2	**Jumper bars**	2 poles	57 A (IEC)	Orange	JB8-2	1SNK908302R0000		50	2.70
		3 poles	57 A (IEC)		JB8-3	1SNK908303R0000		50	4.10
		4 poles	57 A (IEC)		JB8-4	1SNK908304R0000		50	5.60
		5 poles	57 A (IEC)		JB8-5	1SNK908305R0000		40	7.00
		10 poles	57 A (IEC)		JB8-10	1SNK908310R0000		20	14.20
3	**Test adapters**	For test plugs DIA 2 mm 0.079 in		Dark grey	TP2	1SNK900203R0000		20	1.70
		For test plugs DIA 4 mm 0.157 in			TP4	1SNK900205R0000		20	2.40
4	**Test connectors**	5.2 mm 0.205 in spacing		Dark grey	TC5	1SNK900200R0000		10	5.20
		End module, 5.2 mm 0.205 in			TC5-R1	1SNK900201R0000		10	5.20
5	**Spacers**	2.8 mm	0.110 in	Dark grey	ES-TC8	1SNK900104R0000		10	1.40
6	**Terminal block markers**	Blank marker		White	MG-CPM 13 41791	1SNB041791R0612		1680	0.27
		Blank card			MC812	1SNK160000R0000		22	10.00
					MC812PA	1SNK169999R0000		20	14.00
		Universal wire markers holder		Grey	UMH	1SNK900611R0000		10	0.20

Complete list of accessories is indicated in the terminal block datasheet including end stops.
Some accessories such as jumper bars may modify the terminal block's ratings: Complete information available in the accessories section of the catalog.

8

1SNK161052S0201

Technical data valid for copper conductors only.

ZS10-SF-R screw clamp terminal blocks

For 6.3x32 fuses - with blown fuse indicator - 8 mm 0.315 in spacing

ZS10-SF-R

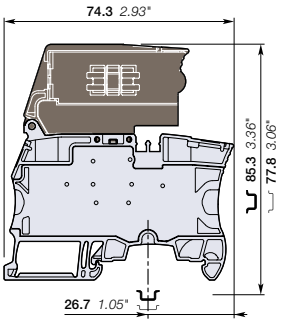

8 mm 0.315 in spacing

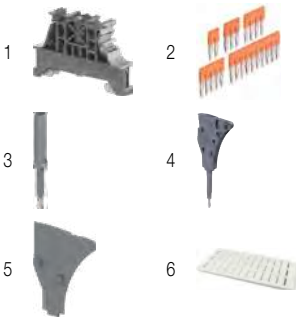

	10 mm²
	6 AWG

Description

- Protect your circuits with 6.3x32 (¼ x 1¼ in) fuse terminal blocks compliant with IEC 60947-7-3 standard (fuse not supplied with the terminal blocks),
- Quickly identify the defective circuit thanks to the blown fuse indicator (with leakage current < 0.5 mA).

Ordering details

Description		Color	Type	Part Number		Pkg qty	Weight (1 pce) g
Fuse	With blown fuse indicator 115 ... 250 V AC / DC	Grey, dark grey	ZS10-SF-R3	1SNK508422R0000		50	30.50
	With blown fuse indicator 24 ... 110 V AC / DC		ZS10-SF-R1	1SNK508421R0000		50	30.50

Main technical data

Connecting capacity		IEC	UL - CSA
1 conductor per clamp	Rigid: Solid/Stranded	0.5 ... 10 mm²	24 ... 6 AWG
	Flexible without ferrule	0.5 ... 10 mm²	
	Flexible with non insulated ferrule	0.5 ... 10 mm²	24 ... 8 AWG
	Flexible with insulated ferrule	0.5 ... 6 mm²	24 ... 10 AWG
	Gauge	A5-B5	
2 conductors per clamp	Rigid: Solid/Stranded	0.5 ... 4 mm²	20 ... 12 AWG
	Flexible without ferrule	0.5 ... 4 mm²	
	Flexible with twin ferrule	0.5 ... 4 mm²	20 ... 12 AWG
Rated current / Rated cross section		10 A / 10 mm²	22 A / 6 AWG
Rated voltage		630 V	600 V
Impulse withstand voltage		6000 V	
Protection		IP20	NEMA 1

Mounting instructions

Rail	TH 35-7.5, TH 35-15
Wire stripping length	13 mm 0.512 in
Tool	Flat screwdriver Ø 4 mm Ø 0.157 in
Torque	1.3 Nm ± 0.3 11.5 lb.in ± 2.65

Mount your fuse safely without touching any active part: put the fuse into the hooks of the fuse holder shutter; at the closing of the shutter, the fuse is perfectly in place in the fuse holder.

Separate arrangement		Assembly composed of 1 fuse terminal block in between non fuse terminal blocks	Overload and short-circuit protection	4 W
			Exclusive short-circuit protection	4 W
Compound arrangement		Assembly composed of 5 fuse terminal blocks	Overload and short-circuit protection	2.5 W
			Exclusive short-circuit protection	2.5 W

The connecting capacity data for one Rigid: Solid/Stranded, or one Flexible conductor (when applicable) is a mandatory information required by IEC, UL and CSA standards (Copper conductors). All other data are provided as supplementary information only. For more details, please consult our CB, UL or CSA certificates and technical datasheet available on http://www.TE.com

CE, CB, RoHS, USR CNR, CSA, EAC, BV, DNV

Accessories

	Description			Color	Type	Part Number		Pkg qty	Weight (1 pce) g
1	**End stops**	10 mm	0.394 in	Dark grey	BAM4	1SNK900001R0000		50	14.00
2	**Jumper bars**	2 poles	57 A (IEC)	Orange	JB8-2	1SNK908302R0000		50	2.70
		3 poles	57 A (IEC)		JB8-3	1SNK908303R0000		50	4.10
		4 poles	57 A (IEC)		JB8-4	1SNK908304R0000		50	5.60
		5 poles	57 A (IEC)		JB8-5	1SNK908305R0000		40	7.00
		10 poles	57 A (IEC)		JB8-10	1SNK908310R0000		20	14.20
3	**Test adapters**	For test plugs DIA 2 mm 0.079 in		Dark grey	TP2	1SNK900203R0000		20	1.70
		For test plugs DIA 4 mm 0.157 in			TP4	1SNK900205R0000		20	2.40
4	**Test connectors**	5.2 mm 0.205 in spacing		Dark grey	TC5	1SNK900200R0000		10	5.20
		End module, 5.2 mm 0.205 in			TC5-R1	1SNK900201R0000		10	5.20
5	**Spacers**	2.8 mm	0.110 in	Dark grey	ES-TC8	1SNK900104R0000		10	1.40
6	**Terminal block markers**	Blank marker		White	MG-CPM 13 41791	1SNB041791R0612		1680	0.27
		Blank card			MC812	1SNK160000R0000		22	10.00
					MC812PA	1SNK169999R0000		20	14.00
		Universal wire markers holder		Grey	UMH	1SNK900611R0000		10	0.20

Complete list of accessories is indicated in the terminal block datasheet including end stops.
Some accessories such as jumper bars may modify the terminal block's ratings: Complete information available in the accessories section of the catalog.

1SNK161053S0201

Technical data valid for copper conductors only.

ZS10-S-R2 screw clamp terminal blocks

Disconnect with lever - 8 mm 0.315 in spacing

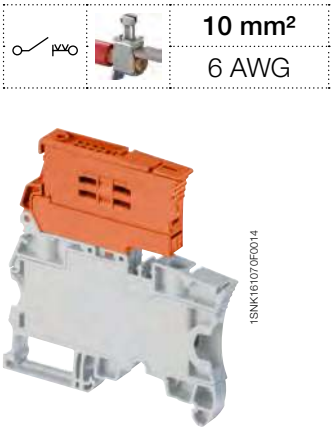

10 mm²
6 AWG

1SNK16107F0014

ZS10-S-R2

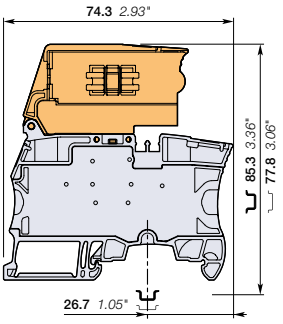

8 mm 0.315 in spacing

Description

Simplify the disconnect operations for the disconnect terminal blocks installed next to fuse terminal blocks ZS10-SF:

– With the same profile as ZS10-SF, the ZS10-S-R2 disconnect lever is easily operated by hand and the wiring of the alternated disconnect and fuse circuits is easier.

Ordering details

Description		Color	Type	Part Number		Pkg qty	Weight (1 pce) g
Disconnect	Profile aligned with ZS10-SF	Grey, orange	ZS10-S-R2	1SNK508417R0000		50	35.90

Main technical data

Connecting capacity		IEC	UL - CSA
1 conductor per clamp	Rigid: Solid/Stranded	0.5 ... 10 mm²	24 ... 6 AWG
	Flexible without ferrule	0.5 ... 10 mm²	
	Flexible with non insulated ferrule	0.5 ... 10 mm²	24 ... 8 AWG
	Flexible with insulated ferrule	0.5 ... 6 mm²	24 ... 10 AWG
	Gauge	A5-B5	
2 conductors per clamp	Rigid: Solid/Stranded	0.5 ... 4 mm²	20 ... 12 AWG
	Flexible without ferrule	0.5 ... 4 mm²	
	Flexible with twin ferrule	0.5 ... 4 mm²	20 ... 12 AWG
Rated current / Rated cross section		10 A / 4 mm²	22 A / 25 AWG
Maximum current / Maximum cross section		25 A / 10 mm²	
Rated short-time withstand current (1s)		480 A	
Rated voltage		630 V	600 V
Impulse withstand voltage		6000 V	
Protection		IP20	NEMA 1

Mounting instructions

Rail	TH 35-7.5, TH 35-15
Wire stripping length	13 mm 0.512 in
Tool	Flat screwdriver Ø 4 mm Ø 0.157 in
Torque	1.3 Nm ± 0.3 11.5 lb.in ± 2.65

Recommendation for best usage: in horizontal assemblies, disconnect terminal blocks should be mounted with fixed foot on top (power side) so that the disconnect lever does not partially close through gravity. Furthermore, as specified per IEC 60947-7-1, disconnect terminal blocks are intended to be used for temporary disconnection at zero potential and at no load.

The connecting capacity data for one Rigid: Solid/Stranded, or one Flexible conductor (when applicable) is a mandatory information required by IEC, UL and CSA standards (Copper conductors). All other data are provided as supplementary information only. For more details, please consult our CB, UL or CSA certificates and technical datasheet available on http://www.TE.com

CE, CB, RoHS, USR CNR, CSA, EAC, BV, DNV

Accessories

	Description			Color	Type	Part Number		Pkg qty	Weight (1 pce) g
1	**End stops**	10 mm	0.394 in	Dark grey	BAM4	1SNK900001R0000		50	14.00
2	**Jumper bars**	2 poles	57 A (IEC)	Orange	JB8-2	1SNK908302R0000		50	2.70
		3 poles	57 A (IEC)		JB8-3	1SNK908303R0000		50	4.10
		4 poles	57 A (IEC)		JB8-4	1SNK908304R0000		50	5.60
		5 poles	57 A (IEC)		JB8-5	1SNK908305R0000		40	7.00
		10 poles	57 A (IEC)		JB8-10	1SNK908310R0000		20	14.20
3	**Test adapters**	For test plugs DIA 2 mm 0.079 in		Dark grey	TP2	1SNK900203R0000		20	1.70
		For test plugs DIA 4 mm 0.157 in			TP4	1SNK900205R0000		20	2.40
4	**Test connectors**	5.2 mm 0.205 in spacing		Dark grey	TC5	1SNK900200R0000		10	5.20
		End module, 5.2 mm 0.205 in			TC5-R1	1SNK900201R0000		10	5.20
5	**Spacers**	2.8 mm	0.110 in	Dark grey	ES-TC8	1SNK900104R0000		10	1.40
6	**Terminal block markers**	Blank marker		White	MG-CPM 13 41791	1SNB041791R0612		1680	0.27
		Blank card			MC812	1SNK160000R0000		22	10.00
					MC812PA	1SNK169999R0000		20	14.00
		Universal wire markers holder		Grey	UMH	1SNK900611R0000		10	0.20

Complete list of accessories is indicated in the terminal block datasheet including end stops.
Some accessories such as jumper bars may modify the terminal block's ratings: Complete information available in the accessories section of the catalog.

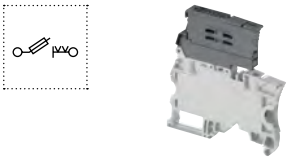

Fuse screw clamp terminal blocks

Description		Color	Type	Part Number		Pkg qty	Weight (1 pce) g
Fuse	Closed block	Grey, dark grey	ZS10-SF	1SNK508418R0000		50	28.50

1SNK161055S0201

Technical data valid for copper conductors only.

ZS4-D2 screw clamp terminal blocks

Double deck with 2 feed-through circuits - 5.2 mm 0.205 in spacing

ZS4-D2

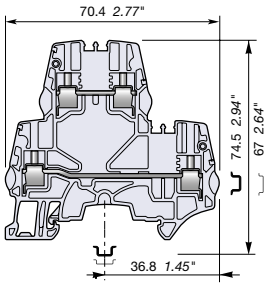

5.2 mm 0.205 in spacing

	4 mm²
	12 AWG

Description

- Save space with double deck terminal blocks: 2 independent circuits connected in just 5.2 mm 0.205 in spacing,
- Customize yourself the ZS4-D2 by soldering electronic components (up to 8.8 mm x 3.2 mm 0.346 x 0.125 in) in the existing linking bars punching.

Ordering details

Description		Color	Type	Part Number		Pkg qty	Weight (1 pce) g
Feed-through	2 feed-through circuits	Grey	ZS4-D2	1SNK505210R0000		50	15.30
		Blue	ZS4-D2-BL	1SNK505220R0000		50	15.30
		Orange	ZS4-D2-OR	1SNK505230R0000		50	15.30

Main technical data

Connecting capacity		IEC	UL - CSA
1 conductor per clamp	Rigid: Solid/Stranded	0.2 ... 4 mm²	24 ... 12 AWG
	Flexible without ferrule	0.22 ... 4 mm²	
	Flexible with non insulated ferrule	0.22 ... 4 mm²	24 ... 12 AWG
	Flexible with insulated ferrule	0.22 ... 2.5 mm²	24 ... 14 AWG
	Gauge	A3-B3	
2 conductors per clamp	Rigid: Solid/Stranded	0.2 ... 1.5 mm²	24 ... 16 AWG
	Flexible without ferrule	0.2 ... 1.5 mm²	
	Flexible with twin ferrule	0.22 ... 1.5 mm²	24 ... 16 AWG
Rated current / Rated cross section		29 A / 4 mm²	20 A / 12 AWG
Rated short-time withstand current (1s)		480 A	
Short Circuit Current Rating (with specific conditions)			100 kA
Rated voltage		800 V	300 V
Impulse withstand voltage		8000 V	
Protection		IP20	NEMA 1
Increased safety Ex e		440 V 29 A IEC/EN 60079-7 - IM2 II 2 GD Ex eb I/II/IIIC – 300 V 20 A UL 60079-7 - Class I, Zone 1, AEx e II, Ex e II U	

Mounting instructions

Rail	TH 35-7.5, TH 35-15
Wire stripping length	10 mm 0.393 in
Tool	Flat screwdriver Ø 3.5 mm Ø 0.138 in
Torque	0.6 Nm ± 0.1 5.31 lb.in ± 0.885

The connecting capacity data for one Rigid: Solid/Stranded, or one Flexible conductor (when applicable) is a mandatory information required by IEC, UL and CSA standards (Copper conductors). All other data are provided as supplementary information only. For more details, please consult our CB, UL or CSA certificates and technical datasheet available on http://www.TE.com

CE, CB, RoHS, USR CNR, CSA, EAC Ex, ATEX, IECEx, BR-Ex e II, Haz Loc, BV, DNV, Rina

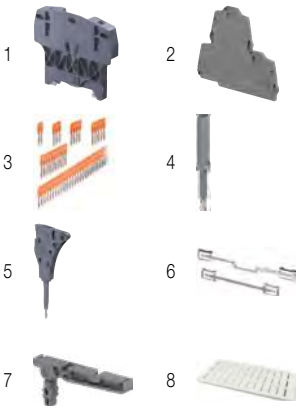

Accessories

	Description			Color	Type	Part Number		Pkg qty	Weight (1 pce) g
1	**End stops**	10 mm	0.394 in	Dark grey	BAZH1	1SNK900102R0000		20	24.00
2	**End sections**	2.55 mm	0.100 in	Dark grey	ES4-D2	1SNK505960R0000		20	4.10
3	**Jumper bars**	2 poles	32 A (IEC)	Orange	JB5-2	1SNK905302R0000		50	1.30
		3 poles	32 A (IEC)		JB5-3	1SNK905303R0000		50	2.00
		4 poles	32 A (IEC)		JB5-4	1SNK905304R0000		50	2.70
		5 poles	32 A (IEC)		JB5-5	1SNK905305R0000		50	3.50
		10 poles	32 A (IEC)		JB5-10	1SNK905310R0000		30	7.10
4	**Test adapters**	For test plugs DIA 2 mm 0.079 in		Dark grey	TP2	1SNK900203R0000		20	1.70
		For test plugs DIA 4 mm 0.157 in			TP4	1SNK900205R0000		20	2.40
5	**Test connectors**	5.2 mm 0.205 in spacing		Dark grey	TC5	1SNK900200R0000		10	5.20
		End module, 5.2 mm 0.205 in			TC5-R1	1SNK900201R0000		10	5.20
6	**Shield connectors**				SHB	1SNK900602R0000		20	4.90
7	**Label holders**			Dark grey	LH-J	1SNK900606R0000		100	0.73
8	**Terminal block markers**	Blank marker		White	MG-CPM 13 41790	1SNB041790R0512		1960	0.23
		Blank card			MC512	1SNK140000R0000		22	9.00
					MC512PA	1SNK149999R0000		20	10.00
		Universal wire markers holder		Grey	UMH	1SNK900611R0000		10	0.20

Complete list of accessories is indicated in the terminal block datasheet including end stops.
Some accessories such as jumper bars may modify the terminal block's ratings: Complete information available in the accessories section of the catalog.

1SNK161003S0201

Technical data valid for copper conductors only.

ZS4-D1 screw clamp terminal blocks

Double deck with 1 feed-through circuit - 5.2 mm 0.205 in spacing

4 mm²
12 AWG

Description

- Ease one potential distribution on 4 independent screw clamps,
- Save space by connecting conductors up to 4 mm² (CB certified) 12 AWG in just 5.2 mm 0.205 in spacing.

ZS4-D1

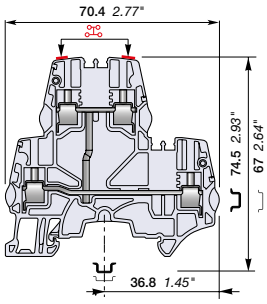

5.2 mm 0.205 in spacing

Ordering details

Description		Color	Type	Part Number		Pkg qty	Weight (1 pce) g
Feed-through	1 feed-through circuit	Grey	ZS4-D1	1SNK505211R0000		50	15.30

Main technical data

Connecting capacity		IEC	UL - CSA
1 conductor per clamp	Rigid: Solid/Stranded	0.2 ... 4 mm²	24 ... 12 AWG
	Flexible without ferrule	0.22 ... 4 mm²	
	Flexible with non insulated ferrule	0.22 ... 4 mm²	24 ... 12 AWG
	Flexible with insulated ferrule	0.22 ... 2.5 mm²	24 ... 14 AWG
	Gauge	A3-B3	
2 conductors per clamp	Rigid: Solid/Stranded	0.2 ... 1.5 mm²	24 ... 16 AWG
	Flexible without ferrule	0.2 ... 1.5 mm²	
	Flexible with twin ferrule	0.22 ... 1.5 mm²	24 ... 16 AWG
Rated current / Rated cross section		29 A / 4 mm²	20 A / 12 AWG
Rated short-time withstand current (1s)		480 A	
Short Circuit Current Rating (with specific conditions)			100 kA
Rated voltage		800 V	300 V
Impulse withstand voltage		8000 V	
Protection		IP20	NEMA 1
Increased safety Ex e		440 V 29 A IEC/EN 60079-7 - IM2 II 2 GD Ex eb I/II/IIIC – 300 V 20 A UL 60079-7 - Class I, Zone 1, AEx e II, Ex e II U	

The connecting capacity data for one Rigid: Solid/Stranded, or one Flexible conductor (when applicable) is a mandatory information required by IEC, UL and CSA standards (Copper conductors). All other data are provided as supplementary information only. For more details, please consult our CB, UL or CSA certificates and technical datasheet available on http://www.TE.com

CE, CB, RoHS, USR CNR, CSA, EAC Ex, ATEX, IECEx, BR-Ex e II, Haz Loc, BV, DNV, Rina

Mounting instructions

Rail		TH 35-7.5, TH 35-15
Wire stripping length		10 mm 0.393 in
Tool		Flat screwdriver Ø 3.5 mm Ø 0.138 in
Torque		0.6 Nm ± 0.1 5.31 lb.in ± 0.885

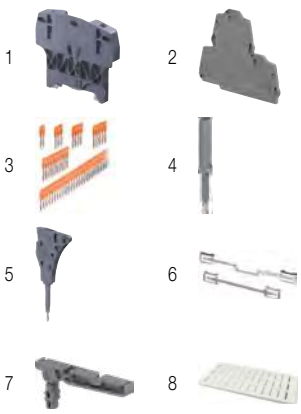

Accessories

	Description			Color	Type	Part Number		Pkg qty	Weight (1 pce) g
1	**End stops**	10 mm	0.394 in	Dark grey	BAZH1	1SNK900102R0000		20	24.00
2	**End sections**	2.55 mm	0.100 in	Dark grey	ES4-D2	1SNK505960R0000		20	4.10
3	**Jumper bars**	2 poles	32 A (IEC)	Orange	JB5-2	1SNK905302R0000		50	1.30
		3 poles	32 A (IEC)		JB5-3	1SNK905303R0000		50	2.00
		4 poles	32 A (IEC)		JB5-4	1SNK905304R0000		50	2.70
		5 poles	32 A (IEC)		JB5-5	1SNK905305R0000		50	3.50
		10 poles	32 A (IEC)		JB5-10	1SNK905310R0000		30	7.10
4	**Test adapters**	For test plugs DIA 2 mm 0.079 in		Dark grey	TP2	1SNK900203R0000		20	1.70
		For test plugs DIA 4 mm 0.157 in			TP4	1SNK900205R0000		20	2.40
5	**Test connectors**	5.2 mm 0.205 in spacing		Dark grey	TC5	1SNK900200R0000		10	5.20
		End module, 5.2 mm 0.205 in			TC5-R1	1SNK900201R0000		10	5.20
6	**Shield connectors**				SHB	1SNK900602R0000		20	4.90
7	**Label holders**			Dark grey	LH-J	1SNK900606R0000		100	0.73
8	**Terminal block markers**	Blank marker		White	MG-CPM 13 41790	1SNB041790R0512		1960	0.23
		Blank card			MC512	1SNK140000R0000		22	9.00
					MC512PA	1SNK149999R0000		20	10.00
		Universal wire markers holder		Grey	UMH	1SNK900611R0000		10	0.20

Complete list of accessories is indicated in the terminal block datasheet including end stops.
Some accessories such as jumper bars may modify the terminal block's ratings: Complete information available in the accessories section of the catalog.

1SNK161007S0201

Technical data valid for copper conductors only.

ZS6-D2 screw clamp terminal blocks

Double deck with 2 feed-through circuits - 6 mm 0.236 in spacing

ZS6-D2

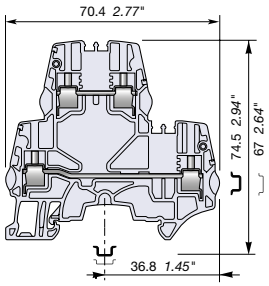

6 mm 0.236 in spacing

6 mm²
10 AWG

Description

- Save space with double deck terminal blocks: 2 independent circuits connected in just 6 mm 0.236 in spacing,
- Customize yourself the ZS6-D2 by soldering electronic components (up to 8.8 mm x 3.2 mm 0.346 x 0.125 in) in the existing linking bars punching,
- Boost the performances: ZS6-D... with ES4-D2 end section is rated 1000 V DC IEC, perfectly adapted to solar applications.

Ordering details

Description		Color	Type	Part Number		Pkg qty	Weight (1 pce) g
Feed-through	2 feed-through circuits	Grey	ZS6-D2	1SNK506210R0000		50	18.40
		Blue	ZS6-D2-BL	1SNK506220R0000		50	18.40
		Orange	ZS6-D2-OR	1SNK506230R0000		50	18.40
		Yellow	ZS6-D2-YL	1SNK506260R0000		50	18.40
		Red	ZS6-D2-RD	1SNK506262R0000		50	18.40
		White	ZS6-D2-WH	1SNK506265R0000		50	18.40
		Black	ZS6-D2-BK	1SNK506266R0000		50	18.40

Main technical data

Connecting capacity		IEC	UL - CSA
1 conductor per clamp	Rigid: Solid/Stranded	0.2 ... 6 mm²	24 ... 10 AWG
	Flexible without ferrule	0.2 ... 6 mm²	
	Flexible with non insulated ferrule	0.22 ... 4 mm²	24 ... 12 AWG
	Flexible with insulated ferrule	0.22 ... 4 mm²	24 ... 12 AWG
	Gauge	A4-B3	
2 conductors per clamp	Rigid: Solid/Stranded	0.2 ... 2.5 mm²	24 ... 14 AWG
	Flexible without ferrule	0.2 ... 2.5 mm²	
	Flexible with twin ferrule	0.22 ... 2.5 mm²	24 ... 14 AWG
Rated current / Rated cross section		40 A / 6 mm²	30 A / 10 AWG
Rated short-time withstand current (1s)		720 A	
Short Circuit Current Rating (with specific conditions)			100 kA
Rated voltage		800 V	300 V
Impulse withstand voltage		8000 V	
Protection		IP20	NEMA 1
Increased safety Ex e		440 V 40 A IEC/EN 60079-7 - IM2 II 2 GD Ex eb I/II/IIIC – 300 V 30 A UL 60079-7 - Class I, Zone 1, AEx e II, Ex e II U	

The connecting capacity data for one Rigid: Solid/Stranded, or one Flexible conductor (when applicable) is a mandatory information required by IEC, UL and CSA standards (Copper conductors). All other data are provided as supplementary information only. For more details, please consult our CB, UL or CSA certificates and technical datasheet available on http://www.TE.com

Mounting instructions

Rail	TH 35-7.5, TH 35-15
Wire stripping length	10 mm 0.393 in
Tool	Flat screwdriver Ø 4 mm Ø 0.157 in
Torque	0.85 Nm ± 0.15 7.52 lb.in ± 1.33

CE | CB | RoHS | USR CNR | CSA | EAC Ex | ATEX | IECEx | BR-Ex e II | Haz Loc | BV | DNV | Rina

Accessories

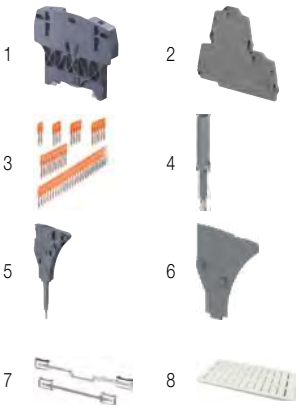

	Description			Color	Type	Part Number		Pkg qty	Weight (1 pce) g
1	**End stops**	10 mm	0.394 in	Dark grey	BAZH1	1SNK900102R0000		20	24.00
2	**End sections**	2.55 mm	0.100 in	Dark grey	ES4-D2	1SNK505960R0000		20	4.10
3	**Jumper bars**	2 poles	41 A (IEC)	Orange	JB6-2	1SNK906302R0000		50	1.30
		3 poles	41 A (IEC)		JB6-3	1SNK906303R0000		50	2.10
		4 poles	41 A (IEC)		JB6-4	1SNK906304R0000		50	2.90
		5 poles	41 A (IEC)		JB6-5	1SNK906305R0000		50	3.60
		10 poles	41 A (IEC)		JB6-10	1SNK906310R0000		20	7.40
4	**Test adapters**	For test plugs DIA 2 mm 0.079 in		Dark grey	TP2	1SNK900203R0000		20	1.70
		For test plugs DIA 4 mm 0.157 in			TP4	1SNK900205R0000		20	2.40
5	**Test connectors**	End module, 5.2 mm 0.205 in		Dark grey	TC5-R1	1SNK900201R0000		10	5.20
6	**Spacers**	0.8 mm	0.031 in	Dark grey	ES-TC6	1SNK900105R0000		10	0.80
7	**Shield connectors**				SHB	1SNK900602R0000		20	4.90
8	**Terminal block markers**	Blank marker		White	MG-CPM 13 41791	1SNB041791R0612		1680	0.27
		Blank card			MC612	1SNK150000R0000		22	10.00
					MC612PA	1SNK159999R0000		20	11.00
		Universal wire markers holder		Grey	UMH	1SNK900611R0000		10	0.20

Complete list of accessories is indicated in the terminal block datasheet including end stops.
Some accessories such as jumper bars may modify the terminal block's ratings: Complete information available in the accessories section of the catalog.

Ground screw clamp terminal blocks

Description		Color	Type	Part Number		Pkg qty	Weight (1 pce) g
Ground	Profile aligned with ZS6-D2 and ZS6-D1	Green-yellow	ZS6-D1-PE	1SNK506250R0000		20	18.40

1SNK161014S0201

Technical data valid for copper conductors only.

ZS6-D1 screw clamp terminal blocks

Double deck with 1 feed-through circuit - 6 mm 0.236 in spacing

ZS6-D1

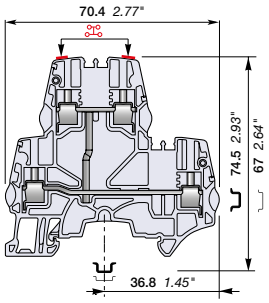

6 mm 0.236 in spacing

		6 mm²
		10 AWG

Description

- Ease one potential distribution on 4 independent screw clamps,
- Save space by connecting conductors up to 6 mm² 10 AWG in just 6 mm 0.236 in spacing,
- Boost the performances: ZS6-D... with ES4-D2 end section is rated 1000 V DC IEC, perfectly adapted to solar applications.

Ordering details

Description		Color	Type	Part Number		Pkg qty	Weight (1 pce) g
Feed-through	1 feed-through circuit	Grey	ZS6-D1	1SNK506211R0000		50	18.40
		Red	ZS6-D1-RD	1SNK506214R0000		50	18.40

Main technical data

Connecting capacity		IEC	UL - CSA
1 conductor per clamp	Rigid: Solid/Stranded	0.2 ... 6 mm²	24 ... 10 AWG
	Flexible without ferrule	0.2 ... 6 mm²	
	Flexible with non insulated ferrule	0.22 ... 4 mm²	24 ... 12 AWG
	Flexible with insulated ferrule	0.22 ... 4 mm²	24 ... 12 AWG
	Gauge	A4-B3	
2 conductors per clamp	Rigid: Solid/Stranded	0.2 ... 2.5 mm²	24 ... 14 AWG
	Flexible without ferrule	0.2 ... 2.5 mm²	
	Flexible with twin ferrule	0.22 ... 2.5 mm²	24 ... 14 AWG
Rated current / Rated cross section		40 A / 6 mm²	30 A / 10 AWG
Rated short-time withstand current (1s)		720 A	
Short Circuit Current Rating (with specific conditions)			100 kA
Rated voltage		800 V	300 V
Impulse withstand voltage		8000 V	
Protection		IP20	NEMA 1
Increased safety Ex e		440 V 40 A IEC/EN 60079-7 - IM2 II 2 GD Ex eb I/II/IIIC – 300 V 30 A UL 60079-7 - Class I, Zone 1, AEx e II, Ex e II U	

The connecting capacity data for one Rigid: Solid/Stranded, or one Flexible conductor (when applicable) is a mandatory information required by IEC, UL and CSA standards (Copper conductors). All other data are provided as supplementary information only. For more details, please consult our CB, UL or CSA certificates and technical datasheet available on http://www.TE.com

CE, CB, RoHS, USR CNR, CSA, EAC Ex, ATEX, IECEx, BR-Ex e II, Haz Loc, BV, DNV, Rina

Mounting instructions

Rail		TH 35-7.5, TH 35-15
Wire stripping length		10 mm 0.393 in
Tool		Flat screwdriver Ø 4 mm Ø 0.157 in
Torque		0.85 Nm ± 0.15 7.52 lb.in ± 1.33

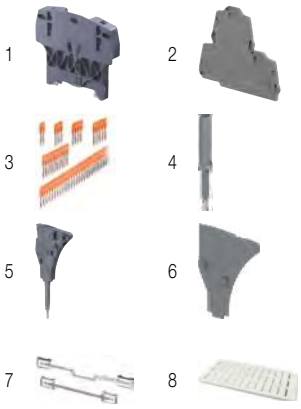

Accessories

	Description			Color	Type	Part Number		Pkg qty	Weight (1 pce) g
1	**End stops**	10 mm	0.394 in	Dark grey	BAZH1	1SNK900102R0000		20	24.00
2	**End sections**	2.55 mm	0.100 in	Dark grey	ES4-D2	1SNK505960R0000		20	4.10
3	**Jumper bars**	2 poles	41 A (IEC)	Orange	JB6-2	1SNK906302R0000		50	1.30
		3 poles	41 A (IEC)		JB6-3	1SNK906303R0000		50	2.10
		4 poles	41 A (IEC)		JB6-4	1SNK906304R0000		50	2.90
		5 poles	41 A (IEC)		JB6-5	1SNK906305R0000		50	3.60
		10 poles	41 A (IEC)		JB6-10	1SNK906310R0000		20	7.40
4	**Test adapters**	For test plugs DIA 2 mm 0.079 in		Dark grey	TP2	1SNK900203R0000		20	1.70
		For test plugs DIA 4 mm 0.157 in			TP4	1SNK900205R0000		20	2.40
5	**Test connectors**	End module, 5.2 mm 0.205 in		Dark grey	TC5-R1	1SNK900201R0000		10	5.20
6	**Spacers**	0.8 mm	0.031 in	Dark grey	ES-TC6	1SNK900105R0000		10	0.80
7	**Shield connectors**				SHB	1SNK900602R0000		20	4.90
8	**Terminal block markers**	Blank marker		White	MG-CPM 13 41791	1SNB041791R0612		1680	0.27
		Blank card			MC612	1SNK150000R0000		22	10.00
					MC612PA	1SNK159999R0000		20	11.00
		Universal wire markers holder		Grey	UMH	1SNK900611R0000		10	0.20

Complete list of accessories is indicated in the terminal block datasheet including end stops.
Some accessories such as jumper bars may modify the terminal block's ratings: Complete information available in the accessories section of the catalog.

8

1SNK161013S0201

Technical data valid for copper conductors only.

ZS6-D2-PE screw clamp terminal blocks

Double deck with 1 feed-through circuit and 1 ground circuit - 6 mm 0.236 in spacing

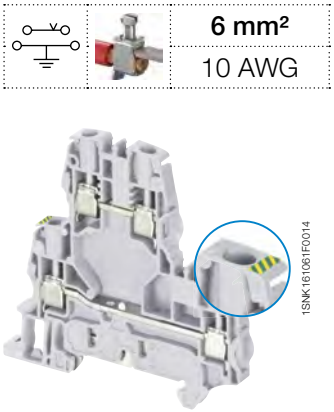

6 mm²
10 AWG

ZS6-D2-PE

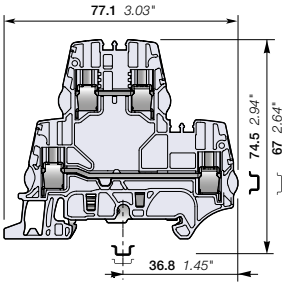

6 mm 0.236 in spacing

Description

- Save space with ZS6-D2-PE terminal blocks: 1 feed-through circuit and 1 ground circuit in just 6 mm 0.236 in spacing,
- Customize yourself the ZS6-D2-PE terminal blocks by soldering electronic components (up to 8.8 mm x 3.2 mm 0.346 x 0.125 in) in the existing linking bars punching.

Ordering details

Description		Color	Type	Part Number		Pkg qty	Weight (1 pce) g
Feed-through + ground	1 feed-through circuit and 1 ground circuit	Grey	ZS6-D2-PE	1SNK506212R0000		50	18.40

Main technical data

Connecting capacity		IEC	UL - CSA
1 conductor per clamp	Rigid: Solid/Stranded	0.2 ... 6 mm²	24 ... 10 AWG
	Flexible without ferrule	0.22 ... 6 mm²	
	Flexible with non insulated ferrule	0.22 ... 4 mm²	24 ... 12 AWG
	Flexible with insulated ferrule	0.22 ... 4 mm²	24 ... 12 AWG
	Gauge	A4-B3	
2 conductors per clamp	Rigid: Solid/Stranded	0.2 ... 2.5 mm²	24 ... 14 AWG
	Flexible without ferrule	0.2 ... 2.5 mm²	
	Flexible with twin ferrule	0.22 ... 2.5 mm²	24 ... 14 AWG
Rated current / Rated cross section		41 A / 6 mm²	30 A / 10 AWG
Rated short-time withstand current (1s)		720 A	
Short Circuit Current Rating (with specific conditions)			
Rated voltage		800 V	300 V
Impulse withstand voltage		8000 V	
Protection		IP20	NEMA 1

Mounting instructions

Rail	TH 35-7.5, TH 35-15
Wire stripping length	10 mm 0.393 in
Tool	Flat screwdriver Ø 4 mm Ø 0.157 in
Torque	0.85 Nm ± 0.15 7.52 lb.in ± 1.33

The connecting capacity data for one Rigid: Solid/Stranded, or one Flexible conductor (when applicable) is a mandatory information required by IEC, UL and CSA standards (Copper conductors). All other data are provided as supplementary information only. For more details, please consult our CB, UL or CSA certificates and technical datasheet available on http://www.TE.com

CE CB RoHS USR CSA EAC BV DNV

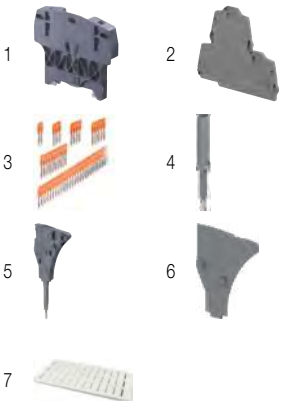

Accessories

	Description			Color	Type	Part Number		Pkg qty	Weight (1 pce) g
1	**End stops**	10 mm	0.394 in	Dark grey	BAZH1	1SNK900102R0000		20	24.00
2	**End sections**	2.55 mm	0.100 in	Dark grey	ES4-D2	1SNK505960R0000		20	4.10
3	**Jumper bars**	2 poles	41 A (IEC)	Orange	JB6-2	1SNK906302R0000		50	1.30
		3 poles	41 A (IEC)		JB6-3	1SNK906303R0000		50	2.10
		4 poles	41 A (IEC)		JB6-4	1SNK906304R0000		50	2.90
		5 poles	41 A (IEC)		JB6-5	1SNK906305R0000		50	3.60
		10 poles	41 A (IEC)		JB6-10	1SNK906310R0000		20	7.40
4	**Test adapters**	For test plugs DIA 4 mm 0.157 in		Dark grey	TP4	1SNK900205R0000		20	2.40
5	**Test connectors**	End module, 5.2 mm 0.205 in		Dark grey	TC5-R1	1SNK900201R0000		10	5.20
6	**Spacers**	0.8 mm	0.031 in	Dark grey	ES-TC6	1SNK900105R0000		10	0.80
7	**Terminal block markers**	Blank marker		White	MG-CPM 13 41791	1SNB041791R0612		1680	0.27
		Blank card			MC612	1SNK150000R0000		22	10.00
					MC612PA	1SNK159999R0000		20	11.00
		Universal wire markers holder		Grey	UMH	1SNK900611R0000		10	0.20

Complete list of accessories is indicated in the terminal block datasheet including end stops.
Some accessories such as jumper bars may modify the terminal block's ratings: Complete information available in the accessories section of the catalog.

Feed-through screw clamp terminal blocks

Description		Color	Type	Part Number		Pkg qty	Weight (1 pce) g
Feed-through	2 feed-through circuits	Grey	ZS6-D2	1SNK506210R0000		50	18.40

1SNK161048S0201

Technical data valid for copper conductors only.

ZS6-D1-PE screw clamp terminal blocks

Double deck with 1 ground circuit - 6 mm 0.236 in spacing

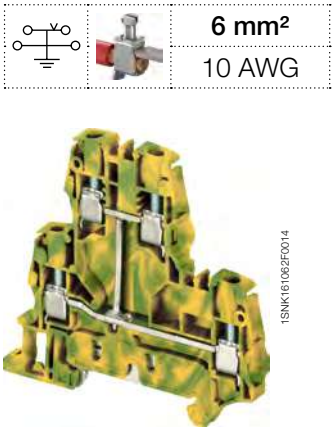

6 mm²
10 AWG

1SNK161062F0014

ZS6-D1-PE

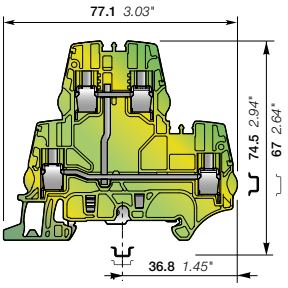

6 mm 0.236 in spacing

Description

- Save space with double deck ground terminal blocks aligned with ZS6-D2 double deck terminal blocks for convenient cabling process and circuit configuration,
- Benefit from our screwless rail connection: non operator independant, secured snap on or remove from the rail, performances above the requirements of IEC 60947-7-2 standard.

Ordering details

Description		Color	Type	Part Number		Pkg qty	Weight (1 pce) g
Ground	1 ground circuit	Green-yellow	ZS6-D1-PE	1SNK506250R0000		20	18.40

Main technical data

Connecting capacity		IEC	UL - CSA
1 conductor per clamp	Rigid: Solid/Stranded	0.2 ... 6 mm²	24 ... 10 AWG
	Flexible without ferrule	0.22 ... 6 mm²	
	Flexible with non insulated ferrule	0.22 ... 4 mm²	24 ... 12 AWG
	Flexible with insulated ferrule	0.22 ... 4 mm²	24 ... 12 AWG
	Gauge	A4-B3	
Rated cross section		6 mm²	10 AWG
Rated short-time withstand current (1s)		720 A	
Protection		IP20	NEMA 1

Mounting instructions

Rail	TH 35-7.5, TH 35-15
Wire stripping length	10 mm 0.393 in
Tool	Flat screwdriver Ø 4 mm Ø 0.157 in
Torque	0.85 Nm ± 0.15 7.52 lb.in ± 1.33

The connecting capacity data for one Rigid: Solid/Stranded, or one Flexible conductor (when applicable) is a mandatory information required by IEC, UL and CSA standards (Copper conductors). All other data are provided as supplementary information only. For more details, please consult our CB, UL or CSA certificates and technical datasheet available on http://www.TE.com

CE CB RoHS USR CSA EAC BV DNV

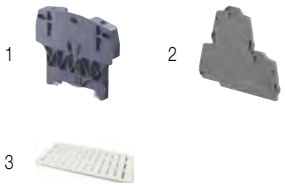

Accessories

	Description			Color	Type	Part Number		Pkg qty	Weight (1 pce) g
1	**End stops**	10 mm	0.394 in	Dark grey	BAZH1	1SNK900102R0000		20	24.00
2	**End sections**	2.55 mm	0.100 in	Dark grey	ES4-D2	1SNK505960R0000		20	4.10
3	**Terminal block markers**	Blank marker		White	MG-CPM 13 41791	1SNB041791R0612		1680	0.27
		Blank card			MC612	1SNK150000R0000		22	10.00
					MC612PA	1SNK159999R0000		20	11.00
		Universal wire markers holder		Grey	UMH	1SNK900611R0000		10	0.20

Complete list of accessories is indicated in the terminal block datasheet including end stops.
Some accessories such as jumper bars may modify the terminal block's ratings: Complete information available in the accessories section of the catalog.

8

1SNK161049S0201

Technical data valid for copper conductors only.

ZS4-D2-S screw clamp terminal blocks

Double deck with 1 disconnect circuit and 1 feed-through circuit - 5.2 mm 0.205 in spacing

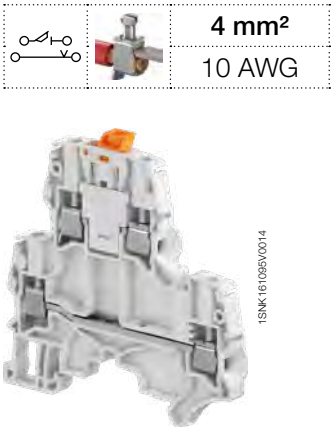

ZS4-D2-S

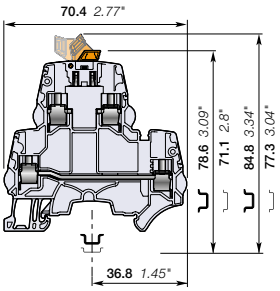

5.2 mm 0.205 in spacing

	4 mm²
	10 AWG

Description

- Save space: connect one complete circuit on a single block featuring disconnect and feed-through for the return circuit in just 5.2 mm 0.205 in spacing,
- Same profile as ZS4-D... double deck terminal blocks: convenient cabling process, aligned jumpers, markers and common end section.

Ordering details

Description		Color	Type	Part Number		Pkg qty	Weight (1 pce) g
Feed-through + disconnect	1 disconnect circuit and 1 feed-through circuit	Grey	ZS4-D2-S	1SNK505315R0000		50	15.90

Main technical data

Connecting capacity		IEC	UL - CSA
1 conductor per clamp	Rigid: Solid/Stranded	0.2 ... 4 mm²	24 ... 10 AWG
	Flexible without ferrule	0.22 ... 4 mm²	
	Flexible with non insulated ferrule	0.22 ... 4 mm²	24 ... 12 AWG
	Flexible with insulated ferrule	0.22 ... 2.5 mm²	24 ... 14 AWG
	Gauge	A3-B3	
2 conductors per clamp	Rigid: Solid/Stranded	0.2 ... 1.5 mm²	24 ... 16 AWG
	Flexible without ferrule	0.2 ... 1.5 mm²	
	Flexible with twin ferrule	0.22 ... 1.5 mm²	24 ... 16 AWG
Disconnect circuit			
Rated current / Rated cross section		25 A / 4 mm²	27 A / 10 AWG
Feed-through circuit			
Rated current / Rated cross section		29 A / 4 mm²	27 A / 10 AWG
Rated short-time withstand current (1s)		480 A	
Rated voltage		630 V	300 V
Impulse withstand voltage		8000 V	
Protection		IP20	NEMA 1

Mounting instructions

Rail		TH 35-7.5, TH 35-15
Wire stripping length		10.5 mm 0.413 in
Tool		Flat screwdriver Ø 3.5 mm Ø 0.138 in
Torque		0.6 Nm ± 0.1 5.31 lb.in ± 0.885

Recommendation for best usage: in horizontal assemblies, disconnect terminal blocks should be mounted with fixed foot on top (power side) so that the disconnect knife does not partially close through gravity. Furthermore, as specified per IEC 60947-7-1, disconnect terminal blocks are intended to be used for temporary disconnection at zero potential and at no load.

The connecting capacity data for one Rigid: Solid/Stranded, or one Flexible conductor (when applicable) is a mandatory information required by IEC, UL and CSA standards (Copper conductors). All other data are provided as supplementary information only. For more details, please consult our CB, UL or CSA certificates and technical datasheet available on http://www.TE.com

CE CB RoHS USR CSA EAC BV DNV

Accessories

	Description			Color	Type	Part Number		Pkg qty	Weight (1 pce) g
1	**End stops**	10 mm	0.394 in	Dark grey	BAZH1	1SNK900102R0000		20	24.00
2	**End sections**	2.55 mm	0.100 in	Dark grey	ES4-D2	1SNK505960R0000		20	4.10
3	**Jumper bars**	2 poles	32 A (IEC)	Orange	JB5-2	1SNK905302R0000		50	1.30
		3 poles	32 A (IEC)		JB5-3	1SNK905303R0000		50	2.00
		4 poles	32 A (IEC)		JB5-4	1SNK905304R0000		50	2.70
		5 poles	32 A (IEC)		JB5-5	1SNK905305R0000		50	3.50
		10 poles	32 A (IEC)		JB5-10	1SNK905310R0000		30	7.10
		50 poles	32 A (IEC)		JB5-50	1SNK905350R0000		10	36.00
4	**Test adapters**	For test plugs DIA 2 mm 0.079 in		Dark grey	TP2	1SNK900203R0000		20	1.70
		For test plugs DIA 4 mm 0.157 in			TP4	1SNK900205R0000		20	2.40
5	**Shield connectors**				SHB	1SNK900602R0000		20	4.90
6	**Terminal block markers**	Blank marker		White	MG-CPM 13 41790	1SNB041790R0512		1960	0.23
		Blank card			MC512	1SNK140000R0000		22	9.00
					MC512PA	1SNK149999R0000		20	10.00
		Universal wire markers holder		Grey	UMH	1SNK900611R0000		10	0.20

Complete list of accessories is indicated in the terminal block datasheet including end stops.
Some accessories such as jumper bars may modify the terminal block's ratings: Complete information available in the accessories section of the catalog.

1SNK161074S0201

Technical data valid for copper conductors only.

ZS4-D2-S-T screw clamp terminal blocks

Double deck with 1 disconnect circuit with test socket screws and 1 feed-through circuit - 5.2 mm 0.205 in spacing

4 mm²
10 AWG

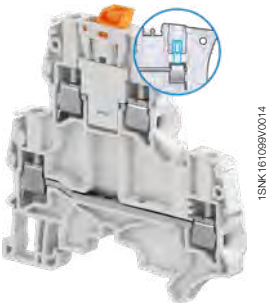

ZS4-D2-S-T

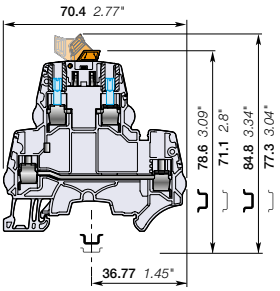

5.2 mm 0.205 in spacing

Description

Find the same functionalities as ZS4-D2-S, upgraded with the two built-in test socket screws meant to ease your signal testing during commissioning and maintenance.

Ordering details

Description		Color	Type	Part Number		Pkg qty	Weight (1 pce) g
Feed-through + disconnect	1 disconnect circuit with 2 test socket screws and 1 feed-through circuit	Grey	ZS4-D2-S-T2	1SNK505316R0000		50	16.20

Main technical data

Connecting capacity		IEC	UL - CSA
1 conductor per clamp	Rigid: Solid/Stranded	0.2 ... 4 mm²	24 ... 10 AWG
	Flexible without ferrule	0.22 ... 4 mm²	
	Flexible with non insulated ferrule	0.22 ... 4 mm²	24 ... 12 AWG
	Flexible with insulated ferrule	0.22 ... 2.5 mm²	24 ... 14 AWG
	Gauge	A3-B3	
2 conductors per clamp	Rigid: Solid/Stranded	0.2 ... 1.5 mm²	24 ... 16 AWG
	Flexible without ferrule	0.2 ... 1.5 mm²	
	Flexible with twin ferrule	0.22 ... 1.5 mm²	24 ... 16 AWG
Disconnect circuit			
Rated current / Rated cross section		25 A / 4 mm²	27 A / 10 AWG
Feed-through circuit			
Rated current / Rated cross section		29 A / 4 mm²	27 A / 10 AWG
Rated short-time withstand current (1s)		480 A	
Rated voltage		630 V	300 V
Impulse withstand voltage		8000 V	
Protection		IP20	NEMA 1

Mounting instructions

Rail		TH 35-7.5, TH 35-15
Wire stripping length		10.5 mm 0.413 in
Tool		Flat screwdriver Ø 3.5 mm Ø 0.138 in
Torque		0.6 Nm ± 0.1 5.31 lb.in ± 0.885

Recommendation for best usage: in horizontal assemblies, disconnect terminal blocks should be mounted with fixed foot on top (power side) so that the disconnect knife does not partially close through gravity. Furthermore, as specified per IEC 60947-7-1, disconnect terminal blocks are intended to be used for temporary disconnection at zero potential and at no load.

The connecting capacity data for one Rigid: Solid/Stranded, or one Flexible conductor (when applicable) is a mandatory information required by IEC, UL and CSA standards (Copper conductors). All other data are provided as supplementary information only. For more details, please consult our CB, UL or CSA certificates and technical datasheet available on http://www.TE.com

CE | CB | RoHS | USR | CSA | EAC | BV | DNV

Accessories

	Description			Color	Type	Part Number		Pkg qty	Weight (1 pce) g
1	**End stops**	10 mm	0.394 in	Dark grey	BAZH1	1SNK900102R0000		20	24.00
2	**End sections**	2.55 mm	0.100 in	Dark grey	ES4-D2	1SNK505960R0000		20	4.10
3	**Jumper bars**	2 poles	32 A (IEC)	Orange	JB5-2	1SNK905302R0000		50	1.30
		3 poles	32 A (IEC)		JB5-3	1SNK905303R0000		50	2.00
		4 poles	32 A (IEC)		JB5-4	1SNK905304R0000		50	2.70
		5 poles	32 A (IEC)		JB5-5	1SNK905305R0000		50	3.50
		10 poles	32 A (IEC)		JB5-10	1SNK905310R0000		30	7.10
		50 poles	32 A (IEC)		JB5-50	1SNK905350R0000		10	36.00
4	**Test adapters**	For test plugs DIA 2 mm 0.079 in		Dark grey	TP2	1SNK900203R0000		20	1.70
		For test plugs DIA 4 mm 0.157 in			TP4	1SNK900205R0000		20	2.40
5	**Shield connectors**				SHB	1SNK900602R0000		20	4.90
6	**Terminal block markers**	Blank marker		White	MG-CPM 13 41790	1SNB041790R0512		1960	0.23
		Blank card			MC512	1SNK140000R0000		22	9.00
					MC512PA	1SNK149999R0000		20	10.00
		Universal wire markers holder		Grey	UMH	1SNK900611R0000		10	0.20

Complete list of accessories is indicated in the terminal block datasheet including end stops.
Some accessories such as jumper bars may modify the terminal block's ratings: Complete information available in the accessories section of the catalog.

8

1SNK161075S0201

Technical data valid for copper conductors only.

ZS4-D2-SF1 screw clamp terminal blocks

Double deck with 1 fuse circuit and 1 feed-through circuit - 8 mm 0.315 in spacing

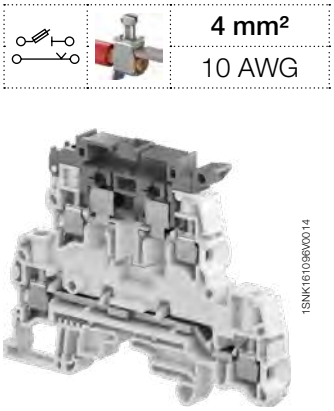

4 mm²	
10 AWG	

ZS4-D2-SF1

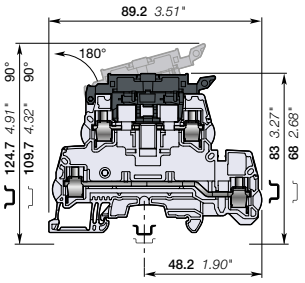

8 mm 0.315 in spacing

Description

- Save space: connect one complete circuit on a single block featuring fuse and feed-through for the return circuit,
- Protect your circuit with either 5X20 or 5X25 fuse (fuse not supplied with the terminal blocks),
- High performances product: compliant with IEC 60947-7-3 standard and jumper channel for the feed-through circuit.

Ordering details

Description		Color	Type	Part Number		Pkg qty	Weight (1 pce) g
Feed-through + fuse	1 fuse circuit and 1 feed-through circuit	Grey, dark grey	ZS4-D2-SF1	1SNK508425R0000		50	27.50

Main technical data

Connecting capacity		IEC	UL - CSA
1 conductor per clamp	Rigid: Solid/Stranded	0.2 ... 6 mm²	24 ... 10 AWG
	Flexible without ferrule	0.22 ... 4 mm²	
	Flexible with non insulated ferrule	0.22 ... 4 mm²	24 ... 12 AWG
	Flexible with insulated ferrule	0.22 ... 4 mm²	24 ... 12 AWG
	Gauge	A3-B3	
2 conductors per clamp	Rigid: Solid/Stranded	0.2 ... 2.5 mm²	24 ... 14 AWG
	Flexible without ferrule	0.2 ... 2.5 mm²	
	Flexible with twin ferrule	0.22 ... 2.5 mm²	24 ... 14 AWG
Disconnect circuit Rated current / Rated cross section		6.3 A / 4 mm²	12 A / 10 AWG
Feed-through circuit Rated current / Rated cross section		32 A / 4 mm²	30 A / 10 AWG
Rated voltage		800 V	300 V
Impulse withstand voltage		8000 V	
Protection		IP20	NEMA 1

Mounting instructions

Rail	TH 35-7.5, TH 35-15
Wire stripping length	11 mm 0.433 in
Tool	Flat screwdriver Ø 3.5 mm Ø 0.138 in
Torque	0.6 Nm ± 0.1 5.31 lb.in ± 0.885

Separate arrangement		Assembly composed of 1 fuse terminal block in between non fuse terminal blocks	Overload and short-circuit protection	2.5 W
			Exclusive short-circuit protection	4 W
Compound arrangement		Assembly composed of 5 fuse terminal blocks	Overload and short-circuit protection	1.6 W
			Exclusive short-circuit protection	4 W

The connecting capacity data for one Rigid: Solid/Stranded, or one Flexible conductor (when applicable) is a mandatory information required by IEC, UL and CSA standards (Copper conductors). All other data are provided as supplementary information only. For more details, please consult our CB, UL or CSA certificates and technical datasheet available on http://www.TE.com

CE CB RoHS USR CSA EAC BV DNV

Accessories

	Description			Color	Type	Part Number		Pkg qty	Weight (1 pce) g
1	**End stops**	10 mm	0.394 in	Dark grey	BAZH1	1SNK900102R0000		20	24.00
2	**End sections**	2.5 mm	0.098 in	Dark grey	ES4-D2-SF1	1SNK508911R0000		20	5.00
3	**Jumper bars**	2 poles	57 A (IEC)	Orange	JB8-2	1SNK908302R0000		50	2.70
		3 poles	57 A (IEC)		JB8-3	1SNK908303R0000		50	4.10
		4 poles	57 A (IEC)		JB8-4	1SNK908304R0000		50	5.60
		5 poles	57 A (IEC)		JB8-5	1SNK908305R0000		40	7.00
		10 poles	57 A (IEC)		JB8-10	1SNK908310R0000		20	14.20
4	**Lateral jumper bars**	10 poles	35 A (IEC)	Grey	PC81-10	1SNA173523R1100		10	5.00
5	**Test adapters**	For test plugs DIA 2 mm 0.079 in		Dark grey	TP2	1SNK900203R0000		20	1.70
		For test plugs DIA 4 mm 0.157 in			TP4	1SNK900205R0000		20	2.40
6	**Test connectors**	5.2 mm 0.205 in spacing		Dark grey	TC5	1SNK900200R0000		10	5.20
		End module, 5.2 mm 0.205 in			TC5-R1	1SNK900201R0000		10	5.20
7	**Spacers**	2.8 mm	0.110 in	Dark grey	ES-TC8	1SNK900104R0000		10	1.40
8	**Assembly rods**	2 poles			TGA8	1SNA168672R1100		10	1.00
		3 poles			TGA8	1SNA168673R1200		10	1.50
		4 poles			TGA8	1SNA168674R1300		10	2.00
9	**Terminal block markers**	Blank marker		White	MG-CPM 13 41791	1SNB041791R0612		1680	0.27
		Blank card			MC812	1SNK160000R0000		22	10.00
					MC812PA	1SNK169999R0000		20	14.00
		Universal wire markers holder		Grey	UMH	1SNK900611R0000		10	0.20

Complete list of accessories is indicated in the terminal block datasheet including end stops.
Some accessories such as jumper bars may modify the terminal block's ratings: Complete information available in the accessories section of the catalog.

1SNK161076S0201

Technical data valid for copper conductors only.

ZS4-D2-SF1-R screw clamp terminal blocks

Double deck with 1 fuse circuit with blown fuse indicator and 1 feed-through circuit - 8 mm 0.315 in spacing

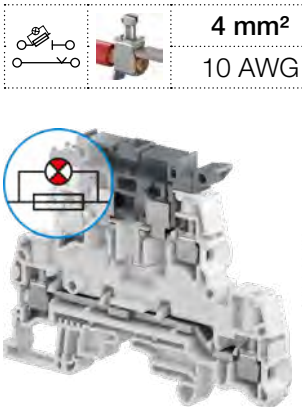

4 mm²	
10 AWG	

1SNK161097V0014

ZS4-D2-SF1-R

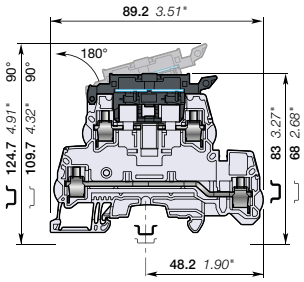

8 mm 0.315 in spacing

Description

- Find the same functionalities as ZS4-D2-SF1, upgraded with our integrated blown fuse indicator (with leakage current < 0.5 mA),
- Only one part number needed to fit AC / DC 24 V up to 110 V.

Ordering details

Description		Color	Type	Part Number		Pkg qty	Weight (1 pce) g
Feed-through + fuse	1 fuse circuit with blown fuse indicator 115 ... 250 V AC / DC and 1 feed-through circuit	Grey, dark grey	ZS4-D2-SF1-R3	1SNK508424R0000		50	29.40
	1 fuse circuit with blown fuse indicator 24 ... 110 V AC / DC and 1 feed-through circuit		ZS4-D2-SF1-R1	1SNK508423R0000		50	29.40

Main technical data

Connecting capacity		IEC	UL - CSA
1 conductor per clamp	Rigid: Solid/Stranded	0.2 ... 6 mm²	24 ... 10 AWG
	Flexible without ferrule	0.22 ... 4 mm²	
	Flexible with non insulated ferrule	0.22 ... 4 mm²	24 ... 12 AWG
	Flexible with insulated ferrule	0.22 ... 4 mm²	24 ... 12 AWG
	Gauge	A3-B3	
2 conductors per clamp	Rigid: Solid/Stranded	0.2 ... 2.5 mm²	24 ... 14 AWG
	Flexible without ferrule	0.2 ... 2.5 mm²	
	Flexible with twin ferrule	0.22 ... 2.5 mm²	24 ... 14 AWG
Disconnect circuit Rated current / Rated cross section		6.3 A / 4 mm²	12 A / 10 AWG
Feed-through circuit Rated current / Rated cross section		32 A / 4 mm²	30 A / 10 AWG
Rated voltage		800 V	300 V
Impulse withstand voltage		8000 V	
Protection		IP20	NEMA 1

Mounting instructions

Rail	TH 35-7.5, TH 35-15
Wire stripping length	11 mm 0.433 in
Tool	Flat screwdriver Ø 3.5 mm Ø 0.138 in
Torque	0.6 Nm ± 0.1 5.31 lb.in ± 0.885

Separate arrangement		Assembly composed of 1 fuse terminal block in between non fuse terminal blocks	Overload and short-circuit protection	2.5 W
			Exclusive short-circuit protection	4 W
Compound arrangement		Assembly composed of 5 fuse terminal blocks	Overload and short-circuit protection	1.6 W
			Exclusive short-circuit protection	4 W

The connecting capacity data for one Rigid: Solid/Stranded, or one Flexible conductor (when applicable) is a mandatory information required by IEC, UL and CSA standards (Copper conductors).
All other data are provided as supplementary information only. For more details, please consult our CB, UL or CSA certificates and technical datasheet available on http://www.TE.com

CE CB RoHS USR CSA EAC BV DNV

Accessories

	Description			Color	Type	Part Number		Pkg qty	Weight (1 pce) g
1	**End stops**	10 mm	0.394 in	Dark grey	BAZH1	1SNK900102R0000		20	24.00
2	**End sections**	2.5 mm	0.098 in	Dark grey	ES4-D2-SF1	1SNK508911R0000		20	5.00
3	**Jumper bars**	2 poles	57 A (IEC)	Orange	JB8-2	1SNK908302R0000		50	2.70
		3 poles	57 A (IEC)		JB8-3	1SNK908303R0000		50	4.10
		4 poles	57 A (IEC)		JB8-4	1SNK908304R0000		50	5.60
		5 poles	57 A (IEC)		JB8-5	1SNK908305R0000		40	7.00
		10 poles	57 A (IEC)		JB8-10	1SNK908310R0000		20	14.20
4	**Lateral jumper bars**	10 poles	35 A (IEC)	Grey	PC81-10	1SNA173523R1100		10	5.00
5	**Test adapters**	For test plugs DIA 2 mm 0.079 in		Dark grey	TP2	1SNK900203R0000		20	1.70
		For test plugs DIA 4 mm 0.157 in			TP4	1SNK900205R0000		20	2.40
6	**Test connectors**	5.2 mm 0.205 in spacing		Dark grey	TC5	1SNK900200R0000		10	5.20
		End module, 5.2 mm 0.205 in			TC5-R1	1SNK900201R0000		10	5.20
7	**Spacers**	2.8 mm	0.110 in	Dark grey	ES-TC8	1SNK900104R0000		10	1.40
8	**Assembly rods**	2 poles			TGA8	1SNA168672R1100		10	1.00
		3 poles			TGA8	1SNA168673R1200		10	1.50
		4 poles			TGA8	1SNA168674R1300		10	2.00
9	**Terminal block markers**	Blank marker		White	MG-CPM 13 41791	1SNB041791R0612		1680	0.27
		Blank card			MC812	1SNK160000R0000		22	10.00
					MC812PA	1SNK169999R0000		20	14.00
		Universal wire markers holder		Grey	UMH	1SNK900611R0000		10	0.20

Complete list of accessories is indicated in the terminal block datasheet including end stops.
Some accessories such as jumper bars may modify the terminal block's ratings: Complete information available in the accessories section of the catalog.

8

1SNK161077S0201

Technical data valid for copper conductors only.

ZS4-T3 screw clamp terminal blocks

Triple deck with 3 feed-through circuits - 5.2 mm 0.205 in spacing

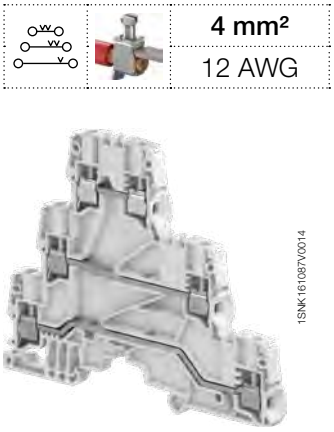

4 mm²
12 AWG

1SNK161087V0014

ZS4-T3

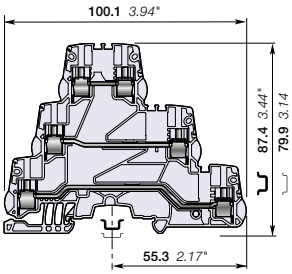

5.2 mm 0.205 in spacing

Description

Save space: 3 independent circuits in just 5.2 mm 0.205 in spacing,

– Fit many applications: space constraints, multiple signals distribution, sensors distribution, thanks to the jumper channels available on each deck.

Ordering details

Description		Color	Type	Part Number		Pkg qty	Weight (1 pce) g
Feed-through	3 feed-through circuits	Grey	ZS4-T3	1SNK505212R0000		25	24.40

Main technical data

Connecting capacity		IEC	UL - CSA
1 conductor per clamp	Rigid: Solid/Stranded	0.2 ... 4 mm²	24 ... 12 AWG
	Flexible without ferrule	0.22 ... 4 mm²	
	Flexible with non insulated ferrule	0.22 ... 4 mm²	24 ... 12 AWG
	Flexible with insulated ferrule	0.22 ... 2.5 mm²	24 ... 14 AWG
	Gauge	A3-B3	
2 conductors per clamp	Rigid: Solid/Stranded	0.2 ... 1.5 mm²	24 ... 16 AWG
	Flexible without ferrule	0.2 ... 1.5 mm²	
	Flexible with twin ferrule	0.22 ... 1.5 mm²	24 ... 16 AWG
Rated current / Rated cross section		32 A / 4 mm²	20 A / 12 AWG
Rated short-time withstand current (1s)		480 A	
Rated voltage		800 V	300 V
Impulse withstand voltage		8000 V	
Protection		IP20	NEMA 1

Mounting instructions

Rail		TH 35-7.5, TH 35-15
Wire stripping length		10.5 mm 0.413 in
Tool		Flat screwdriver Ø 3.5 mm Ø 0.138 in
Torque		0.6 Nm ± 0.1 5.31 lb.in ± 0.885

The connecting capacity data for one Rigid: Solid/Stranded, or one Flexible conductor (when applicable) is a mandatory information required by IEC, UL and CSA standards (Copper conductors). All other data are provided as supplementary information only. For more details, please consult our CB, UL or CSA certificates and technical datasheet available on http://www.TE.com

CE CB RoHS USR CSA EAC BV DNV

Accessories

	Description			Color	Type	Part Number		Pkg qty	Weight (1 pce) g
1	**End stops**	10 mm	0.394 in	Dark grey	BAZH1	1SNK900102R0000		20	24.00
2	**End sections**	0.8 mm	0.031 in	Dark grey	ES4-T3	1SNK505961R0000		20	4.20
3	**Jumper bars**	2 poles	32 A (IEC)	Orange	JB5-2	1SNK905302R0000		50	1.30
		3 poles	32 A (IEC)		JB5-3	1SNK905303R0000		50	2.00
		4 poles	32 A (IEC)		JB5-4	1SNK905304R0000		50	2.70
		5 poles	32 A (IEC)		JB5-5	1SNK905305R0000		50	3.50
		10 poles	32 A (IEC)		JB5-10	1SNK905310R0000		30	7.10
		50 poles	32 A (IEC)		JB5-50	1SNK905350R0000		10	36.00
4	**Test adapters**	For test plugs DIA 2 mm 0.079 in		Dark grey	TP2	1SNK900203R0000		20	1.70
		For test plugs DIA 4 mm 0.157 in			TP4	1SNK900205R0000		20	2.40
5	**Label holders**			Dark grey	LH-J	1SNK900606R0000		100	0.73
6	**Terminal block markers**	Blank marker		White	MG-CPM 13 41790	1SNB041790R0512		1960	0.23
		Blank card			MC512	1SNK140000R0000		22	9.00
					MC512PA	1SNK149999R0000		20	10.00
		Universal wire markers holder		Grey	UMH	1SNK900611R0000		10	0.20

Complete list of accessories is indicated in the terminal block datasheet including end stops.
Some accessories such as jumper bars may modify the terminal block's ratings: Complete information available in the accessories section of the catalog.

1SNK161072S0201

Technical data valid for copper conductors only.

ZS4-T3-R1 screw clamp terminal blocks

Triple deck with 3 feed-through circuits - 6 mm 0.236 in spacing

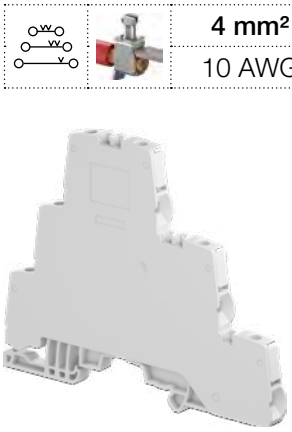

4 mm²
10 AWG

1SNK161088V0014

ZS4-T3-R1

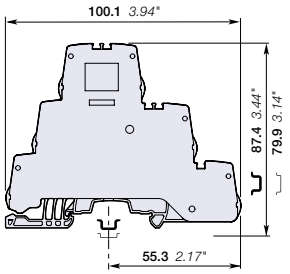

6 mm 0.236 in spacing

Description

Unique triple deck solution combining increased connecting capacity (up to 4 mm² with ferrule) and jumper channel available on each deck,

- Fit many applications: space constraints, multiple signals distribution, sensors distribution,
- Closed terminal block: no end section needed, optimized rigidity.

Ordering details

Description		Color	Type	Part Number		Pkg qty	Weight (1 pce) g
Feed-through	Closed block with 3 feed-through circuits	Grey	ZS4-T3-R1	1SNK506213R0000		50	28.30

Main technical data

Connecting capacity		IEC	UL - CSA
1 conductor per clamp	Rigid: Solid/Stranded	0.2 ... 4 mm²	24 ... 10 AWG
	Flexible without ferrule	0.22 ... 4 mm²	
	Flexible with non insulated ferrule	0.22 ... 4 mm²	24 ... 12 AWG
	Flexible with insulated ferrule	0.22 ... 4 mm²	24 ... 12 AWG
	Gauge	A3-B3	
2 conductors per clamp	Rigid: Solid/Stranded	0.2 ... 1.5 mm²	24 ... 16 AWG
	Flexible without ferrule	0.2 ... 1.5 mm²	
	Flexible with twin ferrule	0.22 ... 1.5 mm²	24 ... 16 AWG
Rated current / Rated cross section		32 A / 4 mm²	30 A / 10 AWG
Rated short-time withstand current (1s)		480 A	
Rated voltage		800 V	300 V
Impulse withstand voltage		8000 V	
Protection		IP20	NEMA 1

Mounting instructions

Rail	TH 35-7.5, TH 35-15
Wire stripping length	10.5 mm 0.413 in
Tool	Flat screwdriver Ø 3.5 mm Ø 0.138 in
Torque	0.6 Nm ± 0.1 5.31 lb.in ± 0.885

The connecting capacity data for one Rigid: Solid/Stranded, or one Flexible conductor (when applicable) is a mandatory information required by IEC, UL and CSA standards (Copper conductors). All other data are provided as supplementary information only. For more details, please consult our CB, UL or CSA certificates and technical datasheet available on http://www.TE.com

CE, CB, RoHS, USR, CSA, EAC, BV, DNV

Accessories

	Description			Color	Type	Part Number		Pkg qty	Weight (1 pce) g
1	**End stops**	10 mm	0.394 in	Dark grey	BAZH1	1SNK900102R0000		20	24.00
2	**Jumper bars**	2 poles	41 A (IEC)	Orange	JB6-2	1SNK906302R0000		50	1.30
		3 poles	41 A (IEC)		JB6-3	1SNK906303R0000		50	2.10
		4 poles	41 A (IEC)		JB6-4	1SNK906304R0000		50	2.90
		5 poles	41 A (IEC)		JB6-5	1SNK906305R0000		50	3.60
		10 poles	41 A (IEC)		JB6-10	1SNK906310R0000		20	7.40
3	**Test adapters**	For test plugs DIA 2 mm 0.079 in		Dark grey	TP2	1SNK900203R0000		20	1.70
		For test plugs DIA 4 mm 0.157 in			TP4	1SNK900205R0000		20	2.40
4	**Label holders**			Dark grey	LH-J	1SNK900606R0000		100	0.73
5	**Terminal block markers**	Blank marker		White	MG-CPM 13 41791	1SNB041791R0612		1680	0.27
		Blank card			MC512	1SNK140000R0000		22	9.00
					MC512PA	1SNK149999R0000		20	10.00
		Universal wire markers holder		Grey	UMH	1SNK900611R0000		10	0.20

Complete list of accessories is indicated in the terminal block datasheet including end stops.
Some accessories such as jumper bars may modify the terminal block's ratings: Complete information available in the accessories section of the catalog.

8

1SNK161073S0201

Technical data valid for copper conductors only.

ZS4-D-CH-UD screw clamp terminal blocks

Component holder - 5.2 mm 0.205 in spacing

4 mm²
12 AWG

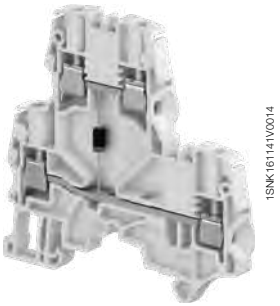

ZS4-D-CH

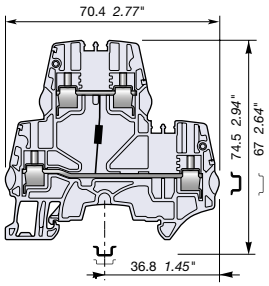

5.2 mm 0.205 in spacing

Description

Protect your circuit with one 1N4007 diode.

Ordering details

Description		Color	Type	Part Number		Pkg qty	Weight (1 pce) g
Component holder	Cathode of the blocking diode connected to the lower circuit	Grey	ZS4-D-CH-UD	1SNK505214R0000		50	15.30

Main technical data

Connecting capacity		IEC	UL - CSA
1 conductor per clamp	Rigid: Solid/Stranded	0.2 ... 4 mm²	24 ... 12 AWG
	Flexible without ferrule	0.22 ... 4 mm²	
	Flexible with non insulated ferrule	0.22 ... 4 mm²	24 ... 12 AWG
	Flexible with insulated ferrule	0.22 ... 2.5 mm²	24 ... 14 AWG
	Gauge	A3-B3	
2 conductors per clamp	Rigid: Solid/Stranded	0.2 ... 1.5 mm²	24 ... 16 AWG
	Flexible without ferrule	0.2 ... 1.5 mm²	
	Flexible with twin ferrule	0.22 ... 1.5 mm²	24 ... 16 AWG
Rated current / Rated cross section		29 A / 4 mm²	20 A / 12 AWG
Rated short-time withstand current (1s)		480 A	
Short Circuit Current Rating (with specific conditions)			
Rated voltage		800 V	300 V
Impulse withstand voltage			
Protection		IP20	NEMA 1

Mounting instructions

Rail	TH 35-7.5, TH 35-15
Wire stripping length	10 mm 0.393 in
Tool	Flat screwdriver Ø 3.5 mm Ø 0.138 in
Torque	0.6 Nm ± 0.1 5.31 lb.in ± 0.885

The connecting capacity data for one Rigid: Solid/Stranded, or one Flexible conductor (when applicable) is a mandatory information required by IEC, UL and CSA standards (Copper conductors). All other data are provided as supplementary information only. For more details, please consult our CB, UL or CSA certificates and technical datasheet available on http://www.TE.com

CE RoHS USR CNR CSA EAC

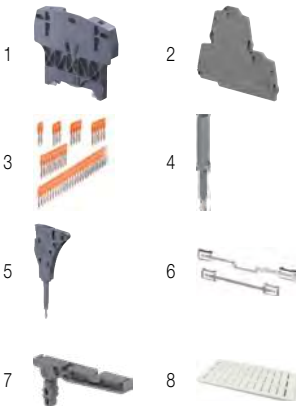

Accessories

	Description			Color	Type	Part Number		Pkg qty	Weight (1 pce) g
1	**End stops**	10 mm	0.394 in	Dark grey	BAZH1	1SNK900102R0000		20	24.00
2	**End sections**	2.55 mm	0.100 in	Dark grey	ES4-D2	1SNK505960R0000		20	4.10
3	**Jumper bars**	2 poles	32 A (IEC)	Orange	JB5-2	1SNK905302R0000		50	1.30
		3 poles	32 A (IEC)		JB5-3	1SNK905303R0000		50	2.00
		4 poles	32 A (IEC)		JB5-4	1SNK905304R0000		50	2.70
		5 poles	32 A (IEC)		JB5-5	1SNK905305R0000		50	3.50
		10 poles	32 A (IEC)		JB5-10	1SNK905310R0000		30	7.10
4	**Test adapters**	For test plugs DIA 2 mm 0.079 in		Dark grey	TP2	1SNK900203R0000		20	1.70
		For test plugs DIA 4 mm 0.157 in			TP4	1SNK900205R0000		20	2.40
5	**Test connectors**	5.2 mm 0.205 in spacing		Dark grey	TC5	1SNK900200R0000		10	5.20
		End module, 5.2 mm 0.205 in			TC5-R1	1SNK900201R0000		10	5.20
6	**Shield connectors**				SHB	1SNK900602R0000		20	4.90
7	**Label holders**			Dark grey	LH-J	1SNK900606R0000		100	0.73
8	**Terminal block markers**	Blank marker		White	MG-CPM 13 41790	1SNB041790R0512		1960	0.23
		Blank card			MC512	1SNK140000R0000		22	9.00
					MC512PA	1SNK149999R0000		20	10.00
		Universal wire markers holder		Grey	UMH	1SNK900611R0000		10	0.20

Complete list of accessories is indicated in the terminal block datasheet including end stops.
Some accessories such as jumper bars may modify the terminal block's ratings: Complete information available in the accessories section of the catalog.

1SNK161090S0201

Technical data valid for copper conductors only.

ZS4-D-CH-DU screw clamp terminal blocks
Component holder - 5.2 mm 0.205 in spacing

ZS4-D-CH

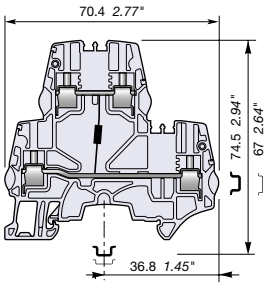

5.2 mm 0.205 in spacing

		4 mm²
		12 AWG

Description

Protect your circuit with one 1N4007 diode.

Ordering details

Description		Color	Type	Part Number		Pkg qty	Weight (1 pce) g
Component holder	Cathode of the blocking diode connected to the upper circuit	Grey	ZS4-D-CH-DU	1SNK505215R0000		50	15.30

Main technical data

Connecting capacity		IEC	UL - CSA
1 conductor per clamp	Rigid: Solid/Stranded	0.2 ... 4 mm²	24 ... 12 AWG
	Flexible without ferrule	0.22 ... 4 mm²	
	Flexible with non insulated ferrule	0.22 ... 4 mm²	24 ... 12 AWG
	Flexible with insulated ferrule	0.22 ... 2.5 mm²	24 ... 14 AWG
	Gauge	A3-B3	
2 conductors per clamp	Rigid: Solid/Stranded	0.2 ... 1.5 mm²	24 ... 16 AWG
	Flexible without ferrule	0.2 ... 1.5 mm²	
	Flexible with twin ferrule	0.22 ... 1.5 mm²	24 ... 16 AWG
Rated current / Rated cross section		29 A / 4 mm²	20 A / 12 AWG
Rated short-time withstand current (1s)		480 A	
Short Circuit Current Rating (with specific conditions)			
Rated voltage		800 V	300 V
Impulse withstand voltage			
Protection		IP20	NEMA 1

Mounting instructions

Rail	TH 35-7.5, TH 35-15
Wire stripping length	10 mm 0.393 in
Tool	Flat screwdriver Ø 3.5 mm Ø 0.138 in
Torque	0.6 Nm ± 0.1 5.31 lb.in ± 0.885

The connecting capacity data for one Rigid: Solid/Stranded, or one Flexible conductor (when applicable) is a mandatory information required by IEC, UL and CSA standards (Copper conductors). All other data are provided as supplementary information only. For more details, please consult our CB, UL or CSA certificates and technical datasheet available on http://www.TE.com

CE RoHS USR CNR CSA EAC

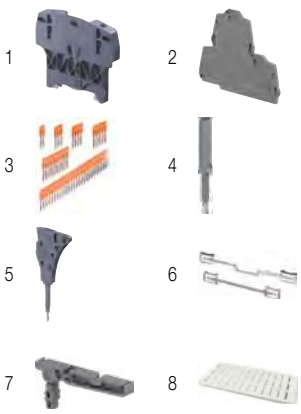

Accessories

	Description			Color	Type	Part Number		Pkg qty	Weight (1 pce) g
1	**End stops**	10 mm	0.394 in	Dark grey	BAZH1	1SNK900102R0000		20	24.00
2	**End sections**	2.55 mm	0.100 in	Dark grey	ES4-D2	1SNK505960R0000		20	4.10
3	**Jumper bars**	2 poles	32 A (IEC)	Orange	JB5-2	1SNK905302R0000		50	1.30
		3 poles	32 A (IEC)		JB5-3	1SNK905303R0000		50	2.00
		4 poles	32 A (IEC)		JB5-4	1SNK905304R0000		50	2.70
		5 poles	32 A (IEC)		JB5-5	1SNK905305R0000		50	3.50
		10 poles	32 A (IEC)		JB5-10	1SNK905310R0000		30	7.10
		50 poles	32 A (IEC)		JB5-50	1SNK905350R0000		10	36.00
4	**Test adapters**	For test plugs DIA 2 mm 0.079 in		Dark grey	TP2	1SNK900203R0000		20	1.70
		For test plugs DIA 4 mm 0.157 in			TP4	1SNK900205R0000		20	2.40
5	**Test connectors**	5.2 mm 0.205 in spacing		Dark grey	TC5	1SNK900200R0000		10	5.20
		End module, 5.2 mm 0.205 in			TC5-R1	1SNK900201R0000		10	5.20
6	**Shield connectors**				SHB	1SNK900602R0000		20	4.90
7	**Label holders**			Dark grey	LH-J	1SNK900606R0000		100	0.73
8	**Terminal block markers**	Blank marker		White	MG-CPM 13 41790	1SNB041790R0512		1960	0.23
		Blank card			MC512	1SNK140000R0000		22	9.00
					MC512PA	1SNK149999R0000		20	10.00
		Universal wire markers holder		Grey	UMH	1SNK900611R0000		10	0.20

Complete list of accessories is indicated in the terminal block datasheet including end stops.
Some accessories such as jumper bars may modify the terminal block's ratings: Complete information available in the accessories section of the catalog.

8

1SNK161091S0201

Technical data valid for copper conductors only.

Secure your measurement operations

The new ZS10-ST test & measurement terminal blocks benefit from our long experience in the energy applications and from the SNK features: performances, ergonomy, common accessories and marking.

High performances

- 10 mm² 6 AWG
- 6 mm² 10 AWG with ferrule
- 50 A (IEC) 53 A (UL
- Worldwide certifications

Rely on our smart design

Insulated short circuit bridges: SC-JB8

Insulated captive test sockets: AJS9
6 colors
compatible with standard
DIA. 4 mm test plugs
(IEC 60010-031)

Circuit separators: CS
For visual separation between
CT & PT circuits

Protecting cover kits: KCO

New ground terminal block: ZS10-PE-R1

Lateral jumper bar: PC8
For CT or PT commoning

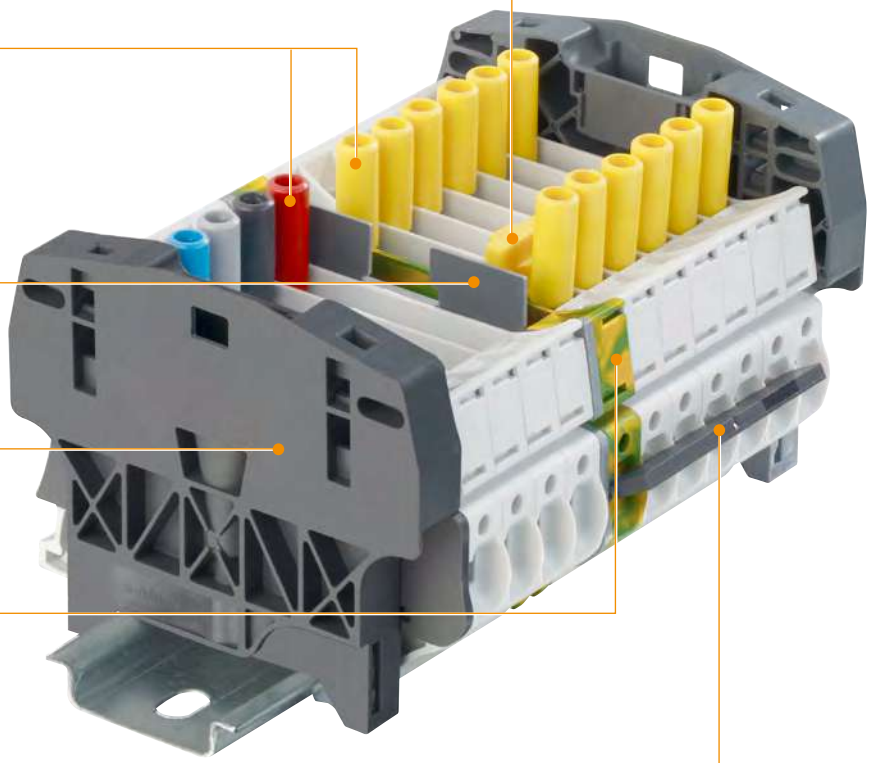

1SNK160057S0201

Assembly with protecting cover

Drilling and centering guide

Guarantee access only to authorized operators

cover can be permanently sealed with a seal or cable tie.

Centering drilling guide for seal or cable tie.

The cover is specially designed to ease its mounting or removal:

– Hook shape on each side for convenient removal with screwdriver

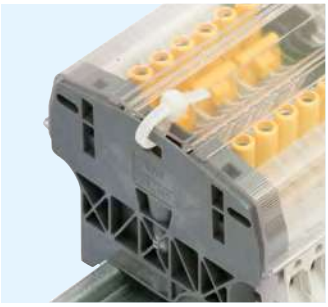

Seal with cable tie

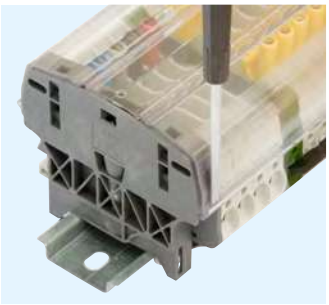

Convenient removal with screwdriver

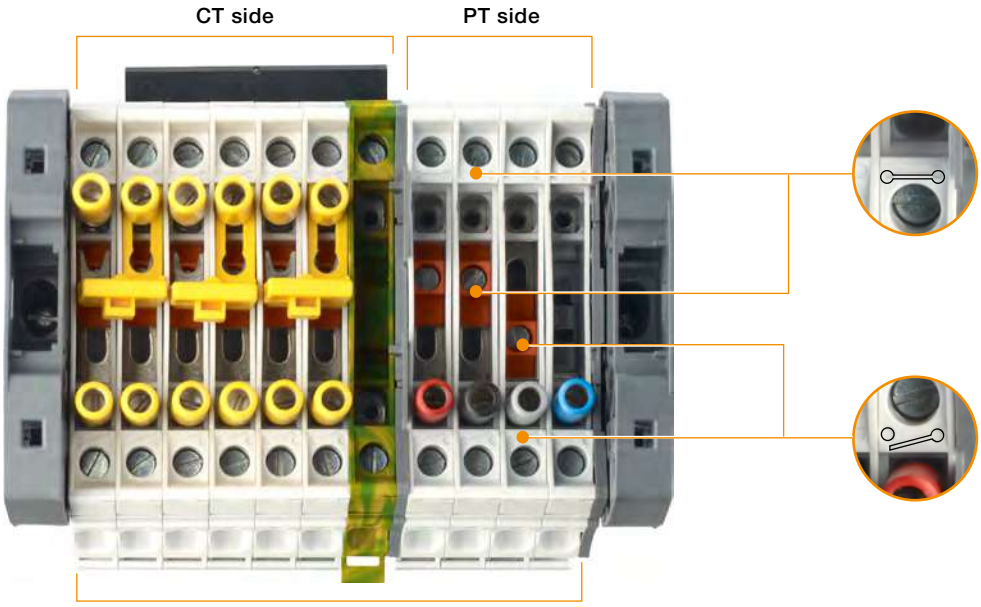

sliding link status: closed

Disconnect sliding link status:
Open and close symbols help to visualize the sliding link position

sliding link status: opened

Short-circuit CT circuits safely and conveniently

1 Fully operated by screwdriver (DIA 3.5 mm)
2 Short-circuited position secured thanks to AJS9 test sockets tightening
3 Adapted hook shape maintain the bridge on terminal block in the non connected position

1SNK160057S0201

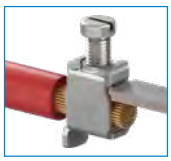

Common point on the transformers

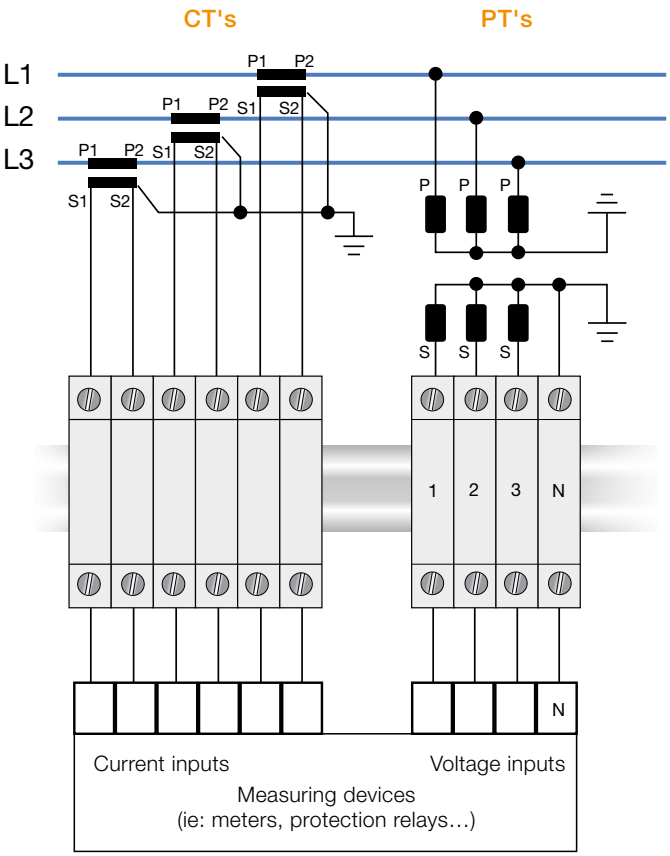

Bill of material optimized

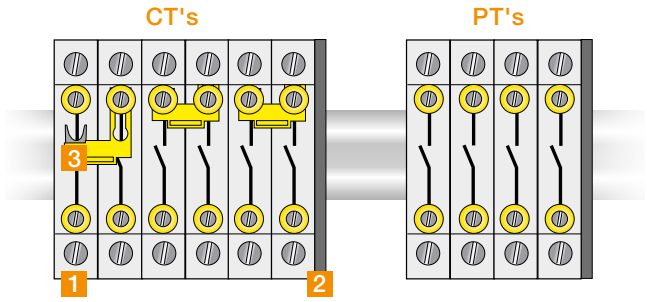

Description	Type	Order code	Qty needed	
			CT's	PT's
1 Terminal block	ZS10-ST-T4	1SNK508311R0000	6	4
2 End section	ES10-ST	1SNK508910R0000	1	1
3 Short-circuit bridges	SC-JB8-2	1SNK900652R0000	3	0

Bill of material with convenient customization (test sockets, feed-through terminals...)

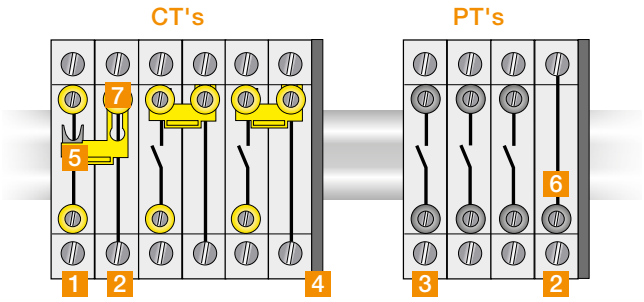

Description	Type	Order code	Qty needed	
			CT's	PT's
1 Terminal block	ZS10-ST-T4	1SNK508311R0000	3	0
2 Terminal block	ZS10-R1	1SNK508011R0000	3	1
3 Terminal block	ZS10-ST-1	1SNK508312R0000	0	3
4 End section	ES10-ST	1SNK508910R0000	1	1
5 Short-circuit bridges	SC-JB8-2	1SNK900652R0000	3	0
6 Test socket	AL4-M3	1SNA206721R0100	0	1
7 Insulated test socket	AJS9	1SNA179726R0200	3	0

1SNK160058S0201

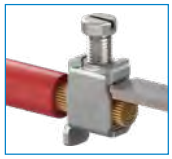

Common point on the terminal block assembly

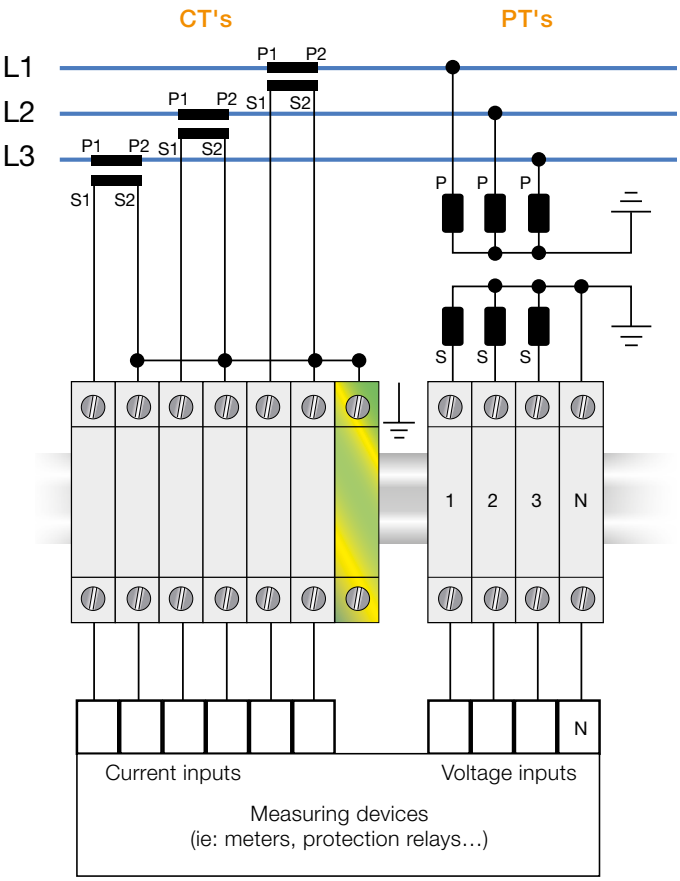

Bill of material optimized

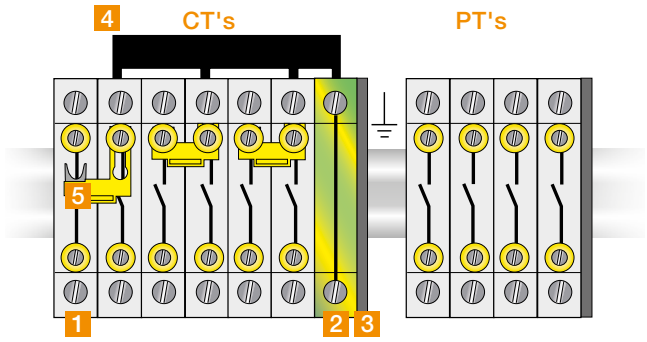

	Description	Type	Order code	Qty needed	
				CT's	PT's
1	Terminal block	ZS10-ST-T4	1SNK508311R0000	6	4
2	Terminal block	ZS10-PE-R1	1SNK508151R0000	1	0
3	End section	ES10-ST	1SNK508910R0000	1	1
4	Lateral jumper bars	PC8-R1	1SNA400711R0600	1	0
5	Short-circuit bridges	SC-JB8-2	1SNK900652R0000	3	0

Bill of material with convenient customization (test sockets, feed-through terminals...)

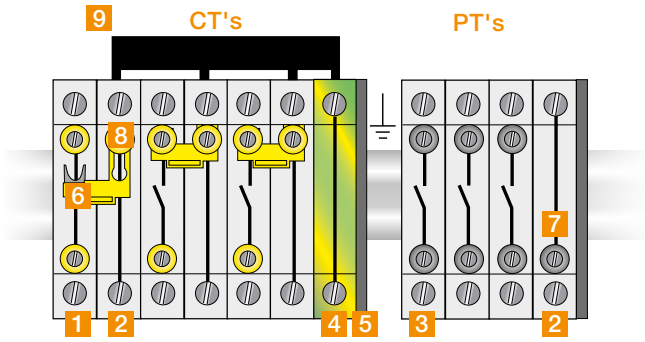

	Description	Type	Order code	Qty needed	
				CT's	PT's
1	Terminal block	ZS10-ST-T4	1SNK508311R0000	3	0
2	Terminal block	ZS10-R1	1SNK508011R0000	3	1
3	Terminal block	ZS10-ST-1	1SNK508312R0000	0	3
4	Terminal block	ZS10-PE-R1	1SNK508151R0000	1	0
5	End section	ES10-ST	1SNK508910R0000	1	1
6	Short-circuit bridges	SC-JB8-2	1SNK900652R0000	3	0
7	Test socket	AL4-M3	1SNA206721R0100	0	1
8	Insulated test socket	AJS9	1SNA179726R0200	3	0
9	Lateral jumper bars	PC8-R1	1SNA400711R0600	1	0

1SNK160058S0201

ZS10-ST screw clamp terminal blocks

Test disconnect with sliding link - 8 mm 0.315 in spacing

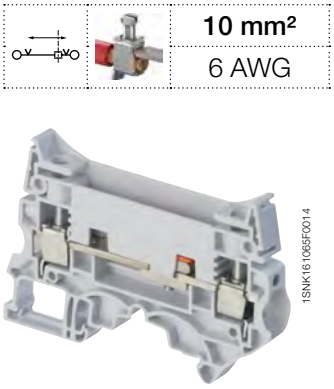

10 mm²	
6 AWG	

1SNK161065F0014

ZS10-ST

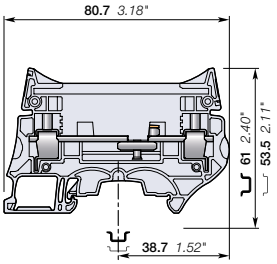

8 mm 0.315 in spacing

Description

- Secure your disconnect operations in control circuits with the robust sliding link operated with a screwdriver,
- Customize ZS10-ST with colored test sockets in order to identify conveniently each phase of the Current Transformer or Potential Transformers secondary circuits,
- Fully compatible with the ZS10-ST-T4 accessories.

Ordering details

Description	Color	Type	Part Number		Pkg qty	Weight (1 pce) g
Disconnect	Grey	ZS10-ST	1SNK508310R0000		25	24.80

Main technical data

Connecting capacity		IEC	UL - CSA
1 conductor per clamp	Rigid: Solid/Stranded	0.5 ... 10 mm²	24 ... 6 AWG
	Flexible without ferrule	0.5 ... 10 mm²	
	Flexible with non insulated ferrule	0.5 ... 10 mm²	24 ... 8 AWG
	Flexible with insulated ferrule	0.5 ... 6 mm²	24 ... 10 AWG
	Gauge	A5-B5	
2 conductors per clamp	Rigid: Solid/Stranded	0.5 ... 4 mm²	20 ... 12 AWG
	Flexible without ferrule	0.5 ... 4 mm²	
	Flexible with twin ferrule	0.5 ... 4 mm²	20 ... 12 AWG
Rated current / Rated cross section		50 A / 10 mm²	53 A / 6 AWG
Rated short-time withstand current (1s)		1200 A	
Rated voltage		630 V	300 V
Impulse withstand voltage		8000 V	
Protection		IP20	NEMA 1

Mounting instructions

Rail	TH 35-7.5, TH 35-15
Wire stripping length	13 mm 0.512 in
Screw clamp Tool	Flat screwdriver Ø 3.5 mm Ø 0.138 in
Torque	1.3 Nm ± 0.3 11.5 lb.in ± 2.65
Disconnect device Tool	Flat screwdriver Ø 3.5 mm Ø 0.138
Torque	0.4 Nm ... 0.6 Nm 3.5 lb.in ... 5.3 lb.in

The connecting capacity data for one Rigid: Solid/Stranded, or one Flexible conductor (when applicable) is a mandatory information required by IEC, UL and CSA standards (Copper conductors). All other data are provided as supplementary information only. For more details, please consult our CB, UL or CSA certificates and technical datasheet available on http://www.TE.com

CE | CB | RoHS | USR CNR | CSA | EAC | BV | DNV

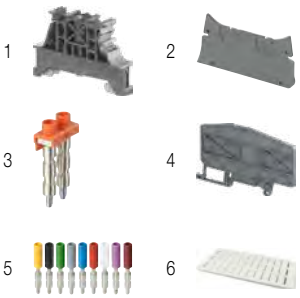

Accessories

	Description			Color	Type	Part Number		Pkg qty	Weight (1 pce) g
1	End stops	10 mm	0.394 in	Dark grey	BAM4	1SNK900001R0000		50	14.00
2	End sections	2 mm	0.079 in	Dark grey	ES10-ST	1SNK508910R0000		20	3.5
3	Jumper bars	2 poles	50 A (IEC)	Orange	JB8-2-R1	1SNK908902R0000		10	7.6
		3 poles	50 A (IEC)		JB8-3-R1	1SNK908903R0000		10	11.6
		4 poles	50 A (IEC)		JB8-4-R1	1SNK908904R0000		10	15.5
		5 poles	50 A (IEC)		JB8-5-R1	1SNK908905R0000		10	19.4
		10 poles	50 A (IEC)		JB8-10-R1	1SNK908910R0000		10	39.00
4	Circuit separators	3 mm	0.118 in	Dark grey	CS-R3	1SNK900107R0000		20	6.40
5	Test sockets	Test sockets DIA 4 mm 0.157 in		Yellow	AJS9	1SNA179726R0200		25	3.60
				Black	AJS9-BK	1SNA206680R1500		25	3.60
				Green	AJS9-GN	1SNA206681R0200		25	3.60
				Grey	AJS9-GR	1SNA206682R0300		25	3.60
				Blue	AJS9-BL	1SNA206683R0400		25	3.60
				Red	AJS9-RD	1SNA206720R1400		25	3.60
				White	AJS9-WH	1SNA206765R0000		25	3.60
				Purple	AJS9-PR	1SNA206772R0000		25	3.60
				Brown	AJS9-BR	1SNA206782R0000		25	3.60
		DIA 4 mm 0.157 in - H=12 mm 0.492 in - M3 screw			AL4-M3	1SNA206721R0100		50	1.10
6	Terminal block markers	Blank marker		White	MG-CPM 13 41791	1SNB041791R0612		1680	0.27
		Blank card			MC812	1SNK160000R0000		22	10.00
					MC812PA	1SNK169999R0000		20	14.00
		Universal wire markers holder		Grey	UMH	1SNK900611R0000		10	0.20

Complete list of accessories is indicated in the terminal block datasheet including end stops.
Some accessories such as jumper bars may modify the terminal block's ratings: Complete information available in the accessories section of the catalog.

ZS10-R1

ZS10-PE-R1

Screw clamp terminal blocks

Description		Color	Type	Part Number		Pkg qty	Weight (1 pce) g
Feed-through	Profile aligned with ZS10-ST...	Grey	ZS10-R1	1SNK508011R0000		25	20.90
Ground	Profile aligned with ZS10-ST...	Green-yellow	ZS10-PE-R1	1SNK508151R0000		25	28.40

1SNK161056S0201

Technical data valid for copper conductors only.

ZS10-ST-1 screw clamp terminal blocks

Test disconnect with sliding link for Potential Transformer circuits - 8 mm 0.315 in spacing

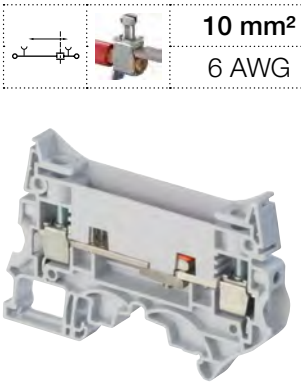

10 mm²
6 AWG

1SNK161069F0014

ZS10-ST-1

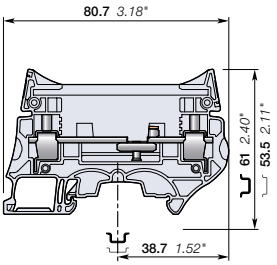

8 mm 0.315 in spacing

Description

Test terminal blocks especially designed for Potential Transformers circuits:

- low profile voltage measurement thanks to the two compact built-in test sockets compatible with DIA 4 mm 0.157 in test plugs,
- Installed with our aligned feed-through and ground terminal blocks, you benefit of a complete and compact solution for your PT circuits.

Ordering details

Description		Color	Type	Part Number		Pkg qty	Weight (1 pce) g
Disconnect	With 2 test sockets DIA 4 mm 0.157 in	Grey	ZS10-ST-1	1SNK508312R0000		25	27.00

Main technical data

Connecting capacity		IEC	UL - CSA
1 conductor per clamp	Rigid: Solid/Stranded	0.5 ... 10 mm²	24 ... 6 AWG
	Flexible without ferrule	0.5 ... 10 mm²	
	Flexible with non insulated ferrule	0.5 ... 10 mm²	24 ... 8 AWG
	Flexible with insulated ferrule	0.5 ... 6 mm²	24 ... 10 AWG
	Gauge	A5-B5	
2 conductors per clamp	Rigid: Solid/Stranded	0.5 ... 4 mm²	20 ... 12 AWG
	Flexible without ferrule	0.5 ... 4 mm²	
	Flexible with twin ferrule	0.5 ... 4 mm²	20 ... 12 AWG
Rated current / Rated cross section		50 A / 10 mm²	53 A / 6 AWG
Rated short-time withstand current (1s)		1200 A	
Rated voltage		630 V	300 V
Impulse withstand voltage		8000 V	
Protection		IP10	NEMA 1

Mounting instructions

Rail	TH 35-7.5, TH 35-15
Wire stripping length	13 mm 0.512 in
Screw clamp Tool	Flat screwdriver Ø 3.5 mm Ø 0.138 in
Torque	1.3 Nm ± 0.3 11.5 lb.in ± 2.65
Disconnect device Tool	Flat screwdriver Ø 3.5 mm Ø 0.138
Torque	0.4 Nm ... 0.6 Nm 3.5 lb.in ... 5.3 lb.in

The connecting capacity data for one Rigid: Solid/Stranded, or one Flexible conductor (when applicable) is a mandatory information required by IEC, UL and CSA standards (Copper conductors). All other data are provided as supplementary information only. For more details, please consult our CB, UL or CSA certificates and technical datasheet available on http://www.TE.com

CE, CB, RoHS, USR CNR, CSA, EAC, BV, DNV

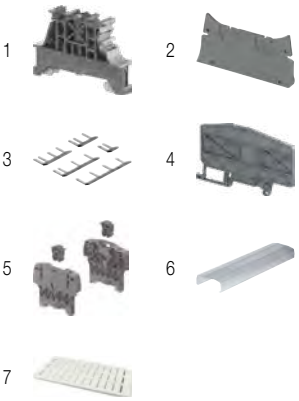

Accessories

	Description			Color	Type	Part Number		Pkg qty	Weight (1 pce) g
1	**End stops**	10 mm	0.394 in	Dark grey	BAM4	1SNK900001R0000		50	14.00
2	**End sections**	2 mm	0.079 in	Dark grey	ES10-ST	1SNK508910R0000		20	3.5
3	**Lateral jumper bars**	10 poles		Black	PC8-10	1SNA163313R2400		10	14.00
		4/6 poles			PC8-R1	1SNA400711R0600		10	6.60
		4/8 poles			PC8-R2	1SNA400712R0700		10	7.80
		4/10 poles			PC8-R3	1SNA400713R0000		10	9.00
		3/4 poles			PC8-R4	1SNA400724R0300		10	4.50
		4/7 poles			PC8-R5	1SNA400842R0000		10	6.60
		2/3 poles			PC8-R6	1SNA400843R0000		10	6.60
		4/6 poles			PC8-R7	1SNA400849R0000		10	6.60
		4/8 poles			PC8-R8	1SNA400850R0000		10	7.80
4	**Circuit separators**	3 mm	0.118 in	Dark grey	CS-R3	1SNK900107R0000		20	6.40
5	**Protecting cover kits**			Dark grey	KCO	1SNK900624R0000		1	47.80
6	**Protecting covers**	1 m 39.4 in length		Transparent	CO	1SNK900604R0000		1	300.00
7	**Terminal block markers**	Blank marker		White	MG-CPM 13 41791	1SNB041791R0612		1680	0.27
		Blank card			MC812	1SNK160000R0000		22	10.00
					MC812PA	1SNK169999R0000		20	14.00
		Universal wire markers holder		Grey	UMH	1SNK900611R0000		10	0.20

Complete list of accessories is indicated in the terminal block datasheet including end stops.
Some accessories such as jumper bars may modify the terminal block's ratings: Complete information available in the accessories section of the catalog.

ZS10-R1 ZS10-PE-R1

Screw clamp terminal blocks

Description		Color	Type	Part Number		Pkg qty	Weight (1 pce) g
Feed-through	Profile aligned with ZS10-ST...	Grey	ZS10-R1	1SNK508011R0000		25	20.90
Ground	Profile aligned with ZS10-ST...	Green-yellow	ZS10-PE-R1	1SNK508151R0000		25	28.40

1SNK161062S0201

Technical data valid for copper conductors only.

ZS10-ST-T4 screw clamp terminal blocks

Test disconnect with sliding link for Current Transformer circuits - 8 mm 0.315 in spacing

10 mm²
6 AWG

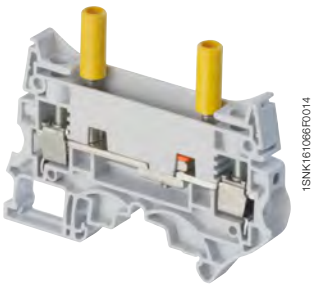

ZS10-ST-T4

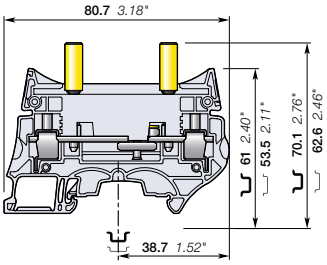

8 mm 0.315 in spacing

Description

Test terminal blocks especially designed for Current Transformers circuits:

- easy and safe current measurement thanks to the two insulated built-in test sockets compatible with IP20 DIA 4 mm 0.157 in test plugs (per IEC60101-031),
- convenient short-circuit operations with the SC-JB insulated sliding bridges.

Ordering details

Description		Color	Type	Part Number		Pkg qty	Weight (1 pce) g
Disconnect	With two yellow test sockets DIA 4 mm 0.157 in	Grey	ZS10-ST-T4	1SNK508311R0000		25	31.90

Main technical data

Connecting capacity		IEC	UL - CSA
1 conductor per clamp	Rigid: Solid/Stranded	0.5 ... 10 mm²	24 ... 6 AWG
	Flexible without ferrule	0.5 ... 10 mm²	
	Flexible with non insulated ferrule	0.5 ... 10 mm²	24 ... 8 AWG
	Flexible with insulated ferrule	0.5 ... 6 mm²	24 ... 10 AWG
	Gauge	A5-B5	
2 conductors per clamp	Rigid: Solid/Stranded	0.5 ... 4 mm²	20 ... 12 AWG
	Flexible without ferrule	0.5 ... 4 mm²	
	Flexible with twin ferrule	0.5 ... 4 mm²	20 ... 12 AWG
Rated current / Rated cross section		50 A / 10 mm²	53 A / 6 AWG
Rated short-time withstand current (1s)		1200 A	
Rated voltage		630 V	300 V
Impulse withstand voltage		8000 V	
Protection		IP20	NEMA 1

Mounting instructions

Rail	TH 35-7.5, TH 35-15
Wire stripping length	13 mm 0.512 in
Screw clamp Tool	Flat screwdriver Ø 3.5 mm Ø 0.138 in
Torque	1.3 Nm ± 0.3 11.5 lb.in ± 2.65
Disconnect device Tool	Flat screwdriver Ø 3.5 mm Ø 0.138
Torque	0.4 Nm ... 0.6 Nm 3.5 lb.in ... 5.3 lb.in
Test socket Tool	Flat screwdriver Ø 3.5 mm Ø 0.138
Torque	0.4 Nm ... 0.6 Nm 3.5 lb.in ... 5.3 lb.in

The connecting capacity data for one Rigid: Solid/Stranded, or one Flexible conductor (when applicable) is a mandatory information required by IEC, UL and CSA standards (Copper conductors). All other data are provided as supplementary information only. For more details, please consult our CB, UL or CSA certificates and technical datasheet available on http://www.TE.com

CE | CB | RoHS | USR CNR | CSA | EAC | BV | DNV

Accessories

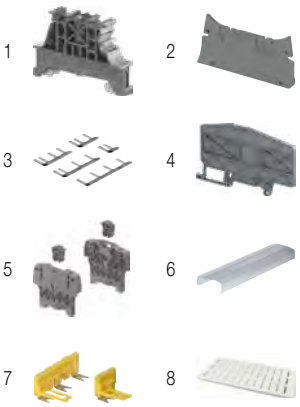

	Description			Color	Type	Part Number		Pkg qty	Weight (1 pce) g
1	**End stops**	10 mm	0.394 in	Dark grey	BAM4	1SNK900001R0000		50	14.00
2	**End sections**	2 mm	0.079 in	Dark grey	ES10-ST	1SNK508910R0000		20	3.5
3	**Lateral jumper bars**	10 poles		Black	PC8-10	1SNA163313R2400		10	14.00
		4/6 poles			PC8-R1	1SNA400711R0600		10	6.60
		4/8 poles			PC8-R2	1SNA400712R0700		10	7.80
		4/10 poles			PC8-R3	1SNA400713R0000		10	9.00
		3/4 poles			PC8-R4	1SNA400724R0300		10	4.50
		4/7 poles			PC8-R5	1SNA400842R0000		10	6.60
		2/3 poles			PC8-R6	1SNA400843R0000		10	6.60
		4/6 poles			PC8-R7	1SNA400849R0000		10	6.60
		4/8 poles			PC8-R8	1SNA400850R0000		10	7.80
4	**Circuit separators**	3 mm	0.118 in	Dark grey	CS-R3	1SNK900107R0000		20	6.40
5	**Protecting cover kits**			Dark grey	KCO	1SNK900624R0000		1	47.80
6	**Protecting covers**	1 m 39.4 in length		Transparent	CO	1SNK900604R0000		1	300.00
7	**Short circuit bridges**	2 poles		Yellow	SC-JB8-2	1SNK900652R0000		25	2.00
		3 poles			SC-JB8-3	1SNK900653R0000		25	3.4
		4 poles			SC-JB8-4	1SNK900654R0000		25	4.7
8	**Terminal block markers**	Blank marker		White	MG-CPM 13 41791	1SNB041791R0612		1680	0.27
		Blank card			MC812	1SNK160000R0000		22	10.00
					MC812PA	1SNK169999R0000		20	14.00
		Universal wire markers holder		Grey	UMH	1SNK900611R0000		10	0.20

Complete list of accessories is indicated in the terminal block datasheet including end stops.
Some accessories such as jumper bars may modify the terminal block's ratings: Complete information available in the accessories section of the catalog.

Screw clamp terminal blocks

Description		Color	Type	Part Number		Pkg qty	Weight (1 pce) g
Feed-through	Profile aligned with ZS10-ST...	Grey	ZS10-R1	1SNK508011R0000		25	20.90
Ground	Profile aligned with ZS10-ST...	Green-yellow	ZS10-PE-R1	1SNK508151R0000		25	28.40

ZS10-R1 ZS10-PE-R1

1SNK161057S0201

Technical data valid for copper conductors only.

ZS10-R1 screw clamp terminal blocks
Feed-through - 8 mm 0.315 in spacing

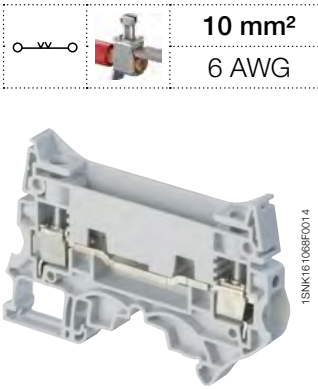

ZS10-R1

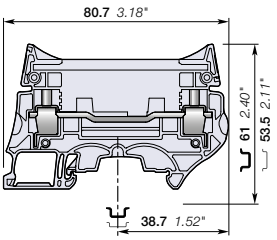

8 mm 0.315 in spacing

		10 mm²
		6 AWG

Description

- With the same profile as the ZS10-ST..., the feed-through ZS10-R1 allows you to fully implement the electrical drawing of your CT or PT circuits,
- Fully compatible with the ZS10-ST... accessories.

Ordering details

Description		Color	Type	Part Number		Pkg qty	Weight (1 pce) g
Feed-through	Profile aligned with ZS10-ST...	Grey	ZS10-R1	1SNK508011R0000		25	20.90

Main technical data

Connecting capacity		IEC	UL - CSA
1 conductor per clamp	Rigid: Solid/Stranded	0.5 ... 10 mm²	24 ... 6 AWG
	Flexible without ferrule	0.5 ... 10 mm²	
	Flexible with non insulated ferrule	0.5 ... 10 mm²	24 ... 8 AWG
	Flexible with insulated ferrule	0.5 ... 6 mm²	24 ... 10 AWG
	Gauge	A5-B5	
2 conductors per clamp	Rigid: Solid/Stranded	0.5 ... 4 mm²	20 ... 12 AWG
	Flexible without ferrule	0.5 ... 4 mm²	
	Flexible with twin ferrule	0.5 ... 4 mm²	20 ... 12 AWG
Rated current / Rated cross section		57 A / 10 mm²	62 A / 6 AWG
Rated short-time withstand current (1s)		1200 A	
Short Circuit Current Rating (with specific conditions)			
Rated voltage		630 V	300 V
Impulse withstand voltage		8000 V	
Protection		IP20	NEMA 1

Mounting instructions

Rail	TH 35-7.5, TH 35-15
Wire stripping length	13 mm 0.512 in
Tool	Flat screwdriver Ø 3.5 mm Ø 0.138 in
Torque	1.3 Nm ± 0.3 11.5 lb.in ± 2.65

The connecting capacity data for one Rigid: Solid/Stranded, or one Flexible conductor (when applicable) is a mandatory information required by IEC, UL and CSA standards (Copper conductors). All other data are provided as supplementary information only. For more details, please consult our CB, UL or CSA certificates and technical datasheet available on http://www.TE.com

CE, CB, RoHS, USR CNR, CSA, EAC, BV, DNV

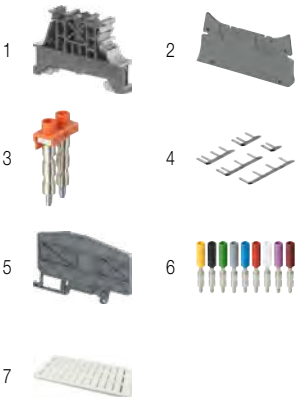

Accessories

	Description			Color	Type	Part Number		Pkg qty	Weight (1 pce) g
1	**End stops**	10 mm	0.394 in	Dark grey	BAM4	1SNK900001R0000		50	14.00
2	**End sections**	2 mm	0.079 in	Dark grey	ES10-ST	1SNK508910R0000		20	3.5
3	**Jumper bars**	2 poles	50 A (IEC)	Orange	JB8-2-R1	1SNK908902R0000		10	7.6
		3 poles	50 A (IEC)		JB8-3-R1	1SNK908903R0000		10	11.6
		4 poles	50 A (IEC)		JB8-4-R1	1SNK908904R0000		10	15.5
		5 poles	50 A (IEC)		JB8-5-R1	1SNK908905R0000		10	19.4
		10 poles	50 A (IEC)		JB8-10-R1	1SNK908910R0000		10	39.00
4	**Lateral jumper bars**	4/7 poles		Black	PC8-R5	1SNA400842R0000		10	6.60
		2/3 poles			PC8-R6	1SNA400843R0000		10	6.60
		4/6 poles			PC8-R7	1SNA400849R0000		10	6.60
		4/8 poles			PC8-R8	1SNA400850R0000		10	7.80
5	**Circuit separators**	3 mm	0.118 in	Dark grey	CS-R3	1SNK900107R0000		20	6.40
6	**Test sockets**	Test sockets DIA 4 mm 0.157 in		Yellow	AJS9	1SNA179726R0200		25	3.60
7	**Terminal block markers**	Blank marker		White	MG-CPM 13 41791	1SNB041791R0612		1680	0.27
		Blank card			MC812	1SNK160000R0000		22	10.00
					MC812PA	1SNK169999R0000		20	14.00
		Universal wire markers holder		Grey	UMH	1SNK900611R0000		10	0.20

Complete list of accessories is indicated in the terminal block datasheet including end stops.
Some accessories such as jumper bars may modify the terminal block's ratings: Complete information available in the accessories section of the catalog.

8

1SNK161059S0201

Technical data valid for copper conductors only.

ZS10-PE-R1 screw clamp terminal blocks

Ground - 8 mm 0.315 in spacing

10 mm²

6 AWG

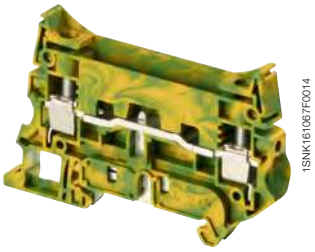

1SNK161067F0014

ZS10-PE-R1

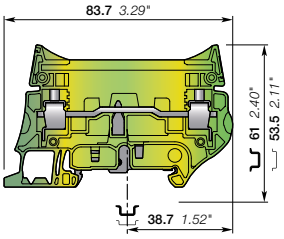

8 mm 0.315 in spacing

Description

- With the same profile as the ZS10-ST..., the ground ZS10-PE-R1 allows you to fully implement the electrical drawing of your CT or PT circuits,
- Fully compatible with the ZS10-ST... accessories,
- Short-circuit performances above the requirements of IEC 60947-7-2 terminal block standard,
- Secured snap on or remove from the rail.

Ordering details

Description		Color	Type	Part Number		Pkg qty	Weight (1 pce) g
Ground	Profile aligned with ZS10-ST...	Green-yellow	ZS10-PE-R1	1SNK508151R0000		25	28.40

Main technical data

Connecting capacity		IEC	UL - CSA
1 conductor per clamp	Rigid: Solid/Stranded	0.5 ... 10 mm²	24 ... 6 AWG
	Flexible without ferrule	0.5 ... 10 mm²	
	Flexible with non insulated ferrule	0.5 ... 10 mm²	24 ... 8 AWG
	Flexible with insulated ferrule	0.5 ... 6 mm²	24 ... 10 AWG
	Gauge	A5-B5	
Rated cross section		10 mm²	6 AWG
Rated short-time withstand current (1s)		1200 A	1596 A
Protection		IP20	NEMA 1

Mounting instructions

Rail		TH 35-7.5, TH 35-15
Wire stripping length		13 mm 0.512 in
Tool		Flat screwdriver Ø 3.5 mm Ø 0.138 in
Torque		1.3 Nm ± 0.3 11.5 lb.in ± 2.65

The connecting capacity data for one Rigid: Solid/Stranded, or one Flexible conductor (when applicable) is a mandatory information required by IEC, UL and CSA standards (Copper conductors). All other data are provided as supplementary information only. For more details, please consult our CB, UL or CSA certificates and technical datasheet available on http://www.TE.com

CE | CB | RoHS | USR CNR | CSA | EAC | BV | DNV

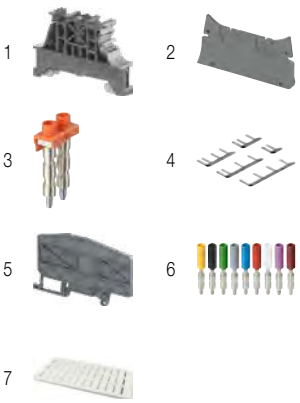

Accessories

	Description			Color	Type	Part Number		Pkg qty	Weight (1 pce) g
1	**End stops**	10 mm	0.394 in	Dark grey	BAM4	1SNK900001R0000		50	14.00
2	**End sections**	2 mm	0.079 in	Dark grey	ES10-ST	1SNK508910R0000		20	3.5
3	**Jumper bars**	2 poles	50 A (IEC)	Orange	JB8-2-R1	1SNK908902R0000		10	7.6
		3 poles	50 A (IEC)		JB8-3-R1	1SNK908903R0000		10	11.6
		4 poles	50 A (IEC)		JB8-4-R1	1SNK908904R0000		10	15.5
		5 poles	50 A (IEC)		JB8-5-R1	1SNK908905R0000		10	19.4
		10 poles	50 A (IEC)		JB8-10-R1	1SNK908910R0000		10	39.00
4	**Lateral jumper bars**	4/7 poles		Black	PC8-R5	1SNA400842R0000		10	6.60
		2/3 poles			PC8-R6	1SNA400843R0000		10	6.60
		4/6 poles			PC8-R7	1SNA400849R0000		10	6.60
		4/8 poles			PC8-R8	1SNA400850R0000		10	7.80
5	**Circuit separators**	3 mm	0.118 in	Dark grey	CS-R3	1SNK900107R0000		20	6.40
6	**Test sockets**	Test sockets DIA 4 mm 0.157 in		Yellow	AJS9	1SNA179726R0200		25	3.60
7	**Terminal block markers**	Blank marker		White	MG-CPM 13 41791	1SNB041791R0612		1680	0.27
		Blank card			MC812	1SNK160000R0000		22	10.00
					MC812PA	1SNK169999R0000		20	14.00
		Universal wire markers holder		Grey	UMH	1SNK900611R0000		10	0.20

Complete list of accessories is indicated in the terminal block datasheet including end stops.
Some accessories such as jumper bars may modify the terminal block's ratings: Complete information available in the accessories section of the catalog.

1SNK161058S0201

Technical data valid for copper conductors only.

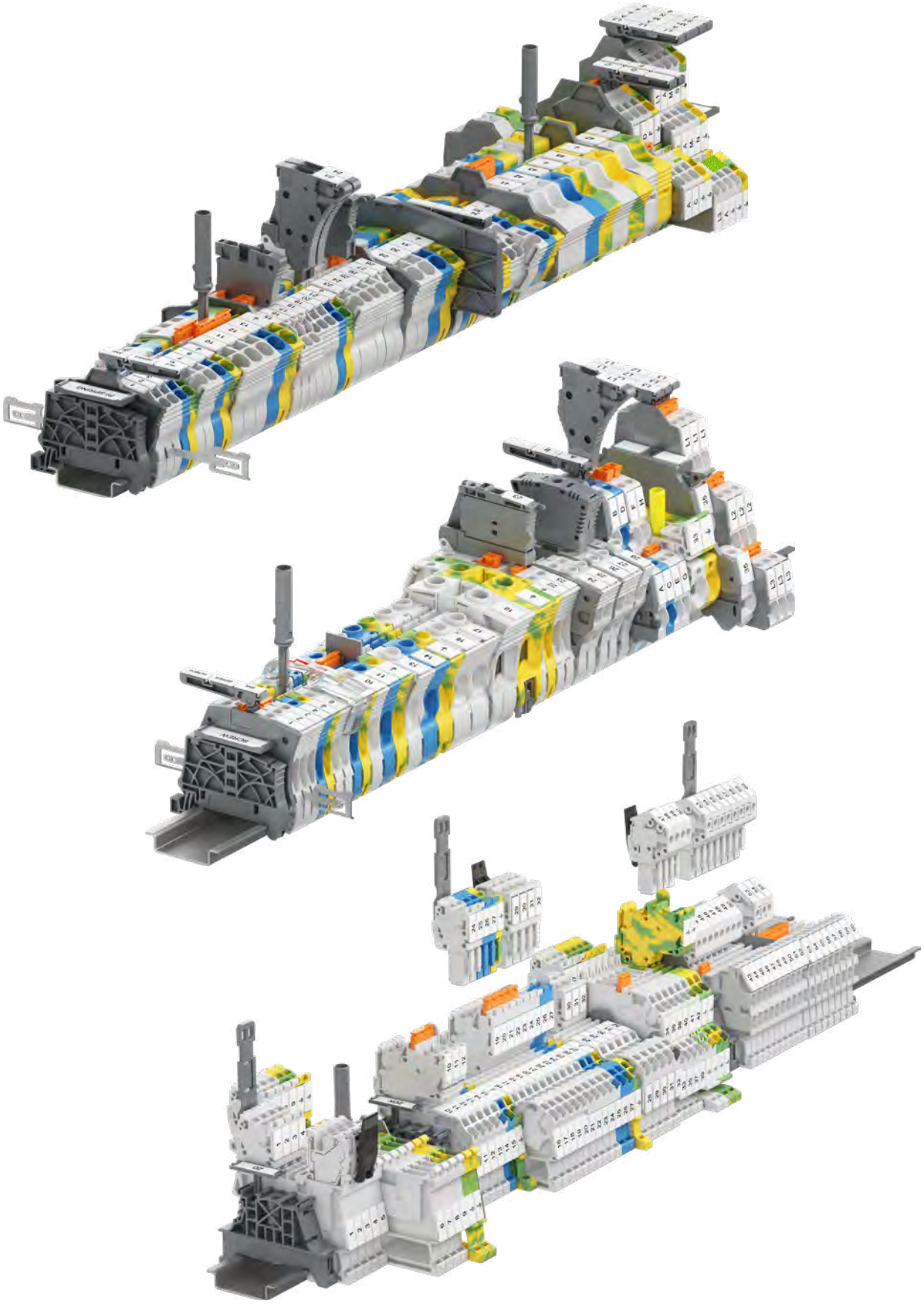

Summary_9

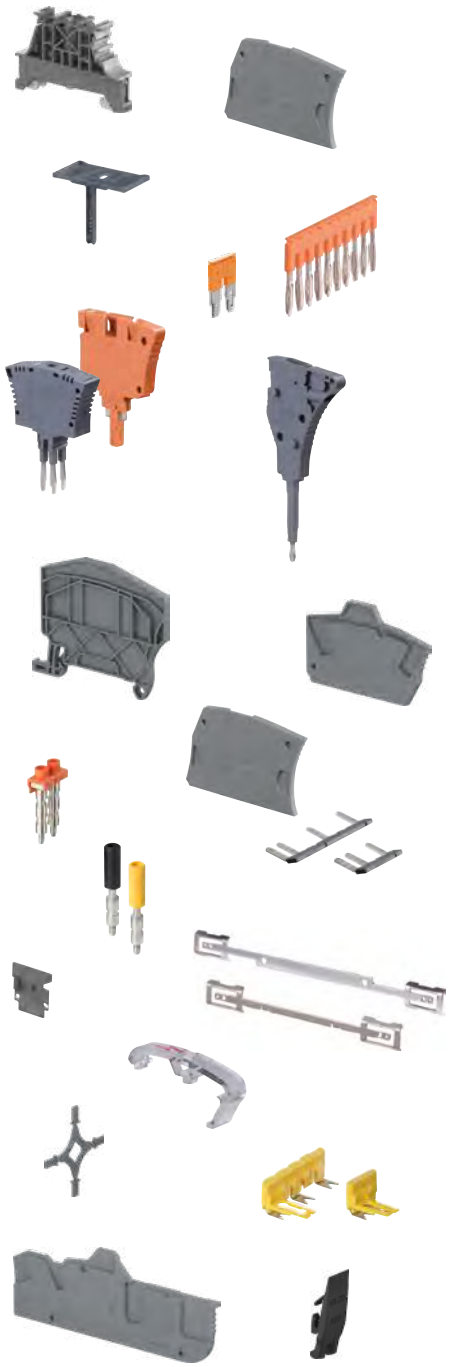

Common terminal block accessories

Mounting rail	**PR**	310-313

SNK series, common terminal block accessories

Screw end stops	**BAM4, BAZH1**	314
Screwless end stops	**BAZ1**	315
Label holders	**LH, LH-R1**	316
	LH-J	317
Screwless jumper bars	**JB5**	318
	JB6	319
	JB8	320
	JB10	321
	JB12	322
Cross spacing jumpers	**JB85-3**	323
Test adapters	**TP2, TP4**	324
Test connectors	**TC5**	325
Component plugs	**PG5-R2**	326
	PG5, PG5-R1	327
Screwdrivers	**TO**	328
Crimping tools	**PS**	328

PI-Spring terminal block accessories

End sections	**EK**	329-331
Circuit separators	**CS-R2, CS-R3**	332-333
Shield connectors	**SHBP, SHB**	334

Screw clamp terminal block accessories

End sections	**ES**	335-336
Screw jumper bars	**JB8**	337
	JB16, JB22	338
	JB26	339
	BJMI31, BJMI36	340
Lateral jumper bars	**PC8, PC81**	341
Circuit separator	**CS, CS-R1**	342
Shield connectors	**SHBS, SHB**	343
Protecting covers	**PL**	344
	CO, KCO	345
Short circuit bridges	**SC-JB8**	346
Test sockets	**AJS9**	347

Pluggable terminal block accessories

End sections	**EDK, EDS**	348-349
Coding pegs	**COP**	350
Locking devices	**VR**	350

1SNK500072F0000

PR30

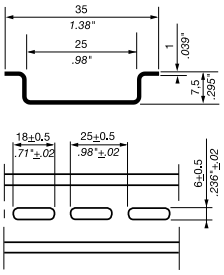

2000 mm 78.74 in spacing

Description

- Pre-punched symmetrical mounting rail,
- The slotted holes ease the mounting and allow to use existing and/or numerous fixings,
- Particularly well designed for fixing onto back-plates and for terminal assemblies of small dimensions.

Ordering details

Description	Color	Type	Part Number		Pkg meter	Weight (1 pce) g
Prepunched rail		PR30	1SNA173220R0500		2	328.00

Please note that for all rails: 1 part number equal 1 meter (39 in). Packing of 2 meters (78 in) minimum.
Check that your order quantity is a multiple of 2.

Main technical data

Material	Zinc plating and passivation steel	
Rail	TH 35-7.5	
	IEC	UL - CSA
Equivalent E-Cu cross section		

All the main technical data provided are "manufacturer" values.

RoHS
RoHS

Mounting instructions

- In order to guarantee the performances and security of your installation, please ensure the rail and its fixings can withstand the static and dynamic loads of the components mounted on it;
- To prevent the rail from flexing (1 mm 0.039 in rail thickness only), fixing is recommended every 250 mm 9.84 in;
- To prevent any issues during mounting, screw heads used for rail fixing should not protrude from the rail (7,5 mm 0.295 in rail height only).

1SNK500073F0000

PR3.Z2

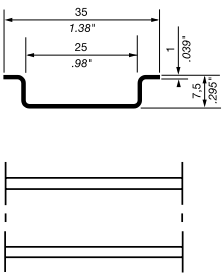

2000 mm 78.74 in spacing

Description

- Symmetrical mounting rail complying with IEC60715,
- Particularly well designed for fixing onto back-plates and for terminal assemblies of small dimensions.

Ordering details

Description	Color	Type	Part Number		Pkg meter	Weight (1 pce) g
		PR3.Z2	1SNA174300R1700		2	718.00

Please note that for all rails: 1 part number equal 1 meter (39 in). Packing of 2 meters (78 in) minimum.
Check that your order quantity is a multiple of 2.

Main technical data

Material	Zinc plating and passivation steel	
Rail	TH 35-7.5	
	IEC	UL - CSA
Equivalent E-Cu cross section	16 mm²	

All the main technical data provided are "manufacturer" values.

RoHS
RoHS

Mounting instructions

- In order to guarantee the performances and security of your installation, please ensure the rail and its fixings can withstand the static and dynamic loads of the components mounted on it;
- To prevent the rail from flexing (1 mm 0.039 in rail thickness only), fixing is recommended every 250 mm 9.84 in;
- To prevent any issues during mounting, screw heads used for rail fixing should not protrude from the rail (7,5 mm 0.295 in rail height only).

1SNK160017S0201

Technical data valid for copper conductors only.

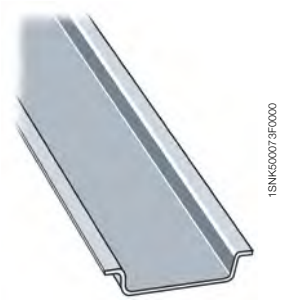

PR3.G2

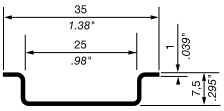

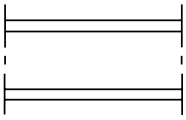

2000 mm 78.74 in spacing

Description

- Symmetrical mounting rail made of galvanised steel, complying with IEC60715,
- Particularly well designed for fixing onto back-plates and for terminal assemblies of small dimensions.

Ordering details

Description	Color	Type	Part Number		Pkg meter	Weight (1 pce) g
		PR3.G2	1SNA164800R0300		2	718.00

Please note that for all rails: 1 part number equal 1 meter (39 in). Packing of 2 meters (78 in) minimum.
Check that your order quantity is a multiple of 2.

Main technical data

Material	Galvanised steel	
Rail	TH 35-7.5	
	IEC	UL - CSA
Equivalent E-Cu cross section	16 mm²	

All the main technical data provided are "manufacturer" values.

RoHS
RoHS

Mounting instructions

- In order to guarantee the performances and security of your installation, please ensure the rail and its fixings can withstand the static and dynamic loads of the components mounted on it;
- To prevent the rail from flexing (1 mm 0.039 in rail thickness only), fixing is recommended every 250 mm 9.84 in;
- To prevent any issues during mounting, screw heads used for rail fixing should not protrude from the rail (7,5 mm 0.295 in rail height only).

PR50

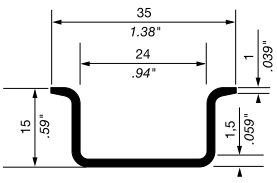

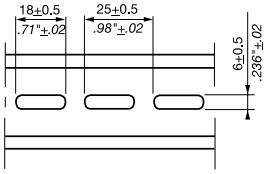

2000 mm 78.74 in spacing

Description

- Pre-punched symmetrical mounting rail,
- The slotted holes ease the mounting and allow to use existing and/or numerous fixings.

Ordering details

Description	Color	Type	Part Number		Pkg meter	Weight (1 pce) g
Preprunched rail		PR50	1SNA178529R0400		2	1288.00

Please note that for all rails: 1 part number equal 1 meter (39 in). Packing of 2 meters (78 in) minimum.
Check that your order quantity is a multiple of 2.

Main technical data

Material	Zinc plating and passivation steel	
Rail	TH 35-15	
	IEC	UL - CSA
Equivalent E-Cu cross section		

All the main technical data provided are "manufacturer" values.

RoHS
RoHS

Mounting instructions

- In order to guarantee the performances and security of your installation, please ensure the rail and its fixings can withstand the static and dynamic loads of the components mounted on it;
- To prevent the rail from flexing, fixing is recommended every 700 mm 27.6 in;
- In order to increase the accessibility of your terminal assembly, we recommend the use of our rail offset brackets EM45 (order code 1SNA008521R2600) for a 45° orientation of the rail.

Technical data valid for copper conductors only.

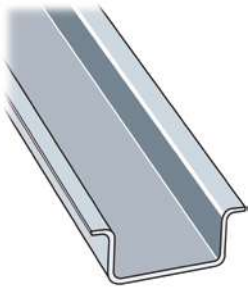

1SNK500075F0000

PR5

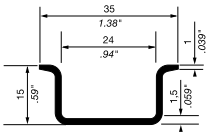

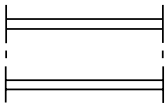

2000 mm 78.74 in spacing

Description

– Symmetrical mounting rail.

Ordering details

Description	Color	Type	Part Number		Pkg meter	Weight (1 pce) g
		PR5	1SNA168700R2200		2	1200.00

Please note that for all rails: 1 part number equal 1 meter (39 in). Packing of 2 meters (78 in) minimum.
Check that your order quantity is a multiple of 2.

Main technical data

Material	Zinc plating and passivation steel		
Rail	TH 35-15		
	IEC	UL - CSA	
Equivalent E-Cu cross section			

All the main technical data provided are "manufacturer" values.

RoHS
RoHS

Mounting instructions

– In order to guarantee the performances and security of your installation, please ensure the rail and its fixings can withstand the static and dynamic loads of the components mounted on it;
– To prevent the rail from flexing, fixing is recommended every 700 mm 27.6 in;
– In order to increase the accessibility of your terminal assembly, we recommend the use of our rail offset brackets EM45 (order code 1SNA008521R2600) for a 45° orientation of the rail.

1SNK500076F0000

PR4

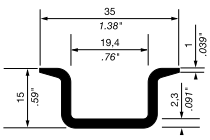

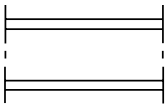

2000 mm 78.74 in spacing

Description

– Symmetrical mounting rail complying with IEC60715,
– The rigidity of the rail is maximised by the 2.3 mm 0.090 in thickness of the rail, and by its solid, non slotted construction,
– PR4 TH 35-15 is the most rigid mounting rail solution and it can suppo

Ordering details

Description	Color	Type	Part Number		Pkg meter	Weight (1 pce) g
Recommended for SNK ground terminal blocks up to 35 mm² 2 AWG		PR4	1SNA168500R1200		2	915.00

Please note that for all rails: 1 part number equal 1 meter (39 in). Packing of 2 meters (78 in) minimum.
Check that your order quantity is a multiple of 2.

Main technical data

Material	Zinc plating and passivation steel		
Rail	TH 35-15		
	IEC	UL - CSA	
Equivalent E-Cu cross section	50 mm²	2 AWG	

All the main technical data provided are "manufacturer" values.

RoHS
RoHS

Mounting instructions

– In order to guarantee the performances and security of your installation, please ensure the rail and its fixings can withstand the static and dynamic loads of the components mounted on it;
– To prevent the rail from flexing, fixing is recommended every 700 mm 27.6 in;
– In order to increase the accessibility of your terminal assembly, we recommend the use of our rail offset brackets EM45 (order code 1SNA008521R2600) for a 45° orientation of the rail.

Technical data valid for copper conductors only.

1SNK160041S0201

PRH2R

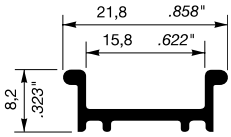

2000 mm 78.74 in spacing

Description

- Symmetrical mounting rail type 2 reinforced,
- Particularly well adapted for railway applications.

Ordering details

Description	Color	Type	Part Numbers		Pkg pce	Weight (1 pce) g
		PRH2R	1SNA163350R1500		2	278.00

Please note that for all rails: 1 part number equal 1 meter (39 in). Packing of 2 meters (78 in) minimum.
Check that your order quantity is a multiple of 2.

Main technical data

Material	Aluminium alloy	
Rail	Type 2	
	IEC	UL - CSA
Equivalent E-Cu cross section		

All the main technical data provided are "manufacturer" values.

RoHS
RoHS

Mounting instructions

- In order to guarantee the performances and security of your installation, please ensure the rail and its fixings can withstand the static and dynamic loads of the components mounted on it,
- To prevent the rail from flexing, fixing is recommended every 250 mm 9.84 in,
- To prevent any issues during mounting, screw heads used for rail fixing should not protrude from the rail.

BAM4

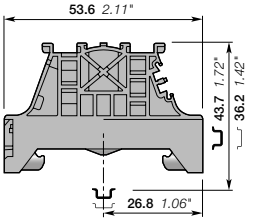

10 mm 0.394 in spacing

Mounting instructions

BAM4 screw end stops

Description

- Give efficient support to the SNK terminal blocks assemblies thanks to the BAM4 double gripping rail contact,
- Ease the assemblies identification with the BAM4 marking location compatible with all SNK markers and labels.

Ordering details

Description	Color	Type	Part Number		Pkg qty	Weight (1 pce) g
10 mm 0.394 in spacing	Dark grey	BAM4	1SNK900001R0000		50	14.00

Main technical data

Material specifications	Insulating material	Polyamide	
	Flammability	V0	
	NF F 16 101	I2F2	
Ambient temperature min/max	Service IEC 60068-2-1	-55 ... +110 °C	-67 ... +230 °F
	Storage	-55 ... +110 °C	-67 ... +230 °F
	Installing	-5 ... +40 °C	+23 ... +104 °F

Mounting instructions

Rail	TH 35-7.5, TH 35-15
Tool	Flat screwdriver Ø 5.5 mm Ø 0.217 in
Torque	0.9 Nm ± 0.1 7.08 lb.in ± 0.88

All the main technical data provided are "manufacturer" values

RoHS

Accessories

Description		Color	Type	Part Number		Pkg qty	Weight (1 pce) g
Terminal block markers	compatible with MG3	White	MG-CPM 13 41791	1SNB041791R0612		1680	0.27
Blank card	In polycarbonate		MC812	1SNK160000R0000		22	10.00
	In polyamide		MC812PA	1SNK169999R0000		20	14.00
Label holder	10 mm 0.394 in width	Dark grey	LH	1SNK900605R0000		50	0.60
	19.5 mm 0.768 in width		LH-R1	1SNK900607R0000		50	1.10
Universal wire markers holder	5.2 mm 0.205 in spacing	Grey	UMH	1SNK900611R0000		10	0.20

BAZH1

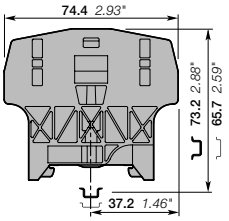

10 mm 0.394 in spacing

BAZH1 screw end stops

Description

- Give efficient support to the SNK double deck or power terminal blocks assemblies thanks to the BAZH1 double gripping rail contact,
- Ease the assemblies identification with label holders.

Ordering details

Description	Color	Type	Part Number		Pkg qty	Weight (1 pce) g
10 mm 0.394 in spacing	Dark grey	BAZH1	1SNK900102R0000		20	24.00

Main technical data

Material specifications	Insulating material	Polyamide	
	Flammability	V0	
	NF F 16 101	I2F2	
Ambient temperature min/max	Service IEC 60068-2-1	-55 ... +110 °C	-67 ... +230 °F
	Storage	-55 ... +110 °C	-67 ... +230 °F
	Installing	-5 ... +40 °C	+23 ... +104 °F

Mounting instructions

Rail	TH 35-7.5
Tool	Flat screwdriver Ø 5.5 mm Ø 0.217 in
Torque	1.3 Nm ± 0.1 11.4 lb.in ± 0.88

All the main technical data provided are "manufacturer" values

RoHS

Accessories

Description		Color	Type	Part Number		Pkg qty	Weight (1 pce) g
Terminal block markers	compatible with MG3	White	MG-CPM 13 41791	1SNB041791R0612		1680	0.27
Blank card	In polycarbonate		MC812	1SNK160000R0000		22	10.00
	In polyamide		MC812PA	1SNK169999R0000		20	14.00
Label holder	10 mm 0.394 in width	Dark grey	LH	1SNK900605R0000		50	0.60
	19.5 mm 0.768 in width		LH-R1	1SNK900607R0000		50	1.10
Universal wire markers holder	5.2 mm 0.205 in spacing	Grey	UMH	1SNK900611R0000		10	0.20

Technical data valid for copper conductors only.

1SNK160026S0201

BAZ1

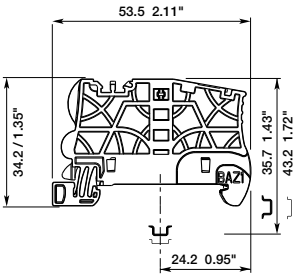

5.2 mm 0.205 in spacing

BAZ1 screwless end stops

Description

- Reduce the size of your terminal block assemblies with the screwless reduced spacing BAZ1 end stop,
- Ease the assemblies identification with various markers and label holders.

Ordering details

Description	Color	Type	Part Number		Pkg qty	Weight (1 pce) g
5.2 mm 0.205 in spacing	Dark grey	BAZ1	1SNK900002R0000		50	5.30

Main technical data

Material specifications	Insulating material	Polyamide	
	Flammability	V0	
	NF F 16 101	I2F2	
Ambient temperature min/max	Service IEC 60068-2-1	-55 ... +110 °C	-67 ... +230 °F
	Storage	-55 ... +110 °C	-67 ... +230 °F
	Installing	-5 ... +40 °C	+23 ... +104 °F

All the main technical data provided are "manufacturer" values

RoHS
RoHS

Mounting instructions

Rail		TH 35-7.5

Accessories

Description		Color	Type	Part Number		Pkg qty	Weight (1 pce) g
Terminal block markers	compatible with MG3	White	MG-CPM 13 41790	1SNB041790R0512		1960	0.23
Blank card	compatible with HTP500		MC512	1SNK140000R0000		22	9.00
	compatible with AMS600		MC512PA	1SNK149999R0000		20	10.00
Label holder	10 mm 0.394 in width	Dark grey	LH	1SNK900605R0000		50	0.60
	19.5 mm 0.768 in width		LH-R1	1SNK900607R0000		50	1.10
Universal wire markers holder	5.2 mm 0.205 in spacing	Grey	UMH	1SNK900611R0000		10	0.20

Technical data valid for copper conductors only.

1SNK160334V0014

LH

10 mm 0.394 in spacing

LH label holder

Description

- Easily identify your terminal blocks assembly with white or yellow labels,
- Adjustable in height for best visibility,
- Compatible with all SNK end stops.

Ordering details

Description	Color	Type	Part Number	Pkg qty	Weight (1 pce) g
10 mm 0.394 in width	Dark grey	LH	1SNK900605R0000	50	0.60

Main technical data

Material specifications	Insulating material	Polyamide	
	Flammability	V0	
	NF F 16 101	I2F2	
Ambient temperature min/max	Service IEC 60068-2-1	-55 ... +110 °C	-67 ... +230 °F
	Storage	-55 ... +110 °C	-67 ... +230 °F
	Installing	-5 ... +40 °C	+23 ... +104 °F

All the main technical data provided are "manufacturer" values

RoHS
RoHS

Accessories

Description		Color	Type	Part Number	Pkg qty	Weight (1 pce) g
Self-adhesive precut blank label	compatible with HTP500	White	MCLH	1SNK900630R0000	25	10.00
Self-adhesive precut blank label	compatible with HTP500	White	RCPEAD-TT	1SNA235158R0100	25	9.80
		Yellow	RCPEAD-TT-YL	1SNA235159R0200	25	12.10
Pre-printed cover marker	Protection for RCPEAD markers	Transparent	EPR2	1SNA399726R0700	10	4.00
Precut blank label	compatible with MG3	White	MG-TAR 45490	1SNB045490R8530	1650	0.371
Self-adhesive precut blank label	compatible with MG3	Yellow	MG-TAA 49448	1SNB049448R8530	825	0.55
		White	MG-TAA 49498	1SNB049498R8530	825	0.55
Self-adhesive precut blank label	compatible with HTP500	Yellow	MCLH-YL	1SNK900633R0000	25	10.00

1SNK160335V0014

LH

19.5 mm 0.768 in spacing

Mounting instructions

LH-R1 label holder

Description

- Easily identify your terminal blocks assembly with white or yellow labels,
- Adjustable in height for best visibility,
- Compatible with all SNK end stops.

Ordering details

Description	Color	Type	Part Number	Pkg qty	Weight (1 pce) g
19.5 mm 0.768 in width	Dark grey	LH-R1	1SNK900607R0000	50	1.10

Main technical data

Material specifications	Insulating material	Polyamide	
	Flammability	V0	
	NF F 16 101	I2F2	
Ambient temperature min/max	Service IEC 60068-2-1	-55 ... +110 °C	-67 ... +230 °F
	Storage	-55 ... +110 °C	-67 ... +230 °F
	Installing	-5 ... +40 °C	+23 ... +104 °F

All the main technical data provided are "manufacturer" values

RoHS
RoHS

Accessories

Description		Color	Type	Part Number	Pkg qty	Weight (1 pce) g
Self-adhesive precut blank label	compatible with HTP500	White	MCLH-R1	1SNK900631R0000	25	10.00
Precut blank label	compatible with AMS600	White	RCPEB	1SNA178430R0500	1	
	Protection for RCPEB markers	Transparent	EPR1	1SNA178431R2200	1	0.05
Self-adhesive precut blank label	compatible with HTP500	White	PIB2-TT	1SNA235155R2600	25	9.70
		Yellow	PIB2-TT-YL	1SNA235157R2000	25	9.40
Precut blank label	compatible with MG3	White	MG-TAR 45194	1SNB045194R1735	900	0.62
Self-adhesive precut blank label		Yellow	MG-TAA 49148	1SNB049148R1735	450	0.91
		White	MG-TAA 49198	1SNB049198R1735	450	0.91
Self-adhesive precut blank label	compatible with HTP500	Yellow	MCLH-R1-YL	1SNK900634R0000	25	10.00

1SNK160023S0201

Technical data valid for copper conductors only.

LH

4.8 mm 0.189 in spacing

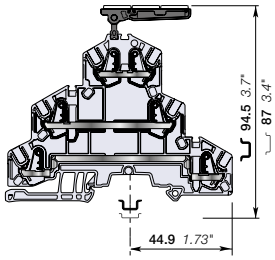

LH-J label holder

Description

Easily identify your block with three standard 5.2 mm 0.205 in spacing SNK markers. It fits in the jumper channel of the SNK terminal blocks.

Ordering details

Description	Color	Type	Part Number		Pkg qty	Weight (1 pce) g
Rotating label holder with three SNK markers housings - 4.8 mm 0.189 in spacing	Dark grey	LH-J	1SNK900606R0000		100	0.73

Main technical data

Material specifications	Insulating material	Polyamide	
	Flammability	V0	
	NF F 16 101	I2F2	
Ambient temperature min/max	Service IEC 60068-2-1	-55 ... +110 °C	-67 ... +230 °F
	Storage	-55 ... +110 °C	-67 ... +230 °F
	Installing	-5 ... +40 °C	+23 ... +104 °F

All the main technical data provided are "manufacturer" values

RoHS
RoHS

Accessories

Description		Color	Type	Part Number		Pkg qty	Weight (1 pce) g
Blank marker	compatible with MG3	White	MG-CPM 13 41790	1SNB041790R0512		1960	0.23
Blank card	compatible with HTP500	White	MC512	1SNK140000R0000		22	9.00
	compatible with AMS600	White	MC512PA	1SNK149999R0000		20	10.00
Universal wire markers holder	5.2 mm 0.205 in spacing	Grey	UMH	1SNK900611R0000		10	0.20

Technical data valid for copper conductors only.

JB5 screwless jumper bars
Common terminal block accessories

JB5

5.2 mm 0.205 in spacing

Description

Facilitate & secure your jumper bar assembly process:
- Screwless mounting,
- Pre-cut poles for alternated jumpering between terminal blocks,
- Insulated,
- Positive locking,
- Perfectly adapted to low level electrical contact (20mA, 50mV).

Ordering details

Description		Color	Type	Part Number		Pkg qty	Weight (1 pce) g
5.2 mm 0.205 in spacing	2 poles	Orange	JB5-2	1SNK905302R0000		50	1.30
	3 poles		JB5-3	1SNK905303R0000		50	2.00
	4 poles		JB5-4	1SNK905304R0000		50	2.70
	5 poles		JB5-5	1SNK905305R0000		50	3.50
	10 poles		JB5-10	1SNK905310R0000		30	7.10
	50 poles		JB5-50	1SNK905350R0000		10	36.00

Main technical data

Material specifications	Insulating material	Polyamide	
	Flammability	V0	
	NF F 16 101	I2F3	
Ambient temperature min/max	Service IEC 60068-2-1	-55 ... +110 °C	-67 ... +230 °F
	Storage	-55 ... +110 °C	-67 ... +230 °F
	Installing	-5 ... +40 °C	+23 ... +104 °F

		IEC	UL - CSA	Ex e
Rated current		32 A	30 A	
Rated voltage	1 - Standard use	1000 V	600 V	Please
	2 - Cut extremities	800 V	300 V	consult
	3 - Cut poles	630 V	300 V	us
	4 - Alternated poles	400 V	150 V	
	5 - Alternated poles with cut extremities	400 V	150 V	
Impulse withstand voltage		8000 V		
Protection		IP20	NEMA 1	

All the main technical data are indicative "manufacturer" values.

RoHS
RoHS

Mounting instructions

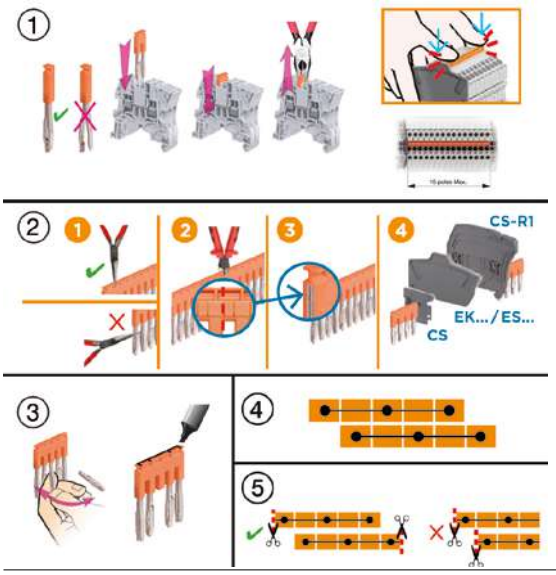

1 - Standard use

2 - Cut extremities

For voltage rating > 50 V and Uimp > 2.5 KV, the below accessories must be installed on the cut side of the jumper to guarantee IP20 and voltage rating:

ZS...	Feed-through	CS circuit separator
	Double deck / triple deck	ES... end section
ZK...	All functions	EK... end section

Ensure a good straight cut by positioning the cutting tool on the vertical snicks of the insulated part of the jumper.

15 poles max. recommended for convenient mounting.

3 - Cut poles

4 - Alternated poles

5 - Alternated poles with cut extremities

When using cut jumpers, cut extremities should be placed oppositely to allow end sections / circuit separators placement at each cut extremities.

For all other applications, please consult us.

Technical data valid for copper conductors only.

1SNK160027S0201

JB6 screwless jumper bars
Common terminal block accessories

1SNK160143F0014

JB6

6 mm 0.236 in spacing

Description

Facilitate & secure your jumper bar assembly process:
- Screwless mounting,
- Pre-cut poles for alternated jumpering between terminal blocks,
- Insulated,
- Positive locking,
- Perfectly adapted to low level electrical contact (20mA, 50mV).

Ordering details

Description		Color	Type	Part Number	Pkg qty	Weight (1 pce) g
6 mm 0.236 in spacing	2 poles	Orange	JB6-2	1SNK906302R0000	50	1.30
	3 poles		JB6-3	1SNK906303R0000	50	2.10
	4 poles		JB6-4	1SNK906304R0000	50	2.90
	5 poles		JB6-5	1SNK906305R0000	50	3.60
	10 poles		JB6-10	1SNK906310R0000	20	7.40
	50 poles		JB6-50	1SNK906350R0000	10	38.10

Main technical data

Material specifications	Insulating material	Polyamide	
	Flammability	V0	
	NF F 16 101	I2F3	
Ambient temperature min/max	Service IEC 60068-2-1	-55 ... +110 °C	-67 ... +230 °F
	Storage	-55 ... +110 °C	-67 ... +230 °F
	Installing	-5 ... +40 °C	+23 ... +104 °F

		IEC	UL - CSA	Ex e
Rated current		41 A	30 A	
Rated voltage	1 - Standard use	1000 V	600 V	Please consult
	2 - Cut extremities	800 V	300 V	our dedicated
	3 - Cut poles	630 V	300 V	certificates
	4 - Alternated poles	400 V	150 V	
	5 - Alternated poles with cut extremities	400 V	150 V	
Impulse withstand voltage		8000 V		
Protection		IP20	NEMA 1	

All the main technical data are indicative "manufacturer" values.

RoHS
RoHS

Mounting instructions

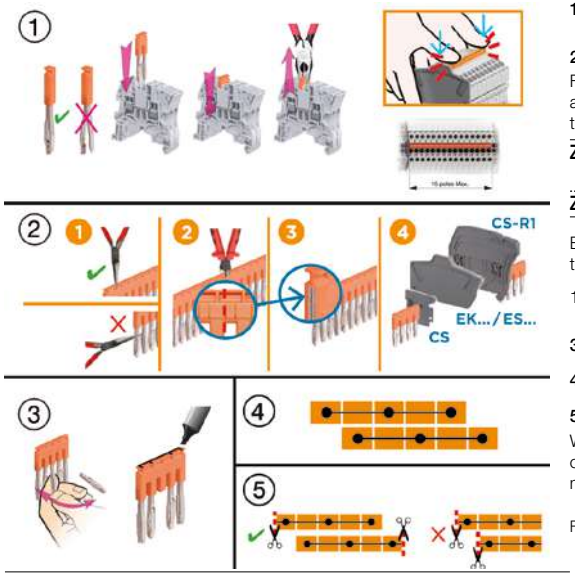

1 - Standard use

2 - Cut extremities

For voltage rating > 50 V and Uimp > 2.5 KV, the below accessories must be installed on the cut side of the jumper to guarantee IP20 and voltage rating:

ZS...	Feed-through	CS circuit separator
	Double deck / triple deck	ES... end section
ZK...	All functions	EK... end section

Ensure a good straight cut by positioning the cutting tool on the vertical snicks of the insulated part of the jumper.

15 poles max. recommended for convenient mounting.

3 - Cut poles

4 - Alternated poles

5 - Alternated poles with cut extremities

When using cut jumpers, cut extremities should be placed oppositely to allow end sections / circuit separators placement at each cut extremities.

For all other applications, please consult us.

1SNK160029S0201

Technical data valid for copper conductors only.

JB8 screwless jumper bars
Common terminal block accessories

JB8

8 mm 0.315 in spacing

Description

Facilitate & secure your jumper bar assembly process:
- Screwless mounting,
- Pre-cut poles for alternated jumpering between terminal blocks,
- Insulated,
- Positive locking,
- Perfectly adapted to low level electrical contact (20mA, 50mV).

Ordering details

Description		Color	Type	Part Number	Pkg qty	Weight (1 pce) g
8 mm 0.315 in spacing	2 poles	Orange	JB8-2	1SNK908302R0000	50	2.70
	3 poles		JB8-3	1SNK908303R0000	50	4.10
	4 poles		JB8-4	1SNK908304R0000	50	5.60
	5 poles		JB8-5	1SNK908305R0000	40	7.00
	10 poles		JB8-10	1SNK908310R0000	20	14.20

Main technical data

Material specifications	Insulating material	Polyamide	
	Flammability	V0	
	NF F 16 101	I2F3	
Ambient temperature min/max	Service IEC 60068-2-1	-55 ... +110 °C	-67 ... +230 °F
	Storage	-55 ... +110 °C	-67 ... +230 °F
	Installing	-5 ... +40 °C	+23 ... +104 °F

		IEC	UL - CSA	Ex e
Rated current		57 A	42 A	
Rated voltage	1 - Standard use	1000 V	600 V	693 V
	2 - Cut extremities	800 V	300 V	440 V
	3 - Cut poles	630 V	300 V	440 V
	4 - Alternated poles	630 V	150 V	352 V
	5 - Alternated poles with cut extremities	630 V	150 V	352 V
Impulse withstand voltage		6000 V		
Protection		IP20	NEMA 1	

All the main technical data are indicative "manufacturer" values.

RoHS
RoHS

Mounting instructions

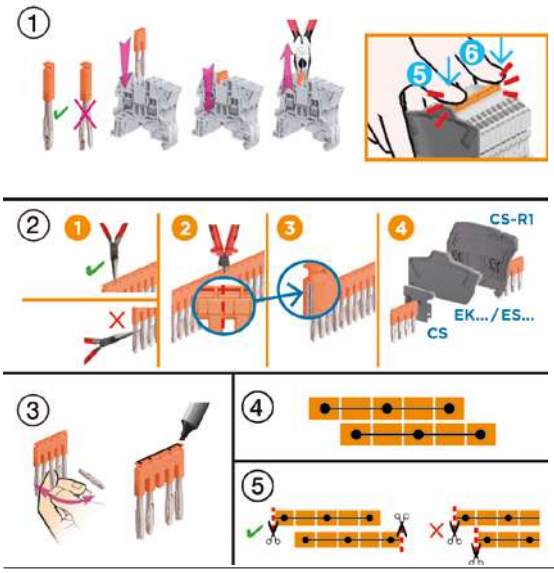

1 - Standard use

2 - Cut extremities

For voltage rating > 50 V and Uimp > 2.5 KV, the below accessories must be installed on the cut side of the jumper to guarantee IP20 and voltage rating:

ZS...	Feed-through	CS circuit separator
	Double deck / triple deck	ES... end section
ZK...	All functions	EK... end section

Ensure a good straight cut by positioning the cutting tool on the vertical snicks of the insulated part of the jumper.

3 - Cut poles

4 - Alternated poles

5 - Alternated poles with cut extremities

When using cut jumpers, cut extremities should be placed oppositely to allow end sections / circuit separators placement at each cut extremities.

For all other applications, please consult us.

1SNK160030S0201

Technical data valid for copper conductors only.

JB10 screwless jumper bars
Common terminal block accessories

JB10

10 mm 0.394 in spacing

Description

Facilitate & secure your jumper bar assembly process:
- Screwless mounting,
- Pre-cut poles for alternated jumpering between terminal blocks,
- Insulated,
- Positive locking,
- Perfectly adapted to low level electrical contact (20mA, 50mV).

Ordering details

Description		Color	Type	Part Number	Pkg qty	Weight (1 pce) g
10 mm 0.394 in spacing	2 poles	Orange	JB10-2	1SNK910302R0000	50	4.60
	3 poles		JB10-3	1SNK910303R0000	50	7.10
	4 poles		JB10-4	1SNK910304R0000	40	9.40
	5 poles		JB10-5	1SNK910305R0000	30	12.00
	10 poles		JB10-10	1SNK910310R0000	20	24.00

Main technical data

Material specifications	Insulating material	Polyamide	
	Flammability	V0	
	NF F 16 101	I2F3	
Ambient temperature min/max	Service IEC 60068-2-1	-55 ... +110 °C	-67 ... +230 °F
	Storage	-55 ... +110 °C	-67 ... +230 °F
	Installing	-5 ... +40 °C	+23 ... +104 °F

		IEC	UL - CSA	Ex e
Rated current		76 A	67 A	
Rated voltage	1 - Standard use	1000 V	600 V	693 V
	2 - Cut extremities	800 V	300 V	440 V
	3 - Cut poles	630 V	300 V	440 V
	4 - Alternated poles	400 V	150 V	275 V
	5 - Alternated poles with cut extremities	250 V	150 V	176 V
Impulse withstand voltage		6000 V		
Protection		IP20	NEMA 1	

All the main technical data are indicative "manufacturer" values.

RoHS
RoHS

Mounting instructions

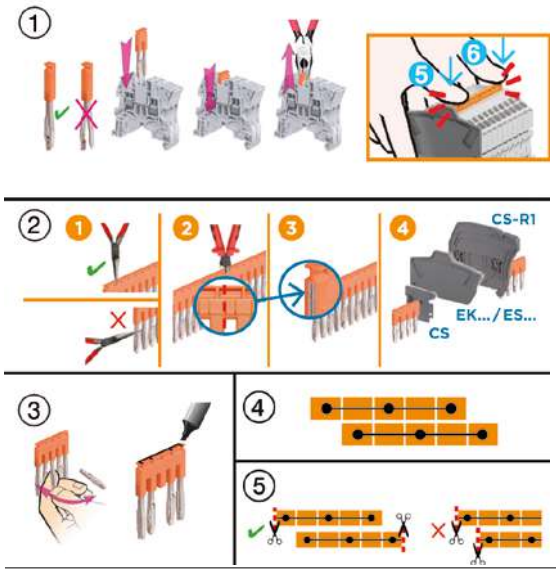

1 - Standard use

2 - Cut extremities

For voltage rating > 50 V and Uimp > 2.5 KV, the below accessories must be installed on the cut side of the jumper to guarantee IP20 and voltage rating:

ZS...	Feed-through	CS circuit separator
	Double deck / triple deck	ES... end section
ZK...	All functions	EK... end section

Ensure a good straight cut by positioning the cutting tool on the vertical snicks of the insulated part of the jumper.

3 - Cut poles

4 - Alternated poles

5 - Alternated poles with cut extremities

When using cut jumpers, cut extremities should be placed oppositely to allow end sections / circuit separators placement at each cut extremities.

For all other applications, please consult us.

1SNK160031S0201

Technical data valid for copper conductors only.

JB12 screwless jumper bars
Common terminal block accessories

JB12

12 mm 0.472 in spacing

Description

Facilitate & secure your jumper bar assembly process:
- Screwless mounting,
- Pre-cut poles for alternated jumpering between terminal blocks,
- Insulated,
- Positive locking,
- Perfectly adapted to low level electrical contact (20mA, 50mV).

Ordering details

Description		Color	Type	Part Number		Pkg qty	Weight (1 pce) g
12 mm 0.472 in spacing	2 poles	Orange	JB12-2	1SNK912302R0000		50	4.90
	3 poles		JB12-3	1SNK912303R0000		50	7.60
	5 poles		JB12-5	1SNK912305R0000		20	12.90

Main technical data

Material specifications	Insulating material	Polyamide	
	Flammability	V0	
	NF F 16 101	I2F2	
Ambient temperature min/max	Service IEC 60068-2-1	-55 ... +110 °C	-67 ... +230 °F
	Storage	-55 ... +110 °C	-67 ... +230 °F
	Installing	-5 ... +40 °C	+23 ... +104 °F

		IEC	UL - CSA	Ex e
Rated current		76 A	67 A	
Rated voltage	1 - Standard use	1000 V	600 V	693 V
	2 - Cut extremities	800 V	300 V	440 V
	3 - Cut poles	630 V	300 V	440 V
	4 - Alternated poles	320 V	150 V	220 V
	5 - Alternated poles with cut extremities	250 V	150 V	176 V
Impulse withstand voltage		6000 V		
Protection		IP20	NEMA 1	

All the main technical data are indicative "manufacturer" values.

RoHS
RoHS

Mounting instructions

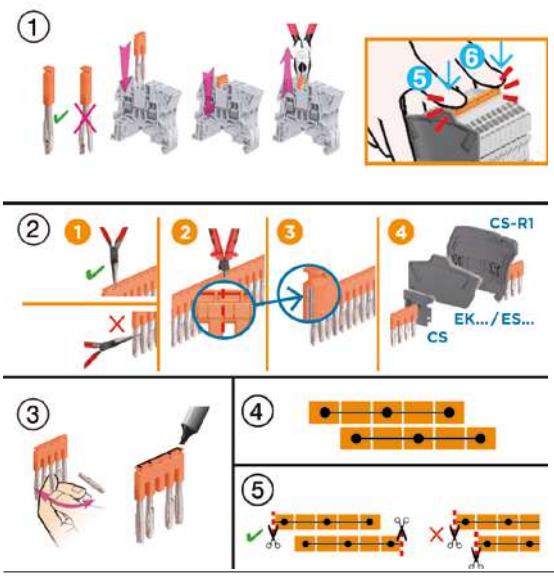

1 - Standard use

2 - Cut extremities

For voltage rating > 50 V and Uimp > 2.5 KV, the below accessories must be installed on the cut side of the jumper to guarantee IP20 and voltage rating:

ZS...	Feed-through	CS circuit separator
	Double deck / triple deck	ES... end section
ZK...	All functions	EK... end section

Ensure a good straight cut by positioning the cutting tool on the vertical snicks of the insulated part of the jumper.

3 - Cut poles

4 - Alternated poles

5 - Alternated poles with cut extremities

When using cut jumpers, cut extremities should be placed oppositely to allow end sections / circuit separators placement at each cut extremities.

For all other applications, please consult us.

1SNK160071S0201

Technical data valid for copper conductors only.

JB85-3 cross spacing jumpers
Common terminal block accessories

JB85

8 mm 0.315 in spacing

Description

- Allows power distribution between terminal blocks with different spacing,
- JB5-3, JB6-3 and JB8-3 can be used as cross spacing jumpers (see selection table on mounting instructions below).

Ordering details

Description		Color	Type	Part Number		Pkg qty	Weight (1 pce) g
Cross spacing jumpers	3 poles	Orange	JB85-3	1SNK900603R0000		10	2.80

Main technical data

Material specifications	Insulating material	Polyamide	
	Flammability	V0	
	NF F 16 101	I2F3	
Ambient temperature min/max	Service IEC 60068-2-1	-55 ... +110 °C	-67 ... +230 °F
	Storage	-55 ... +110 °C	-67 ... +230 °F
	Installing	-5 ... +40 °C	+23 ... +104 °F

		IEC	UL - CSA	Ex e
Rated current		32 A	30 A	
Rated voltage	Standard use	1000 V	600 V	Please consult
	Cut extremities	800 V	300 V	our dedicated
	Cut poles	630 V	300 V	certificates
Impulse withstand voltage		8000 V		
Protection		IP20	NEMA 1	

All the main technical data provided are "manufacturer" values

RoHS
RoHS

Mounting instructions

Cross spacing jumper selection between A and B terminal blocks with different spacing.

A \ B	5.2 mm	6 mm	8 mm
6 mm	JB5.3	-	-
8 mm	JB85.3	JB85.3	-
10 mm	JB85.3	JB85.3	JB8.3
12 mm	JB85.3	JB6.3	-

Yellow cell: for ZS and ZK terminal blocks

Blue cell: for ZS terminal blocks only

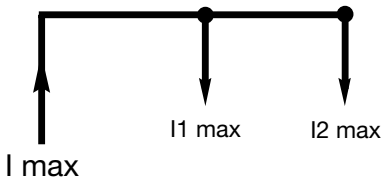

I1 max + I2 max ≤ I max

I max
I1 max ≤ I rated terminal block
I2 max

Technical data valid for copper conductors only.

TP

7.6 mm 0.299 in spacing

Mounting instructions

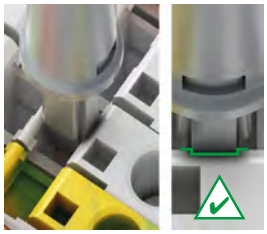

TP2 test adapters

Description

- Insulated test adapter that enables individual voltage control,
- Direct plug-in solution into the jumpers channels,
- Compatible with standard isolated or non isolated test plugs DIA 2 mm 0.079 in and 2.3 mm 0.090 in,
- Withstand more than 10000 operations according to TE Connectivity test standards.

Ordering details

Description	Color	Type	Part Number	Pkg qty	Weight (1 pce) g
For test plugs DIA 2 mm 0.079 in	Dark grey	TP2	1SNK900203R0000	20	1.70

Main technical data

Material specifications	Insulating material	Polyamide	
	Flammability	V0	
	NF F 16 101	I2F2	
Ambient temperature min/max	Service IEC 60068-2-1	-55 ... +110 °C	-67 ... +230 °F
	Storage	-55 ... +110 °C	-67 ... +230 °F
	Installing	-5 ... +40 °C	+23 ... +104 °F

		IEC	UL - CSA	Ex e
Rated current		10 A		
Rated voltage	Standard use	1000 V	600 V	Not authorized
Impulse withstand voltage		8000 V		
Protection		IP20	NEMA 1	

All the main technical data provided are "manufacturer" values

RoHS
RoHS

TP

7.6 mm 0.299 in spacing

Mounting instructions

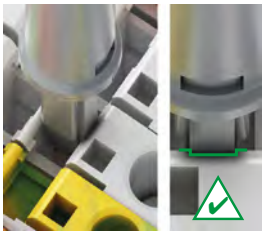

TP4 test adapters

Description

- Isolated test adapter that enables individual voltage control,
- Direct plug-in solution into the jumpers channels,
- Compatible with standard insulated or non isolated test plugs DIA 4 mm 0.157 in,
- Withstand more than 10000 operations according to TE Connectivity test standards.

Ordering details

Description	Color	Type	Part Number	Pkg qty	Weight (1 pce) g
For test plugs DIA 4 mm 0.157 in	Dark grey	TP4	1SNK900205R0000	20	2.40

Main technical data

Material specifications	Insulating material	Polyamide	
	Flammability	V0	
	NF F 16 101	I2F2	
Ambient temperature min/max	Service IEC 60068-2-1	-55 ... +110 °C	-67 ... +230 °F
	Storage	-55 ... +110 °C	-67 ... +230 °F
	Installing	-5 ... +40 °C	+23 ... +104 °F

		IEC	UL - CSA	Ex e
Rated current		16 A		
Rated voltage	Standard use	1000 V	600 V	Not authorized
Impulse withstand voltage		8000 V		
Protection		IP20	NEMA 1	

All the main technical data provided are "manufacturer" values

RoHS
RoHS

1SNK160036S0201

Technical data valid for copper conductors only.

TC5 test connectors
Common terminal block accessories

5.2 mm 0.205 in spacing

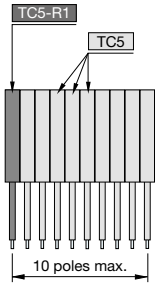

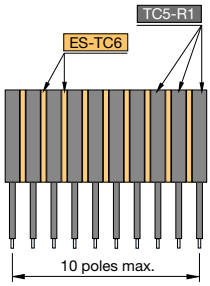

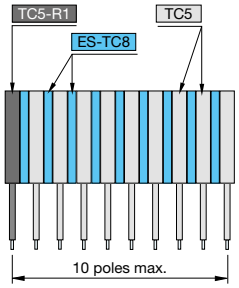

PT-3

Description

Ease the testing of terminal block assemblies:

- Make your own test connector assembly with our modular solution mixing various spacings,
- Direct plug-in solution into the jumpers channels,
- Withstand more than 10000 operations according to TE Connectivity test standards.

Main technical data

Connecting capacity		IEC	UL - CSA
1 conductor per clamp	Rigid - Solid / Stranded	0.2 ... 1.5 mm²	
	Flexible without ferrule	0.22 ... 1.5 mm²	
	Flexible with non insulated ferrule		
	Flexible with insulated ferrule	0.22 ... 1.5 mm²	
	Gauge	A1-B1	
2 conductors per clamp	Rigid - Solid / Stranded	0.2 ... 0.75 mm²	
	Flexible without ferrule	0.22 ... 0.75 mm²	
	Flexible with twin ferrule	0.22 ... 0.75 mm²	
Rated current / Rated cross section		16 A / 1.5 mm²	
Rated short-time withstand current (1s)		180 A	
Rated voltage		1000 V	
Impulse withstand voltage		8000 V	
Protection		IP20	NEMA 1

Mounting instructions

Rail		
Wire stripping length		8 mm 0.314 in
Tool		Flat screwdriver Ø 2.5 mm Ø 0.098 in
Torque		0.5 Nm ± 0.1 3.43 lb.in ± 0.885

The connecting capacity data for one Rigid - Solid/Stranded, or one Flexible conductor (when applicable) is a mandatory information required by IEC, UL and CSA standards (Copper conductors). All other data are provided as supplementary information only. For more details, please consult our CB, UL or CSA certificates and technical datasheet available on http://www.TE.com

Material specifications	Insulating material	Polyamide	
	Flammability	V0	
	NF F 16 101	I2F2	
Ambient temperature min/max	Service IEC 60068-2-1	-55 ... +110 °C	-67 ... +230 °F
	Storage	-55 ... +110 °C	-67 ... +230 °F
	Installing	-5 ... +40 °C	+23 ... +104 °F

All the main technical data provided are "manufacturer" values

RoHS
RoHS

Ordering details

Test connectors for 5.2 mm 0.205 in spacing terminal blocks

Description		Color	Type	Part Number		Pkg qty	Weight (1 pce) g
Test connectors	5.2 mm 0.205 in spacing	Dark grey	TC5	1SNK900200R0000		10	5.20
	End module, 5.2 mm 0.205 in		TC5-R1	1SNK900201R0000		10	5.20

Ordering details

Test connectors for 6 mm 0.236 in spacing terminal blocks

Description		Color	Type	Part Number		Pkg qty	Weight (1 pce) g
Test connectors	End module, 5.2 mm 0.205 in	Dark grey	TC5-R1	1SNK900201R0000		10	5.20
Spacers	0.8 mm 0.031 in spacing		ES-TC6	1SNK900105R0000		10	0.80

Ordering details

Test connectors for 8 mm 0.315 in spacing terminal blocks

Description		Color	Type	Part Number		Pkg qty	Weight (1 pce) g
Test connectors	5.2 mm 0.205 in spacing	Dark grey	TC5	1SNK900200R0000		10	5.20
	End module, 5.2 mm 0.205 in		TC5-R1	1SNK900201R0000		10	5.20
Spacers	2.8 mm 0.110 in spacing		ES-TC8	1SNK900104R0000		10	1.40

Accessories

Description		Color	Type	Part Number		Pkg qty	Weight (1 pce) g
Cable clamps	Fit on two C2.5-ZDP plugs and on TC5 test connectors	Dark grey	PT-3	1SNK900625R0000		20	1.00
Terminal block markers	Blank marker	White	MG-CPM 13 41790	1SNB041790R0512		1960	0.23
	Blank card		MC512	1SNK140000R0000		22	9.00
			MC512PA	1SNK149999R0000		20	10.00
	Universal wire markers holder	Grey	UMH	1SNK900611R0000		10	0.20

Technical data valid for copper conductors only.

1SNK160042S0201

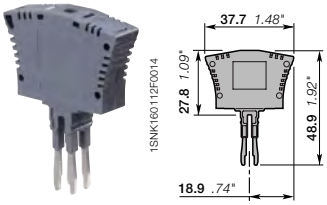

PG5

9.95 mm 0.392 in spacing

Mounting instructions

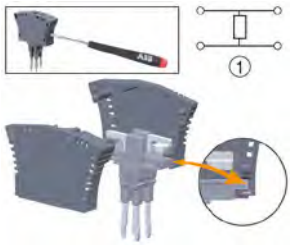

- Open the PG5-R2 with a flat screw-driver DIA . 3.5 mm 0.138 in,
- Use a soldering iron to fix your component,
- Close the PG5-R2,
- Plug-in in the terminal blocks jumper channels.

PG5-R2 component plugs

Description

- Component holder compatible with 5.2 mm 0.205 in spacing ZS4 feed-through terminal blocks,
- Fit components 16 x 16 x 8.5 mm 0.630 x 0.630 x 0.335 in (not supplied with plug) such as resistors, diodes, varistance,
- Direct plug-in into the terminal blocks jumper channels,
- Maximum dissipated power: 2 W.

Ordering details

Description	Color	Type	Part Number	Pkg qty	Weight (1 pce) g
Components insertion between 2 blocks	Dark grey	PG5-R2	1SNK900403R0000	20	8.00

Main technical data

Material specifications	Insulating material	Polyamide	
	Flammability	V0	
	NF F 16 101	I2F2	
Ambient temperature min/max	Service IEC 60068-2-1	-55 ... +110 °C	-67 ... +230 °F
	Storage	-55 ... +110 °C	-67 ... +230 °F
	Installing	-5 ... +40 °C	+23 ... +104 °F

	IEC	UL - CSA
Rated current		
Rated voltage	250 V	
Impulse withstand voltage	4000 V	
Protection	IP20	NEMA 1

All the main technical data provided are "manufacturer" values

RoHS
RoHS

Accessories

Description		Color	Type	Part Number	Pkg qty	Weight (1 pce) g
Terminal block markers		White	MG-CPM 13 41790	1SNB041790R0512	1960	0.23
Blank card	In polycarbonate		MC512	1SNK140000R0000	22	9.00
	Blank card		MC512PA	1SNK149999R0000	20	10.00
Universal wire markers holder	5.2 mm 0.205 in spacing	Grey	UMH	1SNK900611R0000	10	0.20

Technical data valid for copper conductors only.

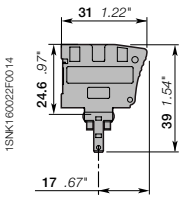

PG5

5.2 mm 0.205 in spacing

Mounting instructions

– Direct plug-in in disconnect with plug terminal block

PG5 component plugs

Description

– Ease the components installation (components not supplied with plug) with our quick plug-in mounting system which avoids soldering process,
– Accept 8.8 x 3.2 mm 0.346 x 0.125 in components such as resistors, diodes or subminiature fuses (fully encapsulated),
– Maximum dissipated power: 1 W.

Ordering details

Description	Color	Type	Part Number	Pkg qty	Weight (1 pce) g
Components in series with circuit	Dark grey	PG5	1SNK900401R0000	20	3.50

Main technical data

Material specifications	Insulating material	Polyamide	
	Flammability	V0	
	NF F 16 101	I2F2	
Ambient temperature min/max	Service IEC 60068-2-1	-55 ... +110 °C	-67 ... +230 °F
	Storage	-55 ... +110 °C	-67 ... +230 °F
	Installing	-5 ... +40 °C	+23 ... +104 °F

	IEC	UL - CSA
Rated current		
Rated voltage	400 V	150 V
Impulse withstand voltage	6000 V	
Protection	IP20	NEMA 1

All the main technical data provided are "manufacturer" values

RoHS
RoHS

Accessories

Description		Color	Type	Part Number	Pkg qty	Weight (1 pce) g
Terminal block markers		White	MG-CPM 13 41790	1SNB041790R0512	1960	0.23
Blank card	In polycarbonate		MC512	1SNK140000R0000	22	9.00
	Blank card		MC512PA	1SNK149999R0000	20	10.00
Universal wire markers holder	5.2 mm 0.205 in spacing	Grey	UMH	1SNK900611R0000	10	0.20

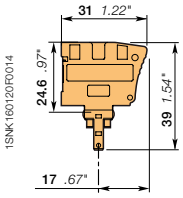

PG5

5.2 mm 0.205 in spacing

Mounting instructions

– PG5-R1 totally inserted: closed circuit,
– PG5-R1 inserted in central position: open circuit, plug secured in isolated central position

PG5-R1 disconnect plugs

Description

Allow disconnect function when associated with the disconnect with plug terminal blocks.

Ordering details

Description	Color	Type	Part Number	Pkg qty	Weight (1 pce) g
Equipped with linking bar	Orange	PG5-R1	1SNK900402R0000	20	3.50

Main technical data

Material specifications	Insulating material	Polyamide	
	Flammability	V0	
	NF F 16 101	I2F3	
Ambient temperature min/max	Service IEC 60068-2-1	-55 ... +110 °C	-67 ... +230 °F
	Storage	-55 ... +110 °C	-67 ... +230 °F
	Installing	-5 ... +40 °C	+23 ... +104 °F

	IEC	UL - CSA
Rated current	18 A	20 A
Rated voltage	400 V	150 V
Impulse withstand voltage	6000 V	
Protection	IP20	NEMA 1

All the main technical data provided are "manufacturer" values

RoHS
RoHS

Accessories

Description		Color	Type	Part Number	Pkg qty	Weight (1 pce) g
Terminal block markers		White	MG-CPM 13 41790	1SNB041790R0512	1960	0.23
Blank card	In polycarbonate		MC512	1SNK140000R0000	22	9.00
	Blank card		MC512PA	1SNK149999R0000	20	10.00
Universal wire markers holder	5.2 mm 0.205 in spacing	Grey	UMH	1SNK900611R0000	10	0.20

Technical data valid for copper conductors only.

1SNK160242F0014

TO

TO screwdrivers

Description

Flat head screwdriver

Ordering details

Description	Color	Type	Part Number		Pkg qty	Weight (1 pce) g
Insulated screwdriver 1000V IEC dimensions 3.5 x 100 mm 0.138 x 3.94 in		TO3.5-100-INS	1SNK900644R0000		1	37.00
screwdriver 3.5 x 50 mm 0.138 x 1.97 in		TO3.5-50	1SNK900640R0000		12	22.00
screwdriver 3.5 x 50 mm 0.138 x 1.97 in Angled 60°		TO3.5-50-A	1SNK900659R0000		12	21.6
screwdriver 4 x 100 mm 0.157 x 3.94 in		TO4-100	1SNK900641R0000		1	42.00
screwdriver 5.5 x 125 mm 0.216 x 4.92 in		TO5.5-125	1SNK900642R0000		1	75.50
screwdriver 6.5 x 150 mm 0.256 x 5.90 in		TO6.5-150	1SNK900643R0000		1	121.00

1SNK160127F0014

PS

PS crimping tools

Description

- Crimp flexible conductors equipped with ferrules from 0.08 to 10 mm² 28 AWG to 7 AWG,
- Semi-automatic crimping tool.

Ordering details

Description	Color	Type	Part Number		Pkg qty	Weight (1 pce) g
180 mm 7.09 in length		PS-3	1SNK900650R0000		1	380.00

Technical data valid for copper conductors only.

1SNK160233V0014

EK2.5

EK2.5 end sections

Description

- Unique dark grey color that fits all terminal blocks colours and ease the identification of circuits within your terminal block assemblies,
- Compatible with ZK2.5, ZK2.5-PE, ZK4, ZK4-PE, ZK6 and ZK6-PE PI-Spring screwless terminal blocks.

Ordering details

Description	Color	Type	Part Number		Pkg qty	Weight (1 pce) g
2 mm 0.079 in spacing	Dark grey	EK2.5	1SNK705910R0000		20	1.80

1SNK160234V0014

EK2.5-3P

EK2.5-3P end sections

Description

- Unique dark grey color that fits all terminal blocks colours and ease the identification of circuits within your terminal block assemblies,
- Compatible with ZK2.5-3P, ZK2.5-PE-3P, ZK4-3P, ZK4-PE-3P, ZK2.5-S..., ZK2.5-SP and ZK2.5-SF... PI-Spring screwless terminal blocks.

Ordering details

Description	Color	Type	Part Number		Pkg qty	Weight (1 pce) g
2 mm 0.079 in spacing	Dark grey	EK2.5-3P	1SNK705911R0000		20	2.40

1SNK160235V0014

EK2.5-4P

EK2.5-4P end sections

Description

- Unique dark grey color that fits all terminal blocks colours and ease the identification of circuits within your terminal block assemblies,
- Compatible with ZK2.5-4P, ZK2.5-PE-4P, ZK4-4P and ZK4-PE-4P PI-Spring screwless terminal blocks.

Ordering details

Description	Color	Type	Part Number		Pkg qty	Weight (1 pce) g
2 mm 0.079 in spacing	Dark grey	EK2.5-4P	1SNK705912R0000		20	2.70

Main technical data

Material specifications	Insulating material	Polyamide	
	Flammability	V0	
	NF F 16 101	I2F2	
Ambient temperature min/max	Service IEC 60068-2-1	-55 ... +110 °C	-67 ... +230 °F
	Storage	-55 ... +110 °C	-67 ... +230 °F
	Installing	-5 ... +40 °C	+23 ... +104 °F

All the main technical data provided are "manufacturer" values.

RoHS
RoHS

Technical data valid for copper conductors only.

1SNK160064S0201

1SNK160339V0014

EK2.5-S-4P

EK2.5-S-4P end sections

Description

– Unique dark grey color that fits all terminal blocks colours and ease the identification of circuits within your terminal block assemblies,
– Compatible with ZK2.5-S-4P, ZK2.5-SP-4P, ZK2.5-CH-4P... PI-Spring screwless terminal blocks.

Ordering details

Description	Color	Type	Part Number		Pkg qty	Weight (1 pce) g
2 mm 0.079 in spacing	Dark grey	EK2.5-S-4P	1SNK705913R0000		20	2.94

1SNK160237V0014

EK2.5-D2

EK2.5-D2 end sections

Description

– Compatible with ZK2.5-D2, ZK2.5-D2-PE, ZK2.5-D1 and ZK2.5-D1-PE PI-Spring screwless terminal blocks.

Ordering details

Description	Color	Type	Part Number		Pkg qty	Weight (1 pce) g
2 mm 0.079 in spacing	Dark grey	EK2.5-D2	1SNK705960R0000		20	3.40

1SNK160346V0014

EK2.5-T3

EK2.5-T3 end sections

Description

– Compatible with ZK2.5-T3, ZK2.5-T1, ZK2.5-T1-PE, ZK2.5-L-L-PE and ZK2.5-L-N-PE PI-Spring screwless terminal blocks.

Ordering details

Description	Color	Type	Part Number		Pkg qty	Weight (1 pce) g
0.8 mm 0.031 in spacing	Dark grey	EK2.5-T3	1SNK705961R0000		20	4.76

Main technical data

Material specifications	Insulating material	Polyamide	
	Flammability	V0	
	NF F 16 101	I2F2	
Ambient temperature min/max	Service IEC 60068-2-1	-55 ... +110 °C	-67 ... +230 °F
	Storage	-55 ... +110 °C	-67 ... +230 °F
	Installing	-5 ... +40 °C	+23 ... +104 °F

All the main technical data provided are "manufacturer" values.

RoHS
RoHS

Technical data valid for copper conductors only.

1SNK160065S0201

EK6-3P

EK6-3P end sections

Description

– Compatible with ZK6-3P and ZK6-PE-3P PI-Spring screwless terminal blocks.

Ordering details

Description	Color	Type	Part Number		Pkg qty	Weight (1 pce) g
2 mm 0.079 in spacing	Dark grey	EK6-3P	1SNK708911R0000		20	2.80

EK10

EK10 end sections

Description

– Compatible with ZK10, ZK10-PE, ZK16 and ZK16-PE PI-Spring screwless terminal blocks.

Ordering details

Description	Color	Type	Part Number		Pkg qty	Weight (1 pce) g
2 mm 0.079 in spacing	Dark grey	EK10	1SNK710910R0000		20	3.30

EK10-3P

EK10-3P end sections

Description

– Unique dark grey color that fits all terminal blocks colours and ease the identification of circuits within your terminal block assemblies,
– Compatible with ZK10-3P, ZK10-PE-3P, ZK16-3P, ZK16-PE-3P... PI-Spring screwless terminal blocks.

Ordering details

Description	Color	Type	Part Number		Pkg qty	Weight (1 pce) g
2 mm 0.079 in spacing	Dark grey	EK10-3P	1SNK710911R0000		20	4.5

Main technical data

Material specifications	Insulating material	Polyamide	
	Flammability	V0	
	NF F 16 101	I2F2	
Ambient temperature min/max	Service IEC 60068-2-1	-55 ... +110 °C	-67 ... +230 °F
	Storage	-55 ... +110 °C	-67 ... +230 °F
	Installing	-5 ... +40 °C	+23 ... +104 °F

All the main technical data provided are "manufacturer" values.

RoHS
RoHS

Technical data valid for copper conductors only.

1SNK160240V0014

CS-R2

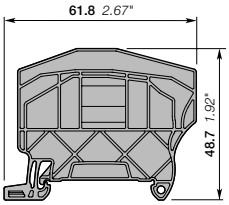

3 mm 0.118 in spacing

CS-R2 circuit separators

Description

- Compact circuits separator solution (only 3mm spacing) which provides a convenient visual identification of the several circuits within terminal assemblies,
- Unique top marking possibility that can replace the conventional solution of "end stop with label holder" for demanding applications with high space constraints, - Compatible with all PI-spring feed-through and ground terminal blocks up to 8 mm spacing,
- Mounting on DIN3-TH35 rail.

Ordering details

Description	Color	Type	Part Number		Pkg qty	Weight (1 pce) g
3 mm 0.118 in spacing	Dark grey	CS-R2	1SNK900106R0000		20	3.80

Main technical data

Material specifications	Insulating material	Polyamide	
	Flammability	V0	
	NF F 16 101	I2F2	
Ambient temperature min/max	Service IEC 60068-2-1	-55 ... +110 °C	-67 ... +230 °F
	Storage	-55 ... +110 °C	-67 ... +230 °F
	Installing	-5 ... +40 °C	+23 ... +104 °F

All the main technical data provided are "manufacturer" values

RoHS
RoHS

Accessories

Description		Color	Type	Part Number		Pkg qty	Weight (1 pce) g
Terminal block markers		White	MG-CPM 13 41791	1SNB041791R0612		1680	0.27
Labels		Yellow	MG-VYT 46415	1SNB046415R0615		5250	0.04
		White	MG-VYT 46915	1SNB046915R0615		5250	0.05
Blank card	In polycarbonate	White	MC612	1SNK150000R0000		22	10.00
	Blank card		MC612PA	1SNK159999R0000		20	11.00
Universal wire markers holder	5.2 mm 0.205 in spacing	Grey	UMH	1SNK900611R0000		10	0.20

Technical data valid for copper conductors only.

1SNK160072S0201

CS-R3

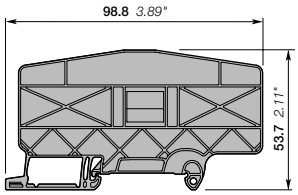

3 mm 0.118 in spacing

CS-R3 circuit separators

Description

- Compact circuits separator solution (only 3mm spacing) which provides a convenient visual identification of the several circuits within terminal assemblies,
- Unique top marking possibility that can replace the conventional solution of "end stop with label holder" for demanding applications with high space constraints,
- Compatible with all single deck PI-spring terminal blocks and ZS10-ST...terminal blocks ,
- Mounting on DIN3-TH35 rail.

Ordering details

Description	Color	Type	Part Number	Pkg qty	Weight (1 pce) g
3 mm 0.118 in spacing	Dark grey	CS-R3	1SNK900107R0000	20	6.40

Main technical data

Material specifications	Insulating material	Polyamide	
	Flammability	V0	
	NF F 16 101	I2F2	
Ambient temperature min/max	Service IEC 60068-2-1	-55 ... +110 °C	-67 ... +230 °F
	Storage	-55 ... +110 °C	-67 ... +230 °F
	Installing	-5 ... +40 °C	+23 ... +104 °F

All the main technical data provided are "manufacturer" values

RoHS
RoHS

Accessories

Description		Color	Type	Part Number	Pkg qty	Weight (1 pce) g
Terminal block markers		White	MG-CPM 13 41790	1SNB041790R0512	1960	0.23
			MG-CPM 13 41791	1SNB041791R0612	1680	0.27
Labels		Yellow	MG-VYT 46415	1SNB046415R0615	5250	0.04
		White	MG-VYT 46915	1SNB046915R0615	5250	0.05
Blank card	In polycarbonate	White	MC512	1SNK140000R0000	22	9.00
	Blank card		MC512PA	1SNK149999R0000	20	10.00
	In polycarbonate		MC612	1SNK150000R0000	22	10.00
	Blank card		MC612PA	1SNK159999R0000	20	11.00
Universal wire markers holder	5.2 mm 0.205 in spacing	Grey	UMH	1SNK900611R0000	10	0.20

Technical data valid for copper conductors only.

SHBP/SHB

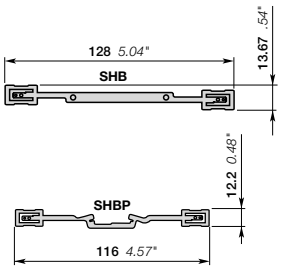

SHBP/SHB shield connectors for PI-Spring terminal blocks

Description

- Ensure the continuity of your shield connection,
- Various connection solutions available: RILS cable ties, soldering, quick-connect.

Ordering details

Description	Color	Type	Part Number		Pkg qty	Weight (1 pce) g
Compatible with ZK2.5 and ZK2.5-S terminal blocks		SHBP	1SNK900601R0000		20	4.10
Compatible with ZS and ZK double deck terminal blocks		SHB	1SNK900602R0000		20	4.90

Main technical data

Material specifications	Insulating material					
	Flammability					
	NF F 16 101					
Ambient temperature min/max	Service IEC 60068-2-1	-55 ... +110 °C	-67 ... +230 °F			
	Storage	-55 ... +110 °C	-67 ... +230 °F			
	Installing	-5 ... +40 °C	+23 ... +104 °F			

SHBP	IEC	UL - CSA	Ex e
Rated voltage	100 V		50 V

All the main technical data provided are "manufacturer" values

RoHS
RoHS

Accessories for screw clamp and PI-Spring terminal blocks

Description		Color	Type	Part Number		Pkg qty	Weight (1 pce) g
Cable ties	For SNK shield connector		RILS	1SNK900627R0000		10	0.30

Mounting instructions

- SHBS is directly fixed on the terminal block,
- SHB is fixed on the ES4-D2 end section,
- SHBP is directly fixed on the terminal block,
- Connect the cable shielding on the shielding connector with:
- RILS cable ties,
- quick-connect (the shield connector needs to be prepared),
- soldering iron.

Technical data valid for copper conductors only.

1SNK161013F0014

ES4

ES4 end sections

Description

- Unique dark grey color that fits all terminal blocks colours and ease the identification of circuits within your terminal block assemblies,
- Compatible with feed-through, ground and disconnect screw clamp terminal blocks.

Ordering details

Description	Color	Type	Part Number		Pkg qty	Weight (1 pce) g
2.2 mm 0.087 in spacing	Dark grey	ES4	1SNK505910R0000		20	2.20

1SNK160229V0014

ES6-3S

ES6-3S end sections

Description

- Compatible with ZS6-3S and ZS6-3S-PE terminal blocks.

Ordering details

Description	Color	Type	Part Number		Pkg qty	Weight (1 pce) g
2.2 mm 0.087 in spacing	Dark grey	ES6-3S	1SNK505912R0000		20	2.50

1SNK160230V0014

ES6-4S

ES6-4S end sections

Description

- Compatible with ZS6-4S, ZS6-4S-PE, ZS6-S-4S-T2 and ZS4-PE-R2 terminal blocks.

Ordering details

Description	Color	Type	Part Number		Pkg qty	Weight (1 pce) g
2.2 mm 0.087 in spacing	Dark grey	ES6-4S	1SNK505911R0000		20	3.10

1SNK161012F0014

ES4-D2

ES4-D2 end sections

Description

- Unique dark grey color that fits all terminal blocks colours and ease the identification of circuits within your terminal block assemblies,
- Compatible with double deck screw clamp terminal blocks

Ordering details

Description	Color	Type	Part Number		Pkg qty	Weight (1 pce) g
2.55 mm 0.100 in spacing	Dark grey	ES4-D2	1SNK505960R0000		20	4.10

Main technical data

Material specifications	Insulating material	Polyamide	
	Flammability	V0	
	NF F 16 101	I2F2	
Ambient temperature min/max	Service IEC 60068-2-1	-55 ... +110 °C	-67 ... +230 °F
	Storage	-55 ... +110 °C	-67 ... +230 °F
	Installing	-5 ... +40 °C	+23 ... +104 °F

All the main technical data provided are "manufacturer" values.

RoHS
RoHS

Technical data valid for copper conductors only.

1SNK160061S0201

9

ES4-T3

ES4-T3 end sections

Description

– Compatible with ZS4-T3 terminal block.

Ordering details

Description	Color	Type	Part Number		Pkg qty	Weight (1 pce) g
0.8 mm 0.031 in spacing	Dark grey	ES4-T3	1SNK505961R0000		20	4.20

ES4-SF

ES4-SF end sections

Description

– Compatible with fuse ZS4-SF1... and disconnect screw clamp terminal blocks ZS4-S-R3.

Ordering details

Description	Color	Type	Part Number		Pkg qty	Weight (1 pce) g
1.5 mm 0.059 in spacing	Dark grey	ES4-SF	1SNK508960R0000		20	1.80

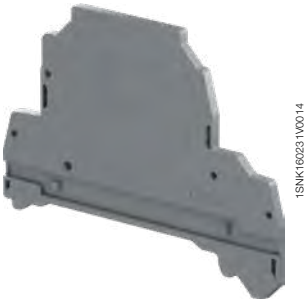

ES4-D2-SF1

ES4-D2-SF1 end sections

Description

– Compatible with ZS4-D2-SF1 ... terminal blocks.

Ordering details

Description	Color	Type	Part Number		Pkg qty	Weight (1 pce) g
2.5 mm 0.098 in spacing	Dark grey	ES4-D2-SF1	1SNK508911R0000		20	5.00

ES10-ST

ES10-ST end sections

Description

– Unique dark grey color that fits all test disconnect terminal blocks ZS10-ST... and ease the identification of circuits within your terminal block assemblies,
– Also compatible with ZS10-R1 and ZS10-PE-R1.

Ordering details

Description	Color	Type	Part Number		Pkg qty	Weight (1 pce) g
2 mm 0.079 in spacing	Dark grey	ES10-ST	1SNK508910R0000		20	3.5

Accessories

Description		Color	Type	Part Number		Pkg qty	Weight (1 pce) g
Circuit separators	0 mm 0 in spacing	Dark grey	CS	1SNK900101R0000		20	0.20

Main technical data

Material specifications	Insulating material	Polyamide	
	Flammability	V0	
	NF F 16 101	I2F2	
Ambient temperature min/max	Service IEC 60068-2-1	-55 ... +110 °C	-67 ... +230 °F
	Storage	-55 ... +110 °C	-67 ... +230 °F
	Installing	-5 ... +40 °C	+23 ... +104 °F

All the main technical data provided are "manufacturer" values.

RoHS
RoHS

Technical data valid for copper conductors only.

1SNK160062S0201

JB8

8 mm 0.315 in spacing

Mounting instructions

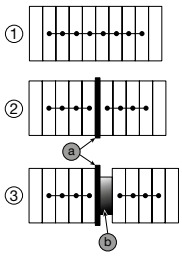

1 - Rated voltage: 160 V (IEC) / Not authorized (UL)
2 - Rated voltage: 320 V (IEC) / Not authorized (UL)
3 - Rated voltage: 1000 V (IEC) / 300 V (UL)
a - End section ES10-ST
b - End stop BAZ1

JB8 jumper bars

Description

Insulated jumper bar with screw mounting.

Ordering details

Description		Color	Type	Part Number		Pkg qty	Weight (1 pce) g
8 mm 0.315 in spacing	2 poles	Orange	JB8-2-R1	1SNK908902R0000		10	7.6
	3 poles		JB8-3-R1	1SNK908903R0000		10	11.6
	4 poles		JB8-4-R1	1SNK908904R0000		10	15.5
	5 poles		JB8-5-R1	1SNK908905R0000		10	19.4
	10 poles		JB8-10-R1	1SNK908910R0000		10	39.00

Main technical data

Material specifications	Insulating material	Polyamide		Rail		
	Flammability	V0				
	NF F 16 101	I2F3		Tool		Flat screwdriver Ø 3.5 mm Ø 0.138 in
Ambient temperature min/max	Service IEC 60068-2-1	-55 ... +110 °C	-67 ... +230 °F			
	Storage	-55 ... +110 °C	-67 ... +230 °F			
	Installing	-5 ... +40 °C	+23 ... +104 °F	Torque		0.7 Nm ± 0.1 6.2 lb.in ± 0.88

		IEC	UL - CSA	Ex e
Rated current		50 A	51 A	
Rated voltage	Standard use	160 V		
	Alternated poles			Not authorized
Impulse withstand voltage				
Protection		IP20	NEMA 1	

All the main technical data provided are "manufacturer" values

RoHS
RoHS

Technical data valid for copper conductors only.

JB16

16 mm 0.630 in spacing

Mounting instructions

- With flat pliers, cut out the partitions on the terminal block insulating body. Be careful to not cut out the jumpered terminal blocks partitions at both ends of the assembly in order to maintain the IP20, Nema1 protection and insulation,
- Install the jumper bar with the recommended tool and torque.

JB16 jumper bars

Description

Insulated jumper bar with screw mounting.

Ordering details

Description		Color	Type	Part Number		Pkg qty	Weight (1 pce) g
16 mm 0.630 in spacing	2 poles	Orange	JB16-2	1SNK916302R0000		10	10.00
	3 poles		JB16-3	1SNK916303R0000		10	16.00
	4 poles		JB16-4	1SNK916304R0000		10	22.00
	5 poles		JB16-5	1SNK916305R0000		10	28.00
	10 poles		JB16-10	1SNK916310R0000		10	56.60

Main technical data

Material specifications	Insulating material	Polyamide		Rail		
	Flammability	V0				
	NF F 16 101	I2F3		Tool		Flat screwdriver Ø 5.5 mm Ø 0.217 in
Ambient temperature min/max	Service IEC 60068-2-1	-55 ... +110 °C	-67 ... +230 °F			
	Storage	-55 ... +110 °C	-67 ... +230 °F			
	Installing	-5 ... +40 °C	+23 ... +104 °F	Torque		1.2 Nm ± 0.1 10.6 lb.in ± 0.885

		IEC	UL - CSA	Ex e
Rated current		125 A	150 A	
Rated voltage	Standard use	1000 V	600 V	
	Alternated poles			Not authorized
Impulse withstand voltage		8000 V		
Protection		IP20	NEMA 1	

All the main technical data provided are "manufacturer" values

RoHS

JB22

22 mm 0.866 in spacing

Mounting instructions

- With flat pliers, cut out the partitions on the terminal block insulating body. Be careful to not cut out the jumpered terminal blocks partitions at both ends of the assembly in order to maintain the IP20, Nema1 protection and insulation,
- Install the jumper bar with the recommended tool and torque.

JB22 jumper bars

Description

Screw jumper bars

Ordering details

Description		Color	Type	Part Number		Pkg qty	Weight (1 pce) g
22 mm 0.866 in spacing	2 poles		JB22-2	1SNK922302R0000		5	27.00
	3 poles		JB22-3	1SNK922303R0000		5	43.30
	5 poles		JB22-5	1SNK922305R0000		5	76.10
	10 poles		JB22-10	1SNK922310R0000		5	157.40

Main technical data

Material specifications	Insulating material	Polyamide		Rail		
	Flammability					
	NF F 16 101			Tool		Allen key Ø 4 mm Ø 0.157 in
Ambient temperature min/max	Service IEC 60068-2-1	-55 ... +110 °C	-67 ... +230 °F			
	Storage	-55 ... +110 °C	-67 ... +230 °F			
	Installing	-5 ... +40 °C	+23 ... +104 °F	Torque		2 Nm ± 0.4 17.7 lb.in ± 3.54

		IEC	UL - CSA	Ex e
Rated current		192 A	175 A	
Rated voltage	Standard use	1000 V	600 V	630 V
	Alternated poles			Not authorized
Impulse withstand voltage		8000 V		
Protection		IP20		

All the main technical data provided are "manufacturer" values

RoHS

Technical data valid for copper conductors only.

1SNK160032S0201

1SNK160100F0014

JB26

26 mm 1.024 in spacing

Mounting instructions

- With flat pliers, cut out the partitions on the terminal block insulating body. Be careful to not cut out the jumpered terminal blocks partitions at both ends of the assembly in order to maintain the IP20, Nema1 protection and insulation,
- Install the jumper bar with the recommended tool and torque.

JB26 jumper bars

Description

Screw jumper bars

Ordering details

Description		Color	Type	Part Number		Pkg qty	Weight (1 pce) g
26 mm 1.02 in spacing	2 poles		JB26-2	1SNK926302R0000		5	41.20
	3 poles		JB26-3	1SNK926303R0000		5	65.70
	5 poles		JB26-5	1SNK926305R0000		5	115.70
	10 poles		JB26-10	1SNK926310R0000		5	241.50

Main technical data

Material specifications	Insulating material			Rail		
	Flammability					
	NF F 16 101			Tool		Allen key Ø 4 mm Ø 0.157 in
Ambient temperature min/max	Service IEC 60068-2-1	-55 ... +110 °C	-67 ... +230 °F			
	Storage	-55 ... +110 °C	-67 ... +230 °F			
	Installing	-5 ... +40 °C	+23 ... +104 °F	Torque		2 Nm ± 0.4 17.7 lb.in ± 3.54

		IEC	UL - CSA	Ex e
Rated current		232 A	230 A	
Rated voltage	Standard use	1000 V	600 V	630 V
	Alternated poles			Not authorized
Impulse withstand voltage		8000 V		
Protection		IP20		

All the main technical data provided are "manufacturer" values

RoHS
RoHS

Technical data valid for copper conductors only.

1SNK160100F0014

BJMI31

31 mm 1.22 in spacing

Mounting instructions

- With flat pliers, cut out the partitions on the terminal block insulating body. Be careful to not cut out the jumpered terminal blocks partitions at both ends of the assembly in order to maintain the IP20, Nema1 protection and insulation,
- Install the jumper bar with the recommended tool and torque.

BJMI31 jumper bars

Description

Screw jumper bars

Ordering details

Description		Color	Type	Part Number		Pkg qty	Weight (1 pce) g
31mm 1.220 in spacing	2 poles		BJMI31.2	1SNA206053R0700		1	120.00
	3 poles		BJMI31.3	1SNA206054R0000		1	190.00

Main technical data

Material specifications	Insulating material			Rail		
	Flammability					
	NF F 16 101			Tool		Allen key Ø 5 mm Ø 0.196 in
Ambient temperature min/max	Service IEC 60068-2-1	-55 ... +110 °C	-67 ... +230 °F			
	Storage	-55 ... +110 °C	-67 ... +230 °F			
	Installing	-5 ... +40 °C	+23 ... +104 °F	Torque		3 Nm ± 0.4 26.55 lb.in ± 3.54

		IEC	UL - CSA	Ex e
Rated current		309 A	445 A	
Rated voltage	Standard use	1000 V	600 V	
	Alternated poles			Not authorized
Impulse withstand voltage		8000 V		
Protection		IP20		

All the main technical data provided are "manufacturer" values

RoHS
RoHS

1SNK160100F0014

BJMI36

36 mm 1.42 in spacing

Mounting instructions

- With flat pliers, cut out the partitions on the terminal block insulating body. Be careful to not cut out the jumpered terminal blocks partitions at both ends of the assembly in order to maintain the IP20, Nema1 protection and insulation,
- Install the jumper bar with the recommended tool and torque.

BJMI36 jumper bars

Description

Screw jumper bars

Ordering details

Description		Color	Type	Part Number		Pkg qty	Weight (1 pce) g
36mm 1.41i7 n spacing	2 poles		BJMI36.2	1SNA206126R2500		1	170.00
	3 poles		BJMI36.3	1SNA206223R0600		1	260.00

Main technical data

Material specifications	Insulating material			Rail		
	Flammability					
	NF F 16 101			Tool		Allen key Ø 5 mm Ø 0.196 in
Ambient temperature min/max	Service IEC 60068-2-1	-55 ... +110 °C	-67 ... +230 °F			
	Storage	-55 ... +110 °C	-67 ... +230 °F			
	Installing	-5 ... +40 °C	+23 ... +104 °F	Torque		3 Nm ± 0.4 26.55 lb.in ± 3.54

		IEC	UL - CSA	Ex e
Rated current		415 A	620 A	
Rated voltage	Standard use	1000 V	600 V	
	Alternated poles			Not authorized
Impulse withstand voltage		8000 V		
Protection		IP20		

All the main technical data provided are "manufacturer" values

RoHS
RoHS

1SNK160097S0201

Technical data valid for copper conductors only.

1SNC160112F0014

PC8

8 mm 0.315 in spacing

Mounting instructions for ZS10-ST...

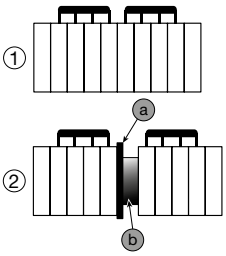

1 - Rated voltage: 630 V (IEC) / 150 V (UL)
2 - Rated voltage: 630 V (IEC) / 300 V (UL)
a - End section ES10-ST
b - End stop BAZ1

PC8 lateral jumper bars

Description

IP20 Comb jumper bars,

- direct insertion in the screw clamp before tightening the screws, above the eventual conductor (if conductor used with ferrule, we recommend the use of long ferrule for optimized mounting ergonomy with test disconnect terminal blocks),
- Multiple versions available in pre-cut poles for test disconnect terminal blocks applications.

Ordering details

Description		Color	Type	Part Number		Pkg qty	Weight (1 pce) g
Lateral jumper bars							
8 mm 0.315 in spacing	2 poles	Black ■	PC8-2	1SNA116538R1700		10	3.00
	3 poles		PC8-3	1SNA116539R1000		10	4.00
	4 poles		PC8-4	1SNA116540R2500		10	6.00
	10 poles		PC8-10	1SNA163313R2400		10	14.00
Lateral jumper bars pre-cut poles							
8 mm 0.315 in spacing	4/6 poles	Black ■	PC8-R1	1SNA400711R0600		10	6.60
	4/8 poles		PC8-R2	1SNA400712R0700		10	7.80
	4/10 poles		PC8-R3	1SNA400713R0000		10	9.00
	3/4 poles		PC8-R4	1SNA400724R0300		10	4.50
	4/7 poles		PC8-R5	1SNA400842R0000		10	6.60
	2/3 poles		PC8-R6	1SNA400843R0000		10	6.60
	4/6 poles		PC8-R7	1SNA400849R0000		10	6.60
	4/8 poles		PC8-R8	1SNA400850R0000		10	7.80

Main technical data

Material specifications	Insulating material	Polyamide	
	Flammability	V0	
	NF F 16 101	I2F3	
Ambient temperature min/max	Service IEC 60068-2-1	-55 ... +110 °C	-67 ... +230 °F
	Storage	-55 ... +110 °C	-67 ... +230 °F
	Installing	-5 ... +40 °C	+23 ... +104 °F

All the main technical data provided are "manufacturer" values

RoHS
RoHS

1SNC160537F0014

PC81

8 mm 0.315 in spacing

PC81 lateral jumper bars

Description

Comb-type jumper bar, allows the connection of consecutive blocks or not by one compression clamp connection.

Ordering details

Description		Color	Type	Part Number		Pkg qty	Weight (1 pce) g
8 mm 0.315 in spacing	10 poles	Grey □	PC81-10	1SNA173523R1100		10	5.00

Main technical data

Material specifications	Insulating material	Brass/polyamide	
	Flammability	V0	
	NF F 16 101	I2F3	
Ambient temperature min/max	Service IEC 60068-2-1	-55 ... +110 °C	-67 ... +230 °F
	Storage	-55 ... +110 °C	-67 ... +230 °F
	Installing	-5 ... +40 °C	-23 ... +104 °F

All the main technical data provided are "manufacturer" values

RoHS
RoHS

Technical data valid for copper conductors only.

CS

0 mm 0 in spacing

Mounting instructions

CS circuit separators

Description

- The CS circuit separator avoids the derating of terminal blocks when cut jumper bars JB are used,
- Compatible with feed-through terminal blocks up to 16 mm² 4 AWG,
- Without spacing loss.

Ordering details

Description	Color	Type	Part Number	Pkg qty	Weight (1 pce) g
0 mm 0 in spacing	Dark grey	CS	1SNK900101R0000	20	0.20

Main technical data

Material specifications	Insulating material	Polyamide	
	Flammability	V0	
	NF F 16 101	I2F2	
Ambient temperature min/max	Service IEC 60068-2-1	-55 ... +110 °C	-67 ... +230 °F
	Storage	-55 ... +110 °C	-67 ... +230 °F
	Installing	-5 ... +40 °C	+23 ... +104 °F

All the main technical data provided are "manufacturer" values

RoHS
RoHS

CS-R1

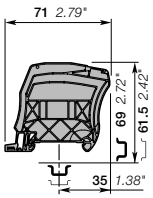

3 mm 0.118 in spacing

Mounting instructions

CS-R1 circuit separators

Description

- Ease the visual identification of the several circuits within your terminal block assemblies,
- Compatible with feed-through terminal blocks up to 35 mm² 0 AWG,
- Intermediate cover holder for CO protective cover,
- Mounting on DIN3-TH35 rail.

Ordering details

Description	Color	Type	Part Number	Pkg qty	Weight (1 pce) g
3 mm 0.118 in spacing	Dark grey	CS-R1	1SNK900103R0000	20	5.20

Main technical data

Material specifications	Insulating material	Polyamide	
	Flammability	V0	
	NF F 16 101	I2F2	
Ambient temperature min/max	Service IEC 60068-2-1	-55 ... +110 °C	-67 ... +230 °F
	Storage	-55 ... +110 °C	-67 ... +230 °F
	Installing	-5 ... +40 °C	+23 ... +104 °F

All the main technical data provided are "manufacturer" values

RoHS
RoHS

Accessories

Description		Color	Type	Part Number	Pkg qty	Weight (1 pce) g
Terminal block markers		White	MG-CPM 13 41790	1SNB041790R0512	1960	0.23
Blank card	In polycarbonate		MC512	1SNK140000R0000	22	9.00
	Blank card		MC512PA	1SNK149999R0000	20	10.00
Universal wire markers holder	5.2 mm 0.205 in spacing	Grey	UMH	1SNK900611R0000	10	0.20

Technical data valid for copper conductors only.

1SNK160018S0201

SHBS/SHB

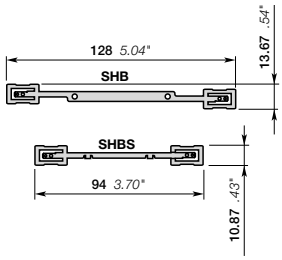

SHBS/SHB shield connectors

Description

– Ensure the continuity of your shield connection,
– Various connection solutions available: RILS cable ties, soldering, quick-connect.

Ordering details

Description	Color	Type	Part Number		Pkg qty	Weight (1 pce) g
Compatible with ZS feed-through terminal blocks		SHBS	1SNK900600R0000		20	3.50
Compatible with ZS and ZK double deck terminal blocks		SHB	1SNK900602R0000		20	4.90

Main technical data

Material specifications	Insulating material		
	Flammability		
	NF F 16 101		
Ambient temperature min/max	Service IEC 60068-2-1	-55 ... +110 °C	-67 ... +230 °F
	Storage	-55 ... +110 °C	-67 ... +230 °F
	Installing	-5 ... +40 °C	+23 ... +104 °F

SHBS	IEC	UL - CSA	Ex e
Rated voltage	320 V		125 V

All the main technical data provided are "manufacturer" values

RoHS
RoHS

Accessories for screw clamp and PI-Spring terminal blocks

Description		Color	Type	Part Number		Pkg qty	Weight (1 pce) g
Cable ties	For SNK shield connector		RILS	1SNK900627R0000		10	0.30

Mounting instructions

– SHBS is directly fixed on the terminal block,
– SHB is fixed on the ES4-D2 end section,
– SHBP is directly fixed on the terminal block,
– Connect the cable shielding on the shielding connector with:
– RILS cable ties,
– quick-connect (the shield connector needs to be prepared),
– soldering iron.

9

1SNK160079S0201

Technical data valid for copper conductors only.

PL protecting covers
Screw clamp terminal block accessories

PL

Description

- Prohibit access to the screw clamps,
- Indicate live circuits.

Ordering details

Description	Color	Type	Part Number		Pkg qty	Weight (1 pce) g
5.2 mm 0.205 in spacing	Transparent	PL5	1SNK900618R0000		10	1.50
6 mm 0.236 in spacing		PL6	1SNK900619R0000		10	1.80
8 mm 0.315 in spacing		PL8	1SNK900620R0000		10	2.60
10 mm 0.394 in spacing		PL10	1SNK900621R0000		10	3.10
16 mm 0.630 in spacing		PL16	1SNK900622R0000		10	4.60

Mounting instructions

- The mounting of the PL does not require a screwdriver,
- The dismounting of the PL requires a screwdriver DIA .4 mm 0.160 in, the screwdriver must be positionned in the cover centered hole.

Main technical data

Material specifications	Insulating material	Polycarbonate	
	Flammability	V2	
	NF F 16 101		
Ambient temperature min/max	Service IEC 60068-2-1	-55 ... +110 °C	-67 ... +230 °F
	Storage	-55 ... +110 °C	-67 ... +230 °F
	Installing	-5 ... +40 °C	+23 ... +104 °F

Mounting instructions

Tool		Flat screwdriver Ø 4 mm Ø 0.157 in

All the main technical data provided are "manufacturer" values

RoHS
RoHS

Technical data valid for copper conductors only.

1SNK160021S0201

CO

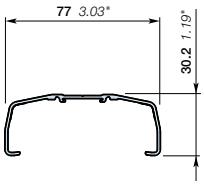

CO protecting covers

Description

- Restrict access to your assembly with the protecting cover CO installed with KCO mounting kit (2 end stops, 2 sealing accessories),
- Compatible with SNK feed-through terminal blocks up to 35 mm² 0 AWG.

Ordering details

Description	Color	Type	Part Number	Pkg qty	Weight (1 pce) g
1 m 39.4 in length	Transparent	CO	1SNK900604R0000	1	300.00

Main technical data

Material specifications	Insulating material	PVC	
	Flammability	V0	
	NF F 16 101		
Ambient temperature min/max	Service IEC 60068-2-1	-55 ... +80 °C	-67 ... +176 °F
	Storage	-55 ... +80 °C	-67 ... +176 °F
	Installing	-5 ... +40 °C	+23 ... +104 °F

All the main technical data provided are "manufacturer" values

RoHS
RoHS

Accessories

Description		Color	Type	Part Number	Pkg qty	Weight (1 pce) g
Protecting cover kits	Mounting kit for cover CO	Dark grey	KCO	1SNK900624R0000	1	47.80
Label		White	PAM43020	1SNA235106R2600	20	27.00

Mounting instructions

Restrict access to the circuit by sealing the cover:
- Drill on the CO center line at 5 mm 0.197 in from the extremity with 5 mm 0.197 in diameter drill,
- Pass the sealing collar through the CO and KCO holes.

KCO

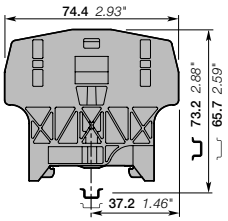

KCO protecting cover kits

Description

Mount your protecting cover with the KCO versatile mounting kit (2 end stops, 2 sealing accessories):
- Maintain the cover,
- Reliably seal the access to the terminal assembly if needed,
- Use it as well as an end stop.

Ordering details

Description	Color	Type	Part Number	Pkg qty	Weight (1 pce) g
Mounting kit for cover CO	Dark grey	KCO	1SNK900624R0000	1	47.80

Main technical data

Material specifications	Insulating material	Polyamide		Rail	G32, TH 35-7.5, TH 35-15, TH 15-5.5
	Flammability	V0			
	NF F 16 101			Tool	Flat screwdriver Ø 4 mm Ø 0.157 in
Ambient temperature min/max	Service IEC 60068-2-1	-55 ... +110 °C	-67 ... +230 °F		
	Storage	-55 ... +110 °C	-67 ... +230 °F		
	Installing	-5 ... +40 °C	+23 ... +104 °F		

All the main technical data provided are "manufacturer" values

RoHS
RoHS

Technical data valid for copper conductors only.

1SNK160045S0201

1SNK160221F0014

SC-JB8

8 mm 0.315 in spacing

SC-JB8 short circuit bridges

Description

- Allow safe short-circuiting of current Tranformers circuits,
- Insulated,
- Fully operated by screwdriver,
- Short circuited fixed position secured thanks to AJS9 tightening,
- Adapted hook shape maintains the bridge on the terminal block in the non short-circuited position,
- The orange version can be used as fixed jumpers.

Ordering details

Description		Color	Type	Part Number	Pkg qty	Weight (1 pce) g
8 mm 0.315 in spacing	2 poles	Yellow	SC-JB8-2	1SNK900652R0000	25	2.00
	3 poles		SC-JB8-3	1SNK900653R0000	25	3.4
	4 poles		SC-JB8-4	1SNK900654R0000	25	4.7
	3/5 poles		SC-JB8-5	1SNK900655R0000	25	4.7
	3 poles	Orange	SC-JB8-3-OR	1SNK900657R0000	25	
	4 poles		SC-JB8-4-OR	1SNK900658R0000	25	

Main technical data

Material specifications	Insulating material	Polyamide	
	Flammability	V0	
	NF F 16 101	I2F3	
Ambient temperature min/max	Service IEC 60068-2-1	-55 ... +110 °C	-67 ... +230 °F
	Storage	-55 ... +110 °C	-67 ... +230 °F
	Installing	-5 ... +40 °C	+23 ... +104 °F

All the main technical data provided are "manufacturer" values

RoHS
RoHS

1SNK161063S0201

Technical data valid for copper conductors only.

AJS

4 mm 0.157 in spacing

AJS test sockets

Description

– Insulated test sockets,
  - Many colors available for circuit identification,
  - Compatible with standard DIA 4 mm 0.157 in test plugs:
  - insulated (according to IEC 60101-031) - not insulated (with mobile protection),
  - Compatible with ZS10-ST…SNK series terminal blocks, M6/8.ST...SNA series terminal blocks, D6/8. ST.RS..Solution series terminal blocks

Ordering details

Description	Color	Type	Part Number		Pkg qty	Weight (1 pce) g
Test sockets DIA 4 mm 0.157 in	Grey	AJS9-GR	1SNA206682R0300		25	3.60
	Blue	AJS9-BL	1SNA206683R0400		25	3.60
	Yellow	AJS9	1SNA179726R0200		25	3.60
	Green	AJS9-GN	1SNA206681R0200		25	3.60
	Red	AJS9-RD	1SNA206720R1400		25	3.60
	Purple	AJS9-PR	1SNA206772R0000		25	3.60
	Brown	AJS9-BR	1SNA206782R0000		25	3.60
	White	AJS9-WH	1SNA206765R0000		25	3.60
	Black	AJS9-BK	1SNA206680R1500		25	3.60

Main technical data

Material specifications	Insulating material	Polyamide	
	Flammability	V0	
	NF F 16 101	I2F3	
Ambient temperature min/max	Service IEC 60068-2-1	-55 ... +110 °C	-67 ... +230 °F
	Storage	-55 ... +110 °C	-67 ... +230 °F
	Installing	-5 ... +40 °C	+23 ... +104 °F

All the main technical data provided are "manufacturer" values

RoHS
RoHS

Mounting instructions

Tool		Flat screwdriver Ø 3.5 mm Ø 0.138 in
Torque		0.5 Nm ± 0.1 4.42 lb.in ± 0.88

Technical data valid for copper conductors only.

EDK2.5-22

EDK2.5-22 end sections

Description

– Compatible with ZDK2.5-22 and ZDK4-22 pluggable terminal blocks.

Description	Color	Type	Part Number	Pkg qty	Weight 1 pce g
2.2 mm 0.087 in spacing	Dark grey	EDK2.5-22	1SNK805910R0000	20	3.08

EDK2.5-21

EDK2.5-21 end sections

Description

– Compatible with ZDK2.5-11, ZDK2.5-11-BL and ZDK2.5-11-PE pluggable terminal blocks.

Description	Color	Type	Part Number	Pkg qty	Weight 1 pce g
1.5 mm 0.059 in spacing	Dark grey	EDK2.5-21	1SNK805914R0000	20	1.90

EDK2.5-11

EDK2.5-11 end sections

Description

– Compatible with ZD2.5-11 pluggable terminal blocks.

Description	Color	Type	Part Number	Pkg qty	Weight 1 pce g
1.5 mm 0.059 in spacing	Dark grey	EDK2.5-11	1SNK805915R0000	20	1.49

EDK2.5-D

EDK2.5-D end sections

Description

– Compatible with ZDK2.5-D2, ZDK2.5-D2-BL, ZDK2.5-D1, ZDK2.5-D1-PE and ZDK2.5-D2-PE pluggable terminal blocks.

Description	Color	Type	Part Number	Pkg qty	Weight 1 pce g
2 mm 0.079 in spacing	Dark grey	EDK2.5-D	1SNK805913R0000	20	3.88

Main technical data

Material specifications	Insulating material	Polyamide	
	Flammability	V0	
	NF F 16 101	I2F2	
Ambient temperature min/max	Service IEC 60068-2-1	-55 ... +110 °C	-67 ... +230 °C
	Storage	-55 ... +110 °C	-67 ... +230 °C
	Installing	-5 ... +40 °C	+23 ... +104 °C

All the main technical data provided are "manufacturer" values.

RoHS
RoHS

Technical data valid for copper conductors only.

1SNK164033S0201

1SNK164028V0014

ED2.5-22

ED2.5-22 end sections

Description

– Compatible with ZD2.5-22 and ZD2.5-22-PE pluggable terminal blocks.

Ordering details

Description	Color	Type	Part Number		Pkg qty	Weight (1 pce) g
2 mm 0.079 in spacing	Dark grey	ED2.5-22	1SNK805917R0000		20	3.64

1SNK160302V0014

EDS4-22

EDS4-22 end sections

Description

– Compatible with ZDS4-22 pluggable terminal block.

Ordering details

Description	Color	Type	Part Number		Pkg qty	Weight (1 pce) g
0.8 mm 0.031 in spacing	Dark grey	EDS4-22	1SNK805911R0000		20	1.85

Main technical data

Material specifications	Insulating material	Polyamide	
	Flammability	V0	
	NF F 16 101	I2F2	
Ambient temperature min/max	Service IEC 60068-2-1	-55 ... +110 °C	-67 ... +230 °C
	Storage	-55 ... +110 °C	-67 ... +230 °C
	Installing	-5 ... +40 °C	+23 ... +104 °C

All the main technical data provided are "manufacturer" values.

RoHS
RoHS

Technical data valid for copper conductors only.

1SNK164034S0201

COP

COP coding pegs

Description

– The coding pegs prevent plugs to be inserted into the wrong circuit.

Ordering details

Description	Color	Type	Part Number		Pkg qty	Weight (1 pce) g
	Dark grey	COP-ZD	1SNK900636R0000		10	3.57

Main technical data

Material specifications	Insulating material	Polyamide	
	Flammability	V0	
	NF F 16 101	I2F2	
Ambient temperature min/max	Service IEC 60068-2-1	-55 ... +110 °C	-67 ... +230 °F
	Storage	-55 ... +110 °C	-67 ... +230 °F
	Installing	-5 ... +40 °C	+23 ... +104 °F

All the main technical data provided are "manufacturer" values.

RoHS
RoHS

Mounting instructions

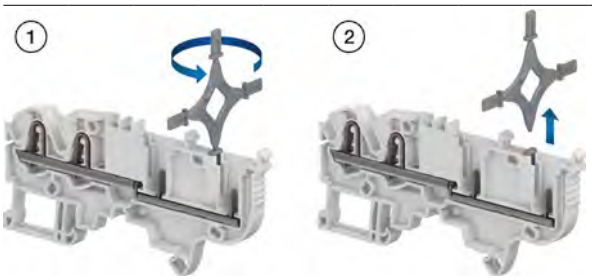

VR

9.4 mm 0.370 in spacing

VR locking devices

Description

– Automatic locking providing excellent plug withstand in case of accidental pulling,
– Lock safely one or two CDK or CDS plugs on ZDK and ZDS pluggable terminal blocks,
– Install one VR... up to 8 poles plugs assembly and two VR... up to 15 poles assembly.

Ordering details

Description	Color	Type	Part Number		Pkg qty	Weight (1 pce) g
9.4 mm 0.370 in spacing	Black	VR-ZD	1SNK900637R0000		50	6.5

Main technical data

Material specifications	Insulating material	Polyacetal	
	Flammability	HB	
	NF F 16 101		
Ambient temperature min/max	Service IEC 60068-2-1	-55 ... +110 °C	-67 ... +230 °F
	Storage	-55 ... +110 °C	-67 ... +230 °F
	Installing	-5 ... +40 °C	+23 ... +104 °F

All the main technical data provided are "manufacturer" values.

RoHS
RoHS

Mounting instructions

1SNK164009S0201

Technical data valid for copper conductors only.

Index
Part Number classification

Part Number	Type	Page
1SNA007865R2600	FC2	110
1SNA103007R2300	PE	211
1SNA103098R2600	SSB20	216
1SNA103099R2700	SSB20T	216
1SNA113542R1000	PC5-2	253
1SNA113544R1200	PC5-10	253
1SNA114205R2000	AD2.5	214
1SNA116538R1700	PC8-2	341
1SNA116539R1000	PC8-3	341
1SNA116540R2500	PC8-4	341
1SNA116900R2700	BADH	117
1SNA160487R2500	HD2.5/6.2G.2G.1	144
1SNA160563R0000	HD6/9.3G.2G	151
1SNA160564R0100	HD6/9.2G.3G	152
1SNA160606R1400	HD6/8.2G.2G.1	145
1SNA160619R1000	HD6/8.2G.2G.2	146
1SNA160621R0200	HD6/9.5G	150
1SNA162309R1000	HD6/14.DG	158
1SNA162315R2500	HD6/14.SF.2G.2G	155
1SNA162971R2700	HD6/14.DH	157
1SNA162972R2000	HD6/14.SDH	161
1SNA162979R0700	HD16/14.FF5.20	195
1SNA162988R2100	HD6/14.SDH.1	160
1SNA162991R1400	HD16/14.FF5.21	194
1SNA163043R2100	AL2	110
1SNA163155R2600	REH3	190
1SNA163156R2700	RTC	153
1SNA163261R0000	AL3	110
1SNA163313R2400	PC8-10	303
1SNA163350R1500	PRH2R	313
1SNA163468R0000	BJH131-10	179
1SNA163475R2700	BJH17	182
1SNA163476R2000	BJH23-10	184
1SNA163479R0300	BJH311	186
1SNA163497R1600	PEFH	153
1SNA163503R2400	BJH105	176
1SNA163518R2200	RPED	153
1SNA164519R2400	BAR	211
1SNA164655R0400	BAH22	153
1SNA164800R0300	PR3.G2	311
1SNA167224R2700	BJS13-10	190
1SNA167489R2200	BAH21	176
1SNA167735R2700	VSJ6	144
1SNA167860R0100	FC4	112
1SNA168355R1300	BAH24	144
1SNA168356R1400	BJH8-10	145
1SNA168357R1500	BJH9-10	145
1SNA168456R0100	BJH8-2	145
1SNA168457R0200	BJH8-3	145
1SNA168458R1300	BJH8-4	145
1SNA168459R1400	BJH8-5	145
1SNA168460R1100	BJH9-2	145
1SNA168461R0600	BJH9-3	145
1SNA168462R0700	BJH9-4	145
1SNA168463R0000	BJH9-5	145
1SNA168481R2300	BJS61-2	144
1SNA168482R2400	BJS61-3	144
1SNA168483R2500	BJS61-4	144
1SNA168484R2600	BJS61-5	144
1SNA168485R2700	BJS61-10	144
1SNA168486R2000	BJH7-2	144
1SNA168487R2100	BJH7-3	144
1SNA168490R0000	BJH7-10	144
1SNA168497R2300	PC	213
1SNA168500R1200	PR4	312
1SNA168672R1100	TGA8	268
1SNA168673R1200	TGA8	268
1SNA168674R1300	TGA8	268
1SNA168675R1400	ANT	268
1SNA168700R2200	PR5	312
1SNA168949R1700	FEHD2	162
1SNA171018R2000	EXBN2	115
1SNA173220R0500	PR30	310
1SNA173241R0600	RDJ6	144
1SNA173438R2400	BJH14-2	192
1SNA173439R2500	BJH14-3	192
1SNA173441R2700	BJH14-4	192
1SNA173449R0700	BJH14-5	192
1SNA173451R2100	BJH14-10	192
1SNA173452R2200	BJH18-2	192
1SNA173453R2300	BJH18-3	192
1SNA173454R2400	BJH18-4	192
1SNA173460R0600	BJH18-5	192
1SNA173461R2300	BJH18-10	192
1SNA173523R1100	PC81-10	268
1SNA173627R2100	EL6	111
1SNA174300R1700	PR3.Z2	310
1SNA174784R2000	BJS6-20	111
1SNA176278R1600	BJMI5-2	110
1SNA176279R1700	BJMI5-3	110
1SNA176280R0500	BJMI5-4	110
1SNA176281R2200	BJMI5-5	110
1SNA176282R2300	BJMI5-10	110
1SNA176663R0000	BJMI6-2	111
1SNA176664R0100	BJMI6-3	111
1SNA176665R0200	BJMI6-4	111
1SNA176666R0300	BJMI6-5	111
1SNA176667R0400	BJMI6-10	111
1SNA176669R1600	BJMI8-2	112
1SNA176670R1300	BJMI8-3	112
1SNA176671R0000	BJMI8-4	112
1SNA176672R0100	BJMI8-5	112
1SNA176673R0200	BJMI8-10	112
1SNA178430R0500	RCPEB	316
1SNA178431R2200	EPR1	316
1SNA178529R0400	PR50	311
1SNA178745R1400	CBM5	110
1SNA178746R1500	CBM8	110
1SNA178944R0400	OUPAD	110
1SNA179371R1600	CN5	268
1SNA179466R0600	OUMAD	110
1SNA179726R0200	AJS9	300
1SNA187312R1400	CPM	153
1SNA190001R2000	D35/27.FF	196
1SNA190002R2100	D70/32.FF	197
1SNA190003R2200	D120/42.FF	198
1SNA190004R2300	D185/55.FF	199
1SNA190005R2400	D300/55.FF	200
1SNA190016R1600	CPUF35	196
1SNA190017R1700	CPUF70	197
1SNA190018R2000	CPUF120	198
1SNA190019R2100	CPUF185	199
1SNA190305R0500	HD2.5/6.3.2G.2G.1	166
1SNA190312R2300	HD2.5/6.3.2G.2G.1.GG	163
1SNA190314R2500	HD2.5/6.3.GG1.2G.2G	164
1SNA190316R2700	HD2.5/6.3.3G.3G.1	162
1SNA190468R0000	E4/6	211
1SNA190607R0400	E6/8	212
1SNA191296R1100	E10/16.S	216
1SNA191302R2700	E10/16	213
1SNA193080R1200	FEE6-1	211
1SNA193085R0300	FEE8-2	212
1SNA193137R0300	FEMT1	214
1SNA193449R2400	FEE10-16	213
1SNA193878R2200	FEH4	146
1SNA195212R1000	M6/8.STP	214
1SNA196792R1700	BNSTP1	214
1SNA196853R1400	BNC62	115
1SNA196854R1500	BNSV62	115
1SNA196896R0000	SCAD	111
1SNA196915R0200	BIE	216
1SNA196924R0300	BNF52	116
1SNA196926R0500	BNCT82	116
1SNA196927R0600	BNSV82	116
1SNA196998R1600	BNF652	115
1SNA197312R1600	CPM	153
1SNA198352R0700	FEH3	144
1SNA198549R0500	FEH9	155
1SNA198692R2500	SCH3	144
1SNA198729R0100	FEH8	158
1SNA199025R1400	HD2.5/6.3.GG.1.2GG	165
1SNA199096R1400	HD2.5/6.3.GH.2G.H	167
1SNA199320R0400	COCF	128
1SNA199321R2100	COCE	119
1SNA199393R2200	SCH6	192
1SNA199394R2300	INH3	192
1SNA199400R0600	FEHD1	147
1SNA199411R1400	FJH501	153
1SNA199412R1500	SCH8	153
1SNA199551R2000	SCAD5	110
1SNA205392R0700	HD4/9.F4.2	177
1SNA205396R0300	HD10/12.F5.2	181
1SNA205424R2700	FJHD40	181
1SNA205427R2200	INHD1	177
1SNA205428R0300	SCHD1	177
1SNA205429R0400	SCHD2	181
1SNA205431R2600	FJHD32	177
1SNA205767R1600	DRF6	196
1SNA205768R2700	DRF8	197
1SNA205769R2000	DRF10	198
1SNA205770R2500	DRF12	199
1SNA205771R1200	DRF16	200
1SNA205772R1300	BJS27-2	196
1SNA205773R1400	BJS27-3	196
1SNA205774R1500	BJS32-2	197
1SNA205775R1600	BJS32-3	197
1SNA205776R1700	BJS42-2	198
1SNA205777R1000	BJS42-3	198
1SNA205778R2100	BJS551-2	199
1SNA205779R2200	BJS551-3	199
1SNA206053R0700	BJMI31.2	239
1SNA206054R0000	BJMI31.3	239
1SNA206126R2500	BJMI36.2	240
1SNA206223R0600	BJMI36.3	240
1SNA206680R1500	AJS9-BK	302
1SNA206681R0200	AJS9-GN	302
1SNA206682R0300	AJS9-GR	302
1SNA206683R0400	AJS9-BL	302
1SNA206720R1400	AJS9-RD	302
1SNA206721R0100	AL4-M3	300
1SNA206765R0000	AJS9-WH	302
1SNA206772R0000	AJS9-PR	302
1SNA206782R0000	AJS9-BR	302
1SNA230000R1200	RC55	110
1SNA231000R0700	RC510	110
1SNA232000R0000	RC65	111
1SNA233000R0100	RC610	111
1SNA234000R0200	RC810	112
1SNA235106R2600	PAM43020	345
1SNA235155R2600	PIB2-TT	316
1SNA235157R2000	PIB2-TT-YL	316
1SNA235158R0100	RCPEAD-TT	316
1SNA235159R0200	RCPEAD-TT-YL	316
1SNA235510R0800	M-W810PC	202
1SNA235511R0600	M-W610PC	201
1SNA235512R1000	M-W1010PC	203
1SNA238000R1600	RC1010	239
1SNA290451R0300	BJE762.2	119
1SNA290452R0400	BJE762.5	119
1SNA290453R0500	BJE762.10	119
1SNA290454R0600	EIP	119
1SNA290455R0700	RB-12W7	119
1SNA295011R1600	HD10/12.F5.3	179
1SNA295012R1700	HD16/14.FF5.21.3	192
1SNA295013R1000	HD16/14.FF5.20.3	193
1SNA295014R1100	HD6/13.FF4	190
1SNA295015R1200	HD6/30.F12G	154
1SNA295298R0300	HD4/10.F4.19	178
1SNA295391R2000	HD4/9.F4	176
1SNA295392R2100	HD4/9.F4.2	177
1SNA295393R2200	HD4/9.FF4	189
1SNA295394R2300	HD10/12.F5	180
1SNA295395R2400	HD10/12.F5.1	181
1SNA295396R2500	HD10/12.F5.2	181
1SNA295397R2600	HD10/12.FF5	191
1SNA295398R0700	HD35/16.F6.19	182
1SNA295399R0000	HD35/16.F6.19.1	183
1SNA295400R0600	HD70/22.F8.31	184
1SNA295401R2300	HD70/22.F8.31.1	185
1SNA295402R2400	HD70/22.F8.31.2	185
1SNA295403R2500	HD120/30.F10.31.1	187

Index
Part Number classification

Part Number	Type	Page
1SNA295405R2700	HD185/36.F12.31.1	188
1SNA295424R1100	FJHD40	178
1SNA295425R1200	FJHD50	191
1SNA295426R1300	FJDHD	178
1SNA295427R1400	INHD1	176
1SNA295428R2500	SCHD1	176
1SNA295429R2600	SCHD2	178
1SNA295430R2300	SCHD5	191
1SNA295431R1000	FJHD32	176
1SNA295448R0100	HD120/30.F10.31	186
1SNA296351R0000	BAM2	110
1SNA399726R0700	EPR2	316
1SNA399730R1700	D1.5/6.ADO.NF	111
1SNA399736R0100	D2.5/8.ADO.NF	112
1SNA399742R1700	D1.5/6.D2.ADO.NF	117
1SNA399748R2500	D4/8.ADO.NF	114
1SNA399749R2600	D2.5/8.ADO.NF1	113
1SNA399752R1100	D2.5/8.S.ADO.NF	116
1SNA399787R0500	CPBP2	240
1SNA399788R1600	CPBP1	239
1SNA399802R0500	FEMAD3	110
1SNA399803R0600	FED2AD2	117
1SNA399804R0700	FEDAD5	115
1SNA399916R2600	D1.5/6.ADO.D2.NF	118
1SNA399963R0500	HD6/24.DH	156
1SNA399964R0600	HD6/24.DH	156
1SNA400014R2700	ES8-CG	215
1SNA400015R2000	ES8-CG	215
1SNA400018R0300	FECPE.2ADO	121
1SNA400019R0400	FECPE.ADO	119
1SNA400061R0600	D2.5/7.ADO-CPE.NF	122
1SNA400062R0700	D2.5/7.2ADO-CPE.NF	123
1SNA400063R0000	VRADO.CPE7	119
1SNA400083R2500	D1.5/6.S.ADO.NF	115
1SNA400142R0400	BNSV62-1	115
1SNA400153R0700	D1.5/7.ADO-CPE.NF	119
1SNA400154R0000	D1.5/7.2ADO-CPE.NF	121
1SNA400156R0200	D2.5/7.ADO-CPE.NF1	120
1SNA400240R2200	D4/7.ADO-CPE.NF	124
1SNA400241R1700	D4/7.2ADO-CPE.NF	125
1SNA400315R0100	D1.5/5.ADO.NF	110
1SNA400703R1700	D2.5/7.2CPE	126
1SNA400704R1000	D2.5/7.CPE.CPE	127
1SNA400708R2400	FECPE	126
1SNA400711R0600	PC8-R1	301
1SNA400712R0700	PC8-R2	303
1SNA400713R0000	PC8-R3	303
1SNA400724R0300	PC8-R4	303
1SNA400766R1500	HD6/7.5G	147
1SNA400767R1600	HD6/7.3G.2G	148
1SNA400768R2700	HD6/7.2G.3G	149
1SNA400782R0000	HD6/22.F12G	153
1SNA400799R0000	FESDH	159
1SNA400800R0000	HD6/9.SDH.1	159
1SNA400842R0000	PC8-R5	303
1SNA400843R0000	PC8-R6	303
1SNA400849R0000	PC8-R7	303
1SNA400850R0000	PC8-R8	303
1SNA510003R0000	RGW2.5-V0	201
1SNA510005R0000	RGW25-M5-V0	203
1SNA510006R0000	RGW25-M6-V0	204
1SNA510024R0000	RGW6-V0	202
1SNA511003R0500	RGW2.5-PE-V0	201
1SNA511024R0500	RGW6-PE-V0	202
1SNA519003R0000	E-RGW2.5	201
1SNA519004R0000	E-RGW6	202
1SNA519005R0000	E-RGW25	203
1SNA519103R0200	PC-RG2.5-2	201
1SNA519103R0300	PC-RG2.5-3	201
1SNA519103R0400	PC-RG2.5-4	201
1SNA519103R1000	PC-RG2.5-10	201
1SNA519104R0200	PC-RG6-2	202
1SNA519104R0300	PC-RG6-3	202
1SNA519104R0400	PC-RG6-4	202
1SNA519104R0700	PC-RG6-7	202
1SNA519104R1000	PC-RG6-10	202
1SNA519106R0200	PC-RG25-2	203

Part Number	Type	Page
1SNA519200R0000	CS-RGW-S	201
1SNA519201R0000	CS-RGW-L	203
1SNB041090R0510	MG-CPM-01 41090	201
1SNB041096R0810	MG-CPM-01 41096	202
1SNB041790R0512	MG-CPM 13 41790	19
1SNB041791R0612	MG-CPM 13 41791	28
1SNB043196R0012	MG-CPMFA 43196	93
1SNB045194R1735	MG-TAR 45194	316
1SNB045490R8530	MG-TAR 45490	316
1SNB046415R0615	MG-VYT 46415	332
1SNB046915R0615	MG-VYT 46915	332
1SNB049148R1735	MG-TAA 49148	316
1SNB049198R1735	MG-TAA 49198	316
1SNB049448R8530	MG-TAA 49448	316
1SNB049498R8530	MG-TAA 49498	316
1SNK140000R0000	MC512	19
1SNK149999R0000	MC512PA	19
1SNK150000R0000	MC612	22
1SNK159999R0000	MC612PA	22
1SNK160000R0000	MC812	28
1SNK169999R0000	MC812PA	28
1SNK505010R0000	ZS4	228
1SNK505020R0000	ZS4-BL	228
1SNK505030R0000	ZS4-OR	228
1SNK505060R0000	ZS4-YL	228
1SNK505061R0000	ZS4-GN	228
1SNK505062R0000	ZS4-RD	228
1SNK505063R0000	ZS4-PR	228
1SNK505064R0000	ZS4-BR	228
1SNK505065R0000	ZS4-WH	228
1SNK505066R0000	ZS4-BK	228
1SNK505150R0000	ZS4-PE	228
1SNK505210R0000	ZS4-D2	284
1SNK505211R0000	ZS4-D1	285
1SNK505212R0000	ZS4-T3	294
1SNK505214R0000	ZS4-D-CH-UD	296
1SNK505215R0000	ZS4-D-CH-DU	297
1SNK505220R0000	ZS4-D2-BL	284
1SNK505230R0000	ZS4-D2-OR	284
1SNK505310R0000	ZS4-S	253
1SNK505311R0000	ZS4-S-T2	254
1SNK505312R0000	ZS4-S-T2.3	254
1SNK505313R0000	ZS4-SP	260
1SNK505314R0000	ZS4-SP-T2	261
1SNK505315R0000	ZS4-D2-S	290
1SNK505316R0000	ZS4-D2-S-T2	291
1SNK505320R0000	ZS4-S-BL	253
1SNK505321R0000	ZS4-S-T2-BL	254
1SNK505330R0000	ZS4-S-OR	253
1SNK505331R0000	ZS4-S-T2-OR	254
1SNK505910R0000	ES4	228
1SNK505911R0000	ES6-4S	231
1SNK505912R0000	ES6-3S	230
1SNK505960R0000	ES4-D2	284
1SNK505961R0000	ES4-T3	294
1SNK506010R0000	ZS6	229
1SNK506011R0000	ZS6-3S	230
1SNK506012R0000	ZS6-4S	231
1SNK506013R0000	ZS4-R2	278
1SNK506020R0000	ZS6-BL	229
1SNK506021R0000	ZS6-3S-BL	230
1SNK506022R0000	ZS6-4S-BL	231
1SNK506030R0000	ZS6-OR	229
1SNK506060R0000	ZS6-YL	229
1SNK506061R0000	ZS6-GN	229
1SNK506062R0000	ZS6-RD	229
1SNK506063R0000	ZS6-PR	229
1SNK506064R0000	ZS6-BR	229
1SNK506065R0000	ZS6-WH	229
1SNK506066R0000	ZS6-BK	229
1SNK506067R0000	ZS6-3S-YL	230
1SNK506068R0000	ZS6-4S-YL	231
1SNK506150R0000	ZS6-PE	229
1SNK506151R0000	ZS6-3S-PE	230
1SNK506152R0000	ZS6-4S-PE	231
1SNK506153R0000	ZS4-PE-R2	279
1SNK506210R0000	ZS6-D2	286

Part Number	Type	Page
1SNK506211R0000	ZS6-D1	287
1SNK506212R0000	ZS6-D2-PE	288
1SNK506213R0000	ZS4-T3-R1	295
1SNK506214R0000	ZS6-D1-RD	287
1SNK506220R0000	ZS6-D2-BL	286
1SNK506230R0000	ZS6-D2-OR	286
1SNK506250R0000	ZS6-D1-PE	286
1SNK506260R0000	ZS6-D2-YL	286
1SNK506262R0000	ZS6-D2-RD	286
1SNK506265R0000	ZS6-D2-WH	286
1SNK506266R0000	ZS6-D2-BK	286
1SNK506310R0000	ZS4-S-R1	255
1SNK506311R0000	ZS4-S-T2-R1	256
1SNK506312R0000	ZS4-S-T2.3-R1	256
1SNK506313R0000	ZS4-SP-R1	262
1SNK506314R0000	ZS4-SP-T2-R1	263
1SNK506315R0000	ZS6-S	257
1SNK506316R0000	ZS6-S-4S-T2	258
1SNK506320R0000	ZS4-S-R1-BL	255
1SNK506321R0000	ZS4-S-T2-R1-BL	256
1SNK506322R0000	ZS6-S-BL	257
1SNK506330R0000	ZS4-S-R1-OR	255
1SNK506331R0000	ZS4-S-T2-R1-OR	256
1SNK506410R0000	ZS4-SF	274
1SNK506411R0000	ZS4-SF-T2	275
1SNK506412R0000	ZS4-SF-R1	276
1SNK506413R0000	ZS4-SF-R2	277
1SNK506414R0000	ZS4-S-R2	280
1SNK506415R0000	ZS4-SF-R3	276
1SNK506416R0000	ZS4-SF-R4	277
1SNK508010R0000	ZS10	232
1SNK508011R0000	ZS10-R1	300
1SNK508013R0000	ZS4-R1	272
1SNK508020R0000	ZS10-BL	232
1SNK508030R0000	ZS10-OR	232
1SNK508060R0000	ZS10-YL	232
1SNK508061R0000	ZS10-GN	232
1SNK508062R0000	ZS10-RD	232
1SNK508063R0000	ZS10-PR	232
1SNK508064R0000	ZS10-BR	232
1SNK508065R0000	ZS10-WH	232
1SNK508066R0000	ZS10-BK	232
1SNK508150R0000	ZS10-PE	232
1SNK508151R0000	ZS10-PE-R1	301
1SNK508310R0000	ZS10-ST	302
1SNK508311R0000	ZS10-ST-T4	300
1SNK508312R0000	ZS10-ST-1	300
1SNK508315R0000	ZS10-S	259
1SNK508316R0000	ZS10-SP	264
1SNK508320R0000	ZS10-S-BL	259
1SNK508410R0000	ZS4-SF1	268
1SNK508411R0000	ZS4-SF1-T2	269
1SNK508412R0000	ZS4-SF1-R1	270
1SNK508413R0000	ZS4-SF1-R2	271
1SNK508414R0000	ZS4-SF1-R3	270
1SNK508415R0000	ZS4-SF1-R4	271
1SNK508416R0000	ZS4-S-R3	273
1SNK508417R0000	ZS10-S-R2	283
1SNK508418R0000	ZS10-SF	281
1SNK508419R0000	ZS4-S-R3-T2	273
1SNK508421R0000	ZS10-SF-R1	282
1SNK508422R0000	ZS10-SF-R3	282
1SNK508423R0000	ZS4-D2-SF1-R1	293
1SNK508424R0000	ZS4-D2-SF1-R3	293
1SNK508425R0000	ZS4-D2-SF1	292
1SNK508430R0000	ZS4-SF1-OR	268
1SNK508910R0000	ES10-ST	300
1SNK508911R0000	ES4-D2-SF1	292
1SNK508960R0000	ES4-SF	268
1SNK510010R0000	ZS16	233
1SNK510020R0000	ZS16-BL	233
1SNK510030R0000	ZS16-OR	233
1SNK510150R0000	ZS16-PE	233
1SNK512010R0000	ZS25	234
1SNK512020R0000	ZS25-BL	234
1SNK512060R0000	ZS25-YL	234
1SNK512150R0000	ZS25-PE	234

Index
Part Number classification

Part Number	Type	Page
1SNK516010R0000	ZS35	235
1SNK516011R0000	ZS50	236
1SNK516020R0000	ZS35-BL	235
1SNK516021R0000	ZS50-BL	236
1SNK516030R0000	ZS35-OR	235
1SNK516060R0000	ZS50-YL	236
1SNK516063R0000	ZS50-RD	236
1SNK516064R0000	ZS50-BK	236
1SNK516150R0000	ZS35-PE	235
1SNK516151R0000	ZS50-PE	236
1SNK516170R0000	ZS35-PEN	249
1SNK522010R0000	ZS70	237
1SNK522020R0000	ZS70-BL	237
1SNK522060R0000	ZS70-YL	237
1SNK522150R0000	ZS70-PE	237
1SNK526010R0000	ZS95	238
1SNK526020R0000	ZS95-BL	238
1SNK526060R0000	ZS95-YL	238
1SNK526150R0000	ZS95-PE	238
1SNK531010R0000	ZS150	239
1SNK531020R0000	ZS150-BL	239
1SNK531060R0000	ZS150-YL	239
1SNK536010R0000	ZS240	240
1SNK536020R0000	ZS240-BL	240
1SNK536060R0000	ZS240-YL	240
1SNK705010R0000	ZK2.5	19
1SNK705011R0000	ZK2.5-3P	20
1SNK705012R0000	ZK2.5-4P	21
1SNK705020R0000	ZK2.5-BL	19
1SNK705021R0000	ZK2.5-3P-BL	20
1SNK705022R0000	ZK2.5-4P-BL	21
1SNK705030R0000	ZK2.5-OR	19
1SNK705031R0000	ZK2.5-3P-OR	20
1SNK705032R0000	ZK2.5-4P-OR	21
1SNK705060R0000	ZK2.5-YL	19
1SNK705061R0000	ZK2.5-GN	19
1SNK705062R0000	ZK2.5-RD	19
1SNK705065R0000	ZK2.5-WH	19
1SNK705066R0000	ZK2.5-BK	19
1SNK705067R0000	ZK2.5-3P-YL	20
1SNK705068R0000	ZK2.5-3P-GN	20
1SNK705069R0000	ZK2.5-3P-RD	20
1SNK705072R0000	ZK2.5-3P-WH	20
1SNK705073R0000	ZK2.5-3P-BK	20
1SNK705074R0000	ZK2.5-4P-YL	21
1SNK705075R0000	ZK2.5-4P-GN	21
1SNK705076R0000	ZK2.5-4P-RD	21
1SNK705079R0000	ZK2.5-4P-WH	21
1SNK705080R0000	ZK2.5-4P-BK	21
1SNK705150R0000	ZK2.5-PE	19
1SNK705151R0000	ZK2.5-PE-3P	20
1SNK705152R0000	ZK2.5-PE-4P	21
1SNK705210R0000	ZK2.5-D2	54
1SNK705211R0000	ZK2.5-D1	55
1SNK705212R0000	ZK2.5-D2-PE	56
1SNK705213R0000	ZK2.5-D-CH-UD	65
1SNK705214R0000	ZK2.5-D-CH-DU	66
1SNK705219R0000	ZK2.5-D-CH2-DU-RL	67
1SNK705220R0000	ZK2.5-D2-BL	54
1SNK705250R0000	ZK2.5-D1-PE	54
1SNK705310R0000	ZK2.5-S	47
1SNK705311R0000	ZK2.5-SP	50
1SNK705312R0000	ZK2.5-S-4P	48
1SNK705313R0000	ZK2.5-SP-4P	51
1SNK705320R0000	ZK2.5-S-BL	47
1SNK705321R0000	ZK2.5-S-4P-BL	48
1SNK705330R0000	ZK2.5-S-OR	47
1SNK705331R0000	ZK2.5-S-4P-OR	48
1SNK705510R0000	ZK2.5-T3	58
1SNK705511R0000	ZK2.5-T1	59
1SNK705512R0000	ZK2.5-L-L-PE	60
1SNK705513R0000	ZK2.5-L-N-PE	61
1SNK705550R0000	ZK2.5-T1-PE	58
1SNK705710R0000	ZK2.5-CH-4P-LR	63
1SNK705711R0000	ZK2.5-CH-4P-RL	64
1SNK705910R0000	EK2.5	19
1SNK705911R0000	EK2.5-3P	20
1SNK705912R0000	EK2.5-4P	21
1SNK705913R0000	EK2.5-S-4P	48
1SNK705960R0000	EK2.5-D2	54
1SNK705961R0000	EK2.5-T3	58
1SNK706010R0000	ZK4	22
1SNK706011R0000	ZK4-3P	23
1SNK706012R0000	ZK4-4P	24
1SNK706020R0000	ZK4-BL	22
1SNK706021R0000	ZK4-3P-BL	23
1SNK706022R0000	ZK4-4P-BL	24
1SNK706030R0000	ZK4-OR	22
1SNK706031R0000	ZK4-3P-OR	23
1SNK706032R0000	ZK4-4P-OR	24
1SNK706060R0000	ZK4-YL	22
1SNK706062R0000	ZK4-RD	22
1SNK706066R0000	ZK4-BK	22
1SNK706150R0000	ZK4-PE	22
1SNK706151R0000	ZK4-PE-3P	23
1SNK706152R0000	ZK4-PE-4P	24
1SNK706310R0000	ZK2.5-S-R1	49
1SNK706410R0000	ZK2.5-SF	49
1SNK706411R0000	ZK2.5-SF-R1	53
1SNK706412R0000	ZK2.5-SF-R3	53
1SNK708010R0000	ZK6	25
1SNK708011R0000	ZK6-3P	26
1SNK708020R0000	ZK6-BL	25
1SNK708021R0000	ZK6-3P-BL	26
1SNK708030R0000	ZK6-OR	25
1SNK708031R0000	ZK6-3P-OR	26
1SNK708060R0000	ZK6-YL	25
1SNK708062R0000	ZK6-RD	25
1SNK708066R0000	ZK6-BK	25
1SNK708150R0000	ZK6-PE	25
1SNK708151R0000	ZK6-PE-3P	26
1SNK708911R0000	EK6-3P	26
1SNK710010R0000	ZK10	27
1SNK710011R0000	ZK10-3P	29
1SNK710020R0000	ZK10-BL	27
1SNK710021R0000	ZK10-3P-BL	29
1SNK710030R0000	ZK10-OR	27
1SNK710063R0000	ZK10-PV	28
1SNK710064R0000	ZK10-3P-PV	30
1SNK710065R0000	ZK10-PV-BL	28
1SNK710067R0000	ZK10-3P-PV-BL	30
1SNK710150R0000	ZK10-PE	28
1SNK710151R0000	ZK10-PE-3P	30
1SNK710910R0000	EK10	27
1SNK710911R0000	EK10-3P	29
1SNK712010R0000	ZK16	31
1SNK712011R0000	ZK16-3P	33
1SNK712020R0000	ZK16-BL	31
1SNK712021R0000	ZK16-3P-BL	33
1SNK712063R0000	ZK16-PV	32
1SNK712064R0000	ZK16-3P-PV	34
1SNK712065R0000	ZK16-PV-BL	32
1SNK712067R0000	ZK16-3P-PV-BL	34
1SNK712150R0000	ZK16-PE	32
1SNK712151R0000	ZK16-PE-3P	34
1SNK805010R0000	ZDK2.5-22	85
1SNK805013R0000	ZDS4-22	98
1SNK805014R0000	ZDK2.5-21	84
1SNK805015R0000	ZDK2.5-11	83
1SNK805016R0000	ZD2.5-11	80
1SNK805017R0000	ZD2.5-22	81
1SNK805020R0000	ZDK2.5-22-BL	85
1SNK805025R0000	ZDK2.5-11-BL	83
1SNK805150R0000	ZDK2.5-11-PE	87
1SNK805152R0000	ZDK2.5-22-PE	88
1SNK805156R0000	ZD2.5-22-PE	82
1SNK805212R0000	ZDK2.5-D2-PE	91
1SNK805213R0000	ZDK2.5-D2	89
1SNK805214R0000	ZDK2.5-D1	90
1SNK805223R0000	ZDK2.5-D2-BL	89
1SNK805250R0000	ZDK2.5-D1-PE	92
1SNK805712R0000	CDK2.5	80
1SNK805713R0000	CDK2.5-E	80
1SNK805714R0000	CDS4	98
1SNK805715R0000	CDS4-E	98
1SNK805738R0000	CDK2.5-J	94
1SNK805739R0000	CDK2.5-J-E	94
1SNK805740R0000	CDK2.5-2P-J	95
1SNK805741R0000	CDK2.5-2P-J-E	95
1SNK805742R0000	CDK2.5-BL	83
1SNK805743R0000	CDK2.5-BL-E	83
1SNK805744R0000	CDK2.5-J-BL	94
1SNK805745R0000	CDK2.5-J-BL-E	94
1SNK805746R0000	CDK2.5-2P-J-BL	95
1SNK805747R0000	CDK2.5-2P-J-BL-E	95
1SNK805748R0000	CDK2.5-J-PE	94
1SNK805749R0000	CDK2.5-J-PE-E	94
1SNK805750R0000	CDK2.5-PE	82
1SNK805751R0000	CDK2.5-2P-J-PE	95
1SNK805752R0000	CDK2.5-2P-J-PE-E	95
1SNK805753R0000	CDK2.5-PE-E	82
1SNK805910R0000	EDK2.5-22	85
1SNK805911R0000	EDS4-22	98
1SNK805913R0000	EDK2.5-D	89
1SNK805914R0000	EDK2.5-21	84
1SNK805915R0000	EDK2.5-11	80
1SNK805917R0000	ED2.5-22	81
1SNK806010R0000	ZDK4-22	86
1SNK806013R0000	ZDS4-22-R1	100
1SNK806712R0000	CDK4	86
1SNK806713R0000	CDK4-E	86
1SNK806714R0000	CDS4-R1	100
1SNK900001R0000	BAM4	201
1SNK900002R0000	BAZ1	28
1SNK900101R0000	CS	228
1SNK900102R0000	BAZH1	203
1SNK900103R0000	CS-R1	228
1SNK900104R0000	ES-TC8	25
1SNK900105R0000	ES-TC6	22
1SNK900106R0000	CS-R2	19
1SNK900107R0000	CS-R3	28
1SNK900200R0000	TC5	19
1SNK900201R0000	TC5-R1	19
1SNK900203R0000	TP2	28
1SNK900205R0000	TP4	28
1SNK900401R0000	PG5	50
1SNK900402R0000	PG5-R1	50
1SNK900403R0000	PG5-R2	326
1SNK900600R0000	SHBS	228
1SNK900601R0000	SHBP	19
1SNK900602R0000	SHB	54
1SNK900603R0000	JB85-3	19
1SNK900604R0000	CO	303
1SNK900605R0000	LH	314
1SNK900606R0000	LH-J	54
1SNK900607R0000	LH-R1	314
1SNK900611R0000	UMH	28
1SNK900618R0000	PL5	228
1SNK900619R0000	PL6	229
1SNK900620R0000	PL8	232
1SNK900621R0000	PL10	233
1SNK900622R0000	PL16	235
1SNK900624R0000	KCO	303
1SNK900625R0000	PT-3	325
1SNK900627R0000	RILS	334
1SNK900630R0000	MCLH	316
1SNK900631R0000	MCLH-R1	316
1SNK900633R0000	MCLH-YL	316
1SNK900634R0000	MCLH-R1-YL	316
1SNK900636R0000	COP-ZD	80
1SNK900637R0000	VR-ZD	93
1SNK900640R0000	TO3.5-50	328
1SNK900641R0000	TO4-100	328
1SNK900642R0000	TO5.5-125	328
1SNK900643R0000	TO6.5-150	328
1SNK900644R0000	TO3.5-100-INS	328
1SNK900650R0000	PS-3	328
1SNK900652R0000	SC-JB8-2	300
1SNK900653R0000	SC-JB8-3	304
1SNK900654R0000	SC-JB8-4	304
1SNK900655R0000	SC-JB8-5	346

Index
Part Number classification

Part Number	Type	Page
1SNK900657R0000	SC-JB8-3-OR	346
1SNK900658R0000	SC-JB8-4-OR	346
1SNK900659R0000	TO3.5-50-A	328
1SNK900660R0000	PT-ZD	93
1SNK905302R0000	JB5-2	19
1SNK905303R0000	JB5-3	19
1SNK905304R0000	JB5-4	19
1SNK905305R0000	JB5-5	19
1SNK905310R0000	JB5-10	19
1SNK905350R0000	JB5-50	19
1SNK906302R0000	JB6-2	22
1SNK906303R0000	JB6-3	22
1SNK906304R0000	JB6-4	22
1SNK906305R0000	JB6-5	22
1SNK906310R0000	JB6-10	22
1SNK906350R0000	JB6-50	22
1SNK908302R0000	JB8-2	25
1SNK908303R0000	JB8-3	25
1SNK908304R0000	JB8-4	25
1SNK908305R0000	JB8-5	25
1SNK908310R0000	JB8-10	25
1SNK908902R0000	JB8-2-R1	302
1SNK908903R0000	JB8-3-R1	302
1SNK908904R0000	JB8-4-R1	302
1SNK908905R0000	JB8-5-R1	302
1SNK908910R0000	JB8-10-R1	302
1SNK910302R0000	JB10-2	27
1SNK910303R0000	JB10-3	27
1SNK910304R0000	JB10-4	27
1SNK910305R0000	JB10-5	27
1SNK910310R0000	JB10-10	27
1SNK912302R0000	JB12-2	28
1SNK912303R0000	JB12-3	28
1SNK912305R0000	JB12-5	28
1SNK916302R0000	JB16-2	235
1SNK916303R0000	JB16-3	235
1SNK916304R0000	JB16-4	235
1SNK916305R0000	JB16-5	235
1SNK916310R0000	JB16-10	235
1SNK922302R0000	JB22-2	237
1SNK922303R0000	JB22-3	237
1SNK922305R0000	JB22-5	237
1SNK922310R0000	JB22-10	237
1SNK926302R0000	JB26-2	238
1SNK926303R0000	JB26-3	238
1SNK926305R0000	JB26-5	238
1SNK926310R0000	JB26-10	238
1SSS266202R8800	FIC F.ADO.T1.2P.NF	128
1SSS266202R9800	FIC F.ADO.T1.B.2P.NF	129
1SSS266203R8800	FIC F.ADO.T1.3P.NF	128
1SSS266203R9800	FIC F.ADO.T1.B.3P.NF	129
1SSS266204R8800	FIC F.ADO.T1.4P.NF	128
1SSS266204R9800	FIC F.ADO.T1.B.4P.NF	129
1SSS266205R8800	FIC F.ADO.T1.5P.NF	128
1SSS266205R9800	FIC F.ADO.T1.B.5P.NF	129
1SSS266206R8800	FIC F.ADO.T1.6P.NF	128
1SSS266206R9800	FIC F.ADO.T1.B.6P.NF	129
1SSS266207R8800	FIC F.ADO.T1.7P.NF	128
1SSS266208R8800	FIC F.ADO.T1.8P.NF	128
1SSS266208R9800	FIC F.ADO.T1.B.8P.NF	129
1SSS266209R8800	FIC F.ADO.T1.9P.NF	128
1SSS266210R8800	FIC F.ADO.T1.10P.NF	128
1SSS266210R9800	FIC F.ADO.T1.B.10P.NF	129
1SSS267202R8800	FIC F.ADO.T2.2P.NF	131
1SSS267202R9800	FIC F.ADO.T2.B.2P.NF	132
1SSS267203R8800	FIC F.ADO.T2.3P.NF	131
1SSS267203R9800	FIC F.ADO.T2.B.3P.NF	132
1SSS267204R8800	FIC F.ADO.T2.4P.NF	131
1SSS267204R9800	FIC F.ADO.T2.B.4P.NF	132
1SSS267205R8800	FIC F.ADO.T2.5P.NF	131
1SSS267205R9800	FIC F.ADO.T2.B.5P.NF	132
1SSS267206R8800	FIC F.ADO.T2.6P.NF	131
1SSS267206R9800	FIC F.ADO.T2.B.6P.NF	132
1SSS267207R8800	FIC F.ADO.T2.7P.NF	131
1SSS267208R8800	FIC F.ADO.T2.8P.NF	131
1SSS267208R9800	FIC F.ADO.T2.B.8P.NF	132
1SSS267210R8800	FIC F.ADO.T2.10P.NF	131
1SSS267210R9800	FIC F.ADO.T2.B.10P.NF	132
1SSS267216R9800	FIC F.ADO.T2.B.16P.NF	132
1SSS276204R8800	FIC F.ADO.T3.4P.NF	133
1SSS276205R8800	FIC F.ADO.T3.5P.NF	133
1SSS277202R8800	FIC F.ADO.T3-.2P.NF	130
1SSS277203R8800	FIC F.ADO.T3-.3P.NF	130
1SSS277204R8800	FIC F.ADO.T3-.4P.NF	130
1SSS277205R8800	FIC F.ADO.T3-.5P.NF	130
1SSS277206R8800	FIC F.ADO.T3-.6P.NF	130
1SSS299253R2800	PT1	128
1SSS299254R2800	PT2	128
1SSS366202R4100	FIC M.ADO.T1.FI.2P.NF	134
1SSS366203R4100	FIC M.ADO.T1.FI.3P.NF	134
1SSS366204R4100	FIC M.ADO.T1.FI.4P.NF	134
1SSS366205R4100	FIC M.ADO.T1.FI.5P.NF	134
1SSS366206R4100	FIC M.ADO.T1.FI.6P.NF	134
1SSS366208R4100	FIC M.ADO.T1.FI.8P.NF	134
1SSS366210R4100	FIC M.ADO.T1.FI.10P.NF	134
1SSS367202R4100	FIC M.ADO.T2.FI.2P.NF	135
1SSS367203R4100	FIC M.ADO.T2.FI.3P.NF	135
1SSS367204R4100	FIC M.ADO.T2.FI.4P.NF	135
1SSS367205R4100	FIC M.ADO.T2.FI.5P.NF	135
1SSS367206R4100	FIC M.ADO.T2.FI.6P.NF	135
1SSS367208R4100	FIC M.ADO.T2.FI.8P.NF	135
1SSS367210R4100	FIC M.ADO.T2.FI.10P.NF	135

Index
Type classification

Type	Part Number	Page
AD2.5	1SNA114205R2000	214
AJS9	1SNA179726R0200	300
AJS9-BK	1SNA206680R1500	302
AJS9-BL	1SNA206683R0400	302
AJS9-BR	1SNA206782R0000	302
AJS9-GN	1SNA206681R0200	302
AJS9-GR	1SNA206682R0300	302
AJS9-PR	1SNA206772R0000	302
AJS9-RD	1SNA206720R1400	302
AJS9-WH	1SNA206765R0000	302
AL2	1SNA163043R2100	110
AL3	1SNA163261R0000	110
AL4-M3	1SNA206721R0100	300
ANT	1SNA168675R1400	268
BADH	1SNA116900R2700	117
BAH21	1SNA167489R2200	176
BAH22	1SNA164655R0400	153
BAH24	1SNA168355R1300	144
BAM2	1SNA296351R0000	110
BAM4	1SNK900001R0000	201
BAR	1SNA164519R2400	211
BAZ1	1SNK900002R0000	28
BAZH1	1SNK900102R0000	203
BIE	1SNA196915R0200	216
BJE762.10	1SNA290453R0500	119
BJE762.2	1SNA290451R0300	119
BJE762.5	1SNA290452R0400	119
BJH105	1SNA163503R2400	176
BJH131-10	1SNA163468R0000	179
BJH14-10	1SNA173451R2100	192
BJH14-2	1SNA173438R2400	192
BJH14-3	1SNA173439R2500	192
BJH14-4	1SNA173441R2700	192
BJH14-5	1SNA173449R0700	192
BJH17	1SNA163475R2700	182
BJH18-10	1SNA173461R2300	192
BJH18-2	1SNA173452R2200	192
BJH18-3	1SNA173453R2300	192
BJH18-4	1SNA173454R2400	192
BJH18-5	1SNA173460R0600	192
BJH23-10	1SNA163476R2000	184
BJH311	1SNA163479R0300	186
BJH7-10	1SNA168490R0000	144
BJH7-2	1SNA168486R2000	144
BJH7-3	1SNA168487R2100	144
BJH8-10	1SNA168356R1400	145
BJH8-2	1SNA168456R0100	145
BJH8-3	1SNA168457R0200	145
BJH8-4	1SNA168458R1300	145
BJH8-5	1SNA168459R1400	145
BJH9-10	1SNA168357R1500	145
BJH9-2	1SNA168460R1100	145
BJH9-3	1SNA168461R0600	145
BJH9-4	1SNA168462R0700	145
BJH9-5	1SNA168463R0000	145
BJMI31.2	1SNA206053R0700	239
BJMI31.3	1SNA206054R0000	239
BJMI36.2	1SNA206126R2500	240
BJMI36.3	1SNA206223R0600	240
BJMI5-10	1SNA176282R2300	110
BJMI5-2	1SNA176278R1600	110
BJMI5-3	1SNA176279R1700	110
BJMI5-4	1SNA176280R0500	110
BJMI5-5	1SNA176281R2200	110
BJMI6-10	1SNA176667R0400	111
BJMI6-2	1SNA176663R0000	111
BJMI6-3	1SNA176664R0100	111
BJMI6-4	1SNA176665R0200	111
BJMI6-5	1SNA176666R0300	111
BJMI8-10	1SNA176673R0200	112
BJMI8-2	1SNA176669R1600	112
BJMI8-3	1SNA176670R1300	112
BJMI8-4	1SNA176671R0000	112
BJMI8-5	1SNA176672R0100	112
BJS13-10	1SNA167224R2700	190
BJS27-2	1SNA205772R1300	196
BJS27-3	1SNA205773R1400	196
BJS32-2	1SNA205774R1500	197
BJS32-3	1SNA205775R1600	197
BJS42-2	1SNA205776R1700	198
BJS42-3	1SNA205777R1000	198
BJS551-2	1SNA205778R2100	199
BJS551-3	1SNA205779R2200	199
BJS61-10	1SNA168485R2700	144
BJS61-2	1SNA168481R2300	144
BJS61-3	1SNA168482R2400	144
BJS61-4	1SNA168483R2500	144
BJS61-5	1SNA168484R2600	144
BJS6-20	1SNA174784R2000	111
BNC62	1SNA196853R1400	115
BNCT82	1SNA196926R0500	116
BNF52	1SNA196924R0300	116
BNF652	1SNA196998R1600	115
BNSTP1	1SNA196792R1700	214
BNSV62	1SNA196854R1500	115
BNSV62-1	1SNA400142R0400	115
BNSV82	1SNA196927R0600	116
CBM5	1SNA178745R1400	110
CBM8	1SNA178746R1500	110
CDK2.5	1SNK805712R0000	80
CDK2.5-2P-J	1SNK805740R0000	95
CDK2.5-2P-J-BL	1SNK805746R0000	95
CDK2.5-2P-J-BL-E	1SNK805747R0000	95
CDK2.5-2P-J-E	1SNK805741R0000	95
CDK2.5-2P-J-PE	1SNK805751R0000	95
CDK2.5-2P-J-PE-E	1SNK805752R0000	95
CDK2.5-BL	1SNK805742R0000	83
CDK2.5-BL-E	1SNK805743R0000	83
CDK2.5-E	1SNK805713R0000	80
CDK2.5-J	1SNK805738R0000	94
CDK2.5-J-BL	1SNK805744R0000	94
CDK2.5-J-BL-E	1SNK805745R0000	94
CDK2.5-J-E	1SNK805739R0000	94
CDK2.5-J-PE	1SNK805748R0000	94
CDK2.5-J-PE-E	1SNK805749R0000	94
CDK2.5-PE	1SNK805750R0000	82
CDK2.5-PE-E	1SNK805753R0000	82
CDK4	1SNK806712R0000	86
CDK4-E	1SNK806713R0000	86
CDS4	1SNK805714R0000	98
CDS4-E	1SNK805715R0000	98
CDS4-R1	1SNK806714R0000	100
CN5	1SNA179371R1600	268
CO	1SNK900604R0000	303
COCE	1SNA199321R2100	119
COCF	1SNA199320R0400	128
COP-ZD	1SNK900636R0000	80
CPBP1	1SNA399788R1600	239
CPBP2	1SNA399787R0500	240
CPM	1SNA187312R1400	153
	1SNA197312R1600	153
CPUF120	1SNA190018R2000	198
CPUF185	1SNA190019R2100	199
CPUF35	1SNA190016R1600	196
CPUF70	1SNA190017R1700	197
CS	1SNK900101R0000	228
CS-R1	1SNK900103R0000	228
CS-R2	1SNK900106R0000	19
CS-R3	1SNK900107R0000	28
CS-RGW-L	1SNA519201R0000	203
CS-RGW-S	1SNA519200R0000	201
D1.5/5.ADO.NF	1SNA400315R0100	110
D1.5/6.ADO.D2.NF	1SNA399916R2600	118
D1.5/6.ADO.NF	1SNA399730R1700	111
D1.5/6.D2.ADO.NF	1SNA399742R1700	117
D1.5/6.S.ADO.NF	1SNA400083R2500	115
D1.5/7.2ADO-CPE.NF	1SNA400154R0000	121
D1.5/7.ADO-CPE.NF	1SNA400153R0700	119
D120/42.FF	1SNA190003R2200	198
D185/55.FF	1SNA190004R2300	199
D2.5/7.2ADO-CPE.NF	1SNA400062R0700	123
D2.5/7.2CPE	1SNA400703R1700	126
D2.5/7.ADO-CPE.NF	1SNA400061R0600	122
D2.5/7.ADO-CPE.NF1	1SNA400156R0200	120
D2.5/7.CPE.CPE	1SNA400704R1000	127
D2.5/8.ADO.NF	1SNA399736R0100	112
D2.5/8.ADO.NF1	1SNA399749R2600	113
D2.5/8.S.ADO.NF	1SNA399752R1100	116
D300/55.FF	1SNA190005R2400	200
D35/27.FF	1SNA190001R2000	196
D4/7.2ADO-CPE.NF	1SNA400241R1700	125
D4/7.ADO-CPE.NF	1SNA400240R2200	124
D4/8.ADO.NF	1SNA399748R2500	114
D70/32.FF	1SNA190002R2100	197
DRF10	1SNA205769R2000	198
DRF12	1SNA205770R2500	199
DRF16	1SNA205771R1200	200
DRF6	1SNA205767R1600	196
DRF8	1SNA205768R2700	197
E10/16	1SNA191302R2700	213
E10/16.S	1SNA191296R1100	216
E4/6	1SNA190468R0000	211
E6/8	1SNA190607R0400	212
ED2.5-22	1SNK805917R0000	81
EDK2.5-11	1SNK805915R0000	80
EDK2.5-21	1SNK805914R0000	84
EDK2.5-22	1SNK805910R0000	85
EDK2.5-D	1SNK805913R0000	89
EDS4-22	1SNK805911R0000	98
EIP	1SNA290454R0600	119
EK10	1SNK710910R0000	27
EK10-3P	1SNK710911R0000	29
EK2.5	1SNK705910R0000	19
EK2.5-3P	1SNK705911R0000	20
EK2.5-4P	1SNK705912R0000	21
EK2.5-D2	1SNK705960R0000	54
EK2.5-S-4P	1SNK705913R0000	48
EK2.5-T3	1SNK705961R0000	58
EK6-3P	1SNK708911R0000	26
EL6	1SNA173627R2100	111
EPR1	1SNA178431R2200	316
EPR2	1SNA399726R0700	316
E-RGW2.5	1SNA519003R0000	201
E-RGW25	1SNA519005R0000	203
E-RGW6	1SNA519004R0000	202
ES10-ST	1SNK508910R0000	300
ES4	1SNK505910R0000	228
ES4-D2	1SNK505960R0000	284
ES4-D2-SF1	1SNK508911R0000	292
ES4-SF	1SNK508960R0000	268
ES4-T3	1SNK505961R0000	294
ES6-3S	1SNK505912R0000	230
ES6-4S	1SNK505911R0000	231
ES8-CG	1SNA400014R2700	215
	1SNA400015R2000	215
ES-TC6	1SNK900105R0000	22
ES-TC8	1SNK900104R0000	25
EXBN2	1SNA171018R2000	115
FC2	1SNA007865R2600	110
FC4	1SNA167860R0100	112
FECPE	1SNA400708R2400	126
FECPE.2ADO	1SNA400018R0300	121
FECPE.ADO	1SNA400019R0400	119
FED2AD2	1SNA399803R0600	117
FEDAD5	1SNA399804R0700	115
FEE10-16	1SNA193449R2400	213
FEE6-1	1SNA193080R1200	211
FEE8-2	1SNA193085R0300	212
FEH3	1SNA198352R0700	144
FEH4	1SNA193878R2200	146
FEH8	1SNA198729R0100	158
FEH9	1SNA198549R0500	155
FEHD1	1SNA199400R0600	147
FEHD2	1SNA168949R1700	162
FEMAD3	1SNA399802R0500	110
FEMT1	1SNA193137R0300	214
FESDH	1SNA400799R0000	159
FIC F.ADO.T1.10P.NF	1SSS266210R8800	128
FIC F.ADO.T1.2P.NF	1SSS266202R8800	128
FIC F.ADO.T1.3P.NF	1SSS266203R8800	128
FIC F.ADO.T1.4P.NF	1SSS266204R8800	128

Index
Type classification

Type	Part Number	Page
FIC F.ADO.T1.5P.NF	1SSS266205R8800	128
FIC F.ADO.T1.6P.NF	1SSS266206R8800	128
FIC F.ADO.T1.7P.NF	1SSS266207R8800	128
FIC F.ADO.T1.8P.NF	1SSS266208R8800	128
FIC F.ADO.T1.9P.NF	1SSS266209R8800	128
FIC F.ADO.T1.B.10P.NF	1SSS266210R9800	129
FIC F.ADO.T1.B.2P.NF	1SSS266202R9800	129
FIC F.ADO.T1.B.3P.NF	1SSS266203R9800	129
FIC F.ADO.T1.B.4P.NF	1SSS266204R9800	129
FIC F.ADO.T1.B.5P.NF	1SSS266205R9800	129
FIC F.ADO.T1.B.6P.NF	1SSS266206R9800	129
FIC F.ADO.T1.B.8P.NF	1SSS266208R9800	129
FIC F.ADO.T2.10P.NF	1SSS267210R8800	131
FIC F.ADO.T2.2P.NF	1SSS267202R8800	131
FIC F.ADO.T2.3P.NF	1SSS267203R8800	131
FIC F.ADO.T2.4P.NF	1SSS267204R8800	131
FIC F.ADO.T2.5P.NF	1SSS267205R8800	131
FIC F.ADO.T2.6P.NF	1SSS267206R8800	131
FIC F.ADO.T2.7P.NF	1SSS267207R8800	131
FIC F.ADO.T2.8P.NF	1SSS267208R8800	131
FIC F.ADO.T2.B.10P.NF	1SSS267210R9800	132
FIC F.ADO.T2.B.16P.NF	1SSS267216R9800	132
FIC F.ADO.T2.B.2P.NF	1SSS267202R9800	132
FIC F.ADO.T2.B.3P.NF	1SSS267203R9800	132
FIC F.ADO.T2.B.4P.NF	1SSS267204R9800	132
FIC F.ADO.T2.B.5P.NF	1SSS267205R9800	132
FIC F.ADO.T2.B.6P.NF	1SSS267206R9800	132
FIC F.ADO.T2.B.8P.NF	1SSS267208R9800	132
FIC F.ADO.T3-.2P.NF	1SSS277202R8800	130
FIC F.ADO.T3-.3P.NF	1SSS277203R8800	130
FIC F.ADO.T3.4P.NF	1SSS276204R8800	133
FIC F.ADO.T3-.4P.NF	1SSS277204R8800	130
FIC F.ADO.T3.5P.NF	1SSS276205R8800	133
FIC F.ADO.T3-.5P.NF	1SSS277205R8800	130
FIC F.ADO.T3-.6P.NF	1SSS277206R8800	130
FIC M.ADO.T1.FI.10P.NF	1SSS366210R4100	134
FIC M.ADO.T1.FI.2P.NF	1SSS366202R4100	134
FIC M.ADO.T1.FI.3P.NF	1SSS366203R4100	134
FIC M.ADO.T1.FI.4P.NF	1SSS366204R4100	134
FIC M.ADO.T1.FI.5P.NF	1SSS366205R4100	134
FIC M.ADO.T1.FI.6P.NF	1SSS366206R4100	134
FIC M.ADO.T1.FI.8P.NF	1SSS366208R4100	134
FIC M.ADO.T2.FI.10P.NF	1SSS367210R4100	135
FIC M.ADO.T2.FI.2P.NF	1SSS367202R4100	135
FIC M.ADO.T2.FI.3P.NF	1SSS367203R4100	135
FIC M.ADO.T2.FI.4P.NF	1SSS367204R4100	135
FIC M.ADO.T2.FI.5P.NF	1SSS367205R4100	135
FIC M.ADO.T2.FI.6P.NF	1SSS367206R4100	135
FIC M.ADO.T2.FI.8P.NF	1SSS367208R4100	135
FJDHD	1SNA295426R1300	178
FJH501	1SNA199411R1400	153
FJHD32	1SNA205431R2600	177
	1SNA295431R1000	176
FJHD40	1SNA205424R2700	181
	1SNA295424R1100	178
FJHD50	1SNA295425R1200	191
HD10/12.F5	1SNA295394R2300	180
HD10/12.F5.1	1SNA295395R2400	181
HD10/12.F5.2	1SNA205396R0300	181
	1SNA295396R2500	181
HD10/12.F5.3	1SNA295011R1600	179
HD10/12.FF5	1SNA295397R2600	191
HD120/30.F10.31	1SNA295448R0100	186
HD120/30.F10.31.1	1SNA295403R2500	187
HD16/14.FF5.20	1SNA162979R0700	195
HD16/14.FF5.20.3	1SNA295013R1000	193
HD16/14.FF5.21	1SNA162991R1400	194
HD16/14.FF5.21.3	1SNA295012R1700	192
HD185/36.F12.31.1	1SNA295405R2700	188
HD2.5/6.2G.2G.1	1SNA160487R2500	144
HD2.5/6.3.2G.2G.1	1SNA190305R0500	166
HD2.5/6.3.2G.2G.1.GG	1SNA190312R2300	163
HD2.5/6.3.3G.3G.1	1SNA190316R2700	162
HD2.5/6.3.GG.1.2GG	1SNA199025R1400	165
HD2.5/6.3.GG1.2G.2G	1SNA190314R2500	164
HD2.5/6.3.GH.2G.H	1SNA199096R1400	167
HD35/16.F6.19	1SNA295398R0700	182
HD35/16.F6.19.1	1SNA295399R0000	183
HD4/10.F4.19	1SNA295298R0300	178
HD4/9.F4	1SNA295391R2000	176
HD4/9.F4.2	1SNA205392R0700	177
	1SNA295392R2100	177
HD4/9.FF4	1SNA295393R2200	189
HD6/13.FF4	1SNA295014R1100	190
HD6/14.DG	1SNA162309R1000	158
HD6/14.DH	1SNA162971R2700	157
HD6/14.SDH	1SNA162972R2000	161
HD6/14.SDH.1	1SNA162988R2100	160
HD6/14.SF.2G.2G	1SNA162315R2500	155
HD6/22.F12G	1SNA400782R0000	153
HD6/24.DH	1SNA399963R0500	156
	1SNA399964R0600	156
HD6/30.F12G	1SNA295015R1200	154
HD6/7.2G.3G	1SNA400768R2700	149
HD6/7.3G.2G	1SNA400767R1600	148
HD6/7.5G	1SNA400766R1500	147
HD6/8.2G.2G.1	1SNA160606R1400	145
HD6/8.2G.2G.2	1SNA160619R1000	146
HD6/9.2G.3G	1SNA160564R0100	152
HD6/9.3G.2G	1SNA160563R0000	151
HD6/9.5G	1SNA160621R0200	150
HD6/9.SDH.1	1SNA400800R0000	159
HD70/22.F8.31	1SNA295400R0600	184
HD70/22.F8.31.1	1SNA295401R2300	185
HD70/22.F8.31.2	1SNA295402R2400	185
INH3	1SNA199394R2300	192
INHD1	1SNA205427R2200	177
	1SNA295427R1400	176
JB10-10	1SNK910310R0000	27
JB10-2	1SNK910302R0000	27
JB10-3	1SNK910303R0000	27
JB10-4	1SNK910304R0000	27
JB10-5	1SNK910305R0000	27
JB12-2	1SNK912302R0000	28
JB12-3	1SNK912303R0000	28
JB12-5	1SNK912305R0000	28
JB16-10	1SNK916310R0000	235
JB16-2	1SNK916302R0000	235
JB16-3	1SNK916303R0000	235
JB16-4	1SNK916304R0000	235
JB16-5	1SNK916305R0000	235
JB22-10	1SNK922310R0000	237
JB22-2	1SNK922302R0000	237
JB22-3	1SNK922303R0000	237
JB22-5	1SNK922305R0000	237
JB26-10	1SNK926310R0000	238
JB26-2	1SNK926302R0000	238
JB26-3	1SNK926303R0000	238
JB26-5	1SNK926305R0000	238
JB5-10	1SNK905310R0000	19
JB5-2	1SNK905302R0000	19
JB5-3	1SNK905303R0000	19
JB5-4	1SNK905304R0000	19
JB5-5	1SNK905305R0000	19
JB5-50	1SNK905350R0000	19
JB6-10	1SNK906310R0000	22
JB6-2	1SNK906302R0000	22
JB6-3	1SNK906303R0000	22
JB6-4	1SNK906304R0000	22
JB6-5	1SNK906305R0000	22
JB6-50	1SNK906350R0000	22
JB8-10	1SNK908310R0000	25
JB8-10-R1	1SNK908910R0000	302
JB8-2	1SNK908302R0000	25
JB8-2-R1	1SNK908902R0000	302
JB8-3	1SNK908303R0000	25
JB8-3-R1	1SNK908903R0000	302
JB8-4	1SNK908304R0000	25
JB8-4-R1	1SNK908904R0000	302
JB8-5	1SNK908305R0000	25
JB85-3	1SNK900603R0000	19
JB8-5-R1	1SNK908905R0000	302
KCO	1SNK900624R0000	303
LH	1SNK900605R0000	314
LH-J	1SNK900606R0000	54
LH-R1	1SNK900607R0000	314
M6/8.STP	1SNA195212R1000	214
MC512	1SNK140000R0000	19
MC512PA	1SNK149999R0000	19
MC612	1SNK150000R0000	22
MC612PA	1SNK159999R0000	22
MC812	1SNK160000R0000	28
MC812PA	1SNK169999R0000	28
MCLH	1SNK900630R0000	316
MCLH-R1	1SNK900631R0000	316
MCLH-R1-YL	1SNK900634R0000	316
MCLH-YL	1SNK900633R0000	316
MG-CPM 13 41790	1SNB041790R0512	19
MG-CPM 13 41791	1SNB041791R0612	28
MG-CPM-01 41090	1SNB041090R0510	201
MG-CPM-01 41096	1SNB041096R0810	202
MG-CPMFA 43196	1SNB043196R0012	93
MG-TAA 49148	1SNB049148R1735	316
MG-TAA 49198	1SNB049198R1735	316
MG-TAA 49448	1SNB049448R8530	316
MG-TAA 49498	1SNB049498R8530	316
MG-TAR 45194	1SNB045194R1735	316
MG-TAR 45490	1SNB045490R8530	316
MG-VYT 46415	1SNB046415R0615	332
MG-VYT 46915	1SNB046915R0615	332
M-W1010PC	1SNA235512R1000	203
M-W610PC	1SNA235511R0600	201
M-W810PC	1SNA235510R0800	202
OUMAD	1SNA179466R0600	110
OUPAD	1SNA178944R0400	110
PAM43020	1SNA235106R2600	345
PC	1SNA168497R2300	213
PC5-10	1SNA113544R1200	253
PC5-2	1SNA113542R1000	253
PC8-10	1SNA163313R2400	303
PC81-10	1SNA173523R1100	268
PC8-2	1SNA116538R1700	341
PC8-3	1SNA116539R1000	341
PC8-4	1SNA116540R2500	341
PC8-R1	1SNA400711R0600	301
PC8-R2	1SNA400712R0700	303
PC8-R3	1SNA400713R0000	303
PC8-R4	1SNA400724R0300	303
PC8-R5	1SNA400842R0000	303
PC8-R6	1SNA400843R0000	303
PC8-R7	1SNA400849R0000	303
PC8-R8	1SNA400850R0000	303
PC-RG2.5-10	1SNA519103R1000	201
PC-RG2.5-2	1SNA519103R0200	201
PC-RG2.5-3	1SNA519103R0300	201
PC-RG2.5-4	1SNA519103R0400	201
PC-RG25-2	1SNA519106R0200	203
PC-RG6-10	1SNA519104R1000	202
PC-RG6-2	1SNA519104R0200	202
PC-RG6-3	1SNA519104R0300	202
PC-RG6-4	1SNA519104R0400	202
PC-RG6-7	1SNA519104R0700	202
PE	1SNA103007R2300	211
PEFH	1SNA163497R1600	153
PG5	1SNK900401R0000	50
PG5-R1	1SNK900402R0000	50
PG5-R2	1SNK900403R0000	326
PIB2-TT	1SNA235155R2600	316
PIB2-TT-YL	1SNA235157R2000	316
PL10	1SNK900621R0000	233
PL16	1SNK900622R0000	235
PL5	1SNK900618R0000	228
PL6	1SNK900619R0000	229
PL8	1SNK900620R0000	232
PR3.G2	1SNA164800R0300	311
PR3.Z2	1SNA174300R1700	310
PR30	1SNA173220R0500	310
PR4	1SNA168500R1200	312
PR5	1SNA168700R2200	312
PR50	1SNA178529R0400	311
PRH2R	1SNA163350R1500	313

Index
Type classification

Type	Part Number	Page
PS-3	1SNK900650R0000	328
PT1	1SSS299253R2800	128
PT2	1SSS299254R2800	128
PT-3	1SNK900625R0000	325
PT-ZD	1SNK900660R0000	93
RB-12W7	1SNA290455R0700	119
RC1010	1SNA238000R1600	239
RC510	1SNA231000R0700	110
RC55	1SNA230000R1200	110
RC610	1SNA233000R0100	111
RC65	1SNA232000R0000	111
RC810	1SNA234000R0200	112
RCPEAD-TT	1SNA235158R0100	316
RCPEAD-TT-YL	1SNA235159R0200	316
RCPEB	1SNA178430R0500	316
RDJ6	1SNA173241R0600	144
REH3	1SNA163155R2600	190
RGW2.5-PE-V0	1SNA511003R0500	201
RGW2.5-V0	1SNA510003R0000	201
RGW25-M5-V0	1SNA510005R0000	203
RGW25-M6-V0	1SNA510006R0000	204
RGW6-PE-V0	1SNA511024R0500	202
RGW6-V0	1SNA510024R0000	202
RILS	1SNK900627R0000	334
RPED	1SNA163518R2200	153
RTC	1SNA163156R2700	153
SCAD	1SNA196896R0000	111
SCAD5	1SNA199551R2000	110
SCH3	1SNA198692R2500	144
SCH6	1SNA199393R2200	192
SCH8	1SNA199412R1500	153
SCHD1	1SNA205428R0300	177
	1SNA295428R2500	176
SCHD2	1SNA205429R0400	181
	1SNA295429R2600	178
SCHD5	1SNA295430R2300	191
SC-JB8-2	1SNK900652R0000	300
SC-JB8-3	1SNK900653R0000	304
SC-JB8-3-OR	1SNK900657R0000	346
SC-JB8-4	1SNK900654R0000	304
SC-JB8-4-OR	1SNK900658R0000	346
SC-JB8-5	1SNK900655R0000	346
SHB	1SNK900602R0000	54
SHBP	1SNK900601R0000	19
SHBS	1SNK900600R0000	228
SSB20	1SNA103098R2600	216
SSB20T	1SNA103099R2700	216
TC5	1SNK900200R0000	19
TC5-R1	1SNK900201R0000	19
TGA8	1SNA168672R1100	268
	1SNA168673R1200	268
	1SNA168674R1300	268
TO3.5-100-INS	1SNK900644R0000	328
TO3.5-50	1SNK900640R0000	328
TO3.5-50-A	1SNK900659R0000	328
TO4-100	1SNK900641R0000	328
TO5.5-125	1SNK900642R0000	328
TO6.5-150	1SNK900643R0000	328
TP2	1SNK900203R0000	28
TP4	1SNK900205R0000	28
UMH	1SNK900611R0000	28
VRADO.CPE7	1SNA400063R0000	119
VR-ZD	1SNK900637R0000	93
VSJ6	1SNA167735R2700	144
ZD2.5-11	1SNK805016R0000	80
ZD2.5-22	1SNK805017R0000	81
ZD2.5-22-PE	1SNK805156R0000	82
ZDK2.5-11	1SNK805015R0000	83
ZDK2.5-11-BL	1SNK805025R0000	83
ZDK2.5-11-PE	1SNK805150R0000	87
ZDK2.5-21	1SNK805014R0000	84
ZDK2.5-22	1SNK805010R0000	85
ZDK2.5-22-BL	1SNK805020R0000	85
ZDK2.5-22-PE	1SNK805152R0000	88
ZDK2.5-D1	1SNK805214R0000	90
ZDK2.5-D1-PE	1SNK805250R0000	92
ZDK2.5-D2	1SNK805213R0000	89
ZDK2.5-D2-BL	1SNK805223R0000	89
ZDK2.5-D2-PE	1SNK805212R0000	91
ZDK4-22	1SNK806010R0000	86
ZDS4-22	1SNK805013R0000	98
ZDS4-22-R1	1SNK806013R0000	100
ZK10	1SNK710010R0000	27
ZK10-3P	1SNK710011R0000	29
ZK10-3P-BL	1SNK710021R0000	29
ZK10-3P-PV	1SNK710064R0000	30
ZK10-3P-PV-BL	1SNK710067R0000	30
ZK10-BL	1SNK710020R0000	27
ZK10-OR	1SNK710030R0000	27
ZK10-PE	1SNK710150R0000	28
ZK10-PE-3P	1SNK710151R0000	30
ZK10-PV	1SNK710063R0000	28
ZK10-PV-BL	1SNK710065R0000	28
ZK16	1SNK712010R0000	31
ZK16-3P	1SNK712011R0000	33
ZK16-3P-BL	1SNK712021R0000	33
ZK16-3P-PV	1SNK712064R0000	34
ZK16-3P-PV-BL	1SNK712067R0000	34
ZK16-BL	1SNK712020R0000	31
ZK16-PE	1SNK712150R0000	32
ZK16-PE-3P	1SNK712151R0000	34
ZK16-PV	1SNK712063R0000	32
ZK16-PV-BL	1SNK712065R0000	32
ZK2.5	1SNK705010R0000	19
ZK2.5-3P	1SNK705011R0000	20
ZK2.5-3P-BK	1SNK705073R0000	20
ZK2.5-3P-BL	1SNK705021R0000	20
ZK2.5-3P-GN	1SNK705068R0000	20
ZK2.5-3P-OR	1SNK705031R0000	20
ZK2.5-3P-RD	1SNK705069R0000	20
ZK2.5-3P-WH	1SNK705072R0000	20
ZK2.5-3P-YL	1SNK705067R0000	20
ZK2.5-4P	1SNK705012R0000	21
ZK2.5-4P-BK	1SNK705080R0000	21
ZK2.5-4P-BL	1SNK705022R0000	21
ZK2.5-4P-GN	1SNK705075R0000	21
ZK2.5-4P-OR	1SNK705032R0000	21
ZK2.5-4P-RD	1SNK705076R0000	21
ZK2.5-4P-WH	1SNK705079R0000	21
ZK2.5-4P-YL	1SNK705074R0000	21
ZK2.5-BK	1SNK705066R0000	19
ZK2.5-BL	1SNK705020R0000	19
ZK2.5-CH-4P-LR	1SNK705710R0000	63
ZK2.5-CH-4P-RL	1SNK705711R0000	64
ZK2.5-D1	1SNK705211R0000	55
ZK2.5-D1-PE	1SNK705250R0000	54
ZK2.5-D2	1SNK705210R0000	54
ZK2.5-D2-BL	1SNK705220R0000	54
ZK2.5-D2-PE	1SNK705212R0000	56
ZK2.5-D-CH2-DU-RL	1SNK705219R0000	67
ZK2.5-D-CH-DU	1SNK705214R0000	66
ZK2.5-D-CH-UD	1SNK705213R0000	65
ZK2.5-GN	1SNK705061R0000	19
ZK2.5-L-L-PE	1SNK705512R0000	60
ZK2.5-L-N-PE	1SNK705513R0000	61
ZK2.5-OR	1SNK705030R0000	19
ZK2.5-PE	1SNK705150R0000	19
ZK2.5-PE-3P	1SNK705151R0000	20
ZK2.5-PE-4P	1SNK705152R0000	21
ZK2.5-RD	1SNK705062R0000	19
ZK2.5-S	1SNK705310R0000	47
ZK2.5-S-4P	1SNK705312R0000	48
ZK2.5-S-4P-BL	1SNK705321R0000	48
ZK2.5-S-4P-OR	1SNK705331R0000	48
ZK2.5-S-BL	1SNK705320R0000	47
ZK2.5-SF	1SNK706410R0000	49
ZK2.5-SF-R1	1SNK706411R0000	53
ZK2.5-SF-R3	1SNK706412R0000	53
ZK2.5-S-OR	1SNK705330R0000	47
ZK2.5-SP	1SNK705311R0000	50
ZK2.5-SP-4P	1SNK705313R0000	51
ZK2.5-S-R1	1SNK706310R0000	49
ZK2.5-T1	1SNK705511R0000	59
ZK2.5-T1-PE	1SNK705550R0000	58
ZK2.5-T3	1SNK705510R0000	58
ZK2.5-WH	1SNK705065R0000	19
ZK2.5-YL	1SNK705060R0000	19
ZK4	1SNK706010R0000	22
ZK4-3P	1SNK706011R0000	23
ZK4-3P-BL	1SNK706021R0000	23
ZK4-3P-OR	1SNK706031R0000	23
ZK4-4P	1SNK706012R0000	24
ZK4-4P-BL	1SNK706022R0000	24
ZK4-4P-OR	1SNK706032R0000	24
ZK4-BK	1SNK706066R0000	22
ZK4-BL	1SNK706020R0000	22
ZK4-OR	1SNK706030R0000	22
ZK4-PE	1SNK706150R0000	22
ZK4-PE-3P	1SNK706151R0000	23
ZK4-PE-4P	1SNK706152R0000	24
ZK4-RD	1SNK706062R0000	22
ZK4-YL	1SNK706060R0000	22
ZK6	1SNK708010R0000	25
ZK6-3P	1SNK708011R0000	26
ZK6-3P-BL	1SNK708021R0000	26
ZK6-3P-OR	1SNK708031R0000	26
ZK6-BK	1SNK708066R0000	25
ZK6-BL	1SNK708020R0000	25
ZK6-OR	1SNK708030R0000	25
ZK6-PE	1SNK708150R0000	25
ZK6-PE-3P	1SNK708151R0000	26
ZK6-RD	1SNK708062R0000	25
ZK6-YL	1SNK708060R0000	25
ZS10	1SNK508010R0000	232
ZS10-BK	1SNK508066R0000	232
ZS10-BL	1SNK508020R0000	232
ZS10-BR	1SNK508064R0000	232
ZS10-GN	1SNK508061R0000	232
ZS10-OR	1SNK508030R0000	232
ZS10-PE	1SNK508150R0000	232
ZS10-PE-R1	1SNK508151R0000	301
ZS10-PR	1SNK508063R0000	232
ZS10-R1	1SNK508011R0000	300
ZS10-RD	1SNK508062R0000	232
ZS10-S	1SNK508315R0000	259
ZS10-S-BL	1SNK508320R0000	259
ZS10-SF	1SNK508418R0000	281
ZS10-SF-R1	1SNK508421R0000	282
ZS10-SF-R3	1SNK508422R0000	282
ZS10-SP	1SNK508316R0000	264
ZS10-S-R2	1SNK508417R0000	283
ZS10-ST	1SNK508310R0000	302
ZS10-ST-1	1SNK508312R0000	300
ZS10-ST-T4	1SNK508311R0000	300
ZS10-WH	1SNK508065R0000	232
ZS10-YL	1SNK508060R0000	232
ZS150	1SNK531010R0000	239
ZS150-BL	1SNK531020R0000	239
ZS150-YL	1SNK531060R0000	239
ZS16	1SNK510010R0000	233
ZS16-BL	1SNK510020R0000	233
ZS16-OR	1SNK510030R0000	233
ZS16-PE	1SNK510150R0000	233
ZS240	1SNK536010R0000	240
ZS240-BL	1SNK536020R0000	240
ZS240-YL	1SNK536060R0000	240
ZS25	1SNK512010R0000	234
ZS25-BL	1SNK512020R0000	234
ZS25-PE	1SNK512150R0000	234
ZS25-YL	1SNK512060R0000	234
ZS35	1SNK516010R0000	235
ZS35-BL	1SNK516020R0000	235
ZS35-OR	1SNK516030R0000	235
ZS35-PE	1SNK516150R0000	235
ZS35-PEN	1SNK516170R0000	249
ZS4	1SNK505010R0000	228
ZS4-BK	1SNK505066R0000	228
ZS4-BL	1SNK505020R0000	228
ZS4-BR	1SNK505064R0000	228
ZS4-D1	1SNK505211R0000	285
ZS4-D2	1SNK505210R0000	284

Index
Type classification

Type	Part Number	Page
ZS4-D2-BL	1SNK505220R0000	284
ZS4-D2-OR	1SNK505230R0000	284
ZS4-D2-S	1SNK505315R0000	290
ZS4-D2-SF1	1SNK508425R0000	292
ZS4-D2-SF1-R1	1SNK508423R0000	293
ZS4-D2-SF1-R3	1SNK508424R0000	293
ZS4-D2-S-T2	1SNK505316R0000	291
ZS4-D-CH-DU	1SNK505215R0000	297
ZS4-D-CH-UD	1SNK505214R0000	296
ZS4-GN	1SNK505061R0000	228
ZS4-OR	1SNK505030R0000	228
ZS4-PE	1SNK505150R0000	228
ZS4-PE-R2	1SNK506153R0000	279
ZS4-PR	1SNK505063R0000	228
ZS4-R1	1SNK508013R0000	272
ZS4-R2	1SNK506013R0000	278
ZS4-RD	1SNK505062R0000	228
ZS4-S	1SNK505310R0000	253
ZS4-S-BL	1SNK505320R0000	253
ZS4-SF	1SNK506410R0000	274
ZS4-SF1	1SNK508410R0000	268
ZS4-SF1-OR	1SNK508430R0000	268
ZS4-SF1-R1	1SNK508412R0000	270
ZS4-SF1-R2	1SNK508413R0000	271
ZS4-SF1-R3	1SNK508414R0000	270
ZS4-SF1-R4	1SNK508415R0000	271
ZS4-SF1-T2	1SNK508411R0000	269
ZS4-SF-R1	1SNK506412R0000	276
ZS4-SF-R2	1SNK506413R0000	277
ZS4-SF-R3	1SNK506415R0000	276
ZS4-SF-R4	1SNK506416R0000	277
ZS4-SF-T2	1SNK506411R0000	275
ZS4-S-OR	1SNK505330R0000	253
ZS4-SP	1SNK505313R0000	260
ZS4-SP-R1	1SNK506313R0000	262
ZS4-SP-T2	1SNK505314R0000	261
ZS4-SP-T2-R1	1SNK506314R0000	263
ZS4-S-R1	1SNK506310R0000	255
ZS4-S-R1-BL	1SNK506320R0000	255
ZS4-S-R1-OR	1SNK506330R0000	255
ZS4-S-R2	1SNK506414R0000	280
ZS4-S-R3	1SNK508416R0000	273
ZS4-S-R3-T2	1SNK508419R0000	273
ZS4-S-T2	1SNK505311R0000	254
ZS4-S-T2.3	1SNK505312R0000	254
ZS4-S-T2.3-R1	1SNK506312R0000	256
ZS4-S-T2-BL	1SNK505321R0000	254
ZS4-S-T2-OR	1SNK505331R0000	254
ZS4-S-T2-R1	1SNK506311R0000	256
ZS4-S-T2-R1-BL	1SNK506321R0000	256
ZS4-S-T2-R1-OR	1SNK506331R0000	256
ZS4-T3	1SNK505212R0000	294
ZS4-T3-R1	1SNK506213R0000	295
ZS4-WH	1SNK505065R0000	228
ZS4-YL	1SNK505060R0000	228
ZS50	1SNK516011R0000	236
ZS50-BK	1SNK516064R0000	236
ZS50-BL	1SNK516021R0000	236
ZS50-PE	1SNK516151R0000	236
ZS50-RD	1SNK516063R0000	236
ZS50-YL	1SNK516060R0000	236
ZS6	1SNK506010R0000	229
ZS6-3S	1SNK506011R0000	230
ZS6-3S-BL	1SNK506021R0000	230
ZS6-3S-PE	1SNK506151R0000	230
ZS6-3S-YL	1SNK506067R0000	230
ZS6-4S	1SNK506012R0000	231
ZS6-4S-BL	1SNK506022R0000	231
ZS6-4S-PE	1SNK506152R0000	231
ZS6-4S-YL	1SNK506068R0000	231
ZS6-BK	1SNK506066R0000	229
ZS6-BL	1SNK506020R0000	229
ZS6-BR	1SNK506064R0000	229
ZS6-D1	1SNK506211R0000	287
ZS6-D1-PE	1SNK506250R0000	286
ZS6-D1-RD	1SNK506214R0000	287
ZS6-D2	1SNK506210R0000	286
ZS6-D2-BK	1SNK506266R0000	286
ZS6-D2-BL	1SNK506220R0000	286
ZS6-D2-OR	1SNK506230R0000	286
ZS6-D2-PE	1SNK506212R0000	288
ZS6-D2-RD	1SNK506262R0000	286
ZS6-D2-WH	1SNK506265R0000	286
ZS6-D2-YL	1SNK506260R0000	286
ZS6-GN	1SNK506061R0000	229
ZS6-OR	1SNK506030R0000	229
ZS6-PE	1SNK506150R0000	229
ZS6-PR	1SNK506063R0000	229
ZS6-RD	1SNK506062R0000	229
ZS6-S	1SNK506315R0000	257
ZS6-S-4S-T2	1SNK506316R0000	258
ZS6-S-BL	1SNK506322R0000	257
ZS6-WH	1SNK506065R0000	229
ZS6-YL	1SNK506060R0000	229
ZS70	1SNK522010R0000	237
ZS70-BL	1SNK522020R0000	237
ZS70-PE	1SNK522150R0000	237
ZS70-YL	1SNK522060R0000	237
ZS95	1SNK526010R0000	238
ZS95-BL	1SNK526020R0000	238
ZS95-PE	1SNK526150R0000	238
ZS95-YL	1SNK526060R0000	238

Notes

MARKING SOLUTIONS

Markers & marking systems

ENTRELEC Terminal Blocks

TE Connectivity proposes a large scope of solutions for all identification requirements within the electrical panel.
Identify all your equipment through our comprehensive range of markers, labels for terminal block, wire & cable, component & equipment...
Find your favorite marking solution from budget sensitive printing jobs to high quality & volume projects.

PB2

Marking solutions

Markers and marking systems

Overview 2

HTP500 thermal transfer printer and compatible markers 9

MG3 thermal transfer printer and compatible markers 37

AMS 600 and AMS 250 plotter and compatible markers 75

Pre-printed and customized markers 111

Other manufacturers' terminal block markers selection guides 158

Index 170

1-1773967-4_EN - Edition July 2019

TE Connectivity proposes one of the largest Din Rail Terminal block offering on the market with various technologies: screw, PI-Spring, spring, IDC, pluggable, stud, etc. found in over 8000 products & solutions.

	SNK terminal blocks		Dedicated applications terminal blocks		Terminal blocks for railway applications
			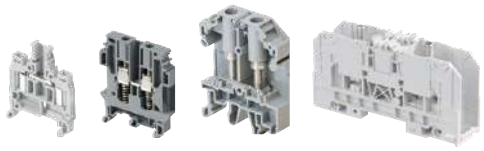		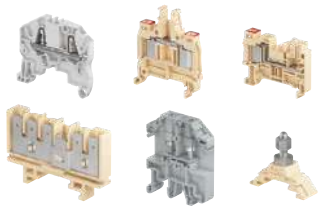
Scope	Qualified for worldwide applications and severe environments (such as hazardous locations, railways, marine and solar applications..). From 0.2 to 300 mm².		Specific terminal blocks and technologies for dedicated applications and markets.		The largest offering on the market for rolling stock and infrastructures.
Product families & functions	SNK PI-Spring technology 2.5 to 16 mm² 12 to 4 AWG	Feed-through Multi-deck Ground Disconnect for fuses Component holder	ADO System® (IDC) 0.22 to 4 mm² 24 to 12 AWG	ADO-ADO or ADO-screw clamp Feed-through / Multi-deck / Ground / Disconnect / for fuses / Component holder	SNK PI-Spring technology 2.5 to 16 mm² 12 to 4 AWG
			Safety (spring loaded) 0.22 to 10 mm² 24 to 6 AWG	Feed-through Disconnect Test & measurement	SNK pluggable screw & PI-Spring technologies 2.5 to 4 mm² 12 to 10 AWG
	SNK screw clamp technology 4 to 240 mm² 12 to 500 Kcmil	Feed-through Multi-deck Ground Disconnect for fuses Test & measurement Marshalling Component holder	Stud 25 to 300 mm² 4 AWG to 1000 Kcmil	One stud 2 studs One stud - One screw clamp	ADO System® (IDC) 1.5 to 4 mm² 16 to 12 AWG
			Ring lug 6 to 16 mm² 8 to 6 AWG	Feed-through Test & measurement	Stud 4 to 185 mm²
	SNK pluggable screw & PI-Spring technologies 2.5 to 4 mm² 12 to 10 AWG	Feed-through Multi-deck Ground	Miniblocks 1.5 to 6 mm² 18 to 8 AWG	Screw clamp Spring ADO System® (IDC)	Quick-connect 2.5 to 6 mm²
			Other types Test & measurement: with sliding link, blade, plug Pluggable: feed-through, double deck, disconnect Sensors/actuators: screw, spring, ADO system (IDC) Installation: screw, spring Protection: ground + neutral Component holders: screw, spring, ADO system (IDC)		

www.te.com

	DBL power distribution blocks	ESSAILEC® test blocks	Interfast PLC pre-wiring system	Marking solutions
	The preferred choice for primary power distribution and solar applications.	Test blocks for safe and easy testing on secondary circuits of current and voltage transformers and sensors.	PLC pre-wiring system for fast, flexible, reliable connection of PLC's in process automation applications.	Markers & marking systems for all identification requirements in electrical panels.
	From 80 A up to 550 A (IEC) Modular blocks: single pole, three & four poles, up to 12 outputs Terminal blocks types: 2 to 10 poles, up to 20 outputs	Current and voltage sockets & plugs Simultaneous testing of 1 to 4 independent circuits on the same socket Several testing principle such as "make before break" for safe current transformer testing Panel and switchboard mounting : base, flush, rack, TH35 rail Multicircuits sockets & plugs	Interfast PCB: Compact & standard modules Interfast MS: Modular system based on terminal block technology Functions: – 1 to 4 wire connections (sensors) – Disconnect – Fuse – Signal indication – Relays – Optocouplers – Solenoid valve control – Galvanic isolation (2.5 kV).	Terminal block identification and group markers Wire and cable identification Component and equipment identification Panel identification Pre-printed markers for terminal blocks

1SNC160261S0201

Marking solutions

Comprehensive range for all identification requirements

1

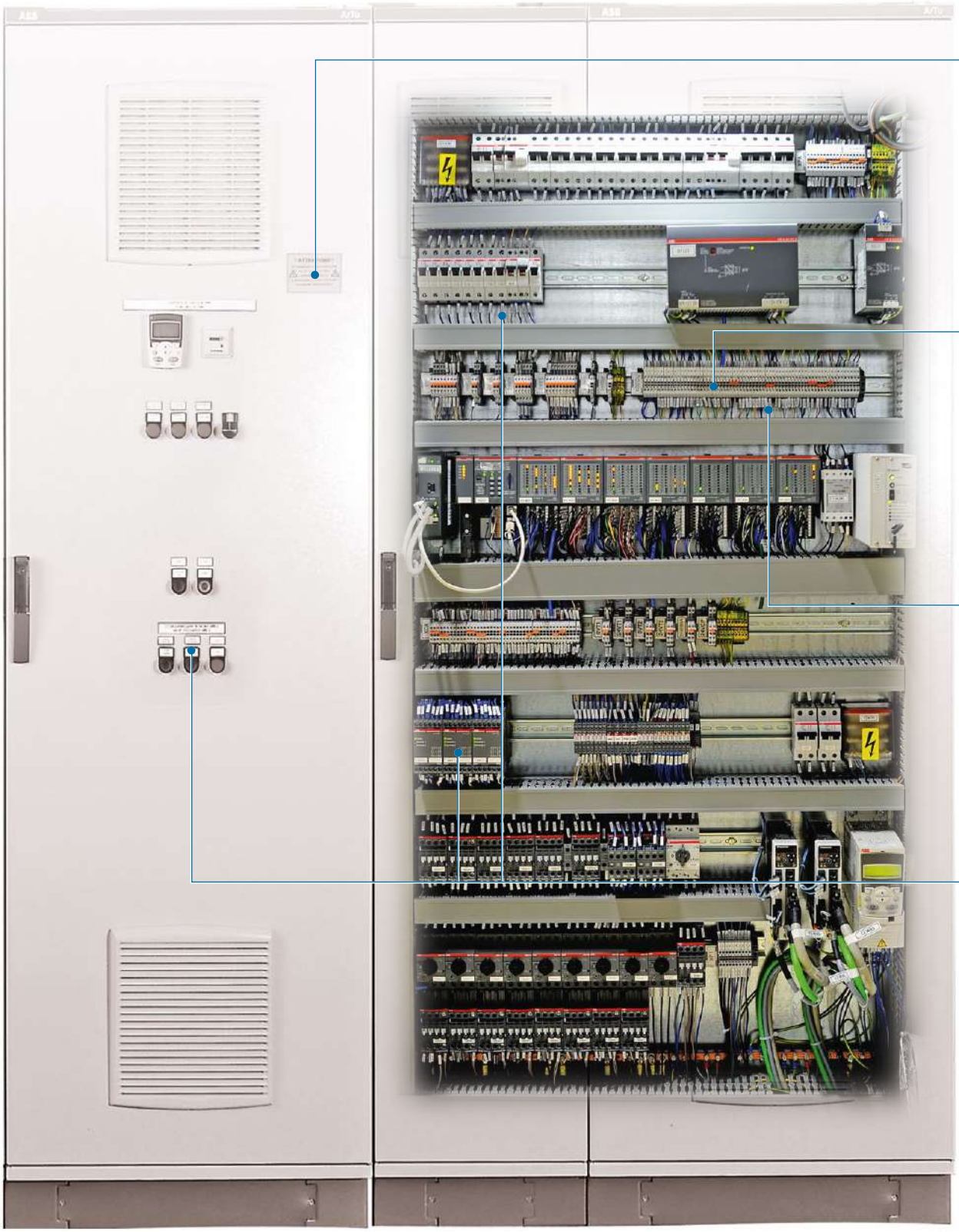

Panel identification

Terminal block identification and group markers

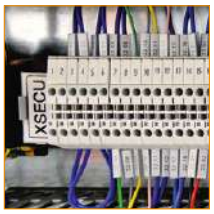

Wire and cable identification

Component and equipment identification

1SNC160206S0201

For versatile applications

Marking systems	MG3
Technology	Thermal transfer
Printing mode	Manual
Printing speed	Medium
Printing quality	300 x 600 dpi
1 ribbon or ink cartridge printing capacity	~ 160 000, MG-CPM (5 x 10 mm markers)
Printing color available (monochrome)	Black / Red / Blue / Green / White
Terminal block markers material	Polycarbonate
Terminal block markers	
SNK series terminal blocks blank markers polyamide	–
SNK series terminal blocks blank markers polycarbonate	MG-CPM
SNK series terminal blocks blank markers PVC	MG-CPMF
SNA and solution series terminal blocks blank markers polyamide	–
SNA and solution series terminal blocks blank markers polycarbonate	MG-CPM
SNA and solution series terminal blocks blank markers PVC	MG-CPMF
SNA and solution series terminal blocks blank side markers (5 mm height) polyamide	–
End stop markers	2 marker types
Other terminal blocks manufacturers blank markers	15 manufacturers
Wires and cables markers	4 marker types
Components and equipment markers	9 marker types

For basic marking applications

	AMS 600 - AMS 250
	Plotter
	Manual
	Low
	300 x 300 dpi
	~ 230 000 markers (with 3 characters per markers)
	Black
	Polyamide
	MC…PA
	–
	–
	RC / RCAL / RB / RCT / RCP5 / RPEV
	–
	REH / RTM
	RC55 / RC65
	4 marker types
	5 manufacturers
	1 marker type
	9 marker types

1

1SNC160207S0201

HTP500 kit and accessories 10

Terminal block identification

Selection guide for terminal block markers			12
Terminal block markers	**MC...**	for SNK series	14
	RC...TT	for SNA and Solution series	15
Other manufacturers' terminal block markers	**RCP, RCW, RCL**		16
End stop markers	**MCLH, MCLH-R1**	for SNK series	18
	RCPEAD-TT	for SNA and Solution series	20
End stop label holders and covers	**LH, LH-R1**	for SNK series	19
	PEAD, EPR2	for SNA and Solution series	20
	PEB, PEBM, EPR1	for SNA and Solution series	29

Wire and cable identification

Selection guide for wire and cable markers			22
Wire and cable markers	**WMTT**	PVC label (need label holder)	24
	PCGS	large label (need label holder)	26
Wire and cables label holders	**RING, SNAP, RINGT23**	transparent label holder	25
	RINGT209	for large label tied-on thick cables	26

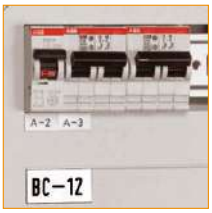

Component and equipment identification

Self-adhesive labels	**RPA-TT, PIB2-TT**		28
	PAM	for strip identification	30
Pre-cut labels	**BA4**	for contactors, relays...	31
	PPB	two-colored label	32
Label holders and covers	**PAM100015, PCT**	15 mm rail and protective cover	33
	KA1-8120	push-button marker holder	33

Panel identification

Self-adhesive panel plates	**PAT**		34
Rivet fixing panel plates	**PPT**		34

Other manufacturers markers selection guide 158

HTP500 thermal transfer printer
Kit and accessories

HTP500-V2 KIT

HTP500-CLEAN

HTP500-FEED

HTP500-PL

HTP500-PL2

HTP500-PL3

RIB-B

Description

- Performance,
- High volume and serial production,
- Dedicated to terminal blocks.

Ordering details

Description	Type	Part Number		Pkg pce	Weight (1 pce) g
Thermal transfer printer KIT	HTP500-V2 KIT	1SNA235700R1500		1	16000.00
List of items included in the KIT :					
1 HTP500-V2 Thermal transfer printer	HTP500-V2				
1 software CD	HTS500				
1 power supply cable	HTP500-PW				
1 USB cable	HTP500-USB				
1 support table	HTP500-BAS				
1 universal feeder for marker cards	HTP500-FEED				
1 cleaning cassette	HTP500-CLEAN				
1 black ribbon cassette	RIB-B				
1 support plate for terminal block markers	HTP500-PL2				
1 universal support plate for wire markers	HTP500-PL				

Feeders and support plates

Description	Type	Part Number		Pkg pce	Weight (1 pce) g
Universal feeder for marker cards	HTP500-FEED	1SNA235703R0400		1	515.00
Support plate for terminal block markers	HTP500-PL2	1SNA235705R0600		1	130.00
Universal support plate for wire markers	HTP500-PL	1SNA235704R0500		1	294.00
Support plate for other manufacturers terminal block markers	HTP500-PL3	1SNA235707R0000		1	130.00
Support plate for BA4 markers	HTP500-BA4	1SNA235712R2400		1	291.00

Accessories

Description	Type	Part Number		Pkg pce	Weight (1 pce) g
Black ribbon cassette	RIB-B	1SNA235710R0600		3	69.03
Red ribbon cassette for identification plates and adhesive labels	RIB-R	1SNA235711R2300		3	69.03
Red ribbon cassette for terminal blocks and wire markers	RIB-RS	1SNA235718R0200		3	69.03
Cleaning cassette	HTP500-CLEAN	1SNA235714R2600		1	83.50
Standard cleaning roll ø18	HTP500-ROLL	1SNA235715R2700		1	40.50
Printing head	HTP500-PRINT	1SNA235716R2000		1	20.00
Power supply cable	HTP500-PW	1SNA235709R1200		1	120.00
Dust cover for HTP500 and AMS 500 systems	DUST COVER	1SNA360161R1500		1	200.00
Wooden box for HTP500-V2 KIT	HTP500-WB	1SNA235717R2100		1	9980.00
Software CD	HTS500	1SNA235702R0300		1	17.00
Support table	HTP500-BAS	1SNA235706R0700		1	4060.00
Power supply cable	HTP500-PW	1SNA235709R1200		1	120.00

1SNK160084S0201

HTP500 markers selection guide

Terminal block blank markers selection guide

Terminal blocks (Terminal blocks styles not listed on the chart do not have a marker compatible with this printer)

Connection technology	Terminal block part number	Marker type	Marker mounting
Screw clamp	1SNK...	Strip marker	Top and side marking
	1SNA... (1)	Strip marker	Side marking
PI-Spring and pluggable PI-Spring	1SNK...	Strip marker	Top and side marking
Spring clamp	1SNA... (1)	Strip marker	Top marking
Spring loaded screw clamp	1SNA...	Strip marker	Side marking
Pluggable screw clamp	1SNA...	Strip marker	Side marking

(1) Except mini-blocks.

SNK series end stop and label holders

BAZ1	Individual marker	Top marking	MC512
BAM4		Top and side marking	MC812
LH (label holder for BAM4, BAZH1, BAZ1)	Label	Top marking	MC-LH
LH-R1 (label holder for BAM4, BAZH1, BAZ1)			MC-LHR1

Terminal blocks spacing											
5 mm 0.197 in	5.08 mm 0.200 in	5.2 mm 0.205 in	6 mm 0.236 in	8 mm 0.315 in	10 mm 0.394 in	12 mm 0.472 in	16 mm 0.630 in	22 mm 0.866 in	26 mm 1.024 in	31 mm 1.220 in	36 mm 1.417 in
		MC512	MC612	MC812	MC812 (2)						
RC510TT			RC610TT	RC810TT	RC810TT (2)						
		MC512	MC612	MC812	MC812 (2)						
RC510TT			RC610TT	RC810TT	RC810TT (2)						
			RC610TT	RC810TT	RC810TT (2)						
	RC510TT										

(2) Marker width < marking's area size - markers must be mounted individually.

SNA series end stop and label holders

BAM2, BADH	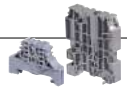	Individual marker		Top and side marking	RC810TT (2)
BADL					RC810TT
BADRL, BAR		Individual marker		Top marking	RC610TT
BAMH					RC810TT
PEAD (Label holder for BAM2 and BADL)		Label		Top marking	RCPEAD-TT
PEB		Label		Top marking	PIB2-TT

(2) Marker width < marking's area size - markers must be mounted individually.

1SNC160209S0201 - Rev. A

MC terminal block markers
Blank markers for SNK series

1SNK160156F0014

MC512

Description
- Blank marker card designed for high marking quality,
- Dedicated to SNK series terminal block marking,
- Excellent marking durability in the most severe environments,
- Made of rigid polycarbonate.

Main technical data

Material	Flammability	Temperature range
Polycarbonate	V0	-55°C to +110°C -67°F to +230°F

Ordering details

Dimensions mm	Dimensions in	Maximum printed digits Hor.	Maximum printed digits Vert.	Nb. of markers per card	Color	Type	Part Number		Pkg card	Weight (1 card) g
SNK series terminal block markers										
MC512										
For 5.2 mm *0.205 in* spacing terminal blocks and BAZ1 end stop										
12 x 5	0.472 x 0.197	3	8	45	White	MC512	1SNK140000R0000		22	9.00
					Yellow	MC512-YL	1SNK140004R0000		22	9.00
MC612										
For 6 mm *0.236 in* spacing terminal blocks										
12 x 5.6	0.472 x 0.220	3	8	39	White	MC612	1SNK150000R0000		22	10.00
					Yellow	MC612-YL	1SNK150004R0000		22	10.00
MC812										
For 8 mm *0.315 in* and larger spacing terminal blocks and BAM4 end stop										
12 x 7.6	0.472 x 0.299	4	8	30	White	MC812	1SNK160000R0000		22	10.00
					Yellow	MC812-YL	1SNK160004R0000		22	10.00

Marking System Accessories

HTP500-PL2

Support plate

Included in the HTP500-V2 kit						HTP500-PL2	1SNA235705R0600		1	291.00

Mounting instruction

1SNC160190S0201

RC..TT terminal block markers

Blank markers for SNA and Solution series

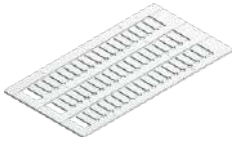

1SNC160246F0014

RC510TT

Description

- Blank marker card designed for high marking quality,
- Excellent marking durability in the most severe environments,
- Made of rigid polycarbonate.

Main technical data

Material	Flammability	Temperature range
Polycarbonate	V0	-50°C to +120°C -58°F to +248°F

Ordering details

Dimensions mm	Dimensions in	Maximum printed digits Hor.	Maximum printed digits Vert.	Nb. of markers per card	Color	Type	Part Number		Pkg card	Weight (1 card) g
For 5 mm *0.197 in* terminal block spacing										
RC510TT										
For 5 mm *0.197 in* spacing terminal blocks										
10 x 5	0.394 x 0.197	3	7	48	White	RC510TT	1SNA231600R1500		22	12.00
					Yellow	RC510TT-YL	1SNA231700R1100		22	12.00
For 6 mm *0.236 in* terminal block spacing										
RC610TT										
For 6 mm *0.236 in* spacing terminal blocks										
10 x 6	0.394 x 0.236	3	7	39	White	RC610TT	1SNA233600R1700		22	12.00
					Yellow	RC610TT-YL	1SNA233700R1300		22	12.00
For 8 mm *0.315 in* terminal block spacing										
RC810TT										
For 8 mm *0.315 in* and larger spacing terminal blocks and end stops from SNA series										
10 x 8	0.394 x 0.315	4	7	30	White	RC810TT	1SNA234600R1000		22	12.00
					Yellow	RC810TT-YL	1SNA234700R1400		22	12.00

Marking System Accessories

HTP500-PL2

Support plate

Included in the HTP500-V2 kit		HTP500-PL2	1SNA235705R0600		1	291.00

Mounting instruction

1SNC160191S0201

RCP, RCW, RCL terminal block markers
Blank markers for other manufacturers

1SNC160249F0014

RCP510

Description

- Blank marker card designed for high marking quality,
- To be used to mark terminal blocks from other manufacturers,
- Excellent marking durability in the most severe environments,
- Made of rigid polycarbonate.

Main technical data

Material	Flammability	Temperature range
Polycarbonate	V0	-50°C to +120°C -58°F to +248°F

Ordering details

Dimensions mm	Dimensions in	Maximum printed digits Hor.	Maximum printed digits Vert.	Nb. of markers per card	Color	Type	Part Number		Pkg card	Weight (1 card) g
RCP510										
For Wago and Phoenix screw clamp terminal blocks										
10 x 5	0.394 x 0.197	3	7	45	White ☐	RCP510	1SNA235095R1600		12	11.25
RCW510										
For Weidmüller terminal blocks										
10 x 5	0.394 x 0.197	3	7	45	White ☐	RCW510	1SNA235096R1700		12	10.83
RCL510										
For Legrand, Wieland and Télémécanique terminal blocks										
10 x 5	0.394 x 0.197	3	7	45	White ☐	RCL510	1SNA235097R1000		12	10.42

Marking System Accessories

HTP500-PL3

Support plate										
Purchased separately						HTP500-PL3	1SNA235707R0000		1	130.00

See other manufacturer selection guide at the end of this catalogue.

1SNC160192S0201

MCLH end stop markers

Self-adhesive precut blank labels for SNK series

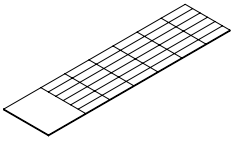

1SNC700301F0000

MCLH, MCLH-R1

Description

– Identify your terminal block assemblies with the self-adhesive label adapted to the LH label holders.

Main technical data

Material	Flammability	Temperature range
PVC + Adhesive acrylic	V0	-55°C to +110°C -67°F to +230°F

Ordering details

Dimensions mm	Dimensions in	Nb. of markers per card	Color	Type	Part Number		Pkg card	Weight (1 card) g
For LH label holder								
MCLH								
30 x 8.8	1.181 x 0.346	36	White	MCLH	1SNK900630R0000		25	10.00
			Yellow	MCLH-YL	1SNK900633R0000		25	10.00
For LH-R1 label holder								
MCLH-R1								
35.35 x 17.65	1.392 x 0.695	15	White	MCLH-R1	1SNK900631R0000		25	10.00
			Yellow	MCLH-R1-YL	1SNK900634R0000		25	10.00

Marking system accessories

No support plate needed.
Direct insertion into HTP500 marking system for printing.

Mounting instruction

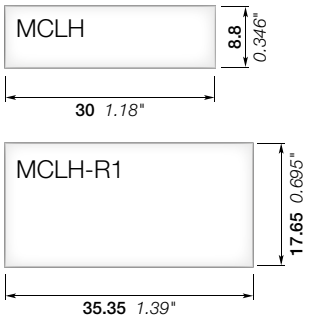

Compatible holders

LH

LH-R1

1SNC160200S0201

LH, LH-R1 end stop label holders
For MCLH labels

1SNK160210F0014

Description

- Easily identify your terminal blocks assembly with white or yellow labels,
- Adjustable in height for best visibility,
- Compatible with all SNK end stops.

Main technical data

Material	Flammability	Temperature range
Polyamide	V0	-55°C to +110°C -67°F to +230°F

Ordering details

Spacing mm	Spacing in	Dimensions mm	Dimensions in	Color	Type	Part Number		Pkg pce	Weight (1 pce) g
For MCLH									
LH									
10	0.394	8.8 x 30	0.35 x 1.18	Dark Grey	LH	1SNK900605R0000		50	0.60
For MCLH-R1									
LH-R1									
19.5	0.768	17.9 x 35.65	0.70 x 1.40	Dark Grey	LH-R1	1SNK900607R0000		50	1.10

LH

LH-R1

Dimensions given apply to the labelling area.

Compatible end stops

BAM4
1SNK900001R0000

BAZ1
1SNK900002R0000

BAZH1
1SNK900102R0000

1SNC160201S0201

RCPEAD-TT end stop labels
Self-adhesive precut blank labels

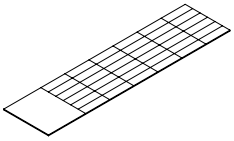

1SNC700302F0000

RCPEAD-TT

Description

– Identify your terminal block assemblies with the self-adhesive label adapted to the PEAD label holders.

Main technical data

Material	Flammability
PVC + Adhesive acrylic	V0

Ordering details

Dimensions mm	Dimensions in	Nb. of markers per card	Color	Type	Part Number		Pkg card	Weight (1 card) g
RCPEAD-TT								
9 x 29	0.354 x 1.142	36	White	RCPEAD-TT	1SNA235158R0100		25	9.80
			Yellow	RCPEAD-TT-YL	1SNA235159R0200		25	9.60

Marking system accessories

No support plate needed.
Direct insertion into HTP500 marking system for printing.

Mounting instruction

PEAD + RCPEAD-TT

PEAD end stop label holders
For RCPEAD label

1SNC160059F0014

PEAD

Description

– Easily identify your terminal block assemblies with white or yellow labels,
– Adjustable in height for best visibility,
– Compatible with BAM2 and BADL SNA series end stops.

Main technical data

Material	Flammability
Polyamide	V0

Ordering details

Dimensions mm	Dimensions in	Color	Type	Part Number		Pkg pce	Weight (1 pce) g
PEAD							
Label holder for end stop, compatible with RCPEAD and RCEPAD-TT markers and EPR2 cover.							
9 x 29	0.354 x 1.142	Grey	PEAD	1SNA399719R1000		20	0.78

Dimensions given apply to the labelling area.

EPR2

Card of 20 covers for RCPEAD and RCPEAD-TT markers

9 x 29	0.354 x 1.142	Transparent	EPR2	1SNA399726R0700		1	4.00

Compatible end stops

BAM2
1SNA206351R1600

BADL
1SNA399903R0200

1SNC160202S0201 - Rev. A

Evolutive and protected wire and cable identification

Each individual label and label holder is easily detached from the stem for installation onto cable. The printed label in its holder is perfectly protected over time.

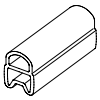

RING
Slide-on cable label holders to be used before connecting the wires.

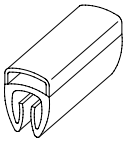

SNAP
Clip-on cable label holders to be snap-on the wire already connected or not.

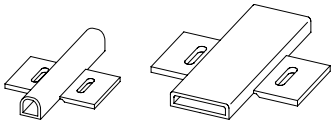

RINGT
Tie-on cable label holders recommended for thick tube, hose and conduit.

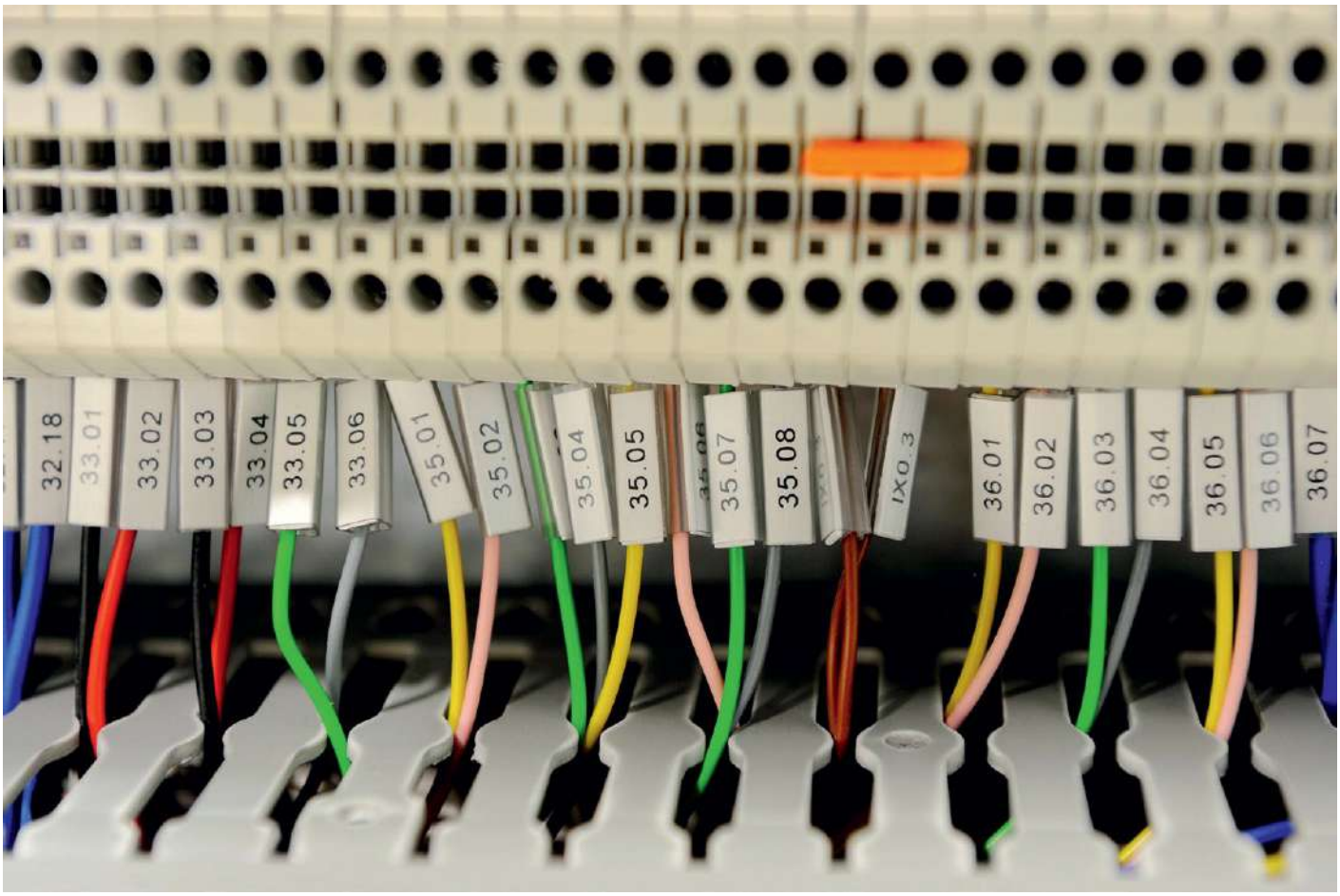

1SNC160210S0201

For evolutive identification

Marker holders + slide-in markers

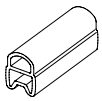

RING

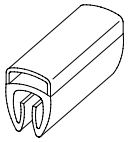

SNAP

Wire external diameter mm	Wire external diameter in	Marker holder length mm	Marker holder length in	Marker holder	Compatible marker
Slide-on cable marker holder					
Ø 1.5 ... 2.5	Ø 0.059 ... 0.098	12	0.472	RING122	WMTT 12
		18	0.709	RING182	WMTT 18
Ø 2 ... 4	Ø 0.079 ... 0.157	12	0.472	RING124	WMTT 12
		18	0.709	RING184	WMTT 18
Ø 4 ... 7	Ø 0.157 ... 0.276	12	0.472	RING127	WMTT 12
		18	0.709	RING187	WMTT 18
Ø 6 ... 10	Ø 0.236 ... 0.394	12	0.472	RING1210	WMTT 12
		18	0.709	RING1810	WMTT 18
Clip-on cable marker holder					
Ø 2 ... 3.5	Ø 0.079 ... 0.138	15	0.591	SNAP152	WMTT 12
		23	0.906	SNAP232	WMTT 18
Ø 2.8 ... 5	Ø 0.11 ... 0.197	15	0.591	SNAP154	WMTT 12
		23	0.906	SNAP234	WMTT 18
Ø 5 ... 8	Ø 0.197 ... 0.315	15	0.591	SNAP157	WMTT 12
		23	0.906	SNAP237	WMTT 18
Ø 8 ... 10	Ø 0.315 ... 0.394	15	0.591	SNAP1510	WMTT 12
		23	0.906	SNAP2310	WMTT 18

For identification of thick tubes

Tie-on markers / marker holders

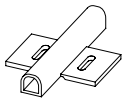

RINGT23

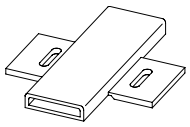

RINGT209

Marker holder length mm	Marker holder length in	Marker holder	Compatible marker
23	23	RINGT23	WMTT 18
28	28	RINGT209	PCGS209

1SNC160210S0201

WMTT wire and cable markers
Slide-in precut blank labels

1SNC700183F0000

WMTT12

Description

- Blank marker card for wire and cable identification,
- Markers are protected in the marker holders,
- To be slided into RING or SNAP transparent holders,
- Made of rigid polycarbonate.

Main technical data

Material	Flammability	Temperature range
Polycarbonate	V0	-50°C to +80°C -58°F to +176°F

Ordering details

Dimensions mm	Dimensions in	Maximum printed digits Hor.	Maximum printed digits Vert.	Nb. of markers per card	Color	Type	Part Number		Pkg card	Weight (1 card) g
WMTT12										
12 mm *0.472 in* markers (for RING or SNAP holders)										
12 x 4	0.472 x 0.157	2	8	30	White ☐	WMTT12	1SNA235093R1400		32	6.70
WMTT18										
18 mm *0.709 in* markers										
18 x 4	0.709 x 0.157	2	10	18	White ☐	WMTT18	1SNA235094R1500		32	7.00

Marking system accessories

HTP500-PL										
Support plate										
Included in the HTP500-V2 kit						HTP500-PL	1SNA235704R0500		1	294.00

Compatible holders

RING
Sealed transparent holder

SNAP
Unsealed transparent holder

RINGT23
Tie-on sealed transparent holder

1SNC160193S0201

RING, SNAP transparent marker holders
For WMTT markers

1SNC160251F0014

Description

- Transparent marker holder profiled to allow marking on various cable sizes, up to ø 10 mm *0.394 in*,
- Use with WM and WMTT markers,
- Made of PVC.

Main technical data

Material	Flammability	Temperature range
PVC	V0	-50°C to +80°C -58°F to +176°F

Ordering details

Wire ext. diameter mm	Wire ext. diameter in	Wire section mm²	Holder length mm	Holder length in	Color	Type	Part Number		Pkg pce	Weight (1 pce) g
For cable mounting										
RING										
12 mm *0.472 in* sealed transparent holder for WM12 and WMTT12 markers										
1.5 ... 2.5	0.059 ... 0.098		12	0.472	Transparent ☑	RING122	1SNA235117R1000		3000	1.80
2 ... 4	0.079 ... 0.157				Transparent ☑	RING124	1SNA235118R2100		3000	2.20
4 ... 7	0.157 ... 0.276				Transparent ☑	RING127	1SNA235119R2200		2000	0.30
6 ... 10	0.236 ... 0.394				Transparent ☑	RING1210	1SNA235120R2700		2000	0.50
18 mm *0.709 in* sealed transparent holder for WM18 and WMTT18 markers										
1.5 ... 2.5	0.059 ... 0.098		18	0.709	Transparent ☑	RING182	1SNA235123R1600		3000	0.30
2 ... 4	0.079 ... 0.157				Transparent ☑	RING184	1SNA235124R1700		3000	0.30
4 ... 7	0.157 ... 0.276				Transparent ☑	RING187	1SNA235125R1000		2000	0.50
6 ... 10	0.236 ... 0.394				Transparent ☑	RING1810	1SNA235126R1100		1000	0.70
SNAP										
12 mm *0.472 in* un-sealed transparent holder for WM12 and WMTT12 markers										
2 ... 3.5	0.079 ... 0.138		15	0.591	Transparent ☑	SNAP152	1SNA235129R2400		1000	0.40
2.8 ... 5	0.110 ... 0.197				Transparent ☑	SNAP154	1SNA235130R2100		1000	0.40
5 ... 8	0.197 ... 0.315				Transparent ☑	SNAP157	1SNA235131R1600		500	0.50
8 ... 10	0.315 ... 0.394				Transparent ☑	SNAP1510	1SNA235132R1700		500	1.40
23 mm *0.906 in* in un-sealed transparent holder for WM18 and WMTT18 markers										
2 ... 3.5	0.079 ... 0.138		23	0.906	Transparent ☑	SNAP232	1SNA235133R1000		500	0.40
2.8 ... 5	0.110 ... 0.197				Transparent ☑	SNAP234	1SNA235134R1100		500	0.60
5 ... 8	0.197 ... 0.315				Transparent ☑	SNAP237	1SNA235135R1200		200	0.90
8 ... 10	0.315 ... 0.394				Transparent ☑	SNAP2310	1SNA235136R1300		200	2.20
For thick tube mounting										
RINGT23										
23 mm *0.906 in* tie-on sealed transparent holder for WM and WMTT markers										
			23	0.906	Transparent ☑	RINGT23	1SNA235137R1400		200	0.40

RING

SNAP

RINGT23

Use holders only with designated cable marker of the same or a shorter length.

2

1SNC160194S0201

PCGS wire and cable markers
Slide-in precut blank labels

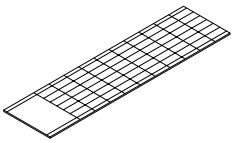

1SNC700181F0000

PCGS209

Description
- Blank marker card for thick wires,
- To be inserted in RINGT209 holder,
- Made of PVC.

Main technical data

Material	Flammability	Temperature range
PVC	V0	-40°C to +60°C -40°F to +140°F

Ordering details

Dimensions mm	Dimensions in	Nb. of markers per card	Color	Type	Part Number		Pkg card	Weight (1 card) g
PCGS								
For RINGT holders								
20 x 9.3	0.787 x 0.366	60	White	PCGS209	1SNA235150R0500		40	10.00

Marking system accessories

HTP500-PL

Support plate

Included in the HTP500-V2 kit				HTP500-PL	1SNA235704R0500		1	294.00

RINGT209 transparent marker holders
For PCGS markers

1SNC160100F0014

RINGT209

Description
- Transparent tie-on marker holders profiled to allow thick tube identification,
- Use with PCGS209 markers,
- Made of PVC.

Main technical data

Material	Flammability	Temperature range
PVC	V0	-50°C to +80°C -58°F to +176°F

Ordering details

Dimensions mm	Dimensions in	Color	Type	Part Number		Pkg pce	Weight (1 pce) g
For thick tube mounting							
RINGT209							
Tie-on sealed transparent holder for PCGS markers							
9.5 x 20	0.374 x 0.787	Transparent	RINGT209	1SNA235142R2100		240	6.00

Use holders only with designated cable marker of the same or a shorter length.
Dimensions given apply to the labelling area.

1SNC160195S0201

RPA-TT, PIB2-TT component and equipment markers

Self-adhesive precut blank labels

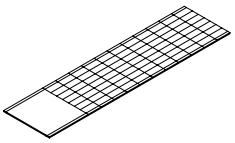

1SNC160253F0014

RPA-TT

Description

- Self-adhesive labels for general purpose,
- High performance adhesive compatible with most surface types.

Main technical data

Material	Flammability
PVC + Adhesive acrylic	V0

Ordering details

Dimensions mm	Dimensions in	Nb. of markers per card	Color	Type	Part Number		Pkg card	Weight (1 card) g
RPA-TT								
Card of 77 self-adhesive blank labels								
8 x 17.5	0.315 x 0.689	77	White	RPA-TT	1SNA235151R2200		25	12.50
			Yellow	RPA-TT-YL	1SNA235152R2300		25	12.10
PIB2-TT								
Card of 15 self-adhesive blank labels								
35 x 17.5	1.392 x 0.689	15	White	PIB2-TT	1SNA235155R2600		25	9.70
			Yellow	PIB2-TT-YL	1SNA235157R2000		25	9.40

Marking system accessories

No support plate needed.
Direct insertion into HTP500 marking system for printing.

Mounting instruction

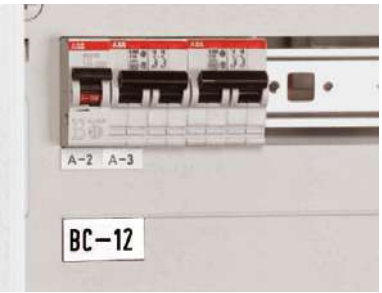

Compatible holders

PEB
(only for PIB2-TT)

1SNC160203S0201

PEB end stop label holders
For PIB2-TT labels

PEB

Description

- To be used for terminal block assembly identification,
- Direct insertion onto end stops from SNA series.

Main technical data

Material	Flammability	Temperature range
Polyamide (PEB) PVC (EPR1)	V0	-55°C to +110°C -67°F to +230°F

Ordering details

Dimensions mm	Dimensions in	Color	Type	Part Number		Pkg pce	Weight (1 pce) g
PEB							
Label holder for end stop 35 x 17 mm *1.378 x .669 in*, to be snapped onto end stop							
18 x 35.5	0.709 x 1.378	Grey	PEB	1SNA113077R1100		50	1.70
EPR1							
Card of 54 PVC protective covers							
17.5 x 35	0.689 x 1.378	Transparent	EPR1	1SNA178431R2200		1	0.054
PEBM							
"All in one": PEB marker holder with marker and protection included							
			PEBM	1SNA113084R0100		50	2.80

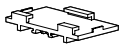

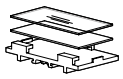

Compatible end stops

BAM2
1SNA206351R1600

BADL
1SNA399903R0200

BADH
1SNA116900R2700

BAMH
1SNA114836R0000

BAR
1SNA164519R2400

BADRL
1SNA199420R2100

1SNC160204S0201 - Rev. A

PAM component and equipment markers
Self-adhesive precut blank labels

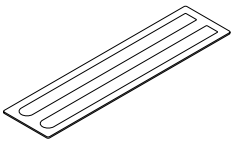

PAM

Description

- Self-adhesive blank labels used to identified different components and equipments in a cabinet,
- Can be used directly on equipment or with a label holder.

Main technical data

Material	Flammability	Temperature range
PVC	V0	-40°C to +60°C -40°F to +140°F

Ordering details

Dimensions mm	Dimensions in	Nb. of markers per card	Color	Type	Part Number		Pkg card	Weight (1 card) g
PAM								
Self-adhesive blank label compatible with PAM100015 and PCT100015 transparent cover								
15 x 215	0.591 x 8.465	2	White ☐	PAM21515	1SNA235103R2300		20	12.00
15 x 430	0.591 x 16.930		White ☐	PAM43015	1SNA235104R2400		20	22.00
Self-adhesive blank label								
20 x 215	0.787 x 8.465	2	White ☐	PAM21520	1SNA235105R2500		20	14.00
20 x 430	0.787 x 16.930		White ☐	PAM43020	1SNA235106R2600		20	27.00

Marking system accessories

No support plate needed.
Direct insertion into HTP500 marking system for printing.

Compatible holders

PCT100015

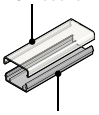

PAM100015

Protective cover and self-adhesive marking profile
(only for PAM21515 and PAM43015)

1SNC160196S0201

1SNC160101F0014

Description

- Precut blank label used to identify contactors, overload relays and manual motor starters,
- Compatible with: AF09 ... AF370 contactors, TF thermal overload relays, EF electronic overload relays, and MS116, MS132 manual motor starters.

Main technical data

Material	Flammability
Polycarbonate	V0

Ordering details

Dimensions mm	Dimensions in	Color	Type	Part Number		Pkg card	Weight (1 card) g
BA4							
Card of 16 blank labels							
7 x 20	0.276 x 0.787	White	BA4	1SNA235156R2700		16	11.00

Marking system accessories

HTP500-BA4

Support plate for AMS600

Purchased separately		HTP500-BA4	1SNA235712R2400		1	290.00

Mounting instruction

PPB component and equipment markers
Two-colored precut blank labels

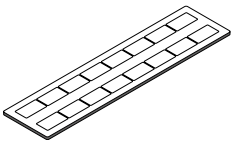

1SNC700200F0000

PPB

Description

- Two-colored blank label cards, white side / black side,
- For push button or sub-assembly identification,
- To be used with a label holder.

Main technical data

Material	Flammability	Temperature range
MMA	HB	-40°C to +82°C -40°F to +180°F

Ordering details

Dimensions mm	Dimensions in	Nb. of markers per card	Color	Type	Part Number		Pkg card	Weight (1 card) g
PPB								
15 x 27	0.591 x 1.063	16	White and Black	PPB2715	1SNA235111R1200		12	13.30

Marking system accessories

No support plate needed.
Direct insertion into HTP500 marking system for printing.

Compatible holders

PCT100015

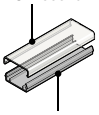

PAM100015

Protective cover and self-adhesive marking profile

KA1-8120
Push button marker holder

1SNC160197S0201

PAM100015, PCT, KA marker holders
For PAM21515, PAM43015 and PPB labels

1SNC160268F0014

Description

– For component and equipment identification,
– Self-adhesive marking profile (PAM), transparent cover (PCT) and push-button marker holder (KA1).

Main technical data

Material	Flammability	Temperature range
PVC (for PAM and PCT) Polycarbonate (for KA1)	V0 (for PAM and PCT) V2 (for KA1)	-10°C to +70°C +14°F to +158°F (for PAM and PCT) -25°C to +70°C -13°F to +158°F (for KA1)

Ordering details

Dimensions		Color	Type	Part Number		Pkg	Weight
mm	in					pce	(1 pce) g

Push-button marker holder

KA1-8120

KA1

Push button marker holder for PPB markers

15 x 27	0.591 x 1.063	Black ■	KA1-8120	1SFA616920R8120		10	2.00

Self-adhesive marking profile for PAM and PPB markers

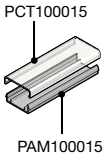

PCT

Transparent cover for PAM100015

15 x 1000	0.591 x 39.370	Transparent ⧄	PCT100015	1SNA235147R2600		35	34.00

PAM100015

Adhesive marking profile

15 x 1000	0.591 x 39.370	Black ■	PAM100015	1SNA235146R2500		35	40.00

Dimensions given apply to the labelling area.

2

1SNC160198S0201

PAT panel plates
Self-adhesive blank panel plates

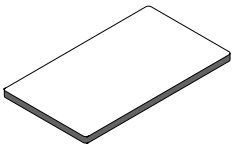

PAT

Description

– Self-adhesive blank plate for identification of electrical boxes or cabinets.

Main technical data

Material	Flammability	Temperature range
PVC	V0	-40°C to +120°C -40°F to +248°F

Ordering details

Dimensions mm	Dimensions in	Nb. of markers per card	Color	Type	Part Number		Pkg pce	Weight (1 pce) g
PAT								
Adhesive plate for external marking								
60 x 100	2.262 x 3.937	1	White ☐	PAT10060	1SNA235114R1500		15	5.30

Marking system accessories

No support plate needed.
Direct insertion into HTP500 marking system for printing.

PPT panel plates
Blank panel plates

PPT

Description

– Blank perforated plate for identification of electrical boxes or cabinets,
– To be fixed with rivets.

Main technical data

Material	Flammability	Temperature range
MMA	HB	-40°C to +82°C -40°F to +180°F

Ordering details

Dimensions mm	Dimensions in	Nb. of markers per card	Color	Type	Part Number		Pkg pce	Weight (1 pce) g
PPT								
Perforated blank plate								
30 x 120	1.181 x 4.724	1	White ☐	PPT12030	1SNA235115R1600		50	3.50
50 x 180	1.969 x 7.087		White ☐	PPT18050	1SNA235116R1700		30	8.80

Marking system accessories

No support plate needed.
Direct insertion into HTP500 marking system for printing.

Mounting instruction

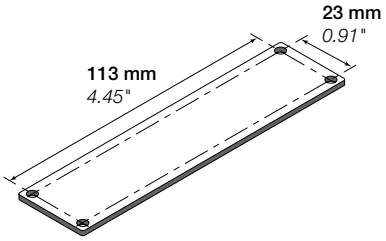

1SNC160199S0201

mg3
MARKINGENIUS

MG3 thermal transfer printer			38
Support plates overview			40
MG3 kit and accessories			41

Terminal block identification

Selection guide for terminal block markers			42
Terminal block markers	**MG-CPM-13**	for SNK series	44
	MG-CPM-...	for SNA and Solution series	44
	MG-CPMF...	strip labels	45
Other manufacturers' terminal block markers	**MG-CPM-...**		46
End stop markers	**MG-TAA**		62
	RC810TT		48
	MG-TAR		70
End stop label holders and covers	**LH, LH-R1**	for SNK series	49
	PEB, PEBM, EPR1	for SNA and Solution series	50
	PEAD, EPR2	for SNA and Solution series	51

Wire and cable identification

Selection guide for wire and cable markers			52
Wire and cable markers	**MG-TDM**	slide-on cable markers	54
	MG2-TDMO	clip-on cable markers	55
	MG-ETF	tie-on cable markers	57
	MG-TPM	ABS cable markers (need label holder)	58
	MG-TPMF	PVC cable markers (need label holder)	60
Wire and cables label holders	**UMH**		56
	PM, PM-ET, PM-AC	transparent label holder for MG-TPM	59
	PMF, PMF-ET, PMF-AC	transparent label holder for MG-TPMF	61

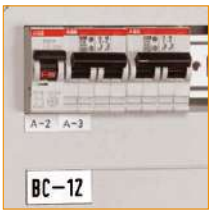

Component and equipment identification

Self-adhesive labels	**MG-TAA**		62
	MG-VYT	for dielectric requirements	63
	MG-17.5A	for strip identification	64
	MG-PTS	for push-button identification	65
Pre-cut labels	**MG-TAP**		66
	MG-TAPW	9 mm width label	68
	MG-TAP-CCS	transparent label	69
	MG-TAR	17 mm width label	70
	MG-PLC	for PLC's identification	71
Label holders and covers	**RTR-TAP**	15 mm pre-drilled rail	67
	RTA-TAP	15 mm self-adhesive rail	67
	RT-CCP	15 mm protective cover	67
	RTA-TAPW	9 mm self-adhesive rail	68

Panel identification

Self-adhesive panel plates	**MG-VRT-A**		72
Rivet fixing panel plates	**MG-VRT-R**		72

Other manufacturers markers selection guide 158

The versatile, compact and robust marking system

MARKINGenius® MG3 is a high resolution printer based on thermal transfer technology for producing high quality identification and labelling for terminal blocks, cables and all equipment mounted in electrical panels.

Compact, ergonomic, clean and quiet, MARKINGenius® MG3 may be conveniently located in an office or workshop or easily transported in the field.

Thermal transfer technology uses heat to transfer characters or symbols onto a plastic marker through an ink ribbon. Besides the excellent printing quality, there is no drying time and the markers are instantly usable.
With the MG3 thermal transfer printer, forget about drying times and clogged print head problems.

Combined simplicity, performance and make savings

Facilitate your printing process
Compact design (382 x 230 x 230 mm) facilitates use in workshops or in the field.
Easy to install and use: comprehensive quick-start kit. Intuitive software with easy data import and entry.
Versatile: many different media available: plastic markers, stickers, labels etc.

Save time and consumables
Gain time with a short printing process: 12 seconds cycle. Carriage loading and unloading operation is fast and simple.
Economic: up to 300 000 markers with one ribbon. Partially printed marker card may be reused to avoid wastage.
No drying time: printed markers are immediately ready to use.

Experience quality
High Quality printing: 300 x 600 dpi for image or graphic printing.
Robust: all moving parts are in metal.

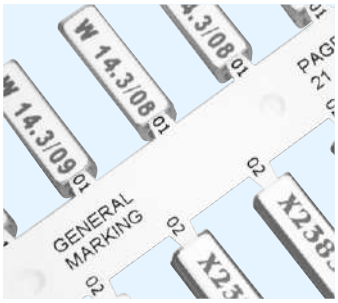

High quality printing

Short printing cycle of 12 seconds

Economic: up to 300 000 markers with one ribbon

Many media types available for printing

1SNC160211S0201

The MG3 printer is delivered with a comprehensive set of accessories for getting started quickly

Kit (Part number: 1SNB419001R0000) including:

- 1 Thermal transfer printer
- 1 Software CD
- 1 Power supply cable
- 1 USB cable
- 1 Installation, operating, maintenance and user documentation
- 1 Protective cover
- 1 Ribbon take up spool
- 1 MG2-QTB support plate for terminal block markers (MG-CPM-01, 02, 03, 04, 07)
- 1 MG2-PWC support plate for wire and cable markers (MG-TPM)
- 1 MG2-PLT support plate for wire and cable markers (MG-TPMF) and various labels and signs
- 1 MG2-ETB Support plate for SNK series terminal block markers (MG-CPM-13)
- 1 MG2-ETR Black printing ribbon.

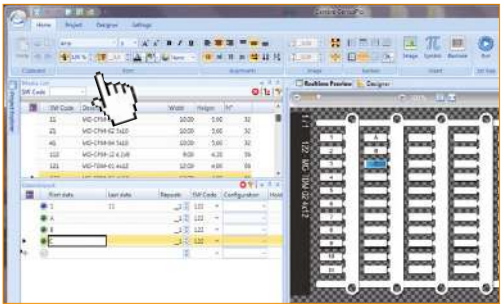

Genius Pro software

The Genius Pro software application benefits from long experience in the field and requires the operator to have only basic skills in order to use it. It is application-oriented and provides fast and easy data entry including a dynamic full-size media preview giving an accurate representation of the current job.

Features / characteristics:

- More than ten types of counter such as *.txt, *.cad, *.dbf, *.xls can be imported
- AutoCAD, Elcad, Spac and Excel import
- MATRIX, ACS and Simplo conversion
- Optimised printing of media for cables, terminal blocks, control gear, connectors, push buttons, components, panels and self-adhesive labels
- Specially developed proprietary Genius font and also Windows fonts
- Designs customised media
- Vector, drawing and clip art printing
- Free upgrades for each new release
- Microsoft® Windows® XP, Windows Vista®, Windows 2000 SP4®, Windows 7®.

1SNC160211S0201

MG3 thermal transfer printer

Find out quickly which support plate your printing job needs

Support plates included in MG3 Kit

Support plate type		MG2-PWC	MG2-PLT	MG2-QTB	MG2-ETB
Markers and labels compatibles					
Terminal block markers	**MG-CPM-01** (except 5x7 mm)			●	
	MG-CPM-02			●	
	MG-CPM-03			●	
	MG-CPM-04			●	
	MG-CPM-07			●	
	MG-CPM-13				●
Terminal block marker strips	**MG-CPMF**		●		
	MG-CPMFA		●		
Tie-on cable labels	**MG-ETF**		●		
Slide-in cable markers	**MG-TPM**	●			
Slide-in cable markers	**MG-TPMF**		●		
Labels	**MG-TAR**		●		
Labels	**MG-TAP**		●		
Labels 9 mm	**MG-TAPW**		●		
CCS Transparent markers	**MG-TAP**		●		
Self-adhesive labels	**MG-TAA**		●		
Self adhesive labels	**MG-VYT**		●		
PLC labels	**MG-PLC**		●		
Modular self-adhesive labels	**MG-17.5**		●		
Push button labels	**MG-PTS**		●		
Panel plates	**MG-VRT**		●		

Support plates to be purchased separately

Support plate type		MG2-PTD	MG2-PTM	MG2-WTB	MG2-STB	MG2-CTB	MG2-MTB	MG2-LTB
Markers and labels compatibles								
Terminal block markers	**MG-CPM-01** (5x7 mm only)						●	
	MG-CPM-05			●				
	MG-CPM-06				●			
	MG-CPM-09							●
	MG-CPM-10					●		
	MG-CPM-12			●				
Slide-on cable markers	**MG-TDM**	4x12 mm	4x16 mm					
Clip-on cable markers	**MG2-TDMO**		●					

1SNC16021250201

MG3 thermal transfer printer
Kit and accessories

MG3 KIT

Description

- Versatile,
- Compact and robust,
- Easy to install and use.

Ordering details

Description	Color	Type	Part Number		Pkg pce	Weight (1 pce) g
MG3 Thermal transfer printer KIT		MG3 KIT	1SNB419001R0000		1	12600.00
List of items included in the KIT:						
1 MG3 Thermal transfer printer		MG3				
1 Software CD		MG3 SOFTWARE				
1 Power supply cable		MG3 POWER				
1 USB cable		MG3 USB				
1 Protective cover		MG2 COVE 991680				
1 Ribbon take up spool		MG2-CRB 991654				
1 Black monochrome ribbon		MG2-ETR 991600				
1 Support plate for cable tags MG-TPM		MG2-PWC 991000				
1 Support plate for labels, cables, plates and various markers		MG2-PLT 991002				
1 Support plate for terminal block markers MG-CPM-01(5x10 and 5x15),02,03,04,07		MG2-QTB 991011				
1 Support plate for SNK series terminal block markers (MG-CPM-13)		MG2-ETB 991016				

Support plate MG2-...

Support plates

Description	Color	Type	Part Number		Pkg pce	Weight (1 pce) g
Support template for:						
Cable tags MG-TPM		MG2-PWC 991000	1SNB991000R0000		1	148.00
Labels, cable tags, plates and various markers		MG2-PLT 991002	1SNB991002R0000		1	148.00
Terminal block markers MG-CPM-05,12		MG2-WTB 991004	1SNB991004R0000		1	151.00
Terminal block markers MG-CPM-06		MG2-STB 991005	1SNB991005R0000		1	158.00
Terminal block markers MG-CPM-10		MG2-CTB 991006	1SNB991006R0000		1	156.00
Cable tags MG-TDM (4x12 mm)		MG2-PTD 991007	1SNB991007R0000		1	126.00
Terminal block markers MG-CPM-01 (5x7 mm)		MG2-MTB 991008	1SNB991008R0000		1	149.00
Cable tags MG2-TDMO and MG-TDM (4x16 mm)		MG2-PTM 991010	1SNB991010R0000		1	116.00
Terminal block markers MG-CPM-01 (5x10 and 5x15 mm),02,03,04,07		MG2-QTB 991011	1SNB991011R0000		1	120.00
Terminal block markers TE Connectivity RC and MC series		MG2-ABM 991012	1SNB991012R0000		1	146.00
Terminal block markers MG-CPM-09		MG2-LTB 991013	1SNB991013R0000		1	128.00
Terminal block markers SNK series MG-CPM-13		MG2-ETB 991016	1SNB991016R0000		1	100.00

PET blank cover for support plate

Description	Color	Type	Part Number		Pkg pce	Weight (1 pce) g
PET blank for support plate MG2-PWC		MG2-TWC 991502	1SNB991502R0000		3	16.70
PET blank for support plate MG2-PLT		MG2-TLT 991522	1SNB991522R0000		3	14.70
PET blank for support plate MG2-PTD		MG2-TTD 991563	1SNB991563R0000		3	11.70
PET blank for support plate MG2-MTB		MG2-TMT 991513	1SNB991513R0000		3	12.00
PET blank for support plate MG2-WTB		MG2-TWT 991542	1SNB991542R0000		3	12.00
PET blank for support plate MG2-STB		MG2-TST 991552	1SNB991552R0000		3	21.50
PET blank for support plate MG2-CTB		MG2-TCT 991562	1SNB991562R0000		3	12.00
PET blank for support plate MG2-QTB		MG2-TGT 991532	1SNB991532R0000		3	11.70
PET blank for support plate MG2-ETB		MG2-TTB 991512	1SNB991512R0000		3	10.70

Ribbons MG2-ETR...

Accessories

Description	Color	Type	Part Number		Pkg pce	Weight (1 pce) g
Print head cleaning kit		MG2-CKP 991670	1SNB991670R0000		1	336.00
Black monochrome ribbon	Black	MG2-ETR 991600	1SNB991600R0000		1	227.00
Blue monochrome ribbon	Blue	MG2-ETR 991601	1SNB991601R0000		1	229.00
Red monochrome ribbon	Red	MG2-ETR 991602	1SNB991602R0000		1	255.00
Green monochrome ribbon	Green	MG2-ETR 991603	1SNB991603R0000		1	247.00
White monochrome ribbon	White	MG2-ETR 991606	1SNB991606R0000		1	333.00

1SNC160112S0201 - Rev. A

MG3 markers selection guide

Terminal block blank markers selection guide

Terminal blocks (Terminal blocks styles not listed on the chart do not have a marker compatible with this printer)

Connection technology	Terminal block part number	Marker type	Marker mounting
Screw clamp	1SNK...	Individual marker (3)	Top and side marking
		Adhesive strip label	Top and side marking
	1SNA... (1)	Individual marker (3)	Side marking
		Strip marker	Side marking
		Strip label	Side marking
PI-Spring	1SNK...	Individual marker (3)	Top and side marking
		Adhesive strip label	Top and side marking
Spring clamp	1SNA...	Individual marker (3)	Top marking
			Side marking
		Strip marker	Side marking
		Strip label	Side marking
Spring loaded screw clamp	1SNA...	Individual marker (3)	Side marking
		Strip marker	Side marking
Pluggable screw clamp	1SNA...	Individual marker (3)	Side marking

(1) Except mini-blocks.
(3) Can be strip mounted when marker spacing = terminal block spacing.

Special terminal blocks (Terminal blocks styles not listed on the chart do not have a marker compatible with this printer)

D4/6.T...	1SNA...	Strip label	Side marking
D2.5/6.D...	1SNA...	Strip label	Side marking
D4/6.P.T1	1SNA...	Strip label	Side marking

SNK series end stop and label holders

BAZ1	Individual marker	Top marking	MG-CPM 13 41790
BAM4		Top and side marking	MG-CPM 13 41791 (6 mm spacing)
LH (label holder for BAM4, BAZH1, BAZ1)	Label	Top marking	MG-TAA 49498
LH-R1 (label holder for BAM4, BAZH1, BAZ1)			MG-TAA 49198 MG-TAR 45194
UMH (Universal wire markers holder for BAM4, BAZ1)	Wire marker	Top marking	MG2-TDMO

1SNC1602135O201 - Rev. A

Terminal blocks spacing											
5 mm 0.197 in	5.08 mm 0.200 in	5.2 mm 0.205 in	6 mm 0.236 in	8 mm 0.315 in	10 mm 0.394 in	12 mm 0.472 in	16 mm 0.630 in	22 mm 0.866 in	26 mm 1.024 in	31 mm 1.220 in	36 mm 1.417 in
		MG-CPM-13 41790	MG-CPM-13 41791	MG-CPM-13 41791 (2)							
		MG-CPMFA 43196									
MG-CPM-03 41291			MG-CPM-04 41390 (2)								
			MG-CPM-04 41391	MG-CPM-04 41396							
MG-CPMF 43090			MG-CPMF 43090								
		MG-CPM-13 41790	MG-CPM-13 41791	MG-CPM-13 41791 (2)							
		MG-CPMFA 43196									
MG-CPM-05 41490			MG-CPM-05 41490 (2)								
MG-CPM-01 41094			MG-CPM-01 41094 (2)								
MG-CPM-12 46391											
MG-CPMF 43094			MG-CPMF 43094								
			MG-CPM-04 41390 (2)								
			MG-CPM-04 41391								
	MG-CPM-03 41291										

(2) Marker width < marking's area size - markers must be mounted individually.

			MG-CPMF 43094								
			MG-CPMF 43094								
			MG-CPMF 43094								

SNA series end stop and label holders

BAM2, BADL, BADH	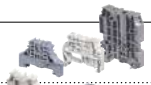	Individual marker		Top and side marking		RC810TT
BADRL	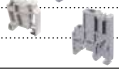	Individual marker		Top marking		MG-CPM 04 41391
BAMH						RC810TT
PEAD (Label holder for BAM2 and BADL)		Label		Top marking		MG-TAPW 49096
PEB (Label holder for BAM2, BADL, BADH, BAMH, BAR and BADRL)						MG-TAA 49198 MG-TAR 45194

MG3 terminal block markers are available in various versions adapted to the usual identification requirements of your terminal blocks.

Individual markers

Strip markers

Strip labels

1SNC160213S0201 - Rev. A

MG-CPM terminal block markers

Blank markers for SNK, SNA and Solution series

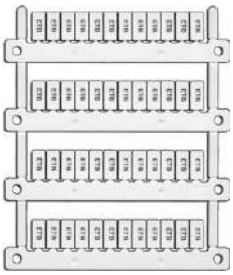

1SNC160131F0014

MG-CPM-13

Description

- Available in different versions to suit all terminal block formats,
- Partially printed marker cards may be re-used to avoid wastage,
- Made of halogen free self-extinguishing polycarbonate,
- Refer to MG3 markers' selection guide for terminal blocks and end stop markers to find the suitable marker for your needs.

Main technical data

Material	Flammability	Temperature range
Polycarbonate	V0	-40°C to +140°C -40°F to +284°F

Ordering details

Spacing mm	Spacing in	Dimensions mm	Dimensions in	Nb. of markers per card	Color	Type	Part Number	SW code		Pkg marker	Weight (1 marker) g
SNK series terminal block markers											
MG-CPM-13											
Individual markers for SNK series terminal blocks, can be strip mounted when marker and terminal block spacing are equal.											
5.2	0.205	5 x 12	0.197 x 0.472	56	White	MG-CPM-13 41790	1SNB041790R0512	113		1960	0.20
					Yellow	MG-CPM-13 41740	1SNB041740R0512	113		1960	0.20
6	0.236	6 x 12	0.236 x 0.472	48	White	MG-CPM-13 41791	1SNB041791R0612	114		1680	0.30
					Yellow	MG-CPM-13 41741	1SNB041741R0612	114		1680	0.30
Support plate											
Included in the MG3 Kit						MG2-ETB 991016	1SNB991016R0000			1	100.00
SNA and Solution series terminal block markers											
MG-CPM-01											
Individual markers, can be strip mounted when marker and terminal block spacing are equal.											
5.1	0.201	5 x 7	0.197 x 0.276	56	White	MG-CPM-01 41094	1SNB041094R0507	13		1960	0.20
Support plate											
Purchased separately						MG2-MTB 991008	1SNB991008R0000			1	149.00
MG-CPM-03											
Individual markers, can be strip mounted when marker and terminal block spacing are equal.											
5	0.197	5 x 10	0.197 x 0.394	56	White	MG-CPM-03 41291	1SNB041291R0510	25		1960	0.20
Support plate											
Included in the MG3 Kit						MG2-QTB 991011	1SNB991011R0000			1	120.00
MG-CPM-04											
Individual markers, can be strip mounted when marker and terminal block spacing are equal.											
8	0.315	5 x 10	0.197 x 0.394	32	White	MG-CPM-04 41390	1SNB041390R0510	42		1680	0.30
					Yellow	MG-CPM-04 41340	1SNB041340R0510	42		1680	0.40
Strip markers											
6	0.236	6 x 10	0.236 x 0.394	48	White	MG-CPM-04 41391	1SNB041391R0610	45		1344	0.20
8	0.315	8 x 10	0.315 x 0.394	36		MG-CPM-04 41396	1SNB041396R0810	48		1120	
Support plate											
Included in the MG3 Kit						MG2-QTB 991011	1SNB991011R0000			1	120.00
MG-CPM-05											
Individual markers											
5	0.197	5 x 10	0.197 x 0.394	56	White	MG-CPM-05 41490	1SNB041490R0510	51		1960	0.40
Support plate											
Purchased separately						MG2-WTB 991004	1SNB991004R0000			1	151.00
MG-CPM-12											
Flexible pitch strip markers											
5 ... 6	0.197 ... 0.236	4.2 x 9	0.165 x 0.354	56	White	MG-CPM-12 46390	1SNB046390R4209	112		1960	0.20
Support plate											
Purchased separately						MG2-WTB 991004	1SNB991004R0000			1	151.00

Refer to selection page for information on strip markers.

1SNC160165S0201

MG-CPMF terminal block markers

Blank strip labels for SNK, SNA and Solution series

1SNC160132F0014

MG-CPMF

Description

- To be directly used on terminal block assembly,
- Available in precut or self-adhesive versions to fit all applications.

Main technical data

Material	Flammability	Temperature range
Rigid PVC	V0	-30°C to +80°C -22°F to +176°F

Ordering details

SNA and Solution series terminal block markers

MG-CPMF

Strip labels for all terminal blocks from the SNA and Solution series

Dimensions mm	Dimensions in	Nb. of markers per card	Color	Type	Part Number	SW code		Pkg marker	Weight (1 marker) g
5.2 x 105	0.205 x 4.134	20	White	MG-CPMF 43094	1SNB043094R0052	551		1000	0.30
7.6 x 105	0.299 x 4.134	12	White	MG-CPMF 43091	1SNB043091R0076	552		600	1.00
10 x 105	0.394 x 4.134	10	White	MG-CPMF 43090	1SNB043090R0010	530		500	1.20

SNK series terminal block markers

MG-CPMFA

Self-adhesive strip labels for all terminal blocks from the SNK series

12 x 105	0.472 x 4.134	8	White	MG-CPMFA 43196	1SNB043196R0012	330		400	2.60
			Yellow	MG-CPMFA 43146	1SNB043146R0012	330		400	2.60

Component and equipment markers

MG-CPMFA

Self-adhesive strip labels for various applications

10 x 105	0.394 x 4.134	10	White	MG-CPMFA 46990	1SNB046990R0010	530		100	6.23

Marking system accessories

MG2-PLT

Support plate

Included in the MG3 Kit		MG2-PLT 991002	1SNB991002R0000			1	148.50

Mounting instruction

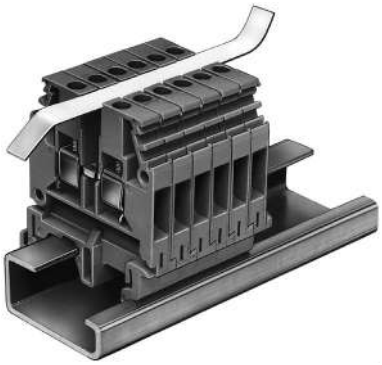

1SNC160166S0201 - Rev. A

MG-CPM terminal block markers

Blank markers for other manufacturers

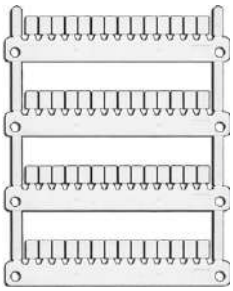

MG-CPM-01

Description

- Available in different versions to suit other manufacturers terminal block formats,
- Partially printed marker cards may be re-used to avoid wastage,
- Made of halogen free self-extinguishing polycarbonate,
- Refer to MG3 markers' selection guide for other manufacturer terminal blocks and end stop markers to find the suitable marker for your needs.

Main technical data

Material	Flammability	Temperature range
Polycarbonate	V0	-40°C to +140°C -40°F to +284°F

Ordering details

Spacing mm	Spacing in	Dimensions mm	Dimensions in	Nb. of markers per card	Color	Type	Part Number	SW code		Pkg marker	Weight (1 marker) g
MG-CPM-01											
Individual markers											
5.1	0.201	5 x 10	0.197 x 0.394	56	White	MG-CPM-01 41090N	1SNB041090R0510	14		1960	0.20
		5 x 15	0.197 x 0.591		White	MG-CPM-01 41091N	1SNB041091R0515	16		1680	0.20
Support plate											
Included in the MG3 Kit						MG2-QTB 991011	1SNB991011R0000			1	120.00
Individual markers											
5.1	0.201	5 x 7	0.197 x 0.276	56	White	MG-CPM-01 41094	1SNB041094R0507	13		1960	0.20
Support plate											
Purchased separately						MG2-MTB 991008	1SNB991008R0000			1	149.00
MG-CPM-02											
Individual markers											
5.1	0.201	5 x 10	0.197 x 0.394	56	White	MG-CPM-02 41190N	1SNB041190R0510	22		1680	0.40
					Yellow	MG-CPM-02 41140N	1SNB041140R0510	22		1680	0.40
Support plate											
Included in the MG3 Kit						MG2-QTB 991011	1SNB991011R0000			1	120.00
MG-CPM-03											
Individual markers											
5	0.197	5 x 10	0.197 x 0.394	56	White	MG-CPM-03 41291	1SNB041291R0510	25		1960	0.20
					White	MG-CPM-03 41293	1SNB041293R0510	25		1960	0.20
Support plate											
Included in the MG3 Kit						MG2-QTB 991011	1SNB991011R0000			1	120.00
MG-CPM-04											
Individual markers											
8	0.315	5 x 10	0.197 x 0.394	32	White	MG-CPM-04 41390	1SNB041390R0510	41		1680	0.30
					Yellow	MG-CPM-04 41340	1SNB041340R0510	41		1680	0.40
Strip markers											
6	0.236	6 x 10	0.236 x 0.394	48	White	MG-CPM-04 41391	1SNB041391R0610	45		1344	0.20
5.2	0.205	5 x 10	0.197 x 0.394		White	MG-CPM-04 41395	1SNB041395R0510	31		1680	0.30
Support plate											
Included in the MG3 Kit						MG2-QTB 991011	1SNB991011R0000			1	120.00
MG-CPM-05											
Individual markers											
5	0.197	5 x 10	0.197 x 0.394	56	White	MG-CPM-05 41490	1SNB041490R0510	51		1960	0.40
Strip markers											
5	0.197	5 x 10	0.197 x 0.394	56	White	MG-CPM-05 41494	1SNB041494R0510	51		1960	0.20
Support plate											
Purchased separately						MG2-WTB 991004	1SNB991004R0000			1	151.00
MG-CPM-06											
Individual markers											
6	0.236	5 x 10	0.197 x 0.394	44	White	MG-CPM-06 41591	1SNB041591R0510	61		1540	0.20
Support plate											
Purchased separately						MG2-STB 991005	1SNB991005R0000			1	158.00

See other manufacturers selection guide at the end of this catalogue

Continue on next page →

1SNC160167S0201

Ordering details

Spacing mm	Spacing in	Dimensions mm	Dimensions in	Nb. of markers per card	Color	Type	Part Number	SW code		Pkg marker	Weight (1 marker) g
← Continuation of previous page											
MG-CPM-07											
Individual markers											
5.2	0.205	5 x 10	0.197 x 0.394	48	White ☐	MG-CPM-07 41691	1SNB041691R0510	71		1680	0.30
Support plate											
Included in the MG3 Kit						MG2-QTB 991011	1SNB991011R0000			1	120.00
MG-CPM-09											
Flexible pitch strip markers											
5 ... 6	0.197 ... 0.236	5 x 10	0.197 x 0.394	56	White ☐	MG-CPM-09 41890	1SNB041890R0510	92		1960	0.20
Support plate											
Purchased separately						MG2-LTB 991013	1SNB991013R0000			1	128.00
MG-CPM-10											
Individual markers											
5.5	0.217	5 x 12	0.197 x 0.472	48	White ☐	MG-CPM-10 46192	1SNB046192R0512	101		1680	0.30
Support plate											
Purchased separately						MG2-CTB 991006	1SNB991006R0000			1	156.00
MG-CPM-12											
Flexible pitch strip markers											
5 ... 6	0.197 ... 0.236	4.2 x 9	0.165 x 0.354	56	White ☐	MG-CPM-12 46390	1SNB046390R4209	112		1960	0.20
		4.2 x 6	0.165 x 0.236		White ☐	MG-CPM-12 46391	1SNB046391R4206	111		1960	0.20
Support plate											
Purchased separately						MG2-WTB 991004	1SNB991004R0000			1	151.00

See other manufacturers selection guide at the end of this catalogue

Mounting instruction

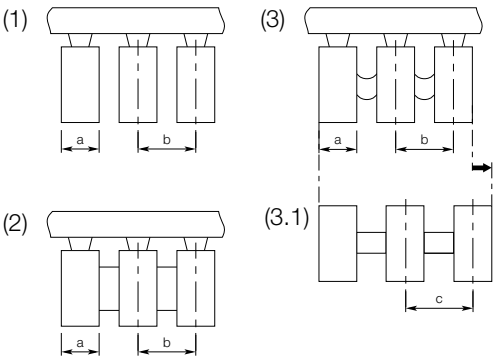

(1) Individual marker
(2) Strip marker
(3) Flexible pitch strip marker
(3.1) Flexible pitch strip marker with pitch aligned to terminal block spacing

a = marker width
b = marker spacing
c = extended marker spacing

1SNC160167S0201

RC810TT end stop markers

Blank markers for BAM2, BADL, BADH

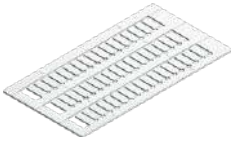

1SNC160246F0014

RC810TT

Description

- Blank marker card designed for high marking quality,
- Excellent marking durability in the most severe environments,
- Made of rigid polycarbonate.

Main technical data

Material	Flammability	Temperature range
Polycarbonate	V0	-50°C to +120°C -58°F to +248°F

Ordering details

Dimensions mm	Dimensions in	Maximum printed digits Hor.	Maximum printed digits Vert.	Nb. of markers per card	Color	Type	Part Number	SW code		Pkg card	Weight (1 card) g
SNA and Solution series markers											
RC810TT											
10 x 8	0.394 x 0.315	4	7	30	White	RC810TT	1SNA234600R1000	138		22	12.00
					Yellow	RC810TT-YL	1SNA234700R1400	138		22	12.00

Marking system accessories

MG2-ABM

Support plate

Support template for terminal block markers RCTT and MC series	MG2-ABM 991012	1SNB991012R0000			1	146.00

Compatible end stops

BAM2
1SNA206351R1600

BADL
1SNA399903R0200

BADH
1SNA116900R2700

BAMH
1SNA114836R0000

1SNC160187S0201 - Rev. B

LH, LH-R1 end stop label holders
For MG-TAA and MG-TAR labels

1SNK160210F0014

Description

- Easily identify your terminal blocks assembly with white or yellow labels,
- Adjustable in height for best visibility,
- Compatible with all SNK end stops.

Main technical data

Material	Flammability	Temperature range
Polyamide	V0	-55°C to +110°C -67°F to +230°F

Ordering details

Spacing mm	Spacing in	Dimensions mm	Dimensions in	Color	Type	Part Number	SW code		Pkg pce	Weight (1 pce) g
For MG-TAA 49498 and MG-TAA 49448										
LH										
10	0.394	8.8 x 30	0.35 x 1.18	Dark Grey	LH	1SNK900605R0000			50	0.60
For MG-TAA 49198, MG-TAA 49148 and MG-TAR 45194										
LH-R1										
19.5	0.768	17.9 x 35.65	0.70 x 1.40	Dark Grey	LH-R1	1SNK900607R0000			50	1.10

LH

LH-R1

Dimensions given apply to the labelling area.

Compatible end stops

BAM4
1SNK900001R0000

BAZ1
1SNK900002R0000

BAZH1
1SNK900102R0000

1SNC160180S0201

PEB end stop label holders
For MG-TAA and MG-TAR labels

1SNC160200F0014

PEB

Description

- To be used for terminal block assembly identification,
- Direct insertion onto end stops from SNA series.

Main technical data

Material	Flammability	Temperature range
Polyamide (PEB) PVC (EPR1)	V0	-55°C to +110°C -67°F to +230°F

Ordering details

Dimensions mm	Dimensions in	Color	Type	Part Number		Pkg pce	Weight (1 pce) g
PEB							
Label holder for end stop 35 x 17 mm *1.378 x .669 in*, to be snapped onto end stop							
18 x 35.5	0.709 x 1.378	Grey	PEB	1SNA113077R1100		50	1.70
EPR1							
Card of 54 PVC protective covers							
17.5 x 35	0.689 x 1.378	Transparent	EPR1	1SNA178431R2200		1	0.054
PEBM							
"All in one": PEB marker holder with marker and protection included							
			PEBM	1SNA113084R0100		50	2.80

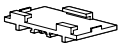

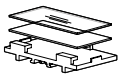

Compatible end stops

BAM2
1SNA206351R1600

BADL
1SNA399903R0200

BADH
1SNA116900R2700

BAMH
1SNA114836R0000

BAR
1SNA164519R2400

BADRL
1SNA199420R2100

1SNC160188S0201 - Rev. A

PEAD end stop label holders
For MG-TAPW49096 label

1SNC160058F0014

PEAD

Description

- Easily identify your terminal block assemblies with white or yellow labels,
- Adjustable in height for best visibility,
- Compatible with MG-TAPW 49096 and 49046,
- Compatible with BAM2 and BADL SNA series end stops.

Main technical data

Material	Flammability
Polyamide	V0

Ordering details

Dimensions mm	Dimensions in	Color	Type	Part Number		Pkg pce	Weight (1 pce) g
PEAD							
Label holder for end stop, compatible with MG-TAPW49096 markers and EPR2 cover.							
9 x 29	0.354 x 1.142	Grey	PEAD	1SNA399719R1000		20	0.78
EPR2							
Card of 20 covers compatible with MG-TAPW 49096 and 49046.							
9 x 29	0.354 x 1.142	Transparent	EPR2	1SNA399726R0700		1	4.00

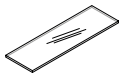

Dimensions given apply to the labelling area.

Compatible end stops

BAM2
1SNA206351R1600

BADL
1SNC160189S0201 - Rev. A
1SNA399903R0200

Fast and direct wire and cable identification

Save time on your cable identification job by using direct insertion cable markers MG-TDM, MG-TDMO or MG-ETF. Directly print the marker and attached it to the cable of your choice.

MG-TDM
Slide-on cable marker

MG-TDMO
Clip-on cable marker

MG-ETF
Tie-on cable marker

Evolutive and protected wire and cable identification

Each individual label and label holder is easily detached from the stem for installation onto cable. The printed label in its holder is perfectly protected over time.

MG-TPMF
Easy entry thanks to profiled shape

MG-TPM
For more efficiency, stems can be cable tied together using the holes provided

For fast and easy cable identification

Markers directly mounted on wires and cables

Wire external diameter mm	Wire external diameter in	Conductor section mm²	Marker length mm	Marker length in	Marker color		Slide-on cable marker MG-TDM	Clip-on cable marker MG2-TDMO
Ø 1.6 ... 3.25	Ø 0.06 ... 0.12	0.5 ... 1.5	12	0.472	White	☐	MG-TDM-01 49190	–
					Yellow	☐	MG-TDM-01 40140	–
			16	0.630	White	☐	MG-TDM-01 49191	–
					Yellow	☐	MG-TDM-01 40141	–
Ø 2 ... 2.9	Ø 0.07 ... 0.11	0.5 ... 1.5	12	0.472	White	☐	–	MG2-TDMO-01 40390
					Yellow	☐	–	MG2-TDMO-01 40340
			16	0.630	White	☐	–	MG2-TDMO-01 40391
					Yellow	☐	–	MG2-TDMO-01 40341
Ø 2.9 ... 3.5	Ø 0.11 ... 0.14	1.5 ... 2.5	12	0.472	White	☐	–	MG2-TDMO-02 40490
					Yellow	☐	–	MG2-TDMO-02 40440
			16	0.630	White	☐	–	MG2-TDMO-02 40491
					Yellow	☐	–	MG2-TDMO-02 40441
Ø 2 ... 4.4	Ø 0.07 ... 0.17	1 ... 6	12	0.472	White	☐	MG-TDM-02 40290	–
					Yellow	☐	MG-TDM-02 40240	–
			16	0.630	White	☐	MG-TDM-02 40291	–
					Yellow	☐	MG-TDM-02 40241	–
Ø 4 ... 4.6	Ø 0.16 ... 0.18	4 ... 6	12	0.472	White	☐	–	MG2-TDMO-03 40590
					Yellow	☐	–	MG2-TDMO-03 40540
			16	0.630	White	☐	–	MG2-TDMO-03 40591
					Yellow	☐	–	MG2-TDMO-03 40541

1SNC160214S0201

For evolutive identification

Marker holders + slide-in markers

Wire external diameter mm	Wire external diameter in	Conductor section mm²	Label holder length mm	Label holder length in	Slide-on cable marker holder for PVC labels PM	Compatible labels	Slide-on cable marker holder for ABS labels PMF	Compatible labels
Ø 1.3 ... 2.2	Ø 0.051 ... 0.087	0.25 ... 0.5	10	0.394	–	–	PMF-00 90000	MG-TPMF 42090B
			12	0.472	–	–	PMF-00 90020	MG-TPMF 42091B
			15	0.591	–	–	PMF-00 90010	MG-TPMF 42092B
Ø 2 ... 3.7	Ø 0.079 ... 0.146	0.5 ... 2.5	10	0.394	PM-01 50100	MG-TPM 40090	PMF-01 90100	MG-TPMF 42090B
			12	0.472	PM-01 50110	MG-TPM 40091	PMF-01 90110	MG-TPMF 42091B
			15	0.591	PM-01 50120	MG-TPM 40092	PMF-01 90120	MG-TPMF 42092B
Ø 3.5 ... 4.3	Ø 0.138 ... 0.169	2.5 ... 4	10	0.394	PM-02 50200	MG-TPM 40090	PMF-02 90200	MG-TPMF 42090B
			12	0.472	PM-02 50210	MG-TPM 40091	PMF-02 90210	MG-TPMF 42091B
			15	0.591	PM-02 50220	MG-TPM 40092	PMF-02 90220	MG-TPMF 42092B
Ø 4 ... 6.3	Ø 0.157 ... 0.248	4 ... 10	10	0.394	PM-03 50300	MG-TPM 40090	PMF-03 90300	MG-TPMF 42090B
			12	0.472	PM-03 50310	MG-TPM 40091	PMF-03 90310	MG-TPMF 42091B
			15	0.591	PM-03 50320	MG-TPM 40092	PMF-03 90320	MG-TPMF 42092B
Ø 6 ... 10	Ø 0.236 ... 0.394	10 ... 25	10	0.394	PM-04 50400	MG-TPM 40090	PMF-04 90400	MG-TPMF 42090B
			12	0.472	PM-04 50410	MG-TPM 40091	PMF-04 90410	MG-TPMF 42091B
			15	0.591	PM-04 50420	MG-TPM 40092	PMF-04 90420	MG-TPMF 42092B
Ø 9 ... 15	Ø 0.354 ... 0.591	25 ... 70	10	0.394	PM-05 50500	MG-TPM 40090	PMF-05 90500	MG-TPMF 42090B
			12	0.472	PM-05 50510	MG-TPM 40091	PMF-05 90510	MG-TPMF 42091B
			15	0.591	PM-05 50521	MG-TPM 40092	PMF-05 90520	MG-TPMF 42092B
Ø 14 ... 26	Ø 0.551 ... 1.024	70 ... 240	10	0.394	PM-06 50600	MG-TPM 40090	–	–
			12	0.472	PM-06 50610	MG-TPM 40091	–	–
			15	0.591	PM-06 50620	MG-TPM 40092	–	–

Label holders are given for biggest packaging. For smaller packaging see product page. Compatible labels are given in White color, see product page for more colors.

For identification of thick tubes

Tie-on markers / label holders

Marker / Marker holder length mm	Marker / Marker holder length in	Marker color	Marker holder color	MG-ETF	PM-ET	Compatible marker	PMF-ET	Compatible marker
13 x 57	0.512 x 2.244	White	–	MG-ETF 54192	–	–	–	–
		Yellow	–	MG-ETF 54142	–	–	–	–
12	0.472	White	Transparent	–	PM-ET 53010	MG-TPM 40091	–	–
15	0.591	White	Transparent	–	PM-ET 53020	MG-TPM 40092	PMF-ET 63020	MG-TPMF 42092B

1SNC160214S0201

MG-TDM wire and cable markers

Slide-on cable blank markers

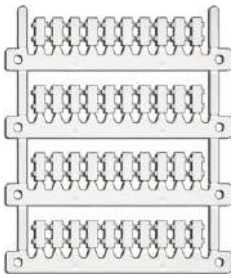

1SNC160117F0014

MG-TDM-01

Description

- To be directly printed and slided onto the wire,
- Partially printed marker cards may be re-used to avoid wastage,
- Made of rigid polycarbonate.

Main technical data

Material	Flammability	Temperature range
Polycarbonate	V0	-40°C to +140°C -40°F to +284°F

Ordering details

Dimensions mm	Dimensions in	Nb. of markers per card	Color	Type	Part Number	SW code		Pkg marker	Weight (1 marker) g
Cable Ø 1.6-3.25 mm *0.06-0.12 in* Section 0.5-1.5 mm²									
MG-TDM-01 Length 12 mm *0.472 in*									
4 x 12	0.157 x 0.472	66	White	MG-TDM-01 40190	1SNB040190R0412	121		1320	0.30
			Yellow	MG-TDM-01 40140	1SNB040140R0412	121		1320	0.30
Support plate									
Purchased separately				MG2-PTD 991007	1SNB991007R0000			1	126.00
MG-TDM-01 Length 16 mm *0.630 in*									
4 x 16	0.157 x 0.630	40	White	MG-TDM-01 40191	1SNB040191R0416	123		800	0.30
			Yellow	MG-TDM-01 40141	1SNB040141R0416	123		800	0.30
Support plate									
Purchased separately				MG2-PTM 991010	1SNB991010R0000			1	116.00
Cable Ø 2-4.4 mm *0.07-0.17 in* Section 1-6 mm²									
MG-TDM-02 Length 12 mm *0.472 in*									
4 x 12	0.157 x 0.472	66	White	MG-TDM-02 40290	1SNB040290R0412	122		1056	0.30
			Yellow	MG-TDM-02 40240	1SNB040240R0412	122		1056	0.30
Support plate									
Purchased separately				MG2-PTD 991007	1SNB991007R0000			1	126.00
MG-TDM-02 Length 16 mm *0.630 in*									
4 x 16	0.157 x 0.630	40	White	MG-TDM-02 40291	1SNB040291R0416	124		640	0.40
			Yellow	MG-TDM-02 40241	1SNB040241R0416	124		640	0.40
Support plate									
Purchased separately				MG2-PTM 991010	1SNB991010R0000			1	116.00

Mounting instruction

1SNC160168S0201

MG2-TDMO wire and cable markers

Clip-on cable blank markers

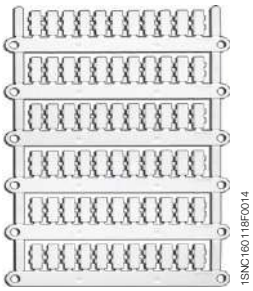

MG2-TDMO-01

Description

- To be directly printed and clip onto the wire,
- Partially printed marker cards may be re-used to avoid wastage,
- Made of rigid polycarbonate.

Main technical data

Material	Flammability	Temperature range
Polycarbonate	V0	-40°C to +140°C -40°F to +284°F

Ordering details

Dimensions mm	Dimensions in	Nb. of markers per card	Color	Type	Part Number	SW code		Pkg marker	Weight (1 marker) g
Cable Ø 2-2.9 mm *0.07-0.11 in* Section 0.5-1.5 mm²									
MG2-TDMO-01									
4 x 12	0.157 x 0.472	40	White	MG2-TDMO-01 40390	1SNB040390R0412	125		880	0.30
			Yellow	MG2-TDMO-01 40340	1SNB040340R0412	125		800	0.30
4 x 16	0.157 x 0.630		White	MG2-TDMO-01 40391	1SNB040391R0416	128		880	0.30
			Yellow	MG2-TDMO-01 40341	1SNB040341R0416	128		800	0.30
Cable Ø 2.9-3.5 mm *0.11-0.14 in* Section 1.5-2.5 mm²									
MG2-TDMO-02									
4 x 12	0.157 x 0.472	40	White	MG2-TDMO-02 40490	1SNB040490R0412	126		640	0.40
			Yellow	MG2-TDMO-02 40440	1SNB040440R0412	126		640	0.40
4 x 16	0.157 x 0.630		White	MG2-TDMO-02 40491	1SNB040491R0416	129		640	0.40
			Yellow	MG2-TDMO-02 40441	1SNB040441R0416	129		640	0.40
Cable Ø 4-4.6 mm *0.16-0.18 in* Section 4-6 mm²									
MG2-TDMO-03									
4 x 12	0.157 x 0.472	40	White	MG2-TDMO-03 40590	1SNB040590R0412	127		560	0.40
			Yellow	MG2-TDMO-03 40540	1SNB040540R0412	127		560	0.40
4 x 16	0.157 x 0.630		White	MG2-TDMO-03 40591	1SNB040591R0416	130		560	0.40
			Yellow	MG2-TDMO-03 40541	1SNB040541R0416	130		560	0.40

Marking system accessories

MG2-PTM

Support plate

Purchased separately		MG2-PTM 991010	1SNB991010R0000			1	116.00

Mounting instruction

Compatible holders

UMH

UMH wire and cable marker holders
Universal wire marker holders

1SNK160360F0014

UMH

Description

- Compatible with most of the wire markers available on the market (wire markers not supplied with UMH),
- Quickly fit to any SNK terminal blocks and accessories: strip mounting of 10 parts for 5.2 mm *0.205 in* spacing, unitary mounting for other spacings

Main technical data

Material	Flammability	Temperature range
Polyamide	V0	-55°C to +110°C -67°F to +230°F

Ordering details

Dimensions mm	Dimensions in	Nb. of markers per card	Color	Type	Part Number		Pkg pce	Weight (1 pce) g
14.5 x 6	0.571 x 0.236	10	Grey	UMH	1SNK900611R0000		10	0.20

Mounting instruction

Install the UMH on the terminal blocks (strip mounting) and slide on the wire markers.

1SNC160186S0201

MG-ETF wire and cable markers

Tie-on cable precut blank labels

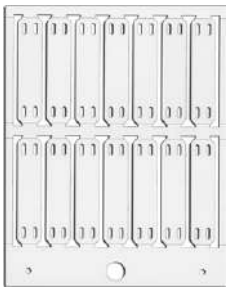

1SNC160119F0014

MG-ETF

Description

- Recommended for marking large diameter cables, hoses, tubes and conduits,
- To be used with cable ties (max. width 4.8 mm *0.19 in*),
- Print area 15 x 20 mm 0.59 x *0.79 in*,
- Made of rigid PVC.

Main technical data

Material	Flammability	Temperature range
Rigid PVC	V0	-30°C to +80°C -22°F to +176°F

Ordering details

Dimensions mm	Dimensions in	Nb. of markers per card	Color	Type	Part Number	SW code		Pkg marker	Weight (1 marker) g
13 x 57	0.512 x 2.244	14	White	MG-ETF 54192	1SNB054192R1357	581		700	0.70
			Yellow	MG-ETF 54142	1SNB054142R1357	581		700	0.70

Marking system accessories

MG2-PLT

Support plate

Included in the MG3 Kit		MG2-PLT 991002	1SNB991002R0000			1	148.50

Mounting instruction

1SNC160170S0201

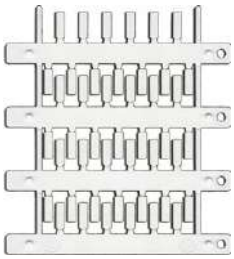

MG-TPM

Description

- To be slided into PM holder,
- For cable up to 240 mm²,
- PM holders can be directly inserted on the markers without removing them from the stems,
- Made of rigid ABS.

Main technical data

Material	Flammability	Temperature range
Acrylonitrile Butadienne Styrene (ABS)	V0	-30°C to +80°C -22°F to +176°F

Ordering details

Dimensions mm	Dimensions in	Nb. of markers per card	Color	Type	Part Number	SW code		Pkg marker	Weight (1 marker) g
MG-TPM									
4 x 10	0.157 x 0.394	45	White ☐	MG-TPM 40090	1SNB040090R0410	1		2250	0.30
4 x 12	0.157 x 0.472		White ☐	MG-TPM 40091	1SNB040091R0412	2		2250	0.30
4 x 15	0.157 x 0.591		White ☐	MG-TPM 40092	1SNB040092R0415	3		2250	

Marking system accessories

MG2-PWC

Support plate

Included in the MG3 Kit				MG2-PWC 991000	1SNB991000R0000			1	148.50

Compatible holders

PM

PM-ET

PM-AC

1SNC160171S0201

PM, PM-ET and PM-AC transparent marker holders
For MG-TPM markers

1SNC160251F0014

PM

Description

- Compatible with MG-TPM markers,
- Made of plasticised PVC.

Main technical data

Material	Flammability	Temperature range
PVC	V0	-40°C to +90°C -40°F to +194°F

Ordering details

Wire ext. diameter mm	Wire ext. diameter in	Wire section mm²	Holder length mm	Holder length in	Color	Type	Part Number		Pkg pce	Weight (1 pce) g
For cable mounting										
PM										
Profiled transparent holder to allow each type to accommodate a range of cable sizes										
2 ... 3.7	0.079 ... 0.146	0.5 ... 2.5	10	0.394	Transparent ☑	PM-01 50100	1SNB050100R0000		6000	0.20
					Transparent ☑	PM-01 50102	1SNB050102R0001		2000	0.20
					Transparent ☑	PM-01 50102-HF	1SNB050102R0002		2000	0.10
			12	0.472	Transparent ☑	PM-01 50110	1SNB050110R0000		5000	0.20
			15	0.591	Transparent ☑	PM-01 50120	1SNB050120R0000		4000	0.20
					Transparent ☑	PM-01 50122	1SNB050122R0000		1000	0.20
3.5 ... 4.3	0.138 ... 0.169	2.5 ... 4	10	0.394	Transparent ☑	PM-02 50200	1SNB050200R0000		4000	0.30
					Transparent ☑	PM-02 50202	1SNB050202R0000		1000	0.30
			12	0.472	Transparent ☑	PM-02 50210	1SNB050210R0000		4000	0.30
					Transparent ☑	PM-02 50212	1SNB050212R0000		1000	0.30
			15	0.591	Transparent ☑	PM-02 50220	1SNB050220R0000		3000	0.35
					Transparent ☑	PM-02 50222	1SNB050222R0000		1000	0.35
4 ... 6.3	0.157 ... 0.248	4 ... 10	10	0.394	Transparent ☑	PM-03 50300	1SNB050300R0000		3000	0.30
					Transparent ☑	PM-03 50302	1SNB050302R0000		1000	0.30
			12	0.472	Transparent ☑	PM-03 50310	1SNB050310R0000		2000	0.40
					Transparent ☑	PM-03 50312	1SNB050312R0000		500	0.40
			15	0.591	Transparent ☑	PM-03 50320	1SNB050320R0000		2000	0.45
					Transparent ☑	PM-03 50322	1SNB050322R0000		500	0.45
6 ... 10	0.236 ... 0.394	10 ... 25	10	0.394	Transparent ☑	PM-04 50400	1SNB050400R0000		2000	0.45
					Transparent ☑	PM-04 50402	1SNB050402R0000		500	0.45
			12	0.472	Transparent ☑	PM-04 50410	1SNB050410R0000		1000	0.50
					Transparent ☑	PM-04 50411	1SNB050411R0000		500	0.50
			15	0.591	Transparent ☑	PM-04 50420	1SNB050420R0000		1000	0.60
					Transparent ☑	PM-04 50421	1SNB050421R0000		500	0.60
9 ... 15	0.354 ... 0.591	25 ... 70	10	0.394	Transparent ☑	PM-05 50500	1SNB050500R0000		500	0.70
			12	0.472	Transparent ☑	PM-05 50510	1SNB050510R0000		500	0.80
			15	0.591	Transparent ☑	PM-05 50521	1SNB050521R0000		250	1.10
14 ... 26	0.551 ... 1.024	70 ... 240	10	0.394	Transparent ☑	PM-06 50600	1SNB050600R0000		500	1.30
			12	0.472	Transparent ☑	PM-06 50610	1SNB050610R0000		250	1.40
			15	0.591	Transparent ☑	PM-06 50620	1SNB050620R0000		250	2.70

PM-01

PM-ET

Tie-on transparent holder for longitudinal mounting on cables, hoses, tubes and conduit (tie width max 6 mm *0.236 in*)

			12	0.472	Transparent ☑	PM-ET 53010	1SNB053010R0000		2000	0.40
			15	0.591	Transparent ☑	PM-ET 53020	1SNB053020R0000		2000	0.50

PM-ET

For surface mounting

PM-AC

Self-adhesive transparent holder to be used over all plane surfaces

			10	0.394	Transparent ☑	PM-AC 51000N	1SNB051000R0000		5000	0.20
			12	0.472	Transparent ☑	PM-AC 51010N	1SNB051010R0000		4000	0.20
			15	0.591	Transparent ☑	PM-AC 51020N	1SNB051020R0000		4000	0.30

PM-AC

Use holders only with designated cable marker of the same or a shorter length.

1SNC160172S0201 - Rev. A

MG-TPMF wire and cable markers
Slide-in precut blank labels

1SNC160115F0014

MG-TPMF

Description
- To be slided into PMF holder,
- For wire and cable up to 70 mm²,
- Made of rigid PVC.

Main technical data

Material	Flammability	Temperature range
Rigid PVC	V0	-30°C to +80°C -22°F to +176°F

Ordering details

Dimensions mm	Dimensions in	Nb. of markers per card	Color	Type	Part Number	SW code		Pkg marker	Weight (1 marker) g
MG-TPMF									
4 x 10	0.157 x 0.394	112	White ☐	MG-TPMF 42090B	1SNB042090R0410	502		5600	0.10
4 x 12	0.157 x 0.472	80	White ☐	MG-TPMF 42091B	1SNB042091R0412	505		4000	0.10
4 x 15	0.157 x 0.591		White ☐	MG-TPMF 42092B	1SNB042092R0415	503		4000	0.10

Marking system accessories

MG2-PLT

Support plate

Included in the MG3 Kit				MG2-PLT 991002	1SNB991002R0000			1	148.50

Compatible holders

PMF

PMF-ET

PMF-AC

1SNC160173S0201

PMF, PMF-ET and PMF-AC transparent marker holders
For MG-TPMF markers

1SNC160251F0014

PMF-00

Description

- Compatible with MG-TPMF markers,
- Made of plasticised PVC.

Main technical data

Material	Flammability	Temperature range
PVC	V0	-40°C to +90°C -40°F to +194°F

Ordering details

Wire ext. diameter mm	Wire ext. diameter in	Wire section mm²	Holder length mm	Holder length in	Color	Type	Part Number		Pkg pce	Weight (1 pce) g

For cable mounting

PMF

Profiled transparent holder to allow each type to accommodate a range of cable sizes

1.3 ... 2.2	0.051 ... 0.087	0.25 ... 0.5	10	0.394	Transparent ☐	PMF-00 90000	1SNB090000R0000		8000	0.10
			12	0.472	Transparent ☐	PMF-00 90010	1SNB090010R0000		7000	0.10
			15	0.591	Transparent ☐	PMF-00 90020	1SNB090020R0000		6000	0.10
2 ... 3.7	0.079 ... 0.146	0.5 ... 2.5	10	0.394	Transparent ☐	PMF-01 90100	1SNB090100R0000		6000	0.20
			12	0.472	Transparent ☐	PMF-01 90110	1SNB090110R0000		5000	0.20
			15	0.591	Transparent ☐	PMF-01 90120	1SNB090120R0000		4000	0.20
3.4 ... 4.3	0.134 ... 0.169	2.5 ... 4	10	0.394	Transparent ☐	PMF-02 90200	1SNB090200R0000		4000	0.20
			12	0.472	Transparent ☐	PMF-02 90210	1SNB090210R0000		4000	0.30
			15	0.591	Transparent ☐	PMF-02 90220	1SNB090220R0000		3000	0.30
4 ... 6.3	0.157 ... 0.248	4 ... 10	10	0.394	Transparent ☐	PMF-03 90300	1SNB090300R0000		3000	0.40
			12	0.472	Transparent ☐	PMF-03 90310	1SNB090310R0000		2000	0.40
			15	0.591	Transparent ☐	PMF-03 90320	1SNB090320R0000		2000	0.50
6 ... 10	0.236 ... 0.394	10 ... 25	10	0.394	Transparent ☐	PMF-04 90400	1SNB090400R0000		2000	0.40
			12	0.472	Transparent ☐	PMF-04 90410	1SNB090410R0000		1000	0.60
			15	0.591	Transparent ☐	PMF-04 90420	1SNB090420R0000		1000	0.70
9 ... 15	0.354 ... 0.591	25 ... 70	10	0.394	Transparent ☐	PMF-05 90500	1SNB090500R0000		500	0.90
			12	0.472	Transparent ☐	PMF-05 90510	1SNB090510R0000		500	1.10
			15	0.591	Transparent ☐	PMF-05 90520	1SNB090520R0000		250	1.40

PMF-ET

Tie-on transparent holder for longitudinal mounting on cables, hoses, tubes and conduit (tie width max 6 mm *0.236 in*)

			15	0.591	Transparent ☐	PMF-ET 63020	1SNB063020R0000		2000	0.40

For surface mounting

PMF-AC

Self-adhesive transparent holder to be used over all plane surfaces

			10	0.394	Transparent ☐	PMF-AC 66000N	1SNB066000R0000		5000	0.20
			12	0.472	Transparent ☐	PMF-AC 66010N	1SNB066010R0000		4000	0.20
			15	0.591	Transparent ☐	PMF-AC 66020N	1SNB066020R0000		4000	0.30
			20	0.787	Transparent ☐	PMF-AC 66040N	1SNB066040R0000		4000	0.30

Use holders only with designated cable marker of the same or a shorter length.

1SNC160174S0201

MG-TAA component and equipment markers

Self-adhesive precut blank labels

1SNC160139F0014

MG-TAA

Description

- To be used for external marking of components and equipment,
- Direct application on suitable surfaces (self-adhesive),
- Made of rigid PVC.

Main technical data

Material	Flammability	Temperature range
Rigid PVC	V0	-30°C to +80°C -22°F to +176°F

Ordering details

Dimensions mm	Dimensions in	Nb. of markers per card	Color	Type	Part Number	SW code		Pkg marker	Weight (1 marker) g
7 x 20	0.276 x 0.787	60	White	MG-TAA 49196	1SNB049196R0720	179		1500	0.30
8 x 17	0.315 x 0.669	72	White	MG-TAA 49493	1SNB049493R0817	194		1800	0.30
8.5 x 30	0.335 x 1.181	33	White	MG-TAA 49498	1SNB049498R8530	720		825	0.55
			Yellow	MG-TAA 49448	1SNB049448R8530	720		825	0.55
9 x 15	0.354 x 0.591	77	White	MG-TAA 49397N	1SNB049397R0915	961		1925	0.30
9 x 20	0.354 x 0.787	55	White	MG-TAA 49190N	1SNB049190N0920	962		1375	0.40
9 x 35	0.354 x 1.378	33	White	MG-TAA 49191N	1SNB049191R0935	964		825	0.60
15 x 27	0.591 x 1.063	28	White	MG-TAA 49193N	1SNB049193R1527	966		700	0.70
			Yellow	MG-TAA 49143N	1SNB049143R1527	966		700	0.70
15 x 44	0.591 x 1.732	12	White	MG-TAA 49298	1SNB049298R1544	854		300	1.20
15 x 49	0.591 x 1.929	14	White	MG-TAA 49194N	1SNB049194R1549	967		350	1.40
			Yellow	MG-TAA 49144N	1SNB049144R1549	967		350	1.50
15 x 67	0.591 x 2.638	7	White	MG-TAA 49195N	1SNB049195R1567	968		175	2.80
			Yellow	MG-TAA 49145N	1SNB049145R1567	968		175	2.80
17 x 35	0.669 x 1.378	18	White	MG-TAA 49198	1SNB049198R1735	711		450	0.91
			Yellow	MG-TAA 49148	1SNB049148R1735	711		450	0.91

Marking system accessories

MG2-PLT

Support plate

Included in the MG3 Kit		MG2-PLT 991002	1SNB991002R0000			1	148.50

Mounting instruction

AF09 contactor with MG-TAA 49196 marker

Compatible holders

LH
(only for MG-TAA 49498 and 49448)

LH-R1
(only for MG-TAA 49198 and 49148)

PEB
(only for MG-TAA 49198 and 49148)

1SNC160179S0201 - Rev. B

MG-VYT component and equipment markers

Self-adhesive precut blank labels

1SNC160140F0014

MG-VYT 46915

Description

- To be used for external or internal marking of components and equipment,
- Direct application on suitable surfaces (self-adhesive),
- Made of dielectric PVC film.

Main technical data

Material	Flammability	Temperature range
Dielectric PVC film	V0	-40°C to +80°C -40°F to +176°F

Ordering details

Dimensions mm	Dimensions in	Nb. of markers per card	Color	Type	Part Number	SW code		Pkg marker	Weight (1 marker) g
For internal marking									
6 x 15	0.236 x 0.591	105	White	MG-VYT 46915	1SNB046915R0615	181		5250	0.10
			Yellow	MG-VYT 46415	1SNB0464 15R0615	181		5250	
			Grey	MG-VYT 46815	1SNB046815R0615	181		5250	
7 x 10	0.276 x 0.394	120	Grey	MG-VYT 46891	1SNB046891R0710	191		6000	0.10
7 x 15	0.276 x 0.591	60	Grey	MG-VYT 46828	1SNB046828R0715	182		3000	0.10
7 x 20	0.276 x 0.787		White	MG-VYT 46935	1SNB046935R0720	179		3000	0.10
8 x 21	0.315 x 0.827		Grey	MG-VYT 46824	1SNB046824R0821	196		3000	0.10
9 x 15	0.354 x 0.591	70	White	MG-VYT 44895	1SNB044895R0915	161		3500	0.10
			Yellow	MG-VYT 44845	1SNB044845R0915	161		3500	0.10
9 x 20	0.354 x 0.787	55	White	MG-VYT 44896N	1SNB044896R0920	162		2750	0.10
			Grey	MG-VYT 46896N	1SNB046896R0920	162		2750	0.10
9 x 35	0.354 x 1.378	33	White	MG-VYT 46910N	1SNB046910R0935	164		1650	0.10
For external marking									
52 x 107	2.047 x 4.213	2	Grey	MG-VYT 46811	1SNB046811R0052	204		100	2.40
For Allen Bradley internal marking									
5 x 12	0.197 x 0.472	120	White	MG-VYT 46927	1SNB046927R0512	195		6000	
For Telemecanique									
8 x 17	0.315 x 0.669	72	Yellow	MG-VYT 46423	1SNB046423R0817	194		3600	0.10
For Telemecanique internal marking									
8 x 17	0.315 x 0.669	72	White	MG-VYT 46923	1SNB046923R0817	194		3600	0.10
			Grey	MG-VYT 46823	1SNB046823R0817	194		3600	0.10

Marking system accessories

MG2-PLT

Support plate

Included in the MG3 Kit		MG2-PLT 991002	1SNB991002R0000			1	148.50

Mounting instruction

AF09 contactor with MG-VYT 46935 marker

1SNC160181S0201

MG-17.5A component and equipment markers

Self-adhesive precut blank labels

1SNC160265F0014

MG-17.5-A 990824

Description

- Used for marking modular components,
- Direct application on suitable surfaces (self-adhesive),
- Made of rigid PVC.

Main technical data

Material	Flammability	Temperature range
Rigid PVC	V0	-30°C to +80°C -22°F to +176°F

Ordering details

Dimensions mm	Dimensions in	Nb. of markers per card	Color	Type	Part Number	SW code		Pkg marker	Weight (1 marker) g
15 x 107.5	0.591 x 4.232	7	White	MG-17.5-A 990824	1SNB990824R0015	929		175	2.80
			Yellow	MG-17.5-A 990826	1SNB990826R0015	929		175	1.00

Marking system accessories

MG2-PLT

Support plate

Included in the MG3 Kit		MG2-PLT 991002	1SNB991002R0000			1	148.50

Mounting instruction

1SNC160183S0201 - Rev. C

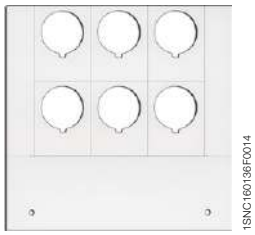

MG-PTS 15090

Description

- To be used for Ø 22.5 mm *0.886 in* or Ø 31 mm *1.220 in* push buttons identification,
- Direct application on suitable surfaces,
- Made of rigid PVC.

Main technical data

Material	Flammability	Temperature range
Rigid PVC	V0	-30°C to +80°C -22°F to +176°F

Ordering details

Dimensions mm	Dimensions in	Nb. of markers per card	Color	Type	Part Number	SW code		Pkg marker	Weight (1 marker) g
40 x 30	1.575 x 1.181	6	White ☐	MG-PTS 15090	1SNB015090R4030	1000		300	1.40

Marking system accessories

MG2-PLT

Support plate

Included in the MG3 Kit		MG2-PLT 991002	1SNB991002R0000			1	148.50

Mounting instruction

1SNC160184S0201 - Rev. A

1SNC160134F0014

MG-TAP

Description

- Versatile precut label used to identify a wide range of devices : modular, component, push button, etc.,
- Can be used with legend rail RTA-TAP,
- Made of rigid PVC.

Main technical data

Material	Flammability	Temperature range
Rigid PVC	V0	-30°C to +80°C -22°F to +176°F

Ordering details

Dimensions mm	Dimensions in	Nb. of markers per card	Color	Type	Part Number	SW code		Pkg marker	Weight (1 marker) g
8.2 mm *0.323 in* width									
8.2 x 27	0.323 x 1.063	44	White	MG-TAP 47096	1SNB047096R0827	807		2200	0.30
15 mm *0.591 in* width									
15 x 27	0.591 x 1.063	28	White	MG-TAP 47091N	1SNB047091R1527	166		1400	0.40
			Yellow	MG-TAP 47041N	1SNB047041R1527	166		1400	0.50
15 x 43	0.591 x 1.693	14	White	MG-TAP 47198	1SNB047198R1543	353		700	0.10
15 x 49	0.591 x 1.929		White	MG-TAP 47092N	1SNB047092R1549	167		700	0.90
15 x 67	0.591 x 2.638	7	White	MG-TAP 47093N	1SNB047093R1567	168		350	1.80
18 mm *0.709 in* width									
18 x 27	0.709 x 1.063	20	White	MG-TAP 47097	1SNB047097R1827	178		1000	0.60
			Yellow	MG-TAP 47047	1SNB047047R1827	178		1000	0.60

Marking system accessories

MG2-PLT

Support plate

Included in the MG3 Kit				MG2-PLT 991002	1SNB991002R0000			1	148.50

Compatible holders

RTR-TAP 990454 and 990452

Pre-drilled rails (only for 15 mm 0.591 in MG-TAP)

RTA-TAP 990455N and 990453N

Self-adhesive rails (only for 15 mm 0.591 in MG-TAP)

1SNC160176S0201

RT... rail marker holders & protective covers
For MG-TAP labels

RTR-TAP

Description

- Provide an alternative to direct marking on components,
- Compatible with MG-TAP labels with a width of 15 mm (*0.591 in*),
- Non-deformable up to 90°C, resistant to acid, alcohol, solvents,
- Made of rigid dielectric high-impact PVC .

Main technical data

Material	Flammability	Temperature range
Rigid dielectric high-impact PVC	V0	+10°C to + 40°C +50°F to +104°F

Ordering details

Dimensions mm	Dimensions in	Nb. of markers per card	Color	Type	Part Number		Pkg pce	Weight (1 pce) g
RTR-TAP								
Pre-drilled rail								
15 x 430	0.591 x 16.929		Black ■	RTR-TAP 990454	1SNB990454R0000		25	37.60
			Grey □	RTR-TAP 990452	1SNB990452R0000		25	0.50
RTA-TAP								
Self-adhesive rail								
15 x 430	0.591 x 16.929		Black ■	RTA-TAP 990455N	1SNB990455R0000		25	19.50
			Grey □	RTA-TAP 990453N	1SNB990453R0000		25	0.50
RT-CCP								
Protective cover								
15 x 430	0.591 x 16.929		Transparent ⧄	RT-CCP 990456	1SNB990456R0000		25	12.60

1SNC160222S0201

MG-TAPW component and equipment markers
Precut blank labels

1SNC160137F0014

MG-TAPW

Description
- 9 mm *0.354 in* width versatile label used to identify a wide range of devices,
- Use with label rail holders RTA-TAPW 990653N,
- Made of rigid PVC.

Main technical data

Material	Flammability	Temperature range
Rigid PVC	V0	-30°C to +80°C -22°F to +176°F

Ordering details

Dimensions mm	Dimensions in	Nb. of markers per card	Color	Type	Part Number	SW code		Pkg marker	Weight (1 marker) g
9 x 12	0.354 x 0.472	88	Yellow	MG-TAPW 49042N	1SNB049042R0912	360		2200	0.10
9 x 15	0.354 x 0.591	77	White	MG-TAPW 49093N	1SNB049093R0915	361		1925	0.20
			Yellow	MG-TAPW 49043N	1SNB049043R0915	361		1925	0.20
9 x 20	0.354 x 0.787	55	White	MG-TAPW 49090N	1SNB049090R0920	362		2750	0.20
			Yellow	MG-TAPW 49040N	1SNB049040R0920	362		2750	0.60
9 x 29	0.354 x 1.142	30	White	MG-TAPW 49096	1SNB049096R0929	363		1500	0.30
			Yellow	MG-TAPW 49046	1SNB049046R0929	363		1500	0.30
9 x 35	0.354 x 1.378	33	White	MG-TAPW 49091N	1SNB049091R0935	364		1650	0.40

Marking system accessories

MG2-PLT

Support plate

Included in the MG3 Kit		MG2-PLT 991002	1SNB991002R0000			1	148.50

Compatible holders

PEAD

(only for MG-TAPW 49096 and 49046)

RTA-TAPW self-adhesive rail marker holders
For MG-TAPW labels

1SNC700116F0000

RTA-TAPW

Description
- Provide an alternative to direct marking on components,
- Compatible with 9 mm *0.354 in* MG-TAPW labels,
- Non-deformable up to 90°C, resistant to acid, alcohol, solvents.

Main technical data

Material	Flammability	Temperature range
Rigid dielectric high-impact PVC	V0	+10°C to + 40°C +50°F to +104°F

Ordering details

Dimensions mm	Dimensions in	Nb. of markers per card	Color	Type	Part Number		Pkg pce	Weight (1 pce) g
RTA-TAPW								
Self-adhesive rail								
9 x 430	0.354 x 16.929		Grey	RTA-TAPW 990653N	1SNB990653R0000		25	47.50

1SNC160177S0201

MG-TAP-CCS component and equipment markers
Precut transparent labels

1SNC160135F0014

MG-TAP-CCS

Description

- To be directly printed,
- Can also be used as a protective cover with 15 mm *0.591 in* MG-TAP or MG-TAPW labels and 15 mm *0.591 in* RTR-TAP and RTA-TAP legend rails,
- Made of rigid PVC.

Main technical data

Material	Flammability	Temperature range
Rigid PVC	V0	-30°C to +80°C -22°F to +176°F

Ordering details

Dimensions mm	Dimensions in	Nb. of markers per card	Color	Type	Part Number	SW code		Pkg marker	Weight (1 marker) g
15 x 49	0.591 x 1.929	12	Transparent	MG-TAP-CCS 990513	1SNB990513R1549	167		600	0.90
15 x 67	0.591 x 2.638	6	Transparent	MG-TAP-CCS 990514	1SNB990514R1567	168		300	1.30

Marking system accessories

MG2-PLT

Support plate

Included in the MG3 Kit		MG2-PLT 991002	1SNB991002R0000			1	148.50

Mounting instruction

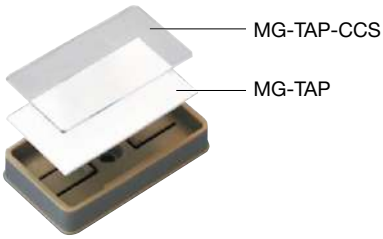

Compatible holders

RTR-TAP 990454 and 990452

Pre-drilled rails

RTA-TAP 990455N and 990453N

Self-adhesive rails

1SNC160178S0201

1SNC160138F0014

MG-TAR 45194

Description

- Designed to fit particular components with a suitable clip-in location,
- Made of rigid PVC.

Main technical data

Material	Flammability	Temperature range
Rigid PVC	V0	-30°C to +80°C -22°F to +176°F

Ordering details

Dimensions mm	Dimensions in	Nb. of markers per card	Color	Type	Part Number	SW code		Pkg marker	Weight (1 marker) g
17 x 35	0.669 x 1.378	18	White ☐	MG-TAR 45194	1SNB045194R1735	711		900	0.60
17 x 44	0.669 x 1.732	12	White ☐	MG-TAR 45195	1SNB045195R1744	717		600	0.90

Marking system accessories

MG2-PLT

Support plate

Included in the MG3 Kit				MG2-PLT 991002	1SNB991002R0000			1	148.50

Compatible holders

PEB
(only for MG-TAR 45194)

LH-R1
(only for MG-TAR 45194)

1SNC160175S0201

MG-PLC component and equipment markers
Precut blank labels

1SNC160141F0014

MG-PLC 71092

Description

- To be used for PLC's marking,
- Direct application on PLC to replace the neutral plates supplied as original equipment,
- Made of rigid PVC.

Main technical data

Material	Flammability	Temperature range
Rigid PVC	V0	-30°C to +80°C -22°F to +176°F

Ordering details

Dimensions mm	Dimensions in	Nb. of markers per card	Color	Type	Part Number	SW code		Pkg marker	Weight (1 marker) g
12.7 x 50	0.500 x 1.969	14	White	MG-PLC 71092	1SNB071092R0012	884/886		700	0.40
			Yellow	MG-PLC 71042	1SNB071042R0012	884/886		700	0.50
			Siemens Green	MG-PLC 71052	1SNB071052R0012	884/886		700	0.80
			Grey	MG-PLC 71002	1SNB071002R0012	884/886		700	0.40
17.5 x 103.5	0.689 x 4.075	6	White	MG-PLC 71090	1SNB071090R0017	880		300	2.20
			Yellow	MG-PLC 71040	1SNB071040R0017	880		300	2.00
			Siemens Green	MG-PLC 71050	1SNB071050R0017	880		300	2.20
			Grey	MG-PLC 71000	1SNB071000R0017	880		300	1.00
22.75 x 103.5	0.896 x 4.075	4	White	MG-PLC 71091	1SNB071091R0022	883		200	2.90
			Yellow	MG-PLC 71041	1SNB071041R0022	883		200	2.80
			Siemens Green	MG-PLC 71051	1SNB071051R0022	883		200	3.00
			Grey	MG-PLC 71001	1SNB071001R0022	883		200	1.00
25 x 50	0.984 x 1.969	8	White	MG-PLC 71094	1SNB071094R0025	887/888		400	1.00
			Yellow	MG-PLC 71044	1SNB071044R0025	887/888		400	0.90

Marking system accessories

MG2-PLT

Support plate

Included in the MG3 Kit		MG2-PLT 991002	1SNB991002R0000			1	148.50

Mounting instruction

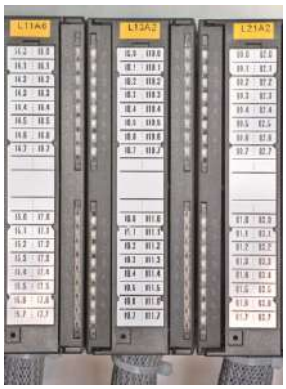

1SNC160182S0201

MG-VRT-A panel plates
Self-adhesive blank panel plates

MG-VRT-A 88903

Description
- To be used in identifying panels and cabinets with technical data or logos,
- Made of rigid PVC.

Main technical data

Material	Flammability	Temperature range
Rigid PVC	V0	-30°C to +80°C -22°F to +176°F

Ordering details

Dimensions mm	Dimensions in	Nb. of markers per card	Color	Type	Part Number	SW code		Pkg marker	Weight (1 marker) g
Self-adhesive panel plate for direct application on suitable surfaces									
52 x 107	2.047 x 4.213	2	White ☐	MG-VRT-A 88903	1SNB088903R0052	204		50	9.90

Marking system accessories

MG2-PLT

Support plate

Included in the MG3 Kit		MG2-PLT 991002	1SNB991002R0000			1	148.50

MG-VRT-R panel plates
Blank panel plates

MG-VRT-R 48903

Description
- To be used in identifying panels and cabinets with technical data or logos,
- To be fixed with rivets,
- Made of rigid PVC.

Main technical data

Material	Flammability	Temperature range
Rigid PVC	V0	-30°C to +80°C -22°F to +176°F

Ordering details

Dimensions mm	Dimensions in	Nb. of markers per card	Color	Type	Part Number	SW code		Pkg marker	Weight (1 marker) g
Rivet fixing panel plate									
52 x 107	2.047 x 4.213	2	White ☐	MG-VRT-R 48903	1SNB048903R0052	204		100	6.40

Marking system accessories

MG2-PLT

Support plate

Included in the MG3 Kit		MG2-PLT 991002	1SNB991002R0000			1	148.50

Mounting instruction

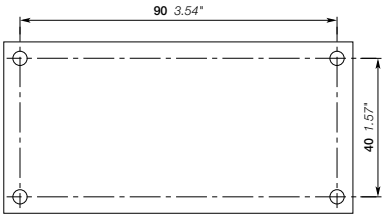

1SNC160185S0201 - Rev. A

Solution series
Blank markers and labels for AMS 600 and AMS 250 plotter

AMS 600 and AMS 250 plotter			76
AMS kit and accessories			78

Terminal block identification

Selection guide for terminal block markers			80
Terminal block markers	**MC...PA**	for SNK series	82
	RC...10	for SNA and Solution series	83
	RC55, RC65, RCAL85	for SNA and Solution series	84
	RCT...	for top marking	85
	RB-12W7		86
	RPEV	for PEV label holder	87
	RTM7	strip labels	88
	REH3	for Solution series	89
End stop markers	**MCLH, MCLH-R1**		90
	RCPEAD		92
	RPEH		93
	RCPEB, PIB, PIB3		94
End stop label holders and covers	**LH, LH-R1**	for SNK series	91
	PEAD, EPR2	for SNA and Solution series	92
	PEB, PEBM, EPR1	for SNA and Solution series	95

Wire and cable identification

Selection guide for wire and cable markers			96
Wire and cable markers	**WM**	PVC label (need label holder)	98
	PCGS	large label (need label holder)	100
Wire and cables label holders	**RING, SNAP, RINGT23**	transparent label holder	99
	RINGT209	for large label tied-on thick cables	100

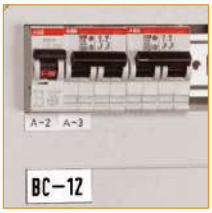

Component and equipment identification

Self-adhesive labels	**RPA, PIB2**		102
	PSP	for engraving job	103
	PAM	for strip identification	104
Pre-cut labels	**BA4**	for contactors, relays...	105
	PPB	two-colored label	106
Label holders and covers	**PAM10015,PCT**	15 mm rail and protective cover	107
	KA1-8120	push-button marker holder	107

Panel identification

Self-adhesive panel plates	**PAT**		108
Rivet fixing panel plates	**PPT**		108

4

Summary_4

AMS 600

Universal printing plotter

Compatible with all original manufacturer terminal block markers (polyamide), it can also print other identification supports such as: wire and cable markers, push buttons, panels…
This plotter offers a large working area, hosting up to 4 different support plates for one plot job.

Error detection mode

The A3 panel automatically recognises the support plate and avoids the need to select marking elements, it also warns the user when the support is wrongly installed.

Dry out protection system

Pens are prevented from drying out thanks to AMS 600 integrated pen station.

AMS 250

Compact

This A4 plotter is smaller than AMS 600 and is more suited to a cluttered environment.

1SNC160215S0201

Automatic installation

The installation program starts automatically. The computer just needs to be rebooted after it has finished and printing can start.

What you see is what you get !

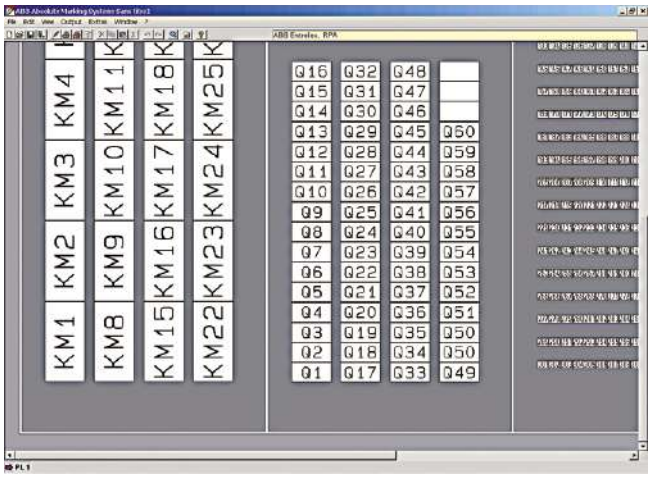

User friendly
Microsoft® Windows® software

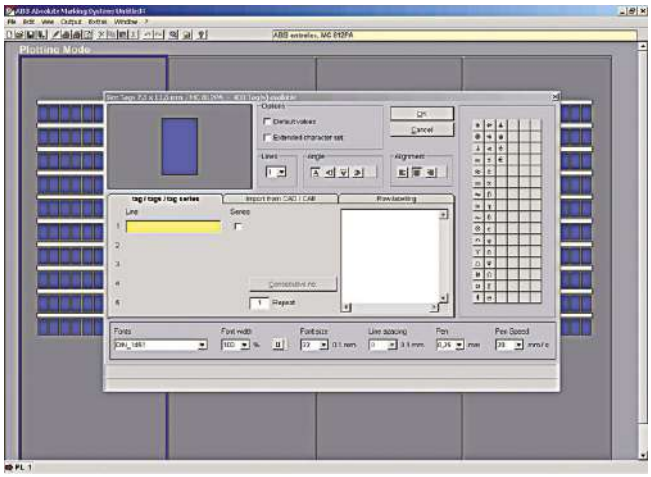

Time saving: data import function
from CAD, TXT and Excel® files

Microsoft, Windows, Excel are trademarks of Microsoft Corporation.

New special ink disposable plotter pens ED-R

- Disposable pens ED-R almost never clog, they are ideal for use in particularly dry environments.
- These pens are filled with the permanent ink ED, most suitable for marking various plastic surfaces.
- The ED ink should only be used on plastic material. Do not clean or touch with aggressive fluids.
- For applications outside of the control panel the ink P 2.0 is more suitable and durable.

AMS 600

AMS 600

Description

- For basic marking applications,
- Economic,
- Full-size format,
- Print original manufacturers' markers.

Ordering details

Description	Color	Type	Part Number		Pkg pce	Weight (1 pce) g
AMS 600 Plotter KIT		AMS 600 KIT	1SNA360000R2400		1	12600
List of items included in the KIT:						
1 AMS 600 plotter pen printer		AMS 600				
1 Software CD		AMS SOFTWARE				
1 Power supply cable		AMS POWER				
1 USB cable		AMS USB				
1 Support plate for RC / MC / RCTT / WMTT / BA4 / RCT		SPRC1				
1 Support plate for MC...PA		SPRC 30-3				
1 Plotter pen Ø 0.25 mm .01 in		AMS PEN 0.25				
1 Plotter pen Ø 0.35 mm .014 in		AMS PEN 0.35				
5 Ink cartridges		AMS INK CARTRIDGES				
1 Cleaner fluid		AMS CLEANER FLUID				
1 Cleaner kit		AMS CLEANER KIT				

AMS 250

AMS 250

Description

- Basic needs,
- Economic,
- Half-size format
- Compatible with most of AMS 600 accessories.

Ordering details

Description	Color	Type	Part Number		Pkg pce	Weight (1 pce) g
AMS 250 Plotter KIT		AMS 250 BASIC KIT	1SNA360000R2500		1	8800
List of items included in the KIT:						
1 AMS 250 plotter pen printer		AMS 250 BASIC				
1 Software CD		AMS SOFTWARE				
1 Power supply cable		AMS POWER				
1 USB cable		AMS USB				
1 Support plate for BA4 / MC / RC / RCAL / RCT / RCTT		SPRC2				
1 Disposable plotter pen Ø 0.25 mm .01 in EDR ink		DISPOSABLE AMS PEN ED-R 0.25				
1 Disposable plotter pen Ø 0.35 mm .014 in EDR ink		DISPOSABLE AMS PEN ED-R 0.35				

1SNC160110S0201

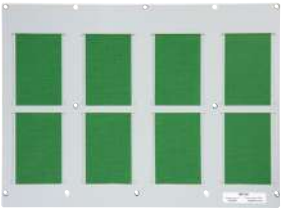

SPRC1

SPRC2

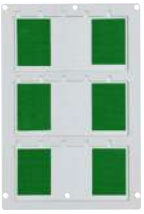

SPRC30-3

AMS PEN

AMS CLEANER KIT

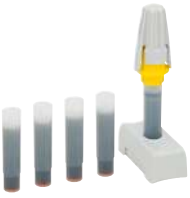

AMS INK CARTRIDGES

Support plates for TE Connectivity markers

Description	Compatibility AMS 500 AMS 600	Compatibility AMS 250	Type	Part Number		Pkg pce	Weight (1 pce) g
Support plates for:							
RC/MC/RCTT/WMTT/BA4/RCT full format	●		SPRC 1	1SNA360010R1500		1	1500.00
RC/MC/RCTT/WMTT/BA4/RCT		●	SPRC 2	1SNA360011R1500		1	600.00
RB strips	●	●	SPRC 4	1SNA360014R0500		1	300.00
RTM7-9	●		SPRC 5	1SNA360015R0600		1	1700.00
PIB	●	●	SPRC 13	1SNA360023R0600		1	260.00
BA5-50	●	●	SPRC 14	1SNA360024R0700		1	300.00
RC-X10A	●	●	SPRC 15	1SNA360025R0000		1	300.00
2 RC cards	●	●	SPRC 16	1SNA360026R0100		1	300.00
WM markers	●	●	SPRC 26	1SNA360036R0300		1	300.00
PAM strip	●		SPRC 27	1SNA360037R0400		1	300.00
RPCV markers	●	●	SPRC 28	1SNA360040R2300		1	300.00
RCL, P, W510	●	●	SPRC 29	1SNA360038R1500		1	300.00
MC... PA	●	●	SPRC 30-3	1SNA360039R1700		1	500.00
A4 universal support plate	●	●	SPRC 21	1SNA360031R0600		1	500.00

Support plates for other manufacturers

Description	Compatibility AMS 500 AMS 600	Compatibility AMS 250	Type	Part Number		Pkg pce	Weight (1 pce) g
Support plates for markers:							
Wieland	●	●	SPRC 6	1SNA360016R0700		1	350.00
Weidmüller	●	●	SPRC 7	1SNA360017R0000		1	400.00
Phoenix ZBM 5/6	●	●	SPRC 8	1SNA360018R1100		1	300.00
Phoenix ZB	●	●	SPRC 9	1SNA360019R1200		1	300.00
Allen Bradley WRZ	●	●	SPRC 10	1SNA360020R1700		1	330.00
Wago mini WSB5	●	●	SPRC 11	1SNA360021R0400		1	300.00

Accessories

Description		Diameter Color	Type	Part Number		Pkg pce	Weight (1 pce) g
Plotter pen P 2.0 black ink	Ø 0.18 mm 0.007 in	Red	AMS PEN 0.18	1SNA360103R1400		1	15.00
	Ø 0.25 mm 0.01 in	White	AMS PEN 0.25	1SNA360100R2500		1	15.00
	Ø 0.35 mm 0.014 in	Yellow	AMS PEN 0.35	1SNA360101R1200		1	15.00
	Ø 0.50 mm 0.02 in	Brown	AMS PEN 0.50	1SNA360104R1500		1	26.00
	Ø 0.70 mm 0.028 in	Blue	AMS PEN 0.70	1SNA360105R1600		1	26.00
	Ø 1.00 mm 0.039 in	Orange	AMS PEN 1.00	1SNA360106R1700		1	26.00
Disposable plotter pen P 2.0 black ink	Ø 0.25 mm 0.01 in	White	DISPOSABLE AMS PEN 0.25	1SNA360120R1000		1	24.00
	Ø 0.35 mm 0.014 in	Yellow	DISPOSABLE AMS PEN 0.35	1SNA360121R0500		1	24.00
Disposable plotter pen ED-R black ink	Ø 0.18 mm 0.007 in	Red	DISPOSABLE AMS PEN ED-R 0.18	1SNA360124R1000		1	24.00
	Ø 0.25 mm 0.01 in	White	DISPOSABLE AMS PEN ED-R 0.25	1SNA360122R1000		1	24.00
	Ø 0.35 mm 0.014 in	Yellow	DISPOSABLE AMS PEN ED-R 0.35	1SNA360123R0500		1	24.00
5 ink cartridges 1 ml			AMS INK CARTRIDGES	1SNA360150R2600		1	18.00
2 cleaner fluid bottles, 2x10 ml			AMS CLEANER FLUID	1SNA360155R1700		1	40.00
Cleaner kit including: 1 rinse bottle and 1 blotting paper			AMS CLEANER KIT	1SNA360156R1000		1	34.00
Dust cover			DUST COVER	1SNA360161R1500		1	200.00
Service kit for pen maintenance			SERVICE KIT FOR AMS 600	1SNA360162R1600		1	12.00
Self-adhesive support for support plate SPRC 1			SPDST1	1SNA360163R1700		1	70.00
Plotter head for AMS 600 including 1 printing module, 1 pen holder and 1 dust cover			PEN HOLDER	1SNA360098R1200		1	85.00

1SNC160111S0201 - Rev. A

AMS 600 / AMS 250 markers selection guide

Terminal block blank markers selection guide

Terminal blocks

Connection technology	Terminal block part number	Marker type	Marker mounting
Screw clamp	1SNK...	Individual marker	Top and side marking
	1SNA...	Individual marker	Side marking
			Top marking
		Strip label	Top marking
	1SNA... Miniblocks (MS...)	Individual marker	Side marking
	1SNA... Miniblocks (DR...)	Individual marker	Side marking
PI-Spring and pluggable PI-Spring	1SNK...	Individual marker	Top and side marking
Spring clamp	1SNA...	Individual marker	Top marking
			Side marking
	1SNA... Miniblocks	Individual marker	Top and side marking
ADO System®	1SNA...	Individual marker	Side marking
			Top marking
		Strip label	Top marking
	1SNA... Miniblocks	Individual marker	Top marking
Spring loaded screw clamp	1SNA...	Individual marker	Side marking
			Top marking
		Strip label	Top marking

Special terminal blocks spacing

Connection technology	Terminal block	Marker type	Marker mounting
Ring lug	1SNA...	Individual marker	Top and side marking
Stud	1SNA...	Individual marker	Top and side marking
Screw clamp pluggable terminal block	1SNA...	Individual marker	Side marking
		Strip label	Top marking (MA2.5/5-CPE)

SNK series end stop and label holders

BAZ1	Individual marker		Top marking	MC512PA
BAM4			Top and side marking	MC812PA
LH (label holder for BAM4, BAZH1, BAZ1)	Label		Top marking	MC-LH
LH-R1 (label holder for BAM4, BAZH1, BAZ1)				MC-LHR1

Spacing											
4 mm 0.157 in	5 mm 0.197 in	5.2 mm 0.205 in	6 mm 0.236 in	8 mm 0.315 in	10 mm 0.394 in	12 mm 0.472 in	16 mm 0.630 in	22 mm 0.866 in	26 mm 1.024 in	31 mm 1.220 in	36 mm 1.417 in
		MC512PA	MC612PA	MC812PA	MC812PA (1)						
	RC510		RC610	RC810	RC1010	RC1010 (1)					
	RC510		RCT610	RCT810							
	RTM9		RTM7								
			RC610	RC810							
RC410	RC55		RC65	RC810							
		MC512PA	MC612PA	MC812PA	MC812PA (1)						
RC410	RC510		RC610	RC810	RC1010	RC1010 (1)					
	RC55		RC65	RCAL85							
	RC55				RC55						
	RC510		RC610	RC810							
			RCT610	RCT810							
			RTM7								
	RC55		RC65	RCAL85							
			RC610	RC810	RC1010						
			RCT610	RCT810							
					RTM9						

(1) Marker width < marking's area size - markers must be mounted individually.

Spacing												
5.08 mm 0.200 in	7.62 mm 0.300 in	9.5 mm 0.374 in	12.5 mm 0.492 in	13 mm 0.512 in	16 mm 0.630 in	26 mm 1.024 in	27 mm 1.063 in	31 mm 1.220 in	32 mm 1.260 in	35 mm 1.378 in	42 mm 1.654 in	55 mm 2.165 in
		RCT810		RC1010 / REH3	REH3							
						PEP + RC610	RC810 (1)	PEP + RC610	RC810 (1)	PEP + RC610	RC810 (power) PEP+RC610 (stud)	RC810 (1)
RC510	RB-12W7											
RTM7												

(1) Marker width < marking's area size - markers must be mounted individually.

SNA series end stop and label holders

BAM2, BADH	Individual marker	Top and side marking		RC1010
BADL				RC810
BADRL, BAR	Individual marker	Top marking		RC610
BAMH				RC1010
PEAD (Label holder for BAM2 and BADL)	Label	Top marking		RCPEAD
PEB (Label holder for BAM2, BADL, BADH, BAMH, BAR and BADRL)				PIB
PEH (Label holder for BAM2, BADL, BADH, BAMH, BAR and BADRL)				RPEH

1SNC160216S0201

4

MC..PA terminal block markers
Blank markers for SNK series

1SNK160224F0014

MC512PA

Description

- Blank marker card in polyamide,
- Terminal blocks are directly independent after strip mounting,
- Improved marking visibility thanks to the increased marking surface +20% (12 mm *0.472 in*).

Main technical data

Material	Flammability
Polyamide	V2

Ordering details

Dimensions mm	Dimensions in	Maximum printed digits Hor.	Maximum printed digits Vert.	Nb. of markers per card	Color	Type	Part Number		Pkg card	Weight (1 card) g
For 5.2 mm *0.205 in* spacing										
MC512PA										
12 x 5	0.472 x 0.197	3	8	100	White ☐	MC512PA	1SNK149999R0000		20	10.00
For 6 mm *0.236 in* spacing										
MC612PA										
12 x 5.6	0.472 x 0.220	3	8	100	White ☐	MC612PA	1SNK159999R0000		20	11.00
For 8 mm *0.315 in* spacing										
MC812PA										
12 x 7.6	0.472 x 0.299	4	8	100	White ☐	MC812PA	1SNK169999R0000		20	14.00

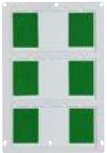

Marking system accessories

SPRC 30-3

Support plate for AMS600 and AMS250

Included in KIT MAO AMS 600 only		SPRC 30-3	1SNA360039R1700		1	500.00

Mounting instruction

1SNC160133S0201

RC..10 terminal block markers

Blank markers for SNA and solution series

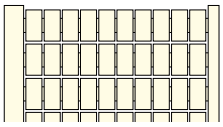

RC510

Description

- Blank card in polyamide,
- Terminal blocks are directly independent after strip mounting,
- To be used to mark spring clamp, ADO System® and screw clamp pluggable SNA terminal blocks.

Main technical data

Material	Flammability
Polyamide	V2

Ordering details

Dimensions mm	Dimensions in	Maximum printed digits Hor.	Maximum printed digits Vert.	Nb. of markers per card	Color	Type	Part Number		Pkg card	Weight (1 card) g
For 4 mm *0.157 in* terminal block spacing										
RC410										
10 x 4	0.394 x 0.157	2	7	100	White	RC410	1SNA229000R1500		10	5.20
For 5 mm *0.197 in* terminal block spacing										
RC510										
10 x 5	0.394 x 0.197	3	7	100	White	RC510	1SNA231000R0700		10	5.20
		4	4		Yellow	RC510-YL	1SNA103890R2100		10	5.50
For 6 mm *0.236 in* terminal block spacing										
RC610										
10 x 6	0.394 x 0.236	4	4	100	White	RC610	1SNA233000R0100		10	6.70
					Blue	RC610	1SNA206233R0000		10	6.70
					Orange	RC610	1SNA206232R0700		10	6.70
					Yellow	RC610	1SNA206231R0600		10	6.70
					Green	RC610	1SNA206230R1100		10	6.70
					Red	RC610	1SNA206235R0200		10	6.70
For 8 mm *0.315 in* terminal block spacing										
RC810										
10 x 8	0.394 x 0.315	4	4	100	White	RC810	1SNA234000R0200		10	8.20
For 10 mm *0.394 in* terminal block spacing										
RC1010										
10 x 10	0.394 x 0.394	7	7	80	White	RC1010	1SNA238000R1600		10	1.30

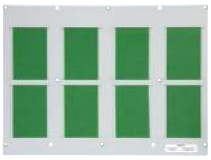

Marking system accessories

SPRC 1

Support plate for AMS600

Included in KIT MAO AMS 600		SPRC 1	1SNA360010R1500		1	1500.00

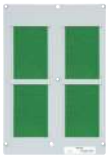

SPRC 2

Support plate for AMS250

Included in AMS 250 BASIC KIT		SPRC 2	1SNA360011R1500		1	600.00

Mounting instruction

4

1SNC160113S0201 - Rev. A

RC55, RC65, RCAL85 terminal block markers
Blank markers for SNA and Solution series

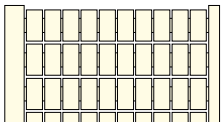

RC55

Description

- Blank card in polyamide,
- Terminal blocks are directly independent after strip mounting,
- To be used to mark screw clamp (1) and spring clamp (side mounting) SNA terminal blocks, and all Mini-blocks.

Main technical data

Material	Flammability
Polyamide	V2

Ordering details

Dimensions mm	Dimensions in	Maximum printed digits Hor.	Maximum printed digits Vert.	Nb. of markers per card	Color	Type	Part Number		Pkg card	Weight (1 card) g
For 5 mm *0.197 in* terminal block spacing										
RC55										
5 x 5	0.197 x 0.197	3	3	100	White	RC55	1SNA230000R1200		10	2.90
For 6 mm *0.236 in* terminal block spacing										
RC65										
5 x 6	0.197 x 0.236	3	3	100	White	RC65	1SNA232000R0000		10	3.60
					Blue	RC65	1SNA103775R0000		10	3.40
					Red	RC65	1SNA103776R0100		10	3.40
For 8 mm *0.315 in* terminal block spacing (1)										
RCAL85										
5 x 8	0.197 x 0.315	5	3	100	White	RCAL85	1SNA237000R0500		10	2.90

Marking system accessories

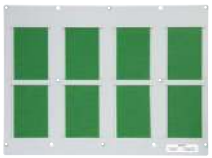

SPRC 1

Support plate for AMS600

Included in KIT MAO AMS 600		SPRC 1	1SNA360010R1500		1	1500.00

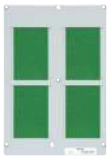

SPRC 2

Support plate for AMS250

Included in AMS 250 BASIC KIT		SPRC 2	1SNA360011R1500		1	600.00

(1) RCAL85 not compatible with screw clamp terminal blocks

Mounting instruction

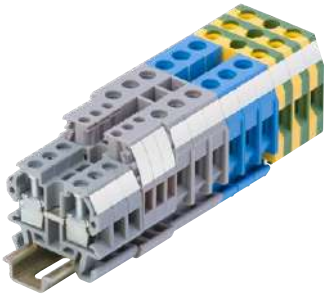

RCT.. terminal block markers
Blank markers for SNA and Solution series

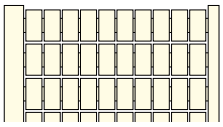

RCT610

Description
- Blank card in polyamide,
- Terminal blocks are directly independent after strip mounting,
- To be used for top marking of screw clamp and ADO System® terminal blocks from the SNA and Solution series.

Main technical data

Material	Flammability
Polyamide	V2

Ordering details

Dimensions mm	Dimensions in	Nb. of markers per card	Color	Type	Part Number		Pkg card	Weight (1 card) g
For 6 mm *0.236 in* terminal block spacing								
RCT610								
10 x 6	0.394 x 0.236	100	White ☐	RCT610	1SNA236000R0400		10	6.40
For 8 mm *0.315 in* terminal block spacing								
RCT810								
10 x 8	0.394 x 0.315	100	White ☐	RCT810	1SNA236500R0600		10	7.60

Marking system accessories

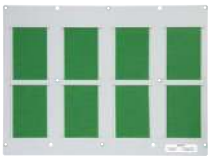

SPRC 1

Support plate for AMS600

Included in KIT MAO AMS 600				SPRC 1	1SNA360010R1500		1	1500.00

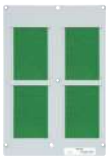

SPRC 2

Support plate for AMS250

Included in AMS 250 BASIC KIT				SPRC 2	1SNA360011R1500		1	600.00

Mounting instruction

Top marking

1SNC160115S0201 - Rev. A

RB-12W7 terminal block markers

Blank strip markers for SNA and Solution series

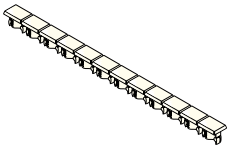

1SNC700164F0000

RB-12W7

Description

- Blank marking strip,
- Strip of 12 markers available in pre-printed on request,
- To be used for top marking of ADO System® pluggable terminal blocks.

Main technical data

Material	Flammability
Polyamide	V2

Ordering details

Dimensions mm	Dimensions in	Nb. of markers per card	Color	Type	Part Number		Pkg card	Weight (1 card) g
RB-12W7								
3.6 x 7.62	0.141 x 0.300	12	White	RB-12W7	1SNA290455R0700		50	6.00

Marking system accessories

SPRC 4

Support plate for AMS600 and AMS250

Purchased separately		SPRC 4	1SNA360014R0500		1	300.00

Mounting instruction

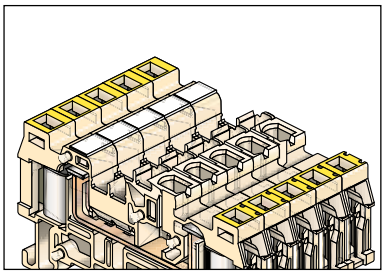

Strip marking

1SNC160118S0201

RPEV terminal block markers
Precut blank labels for SNA and Solution series

1SNC700163F0000

RPEV

Description
- Precut PVC label,
- To be used with PEV pivoting marker holder.

Main technical data

Material	Flammability
PVC	

Ordering details

Dimensions mm	Dimensions in	Nb. of markers per card	Color	Type	Part Number		Pkg card	Weight (1 card) g
RPEV								
6 x 29	0.236 x 1.142	99	White	RPEV	1SNA173178R0700		1	9.20

Marking system accessories

SPRC 21

Support plate for AMS600 and AMS250

Purchased separately		SPRC 21	1SNA360031R0600		1	500.00

4

PEV pivoting terminal block marker holders
For RPEV markers

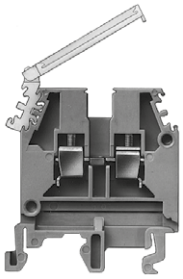

1SNC160192F0014

PEV

Description
- To be slided into 6 mm *0.236 in* spacing terminal blocks,
- Can be placed side by side from 10 mm *0.394 in* spacing,
- The pivoting upper part provides access to the compression screws,
- Designed to be mounted individually.

Main technical data

Material	Flammability

Ordering details

Dimensions mm	Dimensions in	Nb. of markers per card	Color	Type	Part Number		Pkg pce	Weight (1 pce) g
PEV								
Pivoting marker holder								
6 x 29	0.236 x 1.142		Grey	PEV	1SNA113180R1200		10	1.00

Dimensions given apply to the labelling area.

Mounting instruction

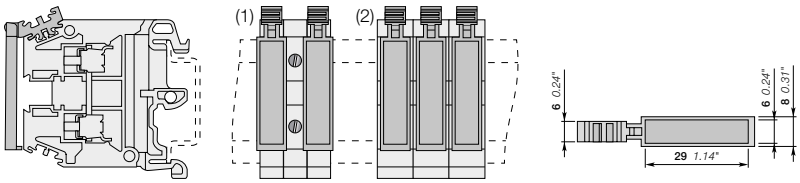

1 - For 6 mm (*0.236 in*) and 8 mm (*0.315 in*) spacing terminal blocks : PEV can be used on every other block
2 - From 10 mm (*0.394 in*) spacing terminal blocks : PEV can be used side by side

1SNC160119S0201

RTM terminal block markers

Blank strip labels for SNA and Solution series

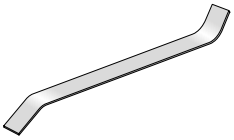

1SNC700180F0000

RTM7

Description

- Blank marking strip,
- To be top mounted by sliding it in terminal blocks.

Main technical data

Material	Flammability
PVC	

Ordering details

Dimensions mm	Dimensions in	Nb. of markers per card	Color	Type	Part Number		Pkg card	Weight (1 card) g
RTM7								
For screw clamp and ADO System® terminal blocks from the SNA and Solution series, 6 mm *0.236 in* to 12 mm *0.472 in* spacing								
7.6 x 500	0.299 x 19.685	1	White ☐	RTM7	1SNA168410R0700		1	5.00
RTM9								
For terminal blocks type MA 2.5/5 and M 35/16								
10 x 500	0.394 x 19.685	1	White ☐	RTM9	1SNA164602R0000		1	5.00

Marking system accessories

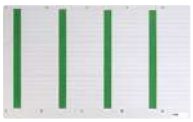

SPRC 5

Support plate for AMS600

Purchased separately				SPRC 5	1SNA360015R0600		1	1700.00

Mounting instruction

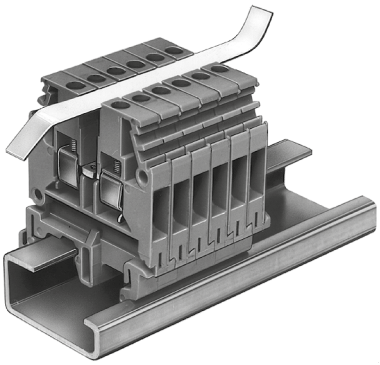

1SNC160117S0201

REH3 terminal block markers
Precut blank labels for Solution series

1SNC700160F0000

REH3

Description

- Precut blank labels in cellulose acetate,
- Terminal blocks are directly independent after mounting,
- To be used to mark 13 mm *0.512 in* or 16 mm *0.630 in* spacing ring lug terminal blocks from the Solution series.

Main technical data

Material	Flammability
Cellulose Acetate	V2

Ordering details

Dimensions mm	Dimensions in	Nb. of markers per card	Color	Type	Part Number		Pkg card	Weight (1 card) g
REH3								
7 x 5	0.276 x 0.197	680	White	REH3	1SNA163155R2600		1	20.00

Marking system accessories

SPRC 21

Support plate for AMS600 and AMS250

Purchased separately		SPRC 21	1SNA360031R0600		1	500.00

4

1SNC160116S0201

MCLH end stop markers

Self-adhesive precut blank labels for SNK series

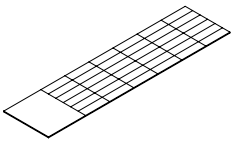

1SNC700301F0000

MCLH, MCLH-R1

Description

– Identify your terminal blocks assembly with the self-adhesive label adapted to the LH label holders.

Main technical data

Material	Flammability	Temperature range
PVC + Adhesive acrylic	V0	-55°C to +110°C -67°F to +230°F

Ordering details

Dimensions mm	Dimensions in	Nb. of markers per card	Color	Type	Part Number		Pkg card	Weight (1 card) g
For LH label holder								
MCLH								
30 x 8.8	1.181 x 0.346	36	White	MCLH	1SNK900630R0000		25	10.00
			Yellow	MCLH-YL	1SNK900633R0000		25	10.00
For LH-R1 label holder								
MCLH-R1								
35.35 x 17.65	1.392 x 0.695	15	White	MCLH-R1	1SNK900631R0000		25	10.00
			Yellow	MCLH-R1-YL	1SNK900634R0000		25	10.00

Marking system accessories

SPRC 21

Support plate for AMS600 and AMS250

Purchased separately		SPRC 21	1SNA360031R0600		1	500.00

Mounting instruction

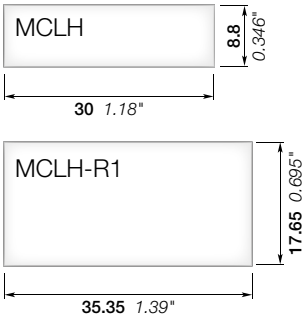

Compatible holders

LH

LH-R1

1SNC160128S0201

LH, LH-R1 end stop label holders
For MCLH labels

1SNK160210F0014

Description

- Easily identify your terminal blocks assembly with white or yellow labels,
- Adjustable in height for best visibility,
- Compatible with all SNK end stops.

Main technical data

Material	Flammability	Temperature range
Polyamide	V0	-55°C to +110°C -67°F to +230°F

Ordering details

Spacing mm	Spacing in	Dimensions mm	Dimensions in	Color	Type	Part Number		Pkg pce	Weight (1 pce) g
For MCLH									
LH									
10	0.394	8.8 x 30	0.35 x 1.18	Dark Grey	LH	1SNK900605R0000		50	0.60
For MCLH-R1									
LH-R1									
19.5	0.768	17.9 x 35.65	0.70 x 1.40	Dark Grey	LH-R1	1SNK900607R0000		50	1.10

LH

LH-R1

Dimensions given apply to the labelling area.

4

Compatible end stops

BAM4
1SNK900001R0000

BAZ1
1SNK900002R0000

BAZH1
1SNK900102R0000

1SNC160129S0201

RCPEAD end stop labels
Precut blank labels

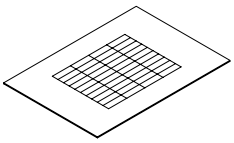

1SNC700232F0000

RCPEAD

Description

– Identify your terminal block assemblies with the self-adhesive label adapted to the PEAD label holders.

Main technical data

Material	Flammability
PVC	

Ordering details

Dimensions mm	Dimensions in	Nb. of markers per card	Color	Type	Part Number		Pkg card	Weight (1 card) g
RCPEAD								
9 x 29	0.354 x 1.142	40	White	RCPEAD	1SNA399725R0600		1	5.00

Marking system accessories

SPRC 21

Support plate for AMS600 and AMS250

Purchased separately		SPRC 21	1SNA360031R0600		1	500.00

Mounting instruction

PEAD + RCPEAD

PEAD end stop label holders
For RCPEAD label

1SNC160058F0014

PEAD

Description

– Easily identify your terminal block assemblies with white or yellow labels,
– Adjustable in height for best visibility,
– Compatible with BAM2 and BADL SNA series end stops.

Main technical data

Material	Flammability
Polyamide	V0

Ordering details

Dimensions mm	Dimensions in	Color	Type	Part Number		Pkg pce	Weight (1 pce) g
PEAD							
Label holder for end stop, compatible with RCPEAD marker and EPR2 cover.							
9 x 29	0.354 x 1.142	Grey	PEAD	1SNA399719R1000		20	0.78
EPR2							
Card of 20 covers for RCPEAD and RCPEAD-TT markers							
9 x 29	0.354 x 1.142	Transparent	EPR2	1SNA399726R0700		1	4.00

Dimensions given apply to the labelling area.

Compatible end stops

BAM2
1SNA206351R1600

BADL
1SNC160122S0201 - Rev. A
1SNA399903R0200

RPEH end stop labels
Precut blank labels

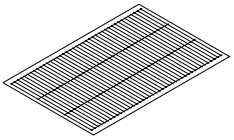

1SNC700308F0000

RPEH

Description
– Blank markers to be slided into PEH holders.

Main technical data

Material	Flammability
PVC	

Ordering details

Dimensions mm	Dimensions in	Nb. of markers per card	Color	Type	Part Number		Pkg card	Weight (1 card) g
RPEH								
Precut markers to be slided into PEH 40 x 5 mm 1.575 x *.197 in* holders								
5 x 40	0.197 x 1.575	120	White ☐	RPEH	1SNA163007R2600		1	20.00

Marking system accessories

SPRC 21

Support plate for AMS600 and AMS250

Purchased separately				SPRC 21	1SNA360031R0600		1	500.00

4

PEH end stop label holders
For RPEH

1SNC160260F0014

PEH

Description
– Compatible with marker PEH.

Main technical data

Material	Flammability

Ordering details

Dimensions mm	Dimensions in	Nb. of markers per card	Color	Type	Part Number		Pkg pce	Weight (1 pce) g
PEH								
Horizontal label holder for end stop, to be attached accross end stop.								
5 x 40	0.197 x 1.575		Transparent ◪	PEH	1SNA163211R2600		10	382.00

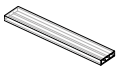

Compatible end stops

BAM2
1SNA206351R1600

BADL
1SNA399903R0200

BADH
1SNA116900R2700

BAMH
1SNA114836R0000

BAR
1SNA164519R2400

BADRL
1SNA199420R2100

1SNC160123S0201 - Rev. B

RCPEB, PIB, PIB3 end stop markers
Precut blank labels

1SNC160200F0014

RCPEB

Description

- Blank markers to be inserted onto PEB label holder,
- To be used for terminal block assembly identification.

Main technical data

Material	Flammability
PVC	

Ordering details

Dimensions mm	Dimensions in	Nb. of markers per card	Color	Type	Part Number		Pkg pce	Weight (1 pce) g
RCPEB								
Card of 54 precut labels to be inserted onto PEB label holder								
17.5 x 35	0.689 x 1.378	54	White □	RCPEB	1SNA178430R0500		1	0.05
PIB3								
Strip of 7 labels to be inserted onto PEB label holder								
17.5 x 35	0.689 x 1.378	7	White □	PIB3	1SNA235462R2200		50	0.40
PIB								
Individual labels to be inserted onto PEB label holder, white marking on black background								
17.5 x 35	0.689 x 1.378	1	Black ■	PIB	1SNA173812R1300		100	0.60

Marking system accessories

SPRC 13

Support plate for AMS600 and AMS250

Purchased separately				SPRC 13	1SNA360023R0600		1	260.00

Compatible holders

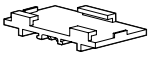

PEB

1SNC160124S0201

PEB end stop label holders
For RCPEB, PIB, PIB3 labels

PEB

Description

- To be used for terminal block assembly identification,
- Direct insertion onto end stops from SNA series,
- Compatible with RCPEB, PIB, PIB3 labels.

Main technical data

Material	Flammability	Temperature range
Polyamide (PEB) PVC (EPR1)	V0	-55°C to +110°C -67°F to +230°F

Ordering details

Dimensions mm	Dimensions in	Color	Type	Part Number		Pkg pce	Weight (1 pce) g
PEB							
Label holder for end stop 35 x 17 mm 1.378 x *.669 in*, to be snapped onto end stop							
18 x 35.5	0.709 x 1.378	Grey	PEB	1SNA113077R1100		50	1.70
EPR1							
Card of 54 PVC protective covers							
17.5 x 35	0.689 x 1.378	Transparent	EPR1	1SNA178431R2200		1	0.054
PEBM							
"All in one": PEB marker holder with marker and protection included							
			PEBM	1SNA113084R0100		50	2.80

Compatible end stops

BAM2
1SNA206351R1600

BADL
1SNA399903R0200

BADH
1SNA116900R2700

BAMH
1SNA114836R0000

BAR
1SNA164519R2400

BADRL
1SNA199420R2100

1SNC160125S0201 - Rev. A

Evolutive and protected wire and cable identification

Each individual label and label holder is easily detached from the stem for installation onto cable. The printed label in its holder is perfectly protected over time.

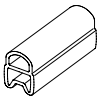

RING
Slide-on cable label holders to be used before connecting the wires.

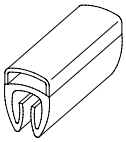

SNAP
Clip-on cable label holders to be snap-on the wire already connected or not.

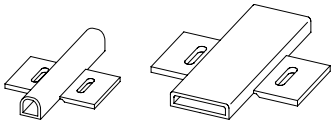

RINGT
Tie-on cable label holders recommended for thick tube, hose and conduit.

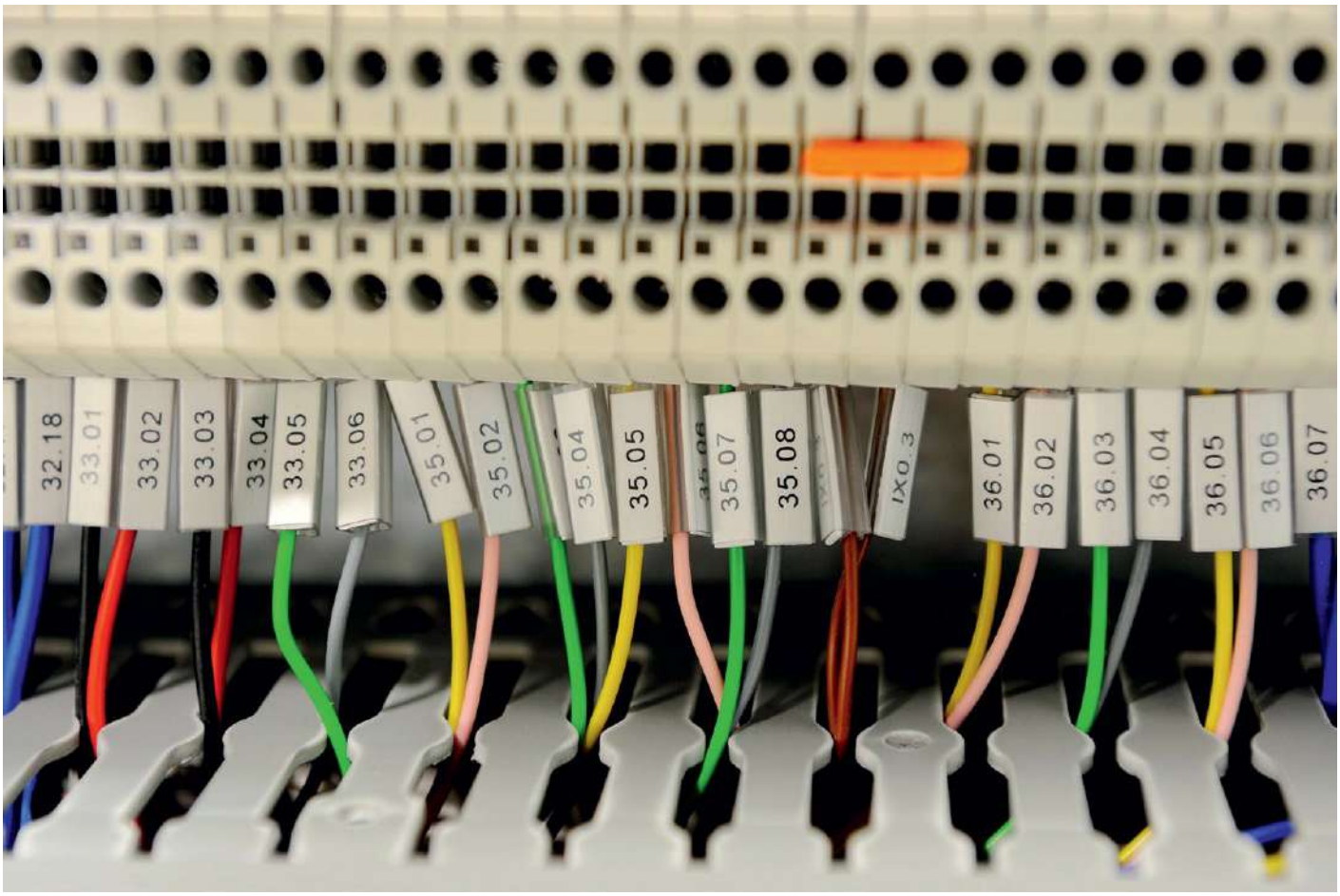

1SNC160217S0201

For evolutive identification

Marker holders + slide-in markers

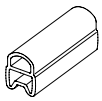

RING

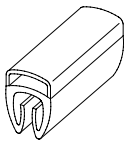

SNAP

Wire external diameter mm	Wire external diameter in	Marker holder length mm	Marker holder length in	Marker holder	Compatible marker
Slide-on cable marker holder					
Ø 1.5 ... 2.5	Ø 0.059 ... 0.098	12	0.472	RING122	WM 12
		18	0.709	RING182	WM 18
Ø 2 ... 4	Ø 0.079 ... 0.157	12	0.472	RING124	WM 12
		18	0.709	RING184	WM 18
Ø 4 ... 7	Ø 0.157 ... 0.276	12	0.472	RING127	WM 12
		18	0.709	RING187	WM 18
Ø 6 ... 10	Ø 0.236 ... 0.394	12	0.472	RING1210	WM 12
		18	0.709	RING1810	WM 18
Clip-on cable marker holder					
Ø 2 ... 3.5	Ø 0.079 ... 0.138	15	0.591	SNAP152	WM 12
		23	0.906	SNAP232	WM 18
Ø 2.8 ... 5	Ø 0.11 ... 0.197	15	0.591	SNAP154	WM 12
		23	0.906	SNAP234	WM 18
Ø 5 ... 8	Ø 0.197 ... 0.315	15	0.591	SNAP157	WM 12
		23	0.906	SNAP237	WM 18
Ø 8 ... 10	Ø 0.315 ... 0.394	15	0.591	SNAP1510	WM 12
		23	0.906	SNAP2310	WM 18

4

For identification of thick tubes

Tie-on markers / marker holders

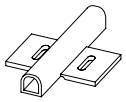

RINGT23

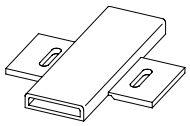

RINGT209

Marker holder length mm	Marker holder length in	Marker holder	Compatible marker
23	23	RINGT23	WM 18
28	28	RINGT209	PCGS209

1SNC160217S0201

WM wire and cable markers
Slide-in precut blank labels

1SNC7000182F0000

WM12

Description

- Blank marker card for wire and cable identification,
- Markers are protected in the marker holders,
- To be slided into RING or SNAP transparent holders,
- Made of ABS.

Main technical data

Material	Flammability	Temperature range
Acrylonitrile Butadienne Styrene (ABS)	V0	-50°C to +80°C -58°F to +176°F

Ordering details

Dimensions mm	Dimensions in	Maximum printed digits Hor.	Maximum printed digits Vert.	Nb. of markers per card	Color	Type	Part Number		Pkg card	Weight (1 card) g
WM12										
For 12 mm *0.472 in* RING or SNAP holders										
12 x 4	0.472 x 0.157	2	8	60	White ☐	WM12	1SNA235148R0700		50	12.00
WM18										
For 18 mm *0.709 in* RING or SNAP holders										
18 x 4	0.709 x 0.157	2	10	60	White ☐	WM18	1SNA235149R0000		50	15.00

Marking system accessories

SPRC 26

Support plate for AMS600 and AMS250

Purchased separately						SPRC 26	1SNA360036R0300		1	300.00

Compatible holders

RING
Sealed transparent holder

SNAP
Unsealed transparent holder

RINGT23
Tie-on sealed transparent holder

1SNC160120S0201

RING, SNAP transparent marker holders
For WM markers

1SNC160251F0014

Description

- Transparent marker holder profiled to allow marking on various cable sizes, up to ø 10 mm *0.394 in*,
- Use with WM and WMTT markers,
- Made of PVC.

Main technical data

Material	Flammability	Temperature range
PVC	V0	-50°C to +80°C -58°F to +176°F

Ordering details

Wire ext. diameter mm	Wire ext. diameter in	Wire section mm²	Holder length mm	Holder length in	Color	Type	Part Number		Pkg pce	Weight (1 pce) g

For cable mounting

RING

RING

12 mm *0.472 in* sealed transparent holder for WM12 and WMTT12 markers

1.5 ... 2.5	0.059 ... 0.098		12	0.472	Transparent ⧄	RING122	1SNA235117R1000		3000	1.80
2 ... 4	0.079 ... 0.157				Transparent ⧄	RING124	1SNA235118R2100		3000	2.20
4 ... 7	0.157 ... 0.276				Transparent ⧄	RING127	1SNA235119R2200		2000	0.30
6 ... 10	0.236 ... 0.394				Transparent ⧄	RING1210	1SNA235120R2700		2000	0.50

18 mm *0.709 in* sealed transparent holder for WM18 and WMTT18 markers

1.5 ... 2.5	0.059 ... 0.098		18	0.709	Transparent ⧄	RING182	1SNA235123R1600		3000	0.30
2 ... 4	0.079 ... 0.157				Transparent ⧄	RING184	1SNA235124R1700		3000	0.30
4 ... 7	0.157 ... 0.276				Transparent ⧄	RING187	1SNA235125R1000		2000	0.50
6 ... 10	0.236 ... 0.394				Transparent ⧄	RING1810	1SNA235126R1100		1000	0.70

SNAP

SNAP

12 mm *0.472 in* un-sealed transparent holder for WM12 and WMTT12 markers

2 ... 3.5	0.079 ... 0.138		15	0.591	Transparent ⧄	SNAP152	1SNA235129R2400		1000	0.40
2.8 ... 5	0.110 ... 0.197				Transparent ⧄	SNAP154	1SNA235130R2100		1000	0.40
5 ... 8	0.197 ... 0.315				Transparent ⧄	SNAP157	1SNA235131R1600		500	0.50
8 ... 10	0.315 ... 0.394				Transparent ⧄	SNAP1510	1SNA235132R1700		500	1.40

23 mm *0.906 in* in un-sealed transparent holder for WM18 and WMTT18 markers

2 ... 3.5	0.079 ... 0.138		23	0.906	Transparent ⧄	SNAP232	1SNA235133R1000		500	0.40
2.8 ... 5	0.110 ... 0.197				Transparent ⧄	SNAP234	1SNA235134R1100		500	0.60
5 ... 8	0.197 ... 0.315				Transparent ⧄	SNAP237	1SNA235135R1200		200	0.90
8 ... 10	0.315 ... 0.394				Transparent ⧄	SNAP2310	1SNA235136R1300		200	2.20

For thick tube mounting

RINGT23

RINGT23

23 mm *0.906 in* tie-on sealed transparent holder for WM and WMTT markers

			23	0.906	Transparent ⧄	RINGT23	1SNA235137R1400		200	0.40

Use holders only with designated cable marker of the same or a shorter length.

4

1SNC160137S0201

PCGS wire and cable markers
Slide-in precut blank labels

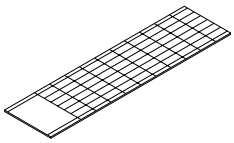

1SNC700181F0000

PCGS209

Description
- Blank marker card for thick wires,
- To be inserted in RINGT209 holder,
- Made of PVC.

Main technical data

Material	Flammability	Temperature range
PVC	V0	-40°C to +60°C -40°F to +140°F

Ordering details

Dimensions mm	Dimensions in	Nb. of markers per card	Color	Type	Part Number		Pkg card	Weight (1 card) g
PCGS								
For RINGT holders								
20 x 9.3	0.787 x 0.366	60	White	PCGS209	1SNA235150R0500		40	10.00

Marking system accessories

SPRC 21

Support plate for AMS600 and AMS250

Purchased separately		SPRC 21	1SNA360031R0600		1	500.00

Use holders only with designated cable marker of the same or a shorter length.

RINGT209 transparent marker holders
For PCGS markers

1SNC160100F0014

RINGT209

Description
- Transparent tie-on marker holders profiled to allow thick tube identification,
- Use with PCGS209 markers,
- Made of PVC.

Main technical data

Material	Flammability	Temperature range
PVC	V0	-50°C to +80°C -58°F to +176°F

Ordering details

Dimensions mm	Dimensions in	Color	Type	Part Number		Pkg pce	Weight (1 pce) g
For thick tube mounting							
RINGT209							
Tie-on sealed transparent holder for PCGS markers							
9.5 x 20	0.374 x 0.787	Transparent	RINGT209	1SNA235142R2100		240	6.00

Use holders only with designated cable marker of the same or a shorter length.
Dimensions given apply to the labelling area.

1SNC160121S0201

RCCV wire and cable markers
Slide-in blank label

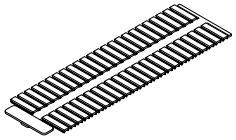

1SNC700227F0000

RCCV

Description
- Blank marker card for wire and cable identification,
- Markers are protected in the marker holders,
- To be slided in PETC transparent holder,
- Made of halogen-free PVC.

Main technical data

Material	Flammability	Temperature range
PVC	V0	-20°C to +60°C -4°F to +140°F

Ordering details

Dimensions mm	Dimensions in	Maximum printed digits Hor.	Maximum printed digits Vert.	Nb. of markers per card	Color	Type	Part Number		Pkg pce	Weight (1 pce) g
Card of 48 blank markers compatible with PETC holders										
4.2 x 16.5	0.165 x 0.650			48	White ☐	RCCV	1SNA235460R0400		1	10.00

Marking system accessories

SPRCC 2

Support plate for AMS600

Purchased separately		SPRCC 2	1SNA360011R0200		1	330.00

Mounting instruction

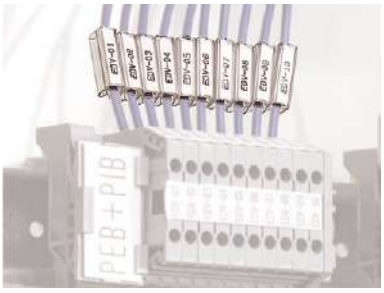

4

PETC transparent marker holders
For RCCV makers

1SNC160251F0014

Description
- Transparent marker holder for wire and cable identification,
- To be used with RCCV markers,
- Made of PVC.

Main technical data

Material	Flammability	Temperature range
PVC		-20°C to +90°C -4°F to +194°F

Ordering details

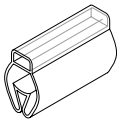

Wire ext. diameter mm	Wire ext. diameter in	Wire section mm²	Holder length mm	Holder length in	Color	Type	Part Number		Pkg pce	Weight (1 pce) g
1.1 ... 3.3	0.043 ... 0.130	0.1 ... 1	18	0.709	Transparent ◪	PETC 51	1SNA168737R0200		100	
1.5 ... 4.5	0.059 ... 0.177	1 ... 2.5			Transparent ◪	PETC 53	1SNA168741R1600		100	
3 ... 8	0.118 ... 0.315	2.5 ... 10			Transparent ◪	PETC 56	1SNA168747R1400		100	

1SNC160134S0201

RPA, PIB2 component and equipment markers
Self-adhesive precut blank labels

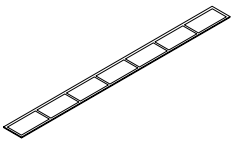

1SNC700241F0000

PIB2

Description

- Self-adhesive precut blank labels for general purpose,
- High performance adhesive compatible with most surface types.

Main technical data

Material	Flammability
PVC	

Ordering details

Dimensions mm	Dimensions in	Nb. of markers per card	Color	Type	Part Number		Pkg card	Weight (1 card) g
RPA								
8 x 17.5	0.315 x 0.689	16	White ☐	RPA	1SNA235463R2300		50	0.20
PIB2								
35 x 17.5	1.378 x 0.689	7	White ☐	PIB2	1SNA235461R2100		50	0.60

Marking system accessories

SPRC 13

Support plate for AMS600 and AMS250

Purchased separately				SPRC 13	1SNA360023R0600		1	260.00

Mounting instruction

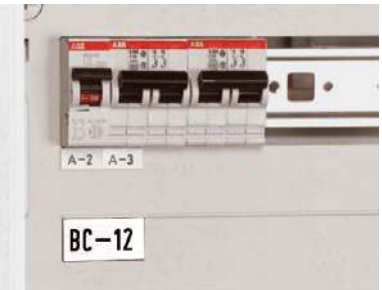

1SNC160126S0201

PSP component and equipment markers
Self-adhesive precut blank labels

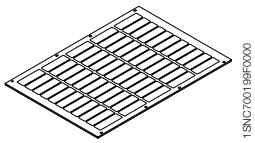

PSP

Description

- Self-adhesive blank precut markers with round shaped edges,
- Can be used as plate for sub-assembly identification,
- Double-layered, can be engraved (black layer underneath).

Main technical data

Material	Flammability	Temperature range
MMA	UB	-40°C to +82°C -40°F to +180°F

Ordering details

Dimensions mm	Dimensions in	Nb. of markers per card	Color	Type	Part Number		Pkg card	Weight (1 card) g
15 x 50	0.591 x 1.969	55	White ☐	PSP5015	1SNA235109R0100		2	10.00

Marking system accessories

SPRC 21

Support plate for AMS600 and AMS250

Purchased separately		SPRC 21	1SNA360031R0600		1	500.00

4

Compatible holders

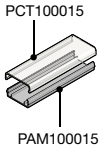

Protective cover and self-adhesive marking profile

1SNC160221S0201

PAM component and equipment markers
Self-adhesive precut blank labels

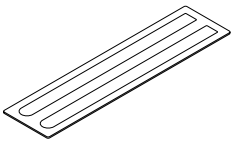

PAM

Description

- Self-adhesive blank labels used to identified different components and equipments in a cabinet,
- Can be used directly on equipment.

Main technical data

Material	Flammability	Temperature range
PVC	V0	-40°C to +60°C -40°F to +140°F

Ordering details

Dimensions mm	Dimensions in	Nb. of markers per card	Color	Type	Part Number		Pkg card	Weight (1 card) g
PAM								
Self-adhesive blank label compatible with PAM100015 and PCT100015 transparent cover								
15 x 215	0.591 x 8.465	2	White ☐	PAM21515	1SNA235103R2300		20	12.00
15 x 430	0.591 x 16.930		White ☐	PAM43015	1SNA235104R2400		20	22.00
Self-adhesive blank label								
20 x 215	0.787 x 8.465	2	White ☐	PAM21520	1SNA235105R2500		20	14.00
20 x 430	0.787 x 16.930		White ☐	PAM43020	1SNA235106R2600		20	27.00

Marking system accessories

SPRC 27

Support plate for AMS600

Purchased separately				SPRC 27	1SNA360037R0400		1	300.00

Compatible holders

PCT100015

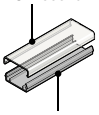

PAM100015

Protective cover and self-adhesive marking profile
(only for PAM21515 and PAM43015)

1SNC160130S0201

1SNC160101F0014

Description

- Precut blank label used to identify contactors, overload relays and manual motor starters,
- Compatible with: AF09 ... AF370 contactors, TF thermal overload relays, EF electronic overload relays, and MS116, MS132 manual motor starters.

Main technical data

Material	Flammability
Polycarbonate	V0

Ordering details

Dimensions mm	Dimensions in	Color	Type	Part Number		Pkg card	Weight (1 card) g
BA4							
Card of 16 blank labels							
7 x 20	0.276 x 0.787	White	BA4	1SNA235156R2700		16	11.00

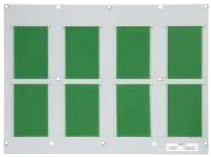

Marking system accessories

SPRC 1

Support plate for AMS600

Included in KIT MAO AMS 600		SPRC 1	1SNA360010R1500		1	1500.00

Mounting instruction

PPB component and equipment markers
Two-colored precut blank labels

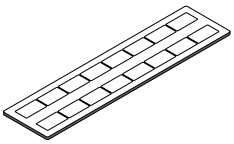

1SNC700200F0000

PPB

Description

- Two-colored blank label cards, white side / black side,
- For push button or sub-assembly identification,
- To be used with a label holder.

Main technical data

Material	Flammability	Temperature range
MMA	HB	-40°C to +82°C -40°F to +180°F

Ordering details

Dimensions mm	Dimensions in	Nb. of markers per card	Color	Type	Part Number		Pkg card	Weight (1 card) g
15 x 27	0.591 x 1.063	16	White and Black	PPB2715	1SNA235111R1200		12	13.30

Marking system accessories

SPRC 21

Support plate for AMS600 and AMS250

Purchased separately		SPRC 21	1SNA360031R0600		1	500.00

Compatible holders

PCT100015

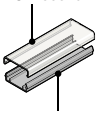

PAM100015

Protective cover and self-adhesive marking profile

KA1-8120

Push button marker holder

1SNC160132S0201

PAM100015, PCT, KA marker holders
For component and equipment markers

1SNC160268F0014

Description

– Self-adhesive marking profile (PAM), transparent cover (PCT) and push-button marker holder (KA1),
– To be used with PAM21515, PAM43015, PSP and PPB labels.

Main technical data

Material	Flammability	Temperature range
PVC (for PAM and PCT) Polycarbonate (for KA1)	V0 (for PAM and PCT) V2 (for KA1)	-10°C to +70°C +14°F to +158°F (for PAM and PCT) -25°C to +70°C -13°F to +158°F (for KA1)

Ordering details

Dimensions		Color	Type	Part Number		Pkg	Weight
mm	in					pce	(1 pce) g

KA1-8120

Push-button marker holder

KA1

Push button marker holder for PPB markers.

15 x 27	0.591 x 1.063	Black ■	KA1-8120	1SFA616920R8120		10	2.00

Self-adhesive marking profile for PAM, PSP and PPB markers.

PCT

Transparent cover for PAM100015

15 x 1000	0.591 x 39.370	Transparent ⧄	PCT100015	1SNA235147R2600		35	34.00

PCT100015

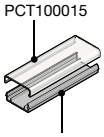

PAM100015

PAM100015

Self-adhesive marking profile for PAM, PSP and PPB markers.

15 x 1000	0.591 x 39.370	Black ■	PAM100015	1SNA235146R2500		35	40.00

Dimensions given apply to the labelling area.

4

1SNC160131S0201

PAT panel plates
Self-adhesive blank panel plates

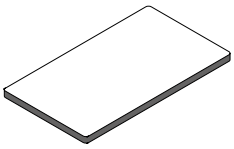

1SNC700214F0000

PAT

Description

– Self-adhesive blank plate for identification of electrical boxes or cabinets.

Main technical data

Material	Flammability	Temperature range
PVC	V0	-40°C to +120°C -40°F to +248°F

Ordering details

Dimensions mm	Dimensions in	Nb. of markers per card	Color	Type	Part Number		Pkg pce	Weight (1 pce) g
PAT								
Adhesive plate for external marking								
60 x 100	2.262 x 3.937	1	White ☐	PAT10060	1SNA235114R1500		15	5.30

Marking system accessories

SPRC 21

Support plate for AMS600 and AMS250

Purchased separately		SPRC 21	1SNA360031R0600		1	500.00

PPT panel plates
Blank panel plates

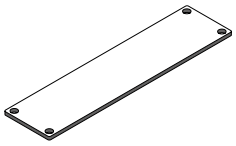

1SNC700213F0000

PPT

Description

– Blank perforated plate for identification of electrical boxes or cabinets,
– To be fixed with rivets.

Main technical data

Material	Flammability	Temperature range
MMA	HB	-40°C to +82°C -40°F to +180°F

Ordering details

Dimensions mm	Dimensions in	Nb. of markers per card	Color	Type	Part Number		Pkg pce	Weight (1 pce) g
PPT								
Perforated blank plate								
30 x 120	1.181 x 4.724	1	White ☐	PPT12030	1SNA235115R1600		50	3.50
50 x 180	1.969 x 7.087		White ☐	PPT18050	1SNA235116R1700		30	8.80

Marking system accessories

SPRC 21

Support plate for AMS600 and AMS250

Purchased separately		SPRC 21	1SNA360031R0600		1	500.00

Mounting instruction

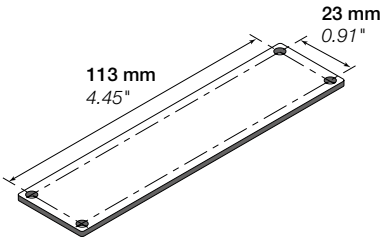

1SNC160136S0201

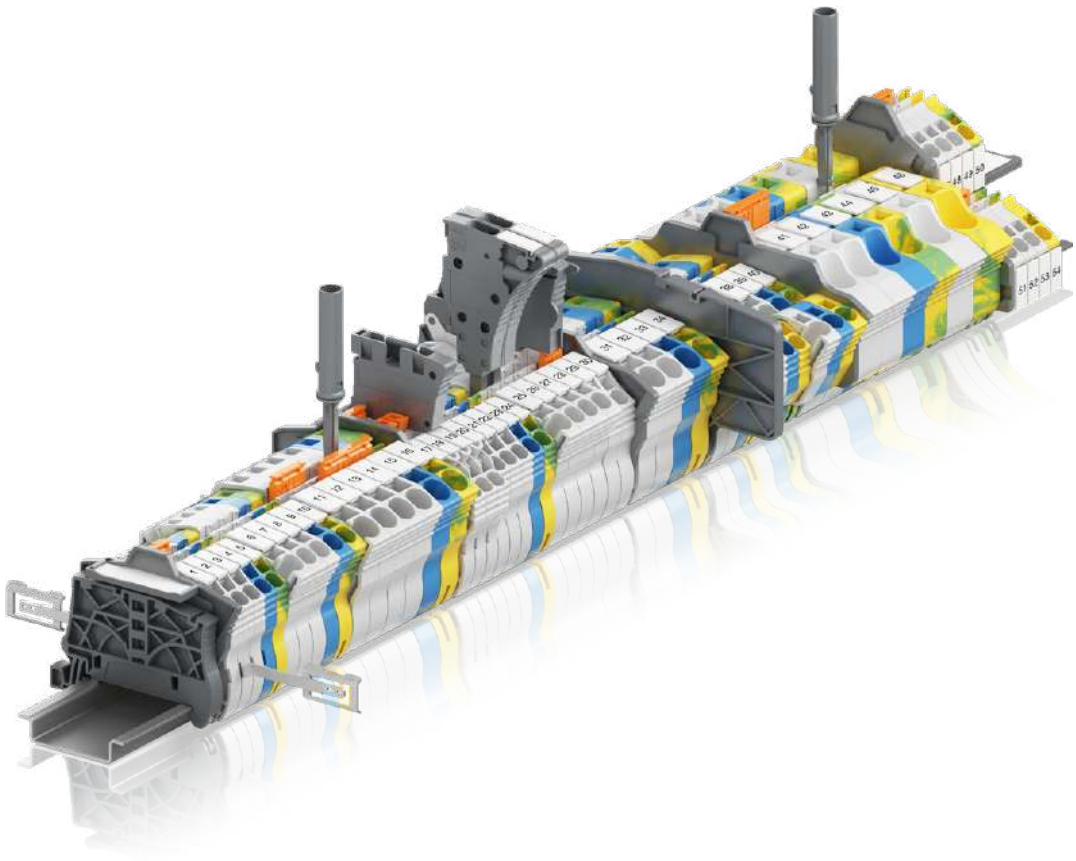

Solution series
Pre-printed markers

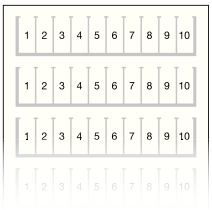

SNK series terminal block identification

5.2 mm *0.205 in* spacing	**MC512PA**	horizontal mounting	112
		vertical mounting	114
6 mm *0.236 in* spacing	**MC612PA**	horizontal mounting	116
		vertical mounting	118
8 mm *0.315 in* spacing	**MC812PA**	horizontal mounting	120
		vertical mounting	122

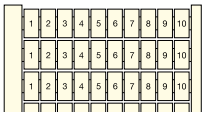

SNA series terminal block identification

4 mm *0.157 in* spacing	**RC410**	horizontal mounting	124
		vertical mounting	126
5 mm *0.197 in* spacing	**RC510**	horizontal mounting	128
		vertical mounting	130
6 mm *0.236 in* spacing	**RC610**	horizontal mounting	132
		vertical mounting	135
8 mm *0.315 in* spacing	**RC810**	horizontal mounting	137
		vertical mounting	139
10 mm *0.394 in* spacing	**RC1010**	horizontal mounting	140
		vertical mounting	141

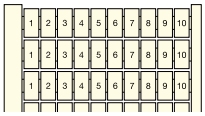

Specific terminal block identification

5 mm *0.197 in* spacing	**RC55**	horizontal mounting	142
		vertical mounting	144
6 mm *0.236 in* spacing	**RC65**	horizontal mounting	145
		vertical mounting	147
8 mm *0.315 in* spacing	**RCAL85**	horizontal mounting	149
		vertical mounting	150
6 mm *0.236 in* spacing	**RCT**		151
6 mm *0.236 in* to 12 mm *0.472 in* spacing	**RTM**	top marking	152
13 mm *0.512 in* or 16 mm *0.630 in* spacing	**REH3**		153
5 mm *0.197 in* to 12 mm *0.472 in* spacing	**EPU**	top marking	154
6 mm *0.236 in* to 22 mm *0.866 in* spacing	**EP**	top marking	155

Customized marking

Order form 156

MC512PA terminal block markers

Pre-printed markers for SNK series - 5.2 mm 0.205 in spacing - horizontal mounting

1SNC160191F0014

Horizontal terminal block assembly

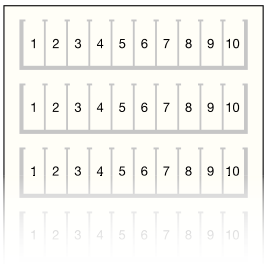

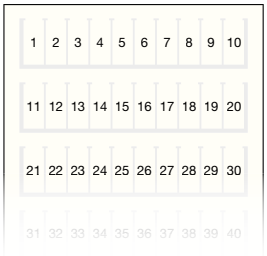

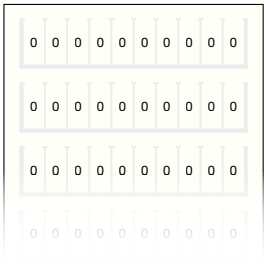

Description

– Save printing time with our large pre-printed card offer with pre-printed numbers, letters or symbols.

Main technical data

Material	Flammability
Polyamide	V2

Ordering details

Description	Color	Type	Part Number	Pkg card	Weight (1 card) g
Card with 100 markers, ascending order repeated 10 times					
0->9 (x10)	White	MC512PA	1SNK140091R0000	5	10.00
1->10 (x10)	White	MC512PA	1SNK140011R0000	5	10.00
11->20 (x10)	White	MC512PA	1SNK140021R0000	5	10.00
21->30 (x10)	White	MC512PA	1SNK140031R0000	5	10.00
31->40 (x10)	White	MC512PA	1SNK140041R0000	5	10.00
41->50 (x10)	White	MC512PA	1SNK140051R0000	5	10.00
51->60 (x10)	White	MC512PA	1SNK140061R0000	5	10.00
61->70 (x10)	White	MC512PA	1SNK140071R0000	5	10.00
71->80 (x10)	White	MC512PA	1SNK140081R0000	5	10.00
81->90 (x10)	White	MC512PA	1SNK140083R0000	5	10.00
91->100 (x10)	White	MC512PA	1SNK140101R0000	5	10.00
101->110 (x10)	White	MC512PA	1SNK140111R0000	5	10.00
111->120 (x10)	White	MC512PA	1SNK140121R0000	5	10.00
121->130 (x10)	White	MC512PA	1SNK140131R0000	5	10.00
131->140 (x10)	White	MC512PA	1SNK140141R0000	5	10.00
141->150 (x10)	White	MC512PA	1SNK140151R0000	5	10.00
151->160 (x10)	White	MC512PA	1SNK140161R0000	5	10.00
161->170 (x10)	White	MC512PA	1SNK140171R0000	5	10.00
171->180 (x10)	White	MC512PA	1SNK140181R0000	5	10.00
181->190 (x10)	White	MC512PA	1SNK140191R0000	5	10.00
191->200 (x10)	White	MC512PA	1SNK140201R0000	5	10.00
Card with 100 markers, ascending order					
1->100	White	MC512PA	1SNK145011R0000	5	10.00
101->200	White	MC512PA	1SNK145021R0000	5	10.00
201->300	White	MC512PA	1SNK145031R0000	5	10.00
301->400	White	MC512PA	1SNK145041R0000	5	10.00
401->500	White	MC512PA	1SNK145051R0000	5	10.00
501->600	White	MC512PA	1SNK145061R0000	5	10.00
601->700	White	MC512PA	1SNK145071R0000	5	10.00
701->800	White	MC512PA	1SNK145081R0000	5	10.00
801->900	White	MC512PA	1SNK145091R0000	5	10.00
Card with 100 markers, repeated identical numbers					
0 (x100)	White	MC512PA	1SNK147001R0000	5	10.00
1 (x100)	White	MC512PA	1SNK147011R0000	5	10.00
2 (x100)	White	MC512PA	1SNK147021R0000	5	10.00
3 (x100)	White	MC512PA	1SNK147031R0000	5	10.00
4 (x100)	White	MC512PA	1SNK147041R0000	5	10.00
5 (x100)	White	MC512PA	1SNK147051R0000	5	10.00
6 (x100)	White	MC512PA	1SNK147061R0000	5	10.00
7 (x100)	White	MC512PA	1SNK147071R0000	5	10.00
8 (x100)	White	MC512PA	1SNK147081R0000	5	10.00
9 (x100)	White	MC512PA	1SNK147091R0000	5	10.00

Continue on next page →

1SNC160159S0201

MC512PA terminal block markers

Pre-printed markers for SNK series - 5.2 mm 0.205 in spacing - horizontal mounting

Ordering details

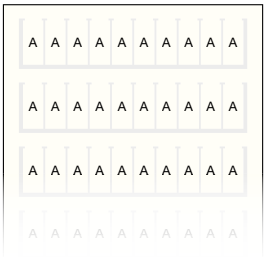

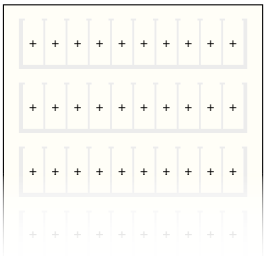

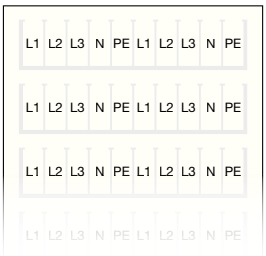

Description	Color	Type	Part Number		Pkg card	Weight (1 card) g
← Continuation of previous page						
Card with 100 markers, repeated identical letters						
A (x100)	White	MC512PA	1SNK146011R0000		5	10.00
B (x100)	White	MC512PA	1SNK146021R0000		5	10.00
C (x100)	White	MC512PA	1SNK146031R0000		5	10.00
D (x100)	White	MC512PA	1SNK146041R0000		5	10.00
E (x100)	White	MC512PA	1SNK146051R0000		5	10.00
F (x100)	White	MC512PA	1SNK146061R0000		5	10.00
G (x100)	White	MC512PA	1SNK146071R0000		5	10.00
H (x100)	White	MC512PA	1SNK146081R0000		5	10.00
I (x100)	White	MC512PA	1SNK146091R0000		5	10.00
J (x100)	White	MC512PA	1SNK146101R0000		5	10.00
K (x100)	White	MC512PA	1SNK146111R0000		5	10.00
L (x100)	White	MC512PA	1SNK146121R0000		5	10.00
M (x100)	White	MC512PA	1SNK146131R0000		5	10.00
N (x100)	White	MC512PA	1SNK146141R0000		5	10.00
O (x100)	White	MC512PA	1SNK146151R0000		5	10.00
P (x100)	White	MC512PA	1SNK146161R0000		5	10.00
Q (x100)	White	MC512PA	1SNK146171R0000		5	10.00
R (x100)	White	MC512PA	1SNK146181R0000		5	10.00
S (x100)	White	MC512PA	1SNK146191R0000		5	10.00
T (x100)	White	MC512PA	1SNK146201R0000		5	10.00
U (x100)	White	MC512PA	1SNK146211R0000		5	10.00
V (x100)	White	MC512PA	1SNK146221R0000		5	10.00
W (x100)	White	MC512PA	1SNK146231R0000		5	10.00
X (x100)	White	MC512PA	1SNK146241R0000		5	10.00
Y (x100)	White	MC512PA	1SNK146251R0000		5	10.00
Z (x100)	White	MC512PA	1SNK146261R0000		5	10.00
Card with 100 markers, repeated identical symbols						
+ (x100)	White	MC512PA	1SNK148001R0000		5	10.00
- (x100)	White	MC512PA	1SNK148011R0000		5	10.00
~ (x100)	White	MC512PA	1SNK148021R0000		5	10.00
= (x100)	White	MC512PA	1SNK148031R0000		5	10.00
⏚ (x100)	White	MC512PA	1SNK148041R0000		5	10.00
L1 (x100)	White	MC512PA	1SNK148051R0000		5	10.00
L2 (x100)	White	MC512PA	1SNK148061R0000		5	10.00
L3 (x100)	White	MC512PA	1SNK148071R0000		5	10.00
PE (x100)	White	MC512PA	1SNK148091R0000		5	10.00
U1 (x100)	White	MC512PA	1SNK148101R0000		5	10.00
U2 (x100)	White	MC512PA	1SNK148111R0000		5	10.00
U3 (x100)	White	MC512PA	1SNK148121R0000		5	10.00
V1 (x100)	White	MC512PA	1SNK148131R0000		5	10.00
V2 (x100)	White	MC512PA	1SNK148141R0000		5	10.00
V3 (x100)	White	MC512PA	1SNK148151R0000		5	10.00
W1 (x100)	White	MC512PA	1SNK148161R0000		5	10.00
W2 (x100)	White	MC512PA	1SNK148171R0000		5	10.00
W3 (x100)	White	MC512PA	1SNK148181R0000		5	10.00
Card with 100 markers, 5 different symbols repeated 20 times						
L1-L2-L3-N-PE (x20)	White	MC512PA	1SNK149001R0000		5	10.00
Card with 100 markers, 9 different symbols repeated 10 times						
U1-U2-U3-V1-V2-V3-W1-W2-W3 (x10) + U1 (x10)	White	MC512PA	1SNK149011R0000		5	10.00

1SNC160159S0201

5.2 mm 0.205 in spacing - vertical mounting

Vertical terminal block assembly

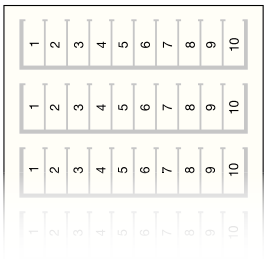

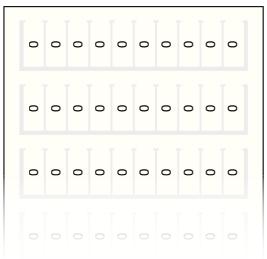

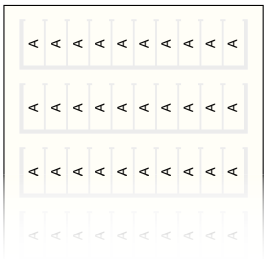

Description

– Save printing time with our large pre-printed card offer with pre-printed numbers, letters or symbols.

Main technical data

Material	Flammability
Polyamide	V2

Ordering details

Description	Color	Type	Part Number	Pkg card	Weight (1 card) g
Card with 100 markers, ascending order repeated 10 times					
0->9 (x10)	White	MC512PA	1SNK140092R0000	5	10.00
1->10 (x10)	White	MC512PA	1SNK140012R0000	5	10.00
11->20 (x10)	White	MC512PA	1SNK140022R0000	5	10.00
21->30 (x10)	White	MC512PA	1SNK140032R0000	5	10.00
31->40 (x10)	White	MC512PA	1SNK140042R0000	5	10.00
41->50 (x10)	White	MC512PA	1SNK140052R0000	5	10.00
51->60 (x10)	White	MC512PA	1SNK140062R0000	5	10.00
61->70 (x10)	White	MC512PA	1SNK140072R0000	5	10.00
71->80 (x10)	White	MC512PA	1SNK140082R0000	5	10.00
81->90 (x10)	White	MC512PA	1SNK140084R0000	5	10.00
91->100 (x10)	White	MC512PA	1SNK140102R0000	5	10.00
101->110 (x10)	White	MC512PA	1SNK140112R0000	5	10.00
111->120 (x10)	White	MC512PA	1SNK140122R0000	5	10.00
121->130 (x10)	White	MC512PA	1SNK140132R0000	5	10.00
131->140 (x10)	White	MC512PA	1SNK140142R0000	5	10.00
141->150 (x10)	White	MC512PA	1SNK140152R0000	5	10.00
151->160 (x10)	White	MC512PA	1SNK140162R0000	5	10.00
161->170 (x10)	White	MC512PA	1SNK140172R0000	5	10.00
171->180 (x10)	White	MC512PA	1SNK140182R0000	5	10.00
181->190 (x10)	White	MC512PA	1SNK140192R0000	5	10.00
191->200 (x10)	White	MC512PA	1SNK140202R0000	5	10.00
Card with 100 markers, ascending order					
1->100	White	MC512PA	1SNK145012R0000	5	10.00
101->200	White	MC512PA	1SNK145022R0000	5	10.00
201->300	White	MC512PA	1SNK145032R0000	5	10.00
301->400	White	MC512PA	1SNK145042R0000	5	10.00
401->500	White	MC512PA	1SNK145052R0000	5	10.00
501->600	White	MC512PA	1SNK145062R0000	5	10.00
601->700	White	MC512PA	1SNK145072R0000	5	10.00
701->800	White	MC512PA	1SNK145082R0000	5	10.00
801->900	White	MC512PA	1SNK145092R0000	5	10.00
901->1000	White	MC512PA	1SNK145102R0000	5	10.00
Card with 100 markers, repeated identical numbers					
0 (x100)	White	MC512PA	1SNK147002R0000	5	10.00
1 (x100)	White	MC512PA	1SNK147012R0000	5	10.00
2 (x100)	White	MC512PA	1SNK147022R0000	5	10.00
3 (x100)	White	MC512PA	1SNK147032R0000	5	10.00
4 (x100)	White	MC512PA	1SNK147042R0000	5	10.00
5 (x100)	White	MC512PA	1SNK147052R0000	5	10.00
6 (x100)	White	MC512PA	1SNK147062R0000	5	10.00
7 (x100)	White	MC512PA	1SNK147072R0000	5	10.00
8 (x100)	White	MC512PA	1SNK147082R0000	5	10.00
9 (x100)	White	MC512PA	1SNK147092R0000	5	10.00
Card with 100 markers, repeated identical letters					
A (x100)	White	MC512PA	1SNK146012R0000	5	10.00
B (x100)	White	MC512PA	1SNK146022R0000	5	10.00
C (x100)	White	MC512PA	1SNK146032R0000	5	10.00
D (x100)	White	MC512PA	1SNK146042R0000	5	10.00
E (x100)	White	MC512PA	1SNK146052R0000	5	10.00
F (x100)	White	MC512PA	1SNK146062R0000	5	10.00
G (x100)	White	MC512PA	1SNK146072R0000	5	10.00
H (x100)	White	MC512PA	1SNK146082R0000	5	10.00
I (x100)	White	MC512PA	1SNK146092R0000	5	10.00
J (x100)	White	MC512PA	1SNK146102R0000	5	10.00

Continue on next page →

1SNC160160S0201

5.2 mm 0.205 in spacing - vertical mounting

Ordering details

Description	Color	Type	Part Number		Pkg card	Weight (1 card) g
← Continuation of previous page						
K (x100)	White	MC512PA	1SNK146112R0000		5	10.00
L (x100)	White	MC512PA	1SNK146122R0000		5	10.00
M (x100)	White	MC512PA	1SNK146132R0000		5	10.00
N (x100)	White	MC512PA	1SNK146142R0000		5	10.00
O (x100)	White	MC512PA	1SNK146152R0000		5	10.00
P (x100)	White	MC512PA	1SNK146162R0000		5	10.00
Q (x100)	White	MC512PA	1SNK146172R0000		5	10.00
R (x100)	White	MC512PA	1SNK146182R0000		5	10.00
S (x100)	White	MC512PA	1SNK146192R0000		5	10.00
T (x100)	White	MC512PA	1SNK146202R0000		5	10.00
U (x100)	White	MC512PA	1SNK146212R0000		5	10.00
V (x100)	White	MC512PA	1SNK146222R0000		5	10.00
W (x100)	White	MC512PA	1SNK146232R0000		5	10.00
X (x100)	White	MC512PA	1SNK146242R0000		5	10.00
Y (x100)	White	MC512PA	1SNK146252R0000		5	10.00
Z (x100)	White	MC512PA	1SNK146262R0000		5	10.00

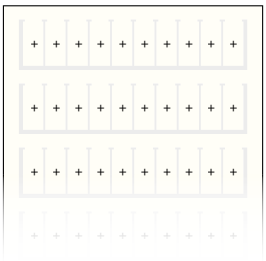

Card with 100 markers, repeated identical symbols

+ (x100)	White	MC512PA	1SNK148002R0000		5	10.00
- (x100)	White	MC512PA	1SNK148012R0000		5	10.00
~ (x100)	White	MC512PA	1SNK148022R0000		5	10.00
= (x100)	White	MC512PA	1SNK148032R0000		5	10.00
⏚ (x100)	White	MC512PA	1SNK148042R0000		5	10.00
L1 (x100)	White	MC512PA	1SNK148052R0000		5	10.00
L2 (x100)	White	MC512PA	1SNK148062R0000		5	10.00
L3 (x100)	White	MC512PA	1SNK148072R0000		5	10.00
PE (x100)	White	MC512PA	1SNK148092R0000		5	10.00
U1 (x100)	White	MC512PA	1SNK148102R0000		5	10.00
U2 (x100)	White	MC512PA	1SNK148112R0000		5	10.00
U3 (x100)	White	MC512PA	1SNK148122R0000		5	10.00
V1 (x100)	White	MC512PA	1SNK148132R0000		5	10.00
V2 (x100)	White	MC512PA	1SNK148142R0000		5	10.00
V3 (x100)	White	MC512PA	1SNK148152R0000		5	10.00
W1 (x100)	White	MC512PA	1SNK148162R0000		5	10.00
W2 (x100)	White	MC512PA	1SNK148172R0000		5	10.00
W3 (x100)	White	MC512PA	1SNK148182R0000		5	10.00
+24V (x100)	White	MC512PA	1SNK148192R0000		5	10.00
+48V (x100)	White	MC512PA	1SNK148202R0000		5	10.00
-24V (x100)	White	MC512PA	1SNK148212R0000		5	10.00
-48V (x100)	White	MC512PA	1SNK148222R0000		5	10.00

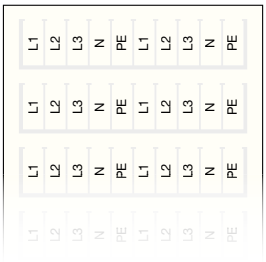

Card with 100 markers, 5 different symbols repeated 20 times

L1-L2-L3-N-PE (x20)	White	MC512PA	1SNK149002R0000		5	10.00

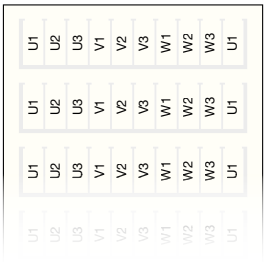

Card with 100 markers, 9 different symbols repeated 10 times

U1-U2-U3-V1-V2-V3-W1-W2-W3 (x10) + U1 (x10)	White	MC512PA	1SNK149012R0000		5	10.00

1SNC160160S0201

6 mm 0.236 in spacing - horizontal mounting

1SNC160191R0014

Horizontal terminal block assembly

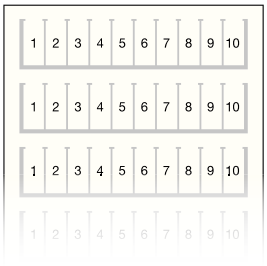

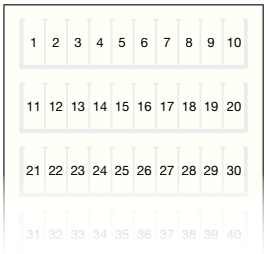

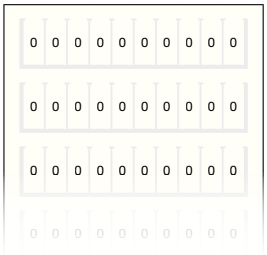

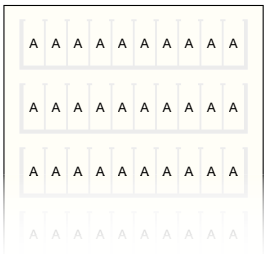

Description

– Save printing time with our large pre-printed card offer with pre-printed numbers, letters or symbols.

Main technical data

Material	Flammability
Polyamide	V2

Ordering details

Description	Color	Type	Part Number		Pkg card	Weight (1 card) g
Card with 100 markers, ascending order repeated 10 times						
0->9 (x10)	White	MC612PA	1SNK150091R0000		5	11.00
1->10 (x10)	White	MC612PA	1SNK150011R0000		5	11.00
11->20 (x10)	White	MC612PA	1SNK150021R0000		5	11.00
21->30 (x10)	White	MC612PA	1SNK150031R0000		5	11.00
31->40 (x10)	White	MC612PA	1SNK150041R0000		5	11.00
41->50 (x10)	White	MC612PA	1SNK150051R0000		5	11.00
51->60 (x10)	White	MC612PA	1SNK150061R0000		5	11.00
61->70 (x10)	White	MC612PA	1SNK150071R0000		5	11.00
71->80 (x10)	White	MC612PA	1SNK150081R0000		5	11.00
81->90 (x10)	White	MC612PA	1SNK150083R0000		5	11.00
91->100 (x10)	White	MC612PA	1SNK150101R0000		5	11.00
101->110 (x10)	White	MC612PA	1SNK150111R0000		5	11.00
111->120 (x10)	White	MC612PA	1SNK150121R0000		5	11.00
121->130 (x10)	White	MC612PA	1SNK150131R0000		5	11.00
131->140 (x10)	White	MC612PA	1SNK150141R0000		5	11.00
141->150 (x10)	White	MC612PA	1SNK150151R0000		5	11.00
151->160 (x10)	White	MC612PA	1SNK150161R0000		5	11.00
161->170 (x10)	White	MC612PA	1SNK150171R0000		5	11.00
171->180 (x10)	White	MC612PA	1SNK150181R0000		5	11.00
181->190 (x10)	White	MC612PA	1SNK150191R0000		5	11.00
191->200 (x10)	White	MC612PA	1SNK150201R0000		5	11.00
Card with 100 markers, ascending order						
1->100	White	MC612PA	1SNK155011R0000		5	11.00
101->200	White	MC612PA	1SNK155021R0000		5	11.00
201->300	White	MC612PA	1SNK155031R0000		5	11.00
301->400	White	MC612PA	1SNK155041R0000		5	11.00
401->500	White	MC612PA	1SNK155051R0000		5	11.00
501->600	White	MC612PA	1SNK155061R0000		5	11.00
601->700	White	MC612PA	1SNK155071R0000		5	11.00
701->800	White	MC612PA	1SNK155081R0000		5	11.00
801->900	White	MC612PA	1SNK155091R0000		5	11.00
Card with 100 markers, repeated identical numbers						
0 (x100)	White	MC612PA	1SNK157001R0000		5	11.00
1 (x100)	White	MC612PA	1SNK157011R0000		5	11.00
2 (x100)	White	MC612PA	1SNK157021R0000		5	11.00
3 (x100)	White	MC612PA	1SNK157031R0000		5	11.00
4 (x100)	White	MC612PA	1SNK157041R0000		5	11.00
5 (x100)	White	MC612PA	1SNK157051R0000		5	11.00
6 (x100)	White	MC612PA	1SNK157061R0000		5	11.00
7 (x100)	White	MC612PA	1SNK157071R0000		5	11.00
8 (x100)	White	MC612PA	1SNK157081R0000		5	11.00
9 (x100)	White	MC612PA	1SNK157091R0000		5	11.00
Card with 100 markers, repeated identical letters						
A (x100)	White	MC612PA	1SNK156011R0000		5	11.00
B (x100)	White	MC612PA	1SNK156021R0000		5	11.00
C (x100)	White	MC612PA	1SNK156031R0000		5	11.00
D (x100)	White	MC612PA	1SNK156041R0000		5	11.00
E (x100)	White	MC612PA	1SNK156051R0000		5	11.00
F (x100)	White	MC612PA	1SNK156061R0000		5	11.00
G (x100)	White	MC612PA	1SNK156071R0000		5	11.00
H (x100)	White	MC612PA	1SNK156081R0000		5	11.00
I (x100)	White	MC612PA	1SNK156091R0000		5	11.00
J (x100)	White	MC612PA	1SNK156101R0000		5	11.00
K (x100)	White	MC612PA	1SNK156111R0000		5	11.00

1SNC160161S0201

Continue on next page →

6 mm 0.236 in spacing - horizontal mounting

Ordering details

Description	Color	Type	Part Number		Pkg card	Weight (1 card) g
← Continuation of previous page						
L (x100)	White ☐	MC612PA	1SNK156121R0000		5	11.00
M (x100)	White ☐	MC612PA	1SNK156131R0000		5	11.00
N (x100)	White ☐	MC612PA	1SNK156141R0000		5	11.00
O (x100)	White ☐	MC612PA	1SNK156151R0000		5	11.00
P (x100)	White ☐	MC612PA	1SNK156161R0000		5	11.00
Q (x100)	White ☐	MC612PA	1SNK156171R0000		5	11.00
R (x100)	White ☐	MC612PA	1SNK156181R0000		5	11.00
S (x100)	White ☐	MC612PA	1SNK156191R0000		5	11.00
T (x100)	White ☐	MC612PA	1SNK156201R0000		5	11.00
U (x100)	White ☐	MC612PA	1SNK156211R0000		5	11.00
V (x100)	White ☐	MC612PA	1SNK156221R0000		5	11.00
W (x100)	White ☐	MC612PA	1SNK156231R0000		5	11.00
X (x100)	White ☐	MC612PA	1SNK156241R0000		5	11.00
Y (x100)	White ☐	MC612PA	1SNK156251R0000		5	11.00
Z (x100)	White ☐	MC612PA	1SNK156261R0000		5	11.00

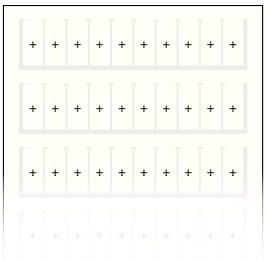

Card with 100 markers, repeated identical symbols

+ (x100)	White ☐	MC612PA	1SNK158001R0000		5	11.00
- (x100)	White ☐	MC612PA	1SNK158011R0000		5	11.00
~ (x100)	White ☐	MC612PA	1SNK158021R0000		5	11.00
= (x100)	White ☐	MC612PA	1SNK158031R0000		5	11.00
⏚ (x100)	White ☐	MC612PA	1SNK158041R0000		5	11.00
L1 (x100)	White ☐	MC612PA	1SNK158051R0000		5	11.00
L2 (x100)	White ☐	MC612PA	1SNK158061R0000		5	11.00
L3 (x100)	White ☐	MC612PA	1SNK158071R0000		5	11.00
PE (x100)	White ☐	MC612PA	1SNK158091R0000		5	11.00
U1 (x100)	White ☐	MC612PA	1SNK158101R0000		5	11.00
U2 (x100)	White ☐	MC612PA	1SNK158111R0000		5	11.00
U3 (x100)	White ☐	MC612PA	1SNK158121R0000		5	11.00
V1 (x100)	White ☐	MC612PA	1SNK158131R0000		5	11.00
V2 (x100)	White ☐	MC612PA	1SNK158141R0000		5	11.00
V3 (x100)	White ☐	MC612PA	1SNK158151R0000		5	11.00
W1 (x100)	White ☐	MC612PA	1SNK158161R0000		5	11.00
W2 (x100)	White ☐	MC612PA	1SNK158171R0000		5	11.00
W3 (x100)	White ☐	MC612PA	1SNK158181R0000		5	11.00

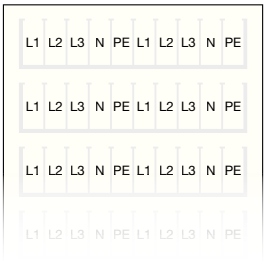

Card with 100 markers, 5 different symbols repeated 20 times

L1-L2-L3-N-PE (x20)	White ☐	MC612PA	1SNK159001R0000		5	11.00

Card with 100 markers, 9 different symbols repeated 10 times

U1-U2-U3-V1-V2-V3-W1-W2-W3 (x10) + U1 (x10)	White ☐	MC612PA	1SNK159011R0000		5	11.00

1SNC160161S0201

6 mm 0.236 in spacing - vertical mounting

Vertical terminal block assembly

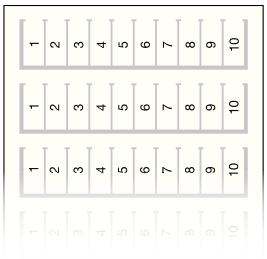

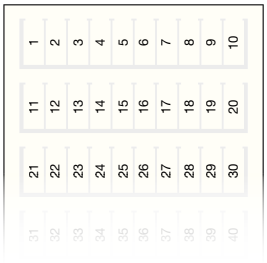

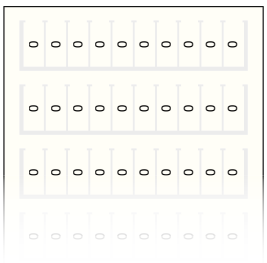

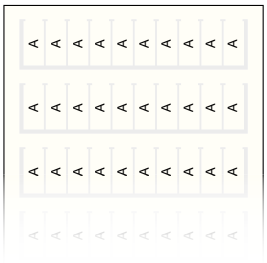

Description

– Save printing time with our large pre-printed card offer with pre-printed numbers, letters or symbols.

Main technical data

Material	Flammability
Polyamide	V2

Ordering details

Description	Color	Type	Part Number	Pkg card	Weight (1 card) g
Card with 100 markers, ascending order repeated 10 times					
1->10 (x10)	White	MC612PA	1SNK150012R0000	5	11.00
11->20 (x10)	White	MC612PA	1SNK150022R0000	5	11.00
21->30 (x10)	White	MC612PA	1SNK150032R0000	5	11.00
31->40 (x10)	White	MC612PA	1SNK150042R0000	5	11.00
41->50 (x10)	White	MC612PA	1SNK150052R0000	5	11.00
51->60 (x10)	White	MC612PA	1SNK150062R0000	5	11.00
61->70 (x10)	White	MC612PA	1SNK150072R0000	5	11.00
71->80 (x10)	White	MC612PA	1SNK150082R0000	5	11.00
81->90 (x10)	White	MC612PA	1SNK150084R0000	5	11.00
0->9 (x10)	White	MC612PA	1SNK150092R0000	5	11.00
91->100 (x10)	White	MC612PA	1SNK150102R0000	5	11.00
101->110 (x10)	White	MC612PA	1SNK150112R0000	5	11.00
111->120 (x10)	White	MC612PA	1SNK150122R0000	5	11.00
121->130 (x10)	White	MC612PA	1SNK150132R0000	5	11.00
131->140 (x10)	White	MC612PA	1SNK150142R0000	5	11.00
141->150 (x10)	White	MC612PA	1SNK150152R0000	5	11.00
151->160 (x10)	White	MC612PA	1SNK150162R0000	5	11.00
161->170 (x10)	White	MC612PA	1SNK150172R0000	5	11.00
171->180 (x10)	White	MC612PA	1SNK150182R0000	5	11.00
181->190 (x10)	White	MC612PA	1SNK150192R0000	5	11.00
191->200 (x10)	White	MC612PA	1SNK150202R0000	5	11.00
Card with 100 markers, ascending order					
1->100	White	MC612PA	1SNK155012R0000	5	11.00
101->200	White	MC612PA	1SNK155022R0000	5	11.00
201->300	White	MC612PA	1SNK155032R0000	5	11.00
301->400	White	MC612PA	1SNK155042R0000	5	11.00
401->500	White	MC612PA	1SNK155052R0000	5	11.00
501->600	White	MC612PA	1SNK155062R0000	5	11.00
601->700	White	MC612PA	1SNK155072R0000	5	11.00
701->800	White	MC612PA	1SNK155082R0000	5	11.00
801->900	White	MC612PA	1SNK155092R0000	5	11.00
901->1000	White	MC612PA	1SNK155102R0000	5	11.00
Card with 100 markers, repeated identical numbers					
0 (x100)	White	MC612PA	1SNK157002R0000	5	11.00
1 (x100)	White	MC612PA	1SNK157012R0000	5	11.00
2 (x100)	White	MC612PA	1SNK157022R0000	5	11.00
3 (x100)	White	MC612PA	1SNK157032R0000	5	11.00
4 (x100)	White	MC612PA	1SNK157042R0000	5	11.00
5 (x100)	White	MC612PA	1SNK157052R0000	5	11.00
6 (x100)	White	MC612PA	1SNK157062R0000	5	11.00
7 (x100)	White	MC612PA	1SNK157072R0000	5	11.00
8 (x100)	White	MC612PA	1SNK157082R0000	5	11.00
9 (x100)	White	MC612PA	1SNK157092R0000	5	11.00
Card with 100 markers, repeated identical letters					
A (x100)	White	MC612PA	1SNK156012R0000	5	11.00
B (x100)	White	MC612PA	1SNK156022R0000	5	11.00
C (x100)	White	MC612PA	1SNK156032R0000	5	11.00
D (x100)	White	MC612PA	1SNK156042R0000	5	11.00
E (x100)	White	MC612PA	1SNK156052R0000	5	11.00
F (x100)	White	MC612PA	1SNK156062R0000	5	11.00
G (x100)	White	MC612PA	1SNK156072R0000	5	11.00
H (x100)	White	MC612PA	1SNK156082R0000	5	11.00
I (x100)	White	MC612PA	1SNK156092R0000	5	11.00
J (x100)	White	MC612PA	1SNK156102R0000	5	11.00

Continue on next page →

1SNC160162S0201

6 mm 0.236 in spacing - vertical mounting

Ordering details

Description	Color	Type	Part Number		Pkg card	Weight (1 card) g
← Continuation of previous page						
K (x100)	White	MC612PA	1SNK156112R0000		5	11.00
L (x100)	White	MC612PA	1SNK156122R0000		5	11.00
M (x100)	White	MC612PA	1SNK156132R0000		5	11.00
N (x100)	White	MC612PA	1SNK156142R0000		5	11.00
O (x100)	White	MC612PA	1SNK156152R0000		5	11.00
P (x100)	White	MC612PA	1SNK156162R0000		5	11.00
Q (x100)	White	MC612PA	1SNK156172R0000		5	11.00
R (x100)	White	MC612PA	1SNK156182R0000		5	11.00
S (x100)	White	MC612PA	1SNK156192R0000		5	11.00
T (x100)	White	MC612PA	1SNK156202R0000		5	11.00
U (x100)	White	MC612PA	1SNK156212R0000		5	11.00
V (x100)	White	MC612PA	1SNK156222R0000		5	11.00
W (x100)	White	MC612PA	1SNK156232R0000		5	11.00
X (x100)	White	MC612PA	1SNK156242R0000		5	11.00
Y (x100)	White	MC612PA	1SNK156252R0000		5	11.00
Z (x100)	White	MC612PA	1SNK156262R0000		5	11.00

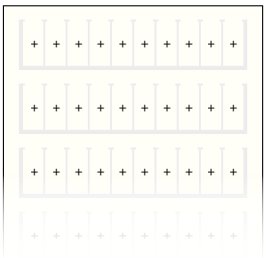

Card with 100 markers, repeated identical symbols

+ (x100)	White	MC612PA	1SNK158002R0000		5	11.00
- (x100)	White	MC612PA	1SNK158012R0000		5	11.00
~ (x100)	White	MC612PA	1SNK158022R0000		5	11.00
= (x100)	White	MC612PA	1SNK158032R0000		5	11.00
⏚ (x100)	White	MC612PA	1SNK158042R0000		5	11.00
L1 (x100)	White	MC612PA	1SNK158052R0000		5	11.00
L2 (x100)	White	MC612PA	1SNK158062R0000		5	11.00
L3 (x100)	White	MC612PA	1SNK158072R0000		5	11.00
PE (x100)	White	MC612PA	1SNK158092R0000		5	11.00
U1 (x100)	White	MC612PA	1SNK158102R0000		5	11.00
U2 (x100)	White	MC612PA	1SNK158112R0000		5	11.00
U3 (x100)	White	MC612PA	1SNK158122R0000		5	11.00
V1 (x100)	White	MC612PA	1SNK158132R0000		5	11.00
V2 (x100)	White	MC612PA	1SNK158142R0000		5	11.00
V3 (x100)	White	MC612PA	1SNK158152R0000		5	11.00
W1 (x100)	White	MC612PA	1SNK158162R0000		5	11.00
W2 (x100)	White	MC612PA	1SNK158172R0000		5	11.00
W3 (x100)	White	MC612PA	1SNK158182R0000		5	11.00
+24V (x100)	White	MC612PA	1SNK158192R0000		5	11.00
+48V (x100)	White	MC612PA	1SNK158202R0000		5	11.00
- 24V (x100)	White	MC612PA	1SNK158212R0000		5	11.00
-48V (x100)	White	MC612PA	1SNK158222R0000		5	11.00

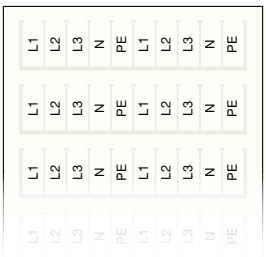

Card with 100 markers, 5 different symbols repeated 20 times

L1-L2-L3-N-PE (x20)	White	MC612PA	1SNK159002R0000		5	11.00

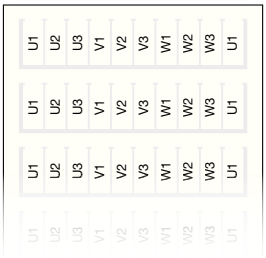

Card with 100 markers, 9 different symbols repeated 10 times

U1-U2-U3-V1-V2-V3-W1-W2-W3 (x10) + U1 (x10)	White	MC612PA	1SNK159012R0000		5	11.00

1SNC160162S0201

8 mm 0.315 in spacing - horizontal mounting

1SNC160191F0014

Horizontal terminal block assembly

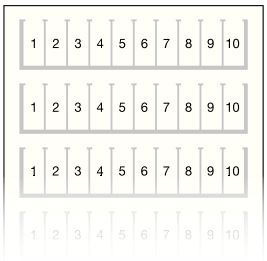

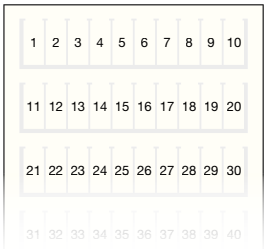

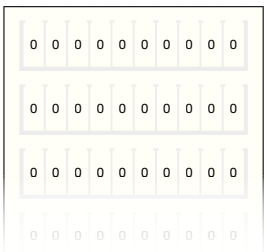

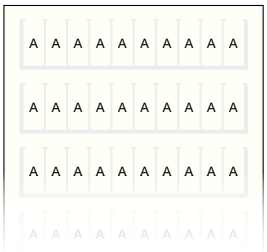

Description

– Save printing time with our large pre-printed card offer with pre-printed numbers, letters or symbols.

Main technical data

Material	Flammability
Polyamide	V2

Ordering details

Description	Color	Type	Part Number		Pkg card	Weight (1 card) g
Card with 100 markers, ascending order repeated 10 times						
0->9 (x10)	White ☐	MC812PA	1SNK160091R0000		5	14.00
1->10 (x10)	White ☐	MC812PA	1SNK160011R0000		5	14.00
11->20 (x10)	White ☐	MC812PA	1SNK160021R0000		5	14.00
21->30 (x10)	White ☐	MC812PA	1SNK160031R0000		5	14.00
31->40 (x10)	White ☐	MC812PA	1SNK160041R0000		5	14.00
41->50 (x10)	White ☐	MC812PA	1SNK160051R0000		5	14.00
51->60 (x10)	White ☐	MC812PA	1SNK160061R0000		5	14.00
61->70 (x10)	White ☐	MC812PA	1SNK160071R0000		5	14.00
71->80 (x10)	White ☐	MC812PA	1SNK160081R0000		5	14.00
81->90 (x10)	White ☐	MC812PA	1SNK160083R0000		5	14.00
91->100 (x10)	White ☐	MC812PA	1SNK160101R0000		5	14.00
101->110 (x10)	White ☐	MC812PA	1SNK160111R0000		5	14.00
111->120 (x10)	White ☐	MC812PA	1SNK160121R0000		5	14.00
121->130 (x10)	White ☐	MC812PA	1SNK160131R0000		5	14.00
131->140 (x10)	White ☐	MC812PA	1SNK160141R0000		5	14.00
141->150 (x10)	White ☐	MC812PA	1SNK160151R0000		5	14.00
151->160 (x10)	White ☐	MC812PA	1SNK160161R0000		5	14.00
161->170 (x10)	White ☐	MC812PA	1SNK160171R0000		5	14.00
171->180 (x10)	White ☐	MC812PA	1SNK160181R0000		5	14.00
181->190 (x10)	White ☐	MC812PA	1SNK160191R0000		5	14.00
191->200 (x10)	White ☐	MC812PA	1SNK160201R0000		5	14.00
Card with 100 markers, ascending order						
1->100	White ☐	MC812PA	1SNK165011R0000		5	14.00
101->200	White ☐	MC812PA	1SNK165021R0000		5	14.00
201->300	White ☐	MC812PA	1SNK165031R0000		5	14.00
301->400	White ☐	MC812PA	1SNK165041R0000		5	14.00
401->500	White ☐	MC812PA	1SNK165051R0000		5	14.00
501->600	White ☐	MC812PA	1SNK165061R0000		5	14.00
601->700	White ☐	MC812PA	1SNK165071R0000		5	14.00
701->800	White ☐	MC812PA	1SNK165081R0000		5	14.00
801->900	White ☐	MC812PA	1SNK165091R0000		5	14.00
Card with 100 markers, repeated identical numbers						
0 (x100)	White ☐	MC812PA	1SNK167001R0000		5	14.00
1 (x100)	White ☐	MC812PA	1SNK167011R0000		5	14.00
2 (x100)	White ☐	MC812PA	1SNK167021R0000		5	14.00
3 (x100)	White ☐	MC812PA	1SNK167031R0000		5	14.00
4 (x100)	White ☐	MC812PA	1SNK167041R0000		5	14.00
5 (x100)	White ☐	MC812PA	1SNK167051R0000		5	14.00
6 (x100)	White ☐	MC812PA	1SNK167061R0000		5	14.00
7 (x100)	White ☐	MC812PA	1SNK167071R0000		5	14.00
8 (x100)	White ☐	MC812PA	1SNK167081R0000		5	14.00
9 (x100)	White ☐	MC812PA	1SNK167091R0000		5	14.00
Card with 100 markers, repeated identical letters						
A (x100)	White ☐	MC812PA	1SNK166011R0000		5	14.00
B (x100)	White ☐	MC812PA	1SNK166021R0000		5	14.00
C (x100)	White ☐	MC812PA	1SNK166031R0000		5	14.00
D (x100)	White ☐	MC812PA	1SNK166041R0000		5	14.00
E (x100)	White ☐	MC812PA	1SNK166051R0000		5	14.00
F (x100)	White ☐	MC812PA	1SNK166061R0000		5	14.00
G (x100)	White ☐	MC812PA	1SNK166071R0000		5	14.00
H (x100)	White ☐	MC812PA	1SNK166081R0000		5	14.00
I (x100)	White ☐	MC812PA	1SNK166091R0000		5	14.00
J (x100)	White ☐	MC812PA	1SNK166101R0000		5	14.00
K (x100)	White ☐	MC812PA	1SNK166111R0000		5	14.00

1SNC160163S0201

Continue on next page →

8 mm 0.315 in spacing - horizontal mounting

Ordering details

Description	Color	Type	Part Number		Pkg card	Weight (1 card) g
← Continuation of previous page						
L (x100)	White ☐	MC812PA	1SNK166121R0000		5	14.00
M (x100)	White ☐	MC812PA	1SNK166131R0000		5	14.00
N (x100)	White ☐	MC812PA	1SNK166141R0000		5	14.00
O (x100)	White ☐	MC812PA	1SNK166151R0000		5	14.00
P (x100)	White ☐	MC812PA	1SNK166161R0000		5	14.00
Q (x100)	White ☐	MC812PA	1SNK166171R0000		5	14.00
R (x100)	White ☐	MC812PA	1SNK166181R0000		5	14.00
S (x100)	White ☐	MC812PA	1SNK166191R0000		5	14.00
T (x100)	White ☐	MC812PA	1SNK166201R0000		5	14.00
U (x100)	White ☐	MC812PA	1SNK166211R0000		5	14.00
V (x100)	White ☐	MC812PA	1SNK166221R0000		5	14.00
W (x100)	White ☐	MC812PA	1SNK166231R0000		5	14.00
X (x100)	White ☐	MC812PA	1SNK166241R0000		5	14.00
Y (x100)	White ☐	MC812PA	1SNK166251R0000		5	14.00
Z (x100)	White ☐	MC812PA	1SNK166261R0000		5	14.00

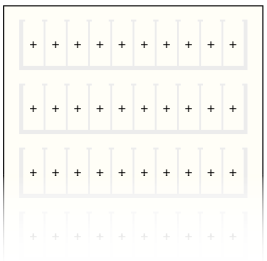

Card with 100 markers, repeated identical symbols

+ (x100)	White ☐	MC812PA	1SNK168001R0000		5	14.00
- (x100)	White ☐	MC812PA	1SNK168011R0000		5	14.00
~ (x100)	White ☐	MC812PA	1SNK168021R0000		5	14.00
= (x100)	White ☐	MC812PA	1SNK168031R0000		5	14.00
⏚ (x100)	White ☐	MC812PA	1SNK168041R0000		5	14.00
L1 (x100)	White ☐	MC812PA	1SNK168051R0000		5	14.00
L2 (x100)	White ☐	MC812PA	1SNK168061R0000		5	14.00
L3 (x100)	White ☐	MC812PA	1SNK168071R0000		5	14.00
PE (x100)	White ☐	MC812PA	1SNK168091R0000		5	14.00
U1 (x100)	White ☐	MC812PA	1SNK168101R0000		5	14.00
U2 (x100)	White ☐	MC812PA	1SNK168111R0000		5	14.00
U3 (x100)	White ☐	MC812PA	1SNK168121R0000		5	14.00
V1 (x100)	White ☐	MC812PA	1SNK168131R0000		5	14.00
V2 (x100)	White ☐	MC812PA	1SNK168141R0000		5	14.00
V3 (x100)	White ☐	MC812PA	1SNK168151R0000		5	14.00
W1 (x100)	White ☐	MC812PA	1SNK168161R0000		5	14.00
W2 (x100)	White ☐	MC812PA	1SNK168171R0000		5	14.00
W3 (x100)	White ☐	MC812PA	1SNK168181R0000		5	14.00

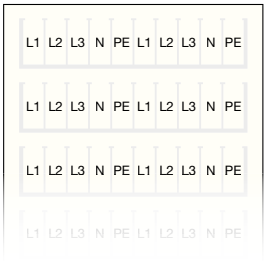

Card with 100 markers, 5 different symbols repeated 20 times

L1-L2-L3-N-PE (x20)	White ☐	MC812PA	1SNK169001R0000		5	14.00

Card with 100 markers, 9 different symbols repeated 10 times

U1-U2-U3-V1-V2-V3-W1-W2-W3 (x10) + U1 (x10)	White ☐	MC812PA	1SNK169011R0000		5	14.00

1SNC160163S0201

8 mm 0.315 in spacing - vertical mounting

Vertical terminal block assembly

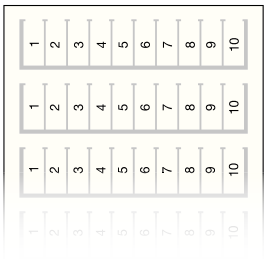

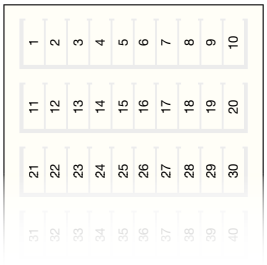

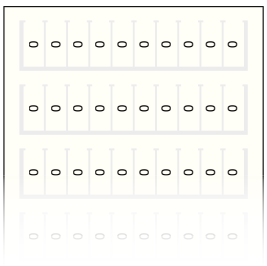

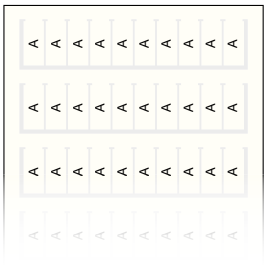

Description

– Save printing time with our large pre-printed card offer with pre-printed numbers, letters or symbols.

Main technical data

Material	Flammability
Polyamide	V2

Ordering details

Description	Color	Type	Part Number		Pkg card	Weight (1 card) g
Card with 100 markers, ascending order repeated 10 times						
0->9 (x10)	White	MC812PA	1SNK160092R0000		5	14.00
1->10 (x10)	White	MC812PA	1SNK160012R0000		5	14.00
11->20 (x10)	White	MC812PA	1SNK160022R0000		5	14.00
21->30 (x10)	White	MC812PA	1SNK160032R0000		5	14.00
31->40 (x10)	White	MC812PA	1SNK160042R0000		5	14.00
41->50 (x10)	White	MC812PA	1SNK160052R0000		5	14.00
51->60 (x10)	White	MC812PA	1SNK160062R0000		5	14.00
61->70 (x10)	White	MC812PA	1SNK160072R0000		5	14.00
71->80 (x10)	White	MC812PA	1SNK160082R0000		5	14.00
81->90 (x10)	White	MC812PA	1SNK160084R0000		5	14.00
91->100 (x10)	White	MC812PA	1SNK160102R0000		5	14.00
101->110 (x10)	White	MC812PA	1SNK160112R0000		5	14.00
111->120 (x10)	White	MC812PA	1SNK160122R0000		5	14.00
121->130 (x10)	White	MC812PA	1SNK160132R0000		5	14.00
131->140 (x10)	White	MC812PA	1SNK160142R0000		5	14.00
141->150 (x10)	White	MC812PA	1SNK160152R0000		5	14.00
151->160 (x10)	White	MC812PA	1SNK160162R0000		5	14.00
161->170 (x10)	White	MC812PA	1SNK160172R0000		5	14.00
171->180 (x10)	White	MC812PA	1SNK160182R0000		5	14.00
181->190 (x10)	White	MC812PA	1SNK160192R0000		5	14.00
191->200 (x10)	White	MC812PA	1SNK160202R0000		5	14.00
Card with 100 markers, ascending order						
1->100	White	MC812PA	1SNK165012R0000		5	14.00
101->200	White	MC812PA	1SNK165022R0000		5	14.00
201->300	White	MC812PA	1SNK165032R0000		5	14.00
301->400	White	MC812PA	1SNK165042R0000		5	14.00
401->500	White	MC812PA	1SNK165052R0000		5	14.00
501->600	White	MC812PA	1SNK165062R0000		5	14.00
601->700	White	MC812PA	1SNK165072R0000		5	14.00
701->800	White	MC812PA	1SNK165082R0000		5	14.00
801->900	White	MC812PA	1SNK165092R0000		5	14.00
901->1000	White	MC812PA	1SNK165102R0000		5	14.00
Card with 100 markers, repeated identical numbers						
0 (x100)	White	MC812PA	1SNK167002R0000		5	14.00
1 (x100)	White	MC812PA	1SNK167012R0000		5	14.00
2 (x100)	White	MC812PA	1SNK167022R0000		5	14.00
3 (x100)	White	MC812PA	1SNK167032R0000		5	14.00
4 (x100)	White	MC812PA	1SNK167042R0000		5	14.00
5 (x100)	White	MC812PA	1SNK167052R0000		5	14.00
6 (x100)	White	MC812PA	1SNK167062R0000		5	14.00
7 (x100)	White	MC812PA	1SNK167072R0000		5	14.00
8 (x100)	White	MC812PA	1SNK167082R0000		5	14.00
9 (x100)	White	MC812PA	1SNK167092R0000		5	14.00
Card with 100 markers, repeated identical letters						
A (x100)	White	MC812PA	1SNK166012R0000		5	14.00
B (x100)	White	MC812PA	1SNK166022R0000		5	14.00
C (x100)	White	MC812PA	1SNK166032R0000		5	14.00
D (x100)	White	MC812PA	1SNK166042R0000		5	14.00
E (x100)	White	MC812PA	1SNK166052R0000		5	14.00
F (x100)	White	MC812PA	1SNK166062R0000		5	14.00
G (x100)	White	MC812PA	1SNK166072R0000		5	14.00
H (x100)	White	MC812PA	1SNK166082R0000		5	14.00
I (x100)	White	MC812PA	1SNK166092R0000		5	14.00
J (x100)	White	MC812PA	1SNK166102R0000		5	14.00

1SNC160164S0201

Continue on next page →

8 mm 0.315 in spacing - vertical mounting

Ordering details

Description	Color	Type	Part Number		Pkg card	Weight (1 card) g
← Continuation of previous page						
K (x100)	White	MC812PA	1SNK166112R0000		5	14.00
L (x100)	White	MC812PA	1SNK166122R0000		5	14.00
M (x100)	White	MC812PA	1SNK166132R0000		5	14.00
N (x100)	White	MC812PA	1SNK166142R0000		5	14.00
O (x100)	White	MC812PA	1SNK166152R0000		5	14.00
P (x100)	White	MC812PA	1SNK166162R0000		5	14.00
Q (x100)	White	MC812PA	1SNK166172R0000		5	14.00
R (x100)	White	MC812PA	1SNK166182R0000		5	14.00
S (x100)	White	MC812PA	1SNK166192R0000		5	14.00
T (x100)	White	MC812PA	1SNK166202R0000		5	14.00
U (x100)	White	MC812PA	1SNK166212R0000		5	14.00
V (x100)	White	MC812PA	1SNK166222R0000		5	14.00
W (x100)	White	MC812PA	1SNK166232R0000		5	14.00
X (x100)	White	MC812PA	1SNK166242R0000		5	14.00
Y (x100)	White	MC812PA	1SNK166252R0000		5	14.00
Z (x100)	White	MC812PA	1SNK166262R0000		5	14.00

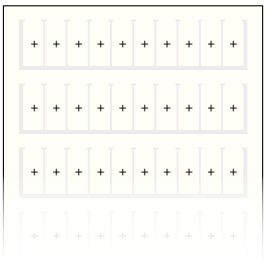

Card with 100 markers, repeated identical symbols

+ (x100)	White	MC812PA	1SNK168002R0000		5	14.00
- (x100)	White	MC812PA	1SNK168012R0000		5	14.00
~ (x100)	White	MC812PA	1SNK168022R0000		5	14.00
= (x100)	White	MC812PA	1SNK168032R0000		5	14.00
⏚ (x100)	White	MC812PA	1SNK168042R0000		5	14.00
L1 (x100)	White	MC812PA	1SNK168052R0000		5	14.00
L2 (x100)	White	MC812PA	1SNK168062R0000		5	14.00
L3 (x100)	White	MC812PA	1SNK168072R0000		5	14.00
PE (x100)	White	MC812PA	1SNK168092R0000		5	14.00
U1 (x100)	White	MC812PA	1SNK168102R0000		5	14.00
U2 (x100)	White	MC812PA	1SNK168112R0000		5	14.00
U3 (x100)	White	MC812PA	1SNK168122R0000		5	14.00
V1 (x100)	White	MC812PA	1SNK168132R0000		5	14.00
V2 (x100)	White	MC812PA	1SNK168142R0000		5	14.00
V3 (x100)	White	MC812PA	1SNK168152R0000		5	14.00
W1 (x100)	White	MC812PA	1SNK168162R0000		5	14.00
W2 (x100)	White	MC812PA	1SNK168172R0000		5	14.00
W3 (x100)	White	MC812PA	1SNK168182R0000		5	14.00
+24V (x100)	White	MC812PA	1SNK168192R0000		5	14.00
+48V (x100)	White	MC812PA	1SNK168202R0000		5	14.00
-24V (x100)	White	MC812PA	1SNK168212R0000		5	14.00
-48V (x100)	White	MC812PA	1SNK168222R0000		5	14.00

Card with 100 markers, 5 different symbols repeated 20 times

L1-L2-L3-N-PE (x20)	White	MC812PA	1SNK169002R0000		5	14.00

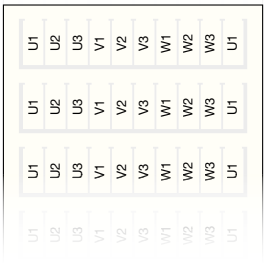

Card with 100 markers, 9 different symbols repeated 10 times

U1-U2-U3-V1-V2-V3-W1-W2-W3 (x10) + U1 (x10)	White	MC812PA	1SNK169012R0000		5	14.00

5

1SNC160164S0201

4 mm 0.157 in spacing - horizontal mounting

1SNC160191R0014

Horizontal terminal block assembly

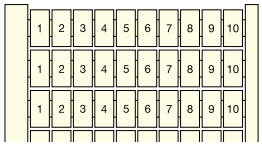

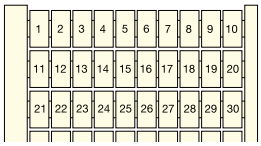

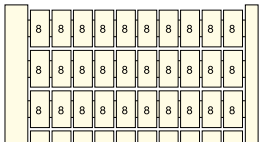

Description

- Save printing time with our large pre-printed card offer with pre-printed numbers, letters or symbols,
- To be used to mark spring clamp terminal blocks and screw clamp miniblocks (DR..) from the SNA and Solution series.

Main technical data

Material	Flammability
Polyamide	V2

Ordering details

Description	Color	Type	Part Number	Pkg card	Weight (1 card) g
Card with 100 markers, ascending order repeated 10 times					
0->9 (x10)	White ☐	RC410	1SNA229001R0200	5	5.20
1->10 (x10)	White ☐	RC410	1SNA229002R0300	5	5.20
11->20 (x10)	White ☐	RC410	1SNA229003R0400	5	5.20
21->30 (x10)	White ☐	RC410	1SNA229004R0500	5	5.20
31->40 (x10)	White ☐	RC410	1SNA229005R0600	5	5.20
41->50 (x10)	White ☐	RC410	1SNA229006R0700	5	5.20
51->60 (x10)	White ☐	RC410	1SNA229007R0000	5	5.20
61->70 (x10)	White ☐	RC410	1SNA229008R1100	5	5.20
71->80 (x10)	White ☐	RC410	1SNA229009R1200	5	5.20
81->90 (x10)	White ☐	RC410	1SNA229010R0600	5	5.20
91->100 (x10)	White ☐	RC410	1SNA229011R2300	5	5.20
Card with 100 markers, ascending order					
1->100	White ☐	RC410	1SNA229030R0200	5	5.20
Card with 100 markers, repeated identical numbers					
0 (x100)	White ☐	RC410	1SNA229210R1300	5	5.20
1 (x100)	White ☐	RC410	1SNA229211R0000	5	5.20
2 (x100)	White ☐	RC410	1SNA229212R0100	5	5.20
3 (x100)	White ☐	RC410	1SNA229213R0200	5	5.20
4 (x100)	White ☐	RC410	1SNA229214R0300	5	5.20
5 (x100)	White ☐	RC410	1SNA229215R0400	5	5.20
6 (x100) / 9 (x100)	White ☐	RC410	1SNA229216R0500	5	5.20
7 (x100)	White ☐	RC410	1SNA229217R0600	5	5.20
8 (x100)	White ☐	RC410	1SNA229218R1700	5	5.20
10 (x100)	White ☐	RC410	1SNA229220R1500	5	5.20
11 (x100)	White ☐	RC410	1SNA229221R0200	5	5.20
12 (x100)	White ☐	RC410	1SNA229222R0300	5	5.20
13 (x100)	White ☐	RC410	1SNA229223R0400	5	5.20
14 (x100)	White ☐	RC410	1SNA229224R0500	5	5.20
15 (x100)	White ☐	RC410	1SNA229225R0600	5	5.20
16 (x100)	White ☐	RC410	1SNA229226R0700	5	5.20
17 (x100)	White ☐	RC410	1SNA229227R0000	5	5.20
18 (x100)	White ☐	RC410	1SNA229228R1100	5	5.20
19 (x100)	White ☐	RC410	1SNA229229R1200	5	5.20
20 (x100)	White ☐	RC410	1SNA229230R1700	5	5.20

Continue on next page →

1SNC160138S0201

4 mm 0.157 in spacing - horizontal mounting

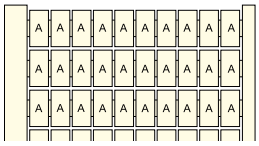

Ordering details

Description	Color	Type	Part Number		Pkg card	Weight (1 card) g
← Continuation of previous page						
Card with 100 markers, repeated identical letters						
A (x100)	White ☐	RC410	1SNA229150R1700		5	5.20
B (x100)	White ☐	RC410	1SNA229151R0400		5	5.20
C (x100)	White ☐	RC410	1SNA229152R0500		5	5.20
D (x100)	White ☐	RC410	1SNA229153R0600		5	5.20
E (x100)	White ☐	RC410	1SNA229154R0700		5	5.20
F (x100)	White ☐	RC410	1SNA229155R0000		5	5.20
G (x100)	White ☐	RC410	1SNA229156R0100		5	5.20
H (x100)	White ☐	RC410	1SNA229157R0200		5	5.20
I (x100)	White ☐	RC410	1SNA229158R1300		5	5.20
J (x100)	White ☐	RC410	1SNA229159R1400		5	5.20
K (x100)	White ☐	RC410	1SNA229160R1100		5	5.20
L (x100)	White ☐	RC410	1SNA229161R0600		5	5.20
M (x100)	White ☐	RC410	1SNA229162R0700		5	5.20
N (x100)	White ☐	RC410	1SNA229163R0000		5	5.20
O (x100)	White ☐	RC410	1SNA229164R0100		5	5.20
P (x100)	White ☐	RC410	1SNA229165R0200		5	5.20
Q (x100)	White ☐	RC410	1SNA229166R0300		5	5.20
R (x100)	White ☐	RC410	1SNA229167R0400		5	5.20
S (x100)	White ☐	RC410	1SNA229168R1500		5	5.20
T (x100)	White ☐	RC410	1SNA229169R1600		5	5.20
U (x100)	White ☐	RC410	1SNA229170R1300		5	5.20
V (x100)	White ☐	RC410	1SNA229171R0000		5	5.20
W (x100)	White ☐	RC410	1SNA229172R0100		5	5.20
X (x100)	White ☐	RC410	1SNA229173R0200		5	5.20
Y (x100)	White ☐	RC410	1SNA229174R0300		5	5.20
Z (x100)	White ☐	RC410	1SNA229175R0400		5	5.20
Card with 100 markers, repeated identical symbols						
+ (x100)	White ☐	RC410	1SNA229111R2400		5	5.20
- (x100)	White ☐	RC410	1SNA229112R2500		5	5.20
= (x100)	White ☐	RC410	1SNA229113R2600		5	5.20
~ (x100)	White ☐	RC410	1SNA229114R2700		5	5.20
⏚ (x100)	White ☐	RC410	1SNA229115R2000		5	5.20

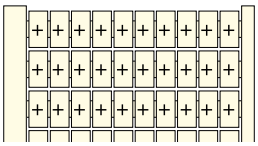

1SNC160138S0201

4 mm 0.157 in spacing - vertical mounting

Vertical terminal block assembly

Description

- Save printing time with our large pre-printed card offer with pre-printed numbers, letters or symbols,
- To be used to mark spring clamp terminal blocks and screw clamp miniblocks (DR..) from the SNA and Solution series.

Main technical data

Material	Flammability
Polyamide	V2

Ordering details

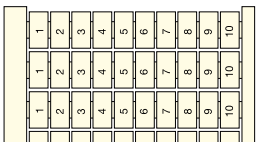

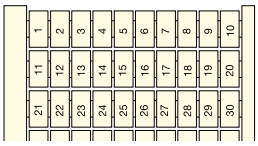

Description	Color	Type	Part Number	Pkg card	Weight (1 card) g
Card with 100 markers, ascending order repeated 10 times					
0->9 (x10)	White ☐	RC410	1SNA229040R1400	5	5.20
1->10 (x10)	White ☐	RC410	1SNA229041R0100	5	5.20
11->20 (x10)	White ☐	RC410	1SNA229042R0200	5	5.20
21->30 (x10)	White ☐	RC410	1SNA229043R0300	5	5.20
31->40 (x10)	White ☐	RC410	1SNA229044R0400	5	5.20
41->50 (x10)	White ☐	RC410	1SNA229045R0500	5	5.20
51->60 (x10)	White ☐	RC410	1SNA229046R0600	5	5.20
61->70 (x10)	White ☐	RC410	1SNA229047R0700	5	5.20
71->80 (x10)	White ☐	RC410	1SNA229048R1000	5	5.20
81->90 (x10)	White ☐	RC410	1SNA229049R1100	5	5.20
91->100 (x10)	White ☐	RC410	1SNA229050R1600	5	5.20
101->110 (x10)	White ☐	RC410	1SNA229051R0300	5	5.20
111->120 (x10)	White ☐	RC410	1SNA229052R0400	5	5.20
121->130 (x10)	White ☐	RC410	1SNA229053R0500	5	5.20
131->140 (x10)	White ☐	RC410	1SNA229054R0600	5	5.20
141->150 (x10)	White ☐	RC410	1SNA229055R0700	5	5.20
151->160 (x10)	White ☐	RC410	1SNA229056R0000	5	5.20
161->170 (x10)	White ☐	RC410	1SNA229057R0100	5	5.20
171->180 (x10)	White ☐	RC410	1SNA229058R1200	5	5.20
181->190 (x10)	White ☐	RC410	1SNA229059R1300	5	5.20
191->200 (x10)	White ☐	RC410	1SNA229072R0000	5	5.20
Card with 100 markers, ascending order					
1->100	White ☐	RC410	1SNA229060R1000	5	5.20
101->200	White ☐	RC410	1SNA229061R0500	5	5.20
201->300	White ☐	RC410	1SNA229062R0600	5	5.20
301->400	White ☐	RC410	1SNA229063R0700	5	5.20
401->500	White ☐	RC410	1SNA229064R0000	5	5.20
501->600	White ☐	RC410	1SNA229065R0100	5	5.20
601->700	White ☐	RC410	1SNA229066R0200	5	5.20
701->800	White ☐	RC410	1SNA229067R0300	5	5.20
801->900	White ☐	RC410	1SNA229068R1400	5	5.20
901->1000	White ☐	RC410	1SNA229069R1500	5	5.20

Continue on next page →

1SNC160139S0201

4 mm 0.157 in spacing - vertical mounting

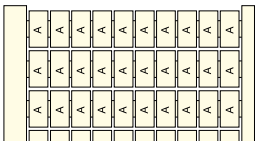

Ordering details

Description	Color	Type	Part Number		Pkg card	Weight (1 card) g
← Continuation of previous page						
Card with 100 markers, repeated identical letters						
A (x100)	White ☐	RC410	1SNA229180R0600		5	5.20
B (x100)	White ☐	RC410	1SNA229181R2300		5	5.20
C (x100)	White ☐	RC410	1SNA229182R2400		5	5.20
D (x100)	White ☐	RC410	1SNA229183R2500		5	5.20
E (x100)	White ☐	RC410	1SNA229184R2600		5	5.20
F (x100)	White ☐	RC410	1SNA229185R2700		5	5.20
G (x100)	White ☐	RC410	1SNA229186R2000		5	5.20
H (x100)	White ☐	RC410	1SNA229187R2100		5	5.20
I (x100)	White ☐	RC410	1SNA229188R0200		5	5.20
J (x100)	White ☐	RC410	1SNA229189R0300		5	5.20
K (x100)	White ☐	RC410	1SNA229190R0000		5	5.20
L (x100)	White ☐	RC410	1SNA229191R2500		5	5.20
M (x100)	White ☐	RC410	1SNA229192R2600		5	5.20
N (x100)	White ☐	RC410	1SNA229193R2700		5	5.20
O (x100)	White ☐	RC410	1SNA229194R2000		5	5.20
P (x100)	White ☐	RC410	1SNA229195R2100		5	5.20
Q (x100)	White ☐	RC410	1SNA229196R2200		5	5.20
R (x100)	White ☐	RC410	1SNA229197R2300		5	5.20
S (x100)	White ☐	RC410	1SNA229198R0400		5	5.20
T (x100)	White ☐	RC410	1SNA229199R0500		5	5.20
U (x100)	White ☐	RC410	1SNA229200R2200		5	5.20
V (x100)	White ☐	RC410	1SNA229201R1700		5	5.20
W (x100)	White ☐	RC410	1SNA229202R1000		5	5.20
X (x100)	White ☐	RC410	1SNA229203R1100		5	5.20
Y (x100)	White ☐	RC410	1SNA229204R1200		5	5.20
Z (x100)	White ☐	RC410	1SNA229205R1300		5	5.20

1SNC160139S0201

5 mm 0.197 in spacing - horizontal mounting

1SNC160191R0014

Horizontal terminal block assembly

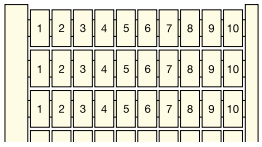

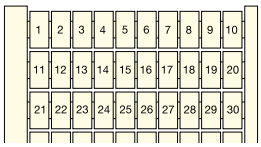

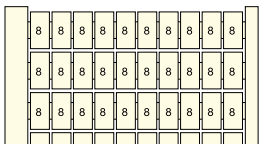

Description

- Save printing time with our large pre-printed card offer with pre-printed numbers, letters or symbols,
- To be used to mark screw clamp, spring clamp, ADO System® and screw clamp pluggable (side marking) terminal blocks from the SNA and Solution series.

Main technical data

Material	Flammability
Polyamide	V2

Ordering details

Description	Color	Type	Part Number	Pkg card	Weight (1 card) g
Card with 100 markers, ascending order repeated 10 times					
0->9 (x10)	White	RC510	1SNA231001R2400	5	5.50
1->10 (x10)	White	RC510	1SNA231002R2500	5	5.50
11->20 (x10)	White	RC510	1SNA231003R2600	5	5.50
21->30 (x10)	White	RC510	1SNA231004R2700	5	5.50
31->40 (x10)	White	RC510	1SNA231005R2000	5	5.50
41->50 (x10)	White	RC510	1SNA231006R2100	5	5.50
51->60 (x10)	White	RC510	1SNA231007R2200	5	5.50
61->70 (x10)	White	RC510	1SNA231008R0300	5	5.50
71->80 (x10)	White	RC510	1SNA231009R0400	5	5.50
81->90 (x10)	White	RC510	1SNA231010R2000	5	5.50
91->100 (x10)	White	RC510	1SNA231011R1500	5	5.50
101->110 (x10)	White	RC510	1SNA231012R1600	5	5.50
111->120 (x10)	White	RC510	1SNA231013R1700	5	5.50
121->130 (x10)	White	RC510	1SNA231014R1000	5	5.50
131->140 (x10)	White	RC510	1SNA231015R1100	5	5.50
141->150 (x10)	White	RC510	1SNA231016R1200	5	5.50
151->160 (x10)	White	RC510	1SNA231017R1300	5	5.50
161->170 (x10)	White	RC510	1SNA231018R2400	5	5.50
171->180 (x10)	White	RC510	1SNA231019R2500	5	5.50
181->190 (x10)	White	RC510	1SNA231020R2200	5	5.50
191->200 (x10)	White	RC510	1SNA231021R1700	5	5.50
Card with 100 markers, ascending order					
1->100	White	RC510	1SNA231030R2400	5	5.50
101->200	White	RC510	1SNA231031R1100	5	5.50
201->300	White	RC510	1SNA231032R1200	5	5.50
301->400	White	RC510	1SNA231033R1300	5	5.50
401->500	White	RC510	1SNA231034R1400	5	5.50
501->600	White	RC510	1SNA231035R1500	5	5.50
601->700	White	RC510	1SNA231036R1600	5	5.50
701->800	White	RC510	1SNA231037R1700	5	5.50
801->900	White	RC510	1SNA231038R2000	5	5.50
901->1000	White	RC510	1SNA231039R2100	5	5.50
Card with 100 markers, repeated identical numbers					
0 (x100)	White	RC510	1SNA231210R0500	5	5.50
1 (x100)	White	RC510	1SNA231211R2200	5	5.50
2 (x100)	White	RC510	1SNA231212R2300	5	5.50
3 (x100)	White	RC510	1SNA231213R2400	5	5.50
4 (x100)	White	RC510	1SNA231214R2500	5	5.50
5 (x100)	White	RC510	1SNA231215R2600	5	5.50
6 (x100) / 9 (x100)	White	RC510	1SNA231216R2700	5	5.50
7 (x100)	White	RC510	1SNA231217R2000	5	5.50
8 (x100)	White	RC510	1SNA231218R0100	5	5.50
10 (x100)	White	RC510	1SNA231220R0700	5	5.50
11 (x100)	White	RC510	1SNA231221R2400	5	5.50
12 (x100)	White	RC510	1SNA231222R2500	5	5.50
13 (x100)	White	RC510	1SNA231223R2600	5	5.50
14 (x100)	White	RC510	1SNA231224R2700	5	5.50
15 (x100)	White	RC510	1SNA231225R2000	5	5.50
16 (x100)	White	RC510	1SNA231226R2100	5	5.50
17 (x100)	White	RC510	1SNA231227R2200	5	5.50
18 (x100)	White	RC510	1SNA231228R0300	5	5.50
19 (x100)	White	RC510	1SNA231229R0400	5	5.50
20 (x100)	White	RC510	1SNA231230R0100	5	5.50

1SNC160140S0201

Continue on next page →

5 mm 0.197 in spacing - horizontal mounting

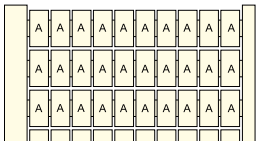

Ordering details

Description	Color	Type	Part Number		Pkg card	Weight (1 card) g
← Continuation of previous page						
Card with 100 markers, repeated identical letters						
A (x100)	White ☐	RC510	1SNA231150R0100		5	5.50
B (x100)	White ☐	RC510	1SNA231151R2600		5	5.50
C (x100)	White ☐	RC510	1SNA231152R2700		5	5.50
D (x100)	White ☐	RC510	1SNA231153R2000		5	5.50
E (x100)	White ☐	RC510	1SNA231154R2100		5	5.50
F (x100)	White ☐	RC510	1SNA231155R2200		5	5.50
G (x100)	White ☐	RC510	1SNA231156R2300		5	5.50
H (x100)	White ☐	RC510	1SNA231157R2400		5	5.50
I (x100)	White ☐	RC510	1SNA231158R0500		5	5.50
J (x100)	White ☐	RC510	1SNA231159R0600		5	5.50
K (x100)	White ☐	RC510	1SNA231160R0300		5	5.50
L (x100)	White ☐	RC510	1SNA231161R2000		5	5.50
M (x100)	White ☐	RC510	1SNA231162R2100		5	5.50
N (x100)	White ☐	RC510	1SNA231163R2200		5	5.50
O (x100)	White ☐	RC510	1SNA231164R2300		5	5.50
P (x100)	White ☐	RC510	1SNA231165R2400		5	5.50
Q (x100)	White ☐	RC510	1SNA231166R2500		5	5.50
R (x100)	White ☐	RC510	1SNA231167R2600		5	5.50
S (x100)	White ☐	RC510	1SNA231168R0700		5	5.50
T (x100)	White ☐	RC510	1SNA231169R0000		5	5.50
U (x100)	White ☐	RC510	1SNA231170R0500		5	5.50
V (x100)	White ☐	RC510	1SNA231171R2200		5	5.50
W (x100)	White ☐	RC510	1SNA231172R2300		5	5.50
X (x100)	White ☐	RC510	1SNA231173R2400		5	5.50
Y (x100)	White ☐	RC510	1SNA231174R2500		5	5.50
Z (x100)	White ☐	RC510	1SNA231175R2600		5	5.50

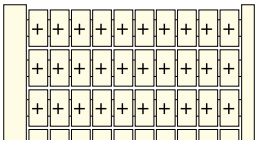

Card with 100 markers, repeated identical symbols						
+ (x100)	White ☐	RC510	1SNA231111R1600		5	5.50
- (x100)	White ☐	RC510	1SNA231112R1700		5	5.50
= (x100)	White ☐	RC510	1SNA231113R1000		5	5.50
~ (x100)	White ☐	RC510	1SNA231114R1100		5	5.50
⏚ (x100)	White ☐	RC510	1SNA231115R1200		5	5.50

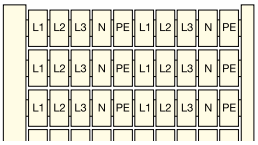

Card with 100 markers, 5 different symbols repeated 20 times						
L1-L2-L3-N-PE (x20)	White ☐	RC510	1SNA231131R1200		5	5.50

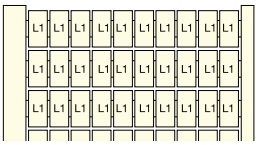

Card with 100 markers, repeated identical symbols						
L1 (x100)	White ☐	RC510	1SNA231116R1300		5	5.50
L2 (x100)	White ☐	RC510	1SNA231117R1400		5	5.50
L3 (x100)	White ☐	RC510	1SNA231118R2500		5	5.50
PE (x100)	White ☐	RC510	1SNA231119R2600		5	5.50

1SNC160140S0201

5 mm 0.197 in spacing - vertical mounting

1SNC160190R0014

Vertical terminal block assembly

Description

- Save printing time with our large pre-printed card offer with pre-printed numbers, letters or symbols,
- To be used to mark screw clamp, spring clamp, ADO System® and screw clamp pluggable (side marking) terminal blocks from the SNA and Solution series.

Main technical data

Material	Flammability
Polyamide	V2

Ordering details

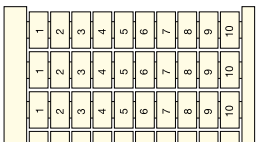

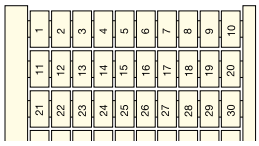

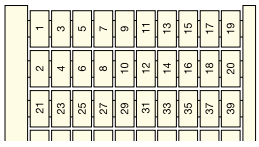

Description	Color	Type	Part Number	Pkg card	Weight (1 card) g
Card with 100 markers, ascending order repeated 10 times					
0->9 (x10)	White ☐	RC510	1SNA231040R0600	5	5.50
1->10 (x10)	White ☐	RC510	1SNA231041R2300	5	5.50
11->20 (x10)	White ☐	RC510	1SNA231042R2400	5	5.50
21->30 (x10)	White ☐	RC510	1SNA231043R2500	5	5.50
31->40 (x10)	White ☐	RC510	1SNA231044R2600	5	5.50
41->50 (x10)	White ☐	RC510	1SNA231045R2700	5	5.50
51->60 (x10)	White ☐	RC510	1SNA231046R2000	5	5.50
61->70 (x10)	White ☐	RC510	1SNA231047R2100	5	5.50
71->80 (x10)	White ☐	RC510	1SNA231048R0200	5	5.50
81->90 (x10)	White ☐	RC510	1SNA231049R0300	5	5.50
91->100 (x10)	White ☐	RC510	1SNA231050R0000	5	5.50
101->110 (x10)	White ☐	RC510	1SNA231051R2500	5	5.50
111->120 (x10)	White ☐	RC510	1SNA231052R2600	5	5.50
121->130 (x10)	White ☐	RC510	1SNA231053R2700	5	5.50
131->140 (x10)	White ☐	RC510	1SNA231054R2000	5	5.50
141->150 (x10)	White ☐	RC510	1SNA231055R2100	5	5.50
151->160 (x10)	White ☐	RC510	1SNA231056R2200	5	5.50
161->170 (x10)	White ☐	RC510	1SNA231057R2300	5	5.50
171->180 (x10)	White ☐	RC510	1SNA231058R0400	5	5.50
181->190 (x10)	White ☐	RC510	1SNA231059R0500	5	5.50
191->200 (x10)	White ☐	RC510	1SNA231072R2200	5	5.50
Card with 100 markers, ascending order					
1->100	White ☐	RC510	1SNA231060R0200	5	5.50
101->200	White ☐	RC510	1SNA231061R2700	5	5.50
201->300	White ☐	RC510	1SNA231062R2000	5	5.50
301->400	White ☐	RC510	1SNA231063R2100	5	5.50
401->500	White ☐	RC510	1SNA231064R2200	5	5.50
501->600	White ☐	RC510	1SNA231065R2300	5	5.50
601->700	White ☐	RC510	1SNA231066R2400	5	5.50
701->800	White ☐	RC510	1SNA231067R2500	5	5.50
801->900	White ☐	RC510	1SNA231068R0600	5	5.50
901->1000	White ☐	RC510	1SNA231069R0700	5	5.50
Card with 100 markers, alternate odd/even numbers for double deck terminal blocks					
1->20 alternate odd/even	White ☐	RC510	1SNA231133R1400	5	5.50
21->40 alternate odd/even	White ☐	RC510	1SNA231134R1500	5	5.50
41->60 alternate odd/even	White ☐	RC510	1SNA231135R1600	5	5.50
61->80 alternate odd/even	White ☐	RC510	1SNA231136R1700	5	5.50
81->100 alternate odd/even	White ☐	RC510	1SNA231137R1000	5	5.50

Continue on next page →

5 mm 0.197 in spacing - vertical mounting

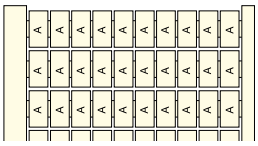

Ordering details

Description	Color	Type	Part Number		Pkg card	Weight (1 card) g
← Continuation of previous page						
Card with 100 markers, repeated identical letters						
A (x100)	White ☐	RC510	1SNA231180R2000		5	5.50
B (x100)	White ☐	RC510	1SNA231181R1500		5	5.50
C (x100)	White ☐	RC510	1SNA231182R1600		5	5.50
D (x100)	White ☐	RC510	1SNA231183R1700		5	5.50
E (x100)	White ☐	RC510	1SNA231184R1000		5	5.50
F (x100)	White ☐	RC510	1SNA231185R1100		5	5.50
G (x100)	White ☐	RC510	1SNA231186R1200		5	5.50
H (x100)	White ☐	RC510	1SNA231187R1300		5	5.50
I (x100)	White ☐	RC510	1SNA231188R2400		5	5.50
J (x100)	White ☐	RC510	1SNA231189R2500		5	5.50
K (x100)	White ☐	RC510	1SNA231190R2200		5	5.50
L (x100)	White ☐	RC510	1SNA231191R1700		5	5.50
M (x100)	White ☐	RC510	1SNA231192R1000		5	5.50
N (x100)	White ☐	RC510	1SNA231193R1100		5	5.50
O (x100)	White ☐	RC510	1SNA231194R1200		5	5.50
P (x100)	White ☐	RC510	1SNA231195R1300		5	5.50
Q (x100)	White ☐	RC510	1SNA231196R1400		5	5.50
R (x100)	White ☐	RC510	1SNA231197R1500		5	5.50
S (x100)	White ☐	RC510	1SNA231198R2600		5	5.50
T (x100)	White ☐	RC510	1SNA231199R2700		5	5.50
U (x100)	White ☐	RC510	1SNA231200R1400		5	5.50
V (x100)	White ☐	RC510	1SNA231201R0100		5	5.50
W (x100)	White ☐	RC510	1SNA231202R0200		5	5.50
X (x100)	White ☐	RC510	1SNA231203R0300		5	5.50
Y (x100)	White ☐	RC510	1SNA231204R0400		5	5.50
Z (x100)	White ☐	RC510	1SNA231205R0500		5	5.50

1SNC160141S0201

6 mm 0.236 in spacing - horizontal mounting

1SNC160191F0014

Horizontal terminal block assembly

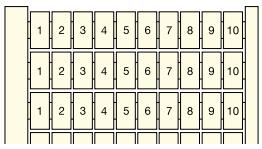

Description

- Save printing time with our large pre-printed card offer with pre-printed numbers, letters or symbols,
- To be used to mark screw clamp, spring loaded screw clamp, spring clamp, distribution and ADO System® terminal blocks, and Miniblocks (MS..), from the SNA and Solution series.

Main technical data

Material	Flammability
Polyamide	V2

Ordering details

Description	Color	Type	Part Number	Pkg card	Weight (1 card) g
Card with 100 markers, ascending order repeated 10 times					
0->9 (x10)	White	RC610	1SNA233001R2600	5	6.80
1->10 (x10)	White	RC610	1SNA233002R2700	5	6.80
11->20 (x10)	White	RC610	1SNA233003R2000	5	6.80
21->30 (x10)	White	RC610	1SNA233004R2100	5	6.80
31->40 (x10)	White	RC610	1SNA233005R2200	5	6.80
41->50 (x10)	White	RC610	1SNA233006R2300	5	6.80
51->60 (x10)	White	RC610	1SNA233007R2400	5	6.80
61->70 (x10)	White	RC610	1SNA233008R0500	5	6.80
71->80 (x10)	White	RC610	1SNA233009R0600	5	6.80
81->90 (x10)	White	RC610	1SNA233010R2200	5	6.80
91->100 (x10)	White	RC610	1SNA233011R1700	5	6.80
101->110 (x10)	White	RC610	1SNA233012R1000	5	6.80
111->120 (x10)	White	RC610	1SNA233013R1100	5	6.80
121->130 (x10)	White	RC610	1SNA233014R1200	5	6.80
131->140 (x10)	White	RC610	1SNA233015R1300	5	6.80
141->150 (x10)	White	RC610	1SNA233016R1400	5	6.80
151->160 (x10)	White	RC610	1SNA233017R1500	5	6.80
161->170 (x10)	White	RC610	1SNA233018R2600	5	6.80
171->180 (x10)	White	RC610	1SNA233019R2700	5	6.80
181->190 (x10)	White	RC610	1SNA233020R2400	5	6.80
191->200 (x10)	White	RC610	1SNA233021R1100	5	6.80
201->210 (x10)	White	RC610	1SNA233022R1200	5	6.80
211->220 (x10)	White	RC610	1SNA233023R1300	5	6.80
221->230 (x10)	White	RC610	1SNA233024R1400	5	6.80
231->240 (x10)	White	RC610	1SNA233025R1500	5	6.80
241->250 (x10)	White	RC610	1SNA233026R1600	5	6.80
251->260 (x10)	White	RC610	1SNA233027R1700	5	6.80
261->270 (x10)	White	RC610	1SNA233028R2000	5	6.80
271->280 (x10)	White	RC610	1SNA233029R2100	5	6.80
281->290 (x10)	White	RC610	1SNA233090R2300	5	6.80
291->300 (x10)	White	RC610	1SNA233091R1000	5	6.80
301->310 (x10)	White	RC610	1SNA233092R1100	5	6.80
311->320 (x10)	White	RC610	1SNA233093R1200	5	6.80
321->330 (x10)	White	RC610	1SNA233094R1300	5	6.80
331->340 (x10)	White	RC610	1SNA233095R1400	5	6.80
341->350 (x10)	White	RC610	1SNA233096R1500	5	6.80
351->360 (x10)	White	RC610	1SNA233097R1600	5	6.80
361->370 (x10)	White	RC610	1SNA233098R2700	5	6.80
371->380 (x10)	White	RC610	1SNA233099R2000	5	6.80
381->390 (x10)	White	RC610	1SNA233100R0200	5	6.80
391->400 (x10)	White	RC610	1SNA233101R2700	5	6.80
401->410 (x10)	White	RC610	1SNA233102R2000	5	6.80
411->420 (x10)	White	RC610	1SNA233103R2100	5	6.80
421->430 (x10)	White	RC610	1SNA233104R2200	5	6.80
431->440 (x10)	White	RC610	1SNA233105R2300	5	6.80
441->450 (x10)	White	RC610	1SNA233106R2400	5	6.80
451->460 (x10)	White	RC610	1SNA233107R2500	5	6.80
461->470 (x10)	White	RC610	1SNA233108R0600	5	6.80
471->480 (x10)	White	RC610	1SNA233109R0700	5	6.80
481->490 (x10)	White	RC610	1SNA233110R2300	5	6.80
491->500 (x10)	White	RC610	1SNA233120R2500	5	6.80

1SNC160142S0201

Continue on next page →

6 mm 0.236 in spacing - horizontal mounting

Ordering details

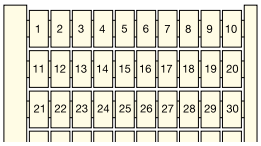

Description	Color	Type	Part Number		Pkg card	Weight (1 card) g
← Continuation of previous page						
Card with 100 markers, ascending order						
1->100	White ☐	RC610	1SNA233030R2600		5	6.80
101->200	White ☐	RC610	1SNA233031R1300		5	6.80
201->300	White ☐	RC610	1SNA233032R1400		5	6.80
301->400	White ☐	RC610	1SNA233033R1500		5	6.80
401->500	White ☐	RC610	1SNA233034R1600		5	6.80
501->600	White ☐	RC610	1SNA233035R1700		5	6.80
601->700	White ☐	RC610	1SNA233036R1000		5	6.80
701->800	White ☐	RC610	1SNA233074R2600		5	6.80
801->900	White ☐	RC610	1SNA233075R2700		5	6.80
901->1000	White ☐	RC610	1SNA233076R2000		5	6.80

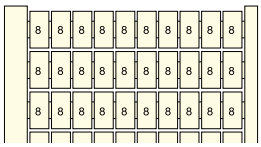

Card with 100 markers, repeated identical numbers						
0 (x100)	White ☐	RC610	1SNA233201R0300		5	6.80
1 (x100)	White ☐	RC610	1SNA233202R0400		5	6.80
2 (x100)	White ☐	RC610	1SNA233203R0500		5	6.80
3 (x100)	White ☐	RC610	1SNA233204R0600		5	6.80
4 (x100)	White ☐	RC610	1SNA233205R0700		5	6.80
5 (x100)	White ☐	RC610	1SNA233206R0000		5	6.80
6 (x100) / 9 (x100)	White ☐	RC610	1SNA233207R0100		5	6.80
7 (x100)	White ☐	RC610	1SNA233208R1200		5	6.80
8 (x100)	White ☐	RC610	1SNA233209R1300		5	6.80
10 (x100)	White ☐	RC610	1SNA233211R2400		5	6.80
11 (x100)	White ☐	RC610	1SNA233212R2500		5	6.80
12 (x100)	White ☐	RC610	1SNA233213R2600		5	6.80
13 (x100)	White ☐	RC610	1SNA233214R2700		5	6.80
14 (x100)	White ☐	RC610	1SNA233215R2000		5	6.80
15 (x100)	White ☐	RC610	1SNA233216R2100		5	6.80
16 (x100)	White ☐	RC610	1SNA233217R2200		5	6.80
17 (x100)	White ☐	RC610	1SNA233218R0300		5	6.80
18 (x100)	White ☐	RC610	1SNA233219R0400		5	6.80
19 (x100)	White ☐	RC610	1SNA233220R0100		5	6.80
20 (x100)	White ☐	RC610	1SNA233221R2600		5	6.80

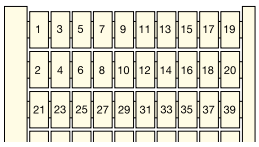

Card with 100 markers, alternate odd/even numbers for double deck terminal blocks						
1->20 alternate odd/even	White ☐	RC610	1SNA233133R1600		5	6.80
21->40 alternate odd/even	White ☐	RC610	1SNA233134R1700		5	6.80
41->60 alternate odd/even	White ☐	RC610	1SNA233135R1000		5	6.80
61->80 alternate odd/even	White ☐	RC610	1SNA233136R1100		5	6.80
81->100 alternate odd/even	White ☐	RC610	1SNA233137R1200		5	6.80

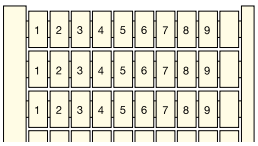

Card with 100 markers, ascending order repeated 10 times						
1->9+blank (x10)	White ☐	RC610	1SNA233142R2700		5	6.80

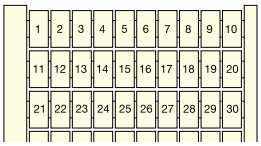

Card with 100 markers, ascending order repeated twice (from 1 to 50)						
1->50 (x2)	White ☐	RC610	1SNA233141R2600		5	6.80

Continue on next page →

1SNC160142S0201

6 mm 0.236 in spacing - horizontal mounting

Ordering details

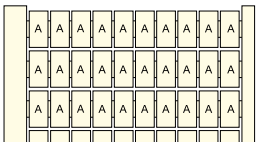

Description	Color	Type	Part Number		Pkg card	Weight (1 card) g
← Continuation of previous page						
Card with 100 markers, repeated identical letters						
A (x100)	White ☐	RC610	1SNA233150R0300		5	6.80
B (x100)	White ☐	RC610	1SNA233151R2000		5	6.80
C (x100)	White ☐	RC610	1SNA233152R2100		5	6.80
D (x100)	White ☐	RC610	1SNA233153R2200		5	6.80
E (x100)	White ☐	RC610	1SNA233154R2300		5	6.80
F (x100)	White ☐	RC610	1SNA233155R2400		5	6.80
G (x100)	White ☐	RC610	1SNA233156R2500		5	6.80
H (x100)	White ☐	RC610	1SNA233157R2600		5	6.80
I (x100)	White ☐	RC610	1SNA233158R0700		5	6.80
J (x100)	White ☐	RC610	1SNA233159R0000		5	6.80
K (x100)	White ☐	RC610	1SNA233160R0500		5	6.80
L (x100)	White ☐	RC610	1SNA233161R2200		5	6.80
M (x100)	White ☐	RC610	1SNA233162R2300		5	6.80
N (x100)	White ☐	RC610	1SNA233163R2400		5	6.80
O (x100)	White ☐	RC610	1SNA233164R2500		5	6.80
P (x100)	White ☐	RC610	1SNA233165R2600		5	6.80
Q (x100)	White ☐	RC610	1SNA233166R2700		5	6.80
R (x100)	White ☐	RC610	1SNA233167R2000		5	6.80
S (x100)	White ☐	RC610	1SNA233168R0100		5	6.80
T (x100)	White ☐	RC610	1SNA233169R0200		5	6.80
U (x100)	White ☐	RC610	1SNA233170R0700		5	6.80
V (x100)	White ☐	RC610	1SNA233171R2400		5	6.80
W (x100)	White ☐	RC610	1SNA233172R2500		5	6.80
X (x100)	White ☐	RC610	1SNA233173R2600		5	6.80
Y (x100)	White ☐	RC610	1SNA233174R2700		5	6.80
Z (x100)	White ☐	RC610	1SNA233175R2000		5	6.80

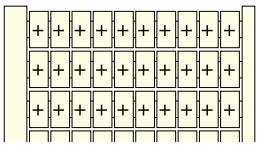

Card with 100 markers, repeated identical symbols						
+ (x100)	White ☐	RC610	1SNA233111R1000		5	6.80
- (x100)	White ☐	RC610	1SNA233112R1100		5	6.80
= (x100)	White ☐	RC610	1SNA233113R1200		5	6.80
~ (x100)	White ☐	RC610	1SNA233114R1300		5	6.80
⏚ (x100)	White ☐	RC610	1SNA233115R1400		5	6.80

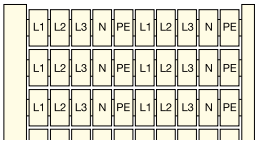

Card with 100 markers, 5 different symbols repeated 20 times						
L1-L2-L3-N-PE (x20)	White ☐	RC610	1SNA233131R1400		5	6.80

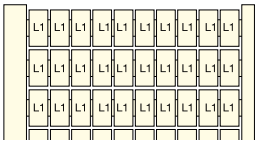

Card with 100 markers, repeated identical symbols						
L1 (x100)	White ☐	RC610	1SNA233116R1500		5	6.80
L2 (x100)	White ☐	RC610	1SNA233117R1600		5	6.80
L3 (x100)	White ☐	RC610	1SNA233118R2700		5	6.80
PE (x100)	White ☐	RC610	1SNA233119R2000		5	6.80

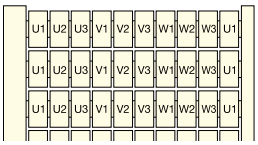

Card with 100 markers, 9 different symbols repeated 10 times						
U1-U2-U3-V1-V2-V3-W1-W2-W3 (x10) + U1 (x10)	White ☐	RC610	1SNA233132R1500		5	6.80

1SNC160142S0201

6 mm 0.236 in spacing - vertical mounting

Vertical terminal block assembly

Description

- Save printing time with our large pre-printed card offer with pre-printed numbers, letters or symbols,
- To be used to mark screw clamp, spring loaded screw clamp, spring clamp, distribution and ADO System® terminal blocks, and Miniblocks (MS..), from the SNA and Solution series.

Main technical data

Material	Flammability
Polyamide	V2

Ordering details

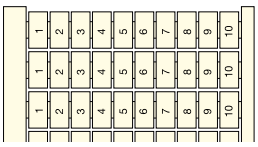

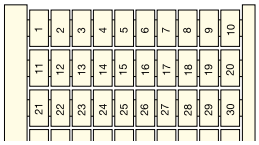

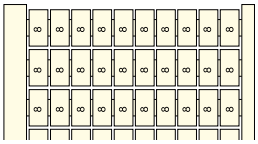

Description	Color	Type	Part Number	Pkg card	Weight (1 card) g
Card with 100 markers, ascending order repeated 10 times					
0->9 (x10)	White	RC610	1SNA233040R0000	5	6.80
1->10 (x10)	White	RC610	1SNA233041R2500	5	6.80
11->20 (x10)	White	RC610	1SNA233042R2600	5	6.80
21->30 (x10)	White	RC610	1SNA233043R2700	5	6.80
31->40 (x10)	White	RC610	1SNA233044R2000	5	6.80
41->50 (x10)	White	RC610	1SNA233045R2100	5	6.80
51->60 (x10)	White	RC610	1SNA233046R2200	5	6.80
61->70 (x10)	White	RC610	1SNA233047R2300	5	6.80
71->80 (x10)	White	RC610	1SNA233048R0400	5	6.80
81->90 (x10)	White	RC610	1SNA233049R0500	5	6.80
91->100 (x10)	White	RC610	1SNA233050R0200	5	6.80
101->110 (x10)	White	RC610	1SNA233051R2700	5	6.80
111->120 (x10)	White	RC610	1SNA233080R2100	5	6.80
121->130 (x10)	White	RC610	1SNA233081R1600	5	6.80
131->140 (x10)	White	RC610	1SNA233082R1700	5	6.80
141->150 (x10)	White	RC610	1SNA233083R1000	5	6.80
151->160 (x10)	White	RC610	1SNA233084R1100	5	6.80
161->170 (x10)	White	RC610	1SNA233085R1200	5	6.80
171->180 (x10)	White	RC610	1SNA233086R1300	5	6.80
181->190 (x10)	White	RC610	1SNA233087R1400	5	6.80
191->200 (x10)	White	RC610	1SNA233088R2500	5	6.80
Card with 100 markers, ascending order					
1->100	White	RC610	1SNA233060R0400	5	6.80
101->200	White	RC610	1SNA233061R2100	5	6.80
201->300	White	RC610	1SNA233062R2200	5	6.80
301->400	White	RC610	1SNA233063R2300	5	6.80
401->500	White	RC610	1SNA233064R2400	5	6.80
501->600	White	RC610	1SNA233065R2500	5	6.80
601->700	White	RC610	1SNA233066R2600	5	6.80
701->800	White	RC610	1SNA233067R2700	5	6.80
801->900	White	RC610	1SNA233068R0000	5	6.80
901->1000	White	RC610	1SNA233069R0100	5	6.80
Card with 100 markers, repeated identical numbers					
0 (x100)	White	RC610	1SNA233240R1500	5	6.80
1 (x100)	White	RC610	1SNA233241R0200	5	6.80
2 (x100)	White	RC610	1SNA233242R0300	5	6.80
3 (x100)	White	RC610	1SNA233243R0400	5	6.80
4 (x100)	White	RC610	1SNA233244R0500	5	6.80
5 (x100)	White	RC610	1SNA233245R0600	5	6.80
6 (x100) / 9 (x100)	White	RC610	1SNA233246R0700	5	6.80
7 (x100)	White	RC610	1SNA233247R0000	5	6.80
8 (x100)	White	RC610	1SNA233248R1100	5	6.80
10 (x100)	White	RC610	1SNA233250R1700	5	6.80
11 (x100)	White	RC610	1SNA233251R0400	5	6.80
12 (x100)	White	RC610	1SNA233252R0500	5	6.80
13 (x100)	White	RC610	1SNA233253R0600	5	6.80
14 (x100)	White	RC610	1SNA233254R0700	5	6.80
15 (x100)	White	RC610	1SNA233255R0000	5	6.80
16 (x100)	White	RC610	1SNA233256R0100	5	6.80
17 (x100)	White	RC610	1SNA233257R0200	5	6.80
18 (x100)	White	RC610	1SNA233258R1300	5	6.80
19 (x100)	White	RC610	1SNA233259R1400	5	6.80
20 (x100)	White	RC610	1SNA233260R1100	5	6.80

Continue on next page →

1SNC160143S0201

6 mm 0.236 in spacing - vertical mounting

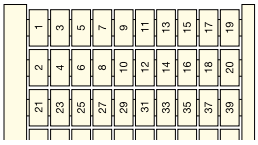

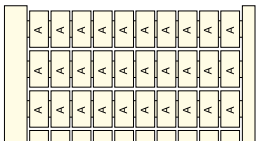

Ordering details

Description	Color	Type	Part Number		Pkg card	Weight (1 card) g
← Continuation of previous page						
Card with 100 markers, alternate odd/even numbers for double deck terminal blocks						
1->20 (x100)	White	RC610	1SNA233143R2000		5	6.80
21->40 (x100)	White	RC610	1SNA233144R2100		5	6.80
41->60 (x100)	White	RC610	1SNA233145R2200		5	6.80
61->80 (x100)	White	RC610	1SNA233146R2300		5	6.80
81->100 (x100)	White	RC610	1SNA233147R2400		5	6.80
Card with 100 markers, repeated identical letters						
A (x100)	White	RC610	1SNA233180R2200		5	6.80
B (x100)	White	RC610	1SNA233181R1700		5	6.80
C (x100)	White	RC610	1SNA233182R1000		5	6.80
D (x100)	White	RC610	1SNA233183R1100		5	6.80
E (x100)	White	RC610	1SNA233184R1200		5	6.80
F (x100)	White	RC610	1SNA233185R1300		5	6.80
G (x100)	White	RC610	1SNA233186R1400		5	6.80
H (x100)	White	RC610	1SNA233187R1500		5	6.80
I (x100)	White	RC610	1SNA233188R2600		5	6.80
J (x100)	White	RC610	1SNA233189R2700		5	6.80
K (x100)	White	RC610	1SNA233190R2400		5	6.80
L (x100)	White	RC610	1SNA233191R1100		5	6.80
M (x100)	White	RC610	1SNA233192R1200		5	6.80
N (x100)	White	RC610	1SNA233193R1300		5	6.80
O (x100)	White	RC610	1SNA233194R1400		5	6.80
P (x100)	White	RC610	1SNA233195R1500		5	6.80
Q (x100)	White	RC610	1SNA233196R1600		5	6.80
R (x100)	White	RC610	1SNA233197R1700		5	6.80
S (x100)	White	RC610	1SNA233198R2000		5	6.80
T (x100)	White	RC610	1SNA233199R2100		5	6.80
U (x100)	White	RC610	1SNA233200R1600		5	6.80
V (x100)	White	RC610	1SNA233235R2400		5	6.80
W (x100)	White	RC610	1SNA233236R2500		5	6.80
X (x100)	White	RC610	1SNA233237R2600		5	6.80
Y (x100)	White	RC610	1SNA233238R0700		5	6.80
Z (x100)	White	RC610	1SNA233239R0000		5	6.80
Card with 100 markers, repeated identical symbols						
+24V (x100)	White	RC610	1SNA233124R1500		5	6.80
+48V (x100)	White	RC610	1SNA233125R1600		5	6.80
-24V (x100)	White	RC610	1SNA233126R1700		5	6.80
-48V (x100)	White	RC610	1SNA233127R1000		5	6.80

1SNC160143S0201

8 mm 0.315 in spacing - horizontal mounting

Horizontal terminal block assembly

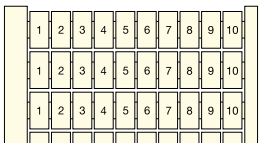

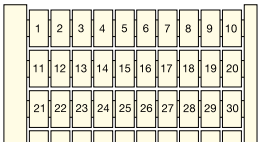

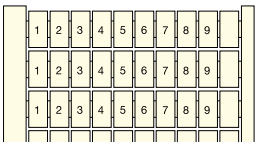

Description

- Save printing time with our large pre-printed card offer with pre-printed numbers, letters or symbols,
- To be used to mark screw clamp, spring loaded screw clamp, spring clamp, distribution, power and ADO System® terminal blocks, and screw clamp Miniblocks, from the SNA and Solution series.

Main technical data

Material	Flammability
Polyamide	V2

Ordering details

Description	Color	Type	Part Number	Pkg card	Weight (1 card) g
Card with 100 markers, ascending order repeated 10 times					
0->9 (x10)	White ☐	RC810	1SNA234001R2700	5	7.20
1->10 (x10)	White ☐	RC810	1SNA234002R2000	5	7.20
11->20 (x10)	White ☐	RC810	1SNA234003R2100	5	7.20
21->30 (x10)	White ☐	RC810	1SNA234004R2200	5	7.20
31->40 (x10)	White ☐	RC810	1SNA234005R2300	5	7.20
41->50 (x10)	White ☐	RC810	1SNA234006R2400	5	7.20
51->60 (x10)	White ☐	RC810	1SNA234007R2500	5	7.20
61->70 (x10)	White ☐	RC810	1SNA234008R0600	5	7.20
71->80 (x10)	White ☐	RC810	1SNA234009R0700	5	7.20
81->90 (x10)	White ☐	RC810	1SNA234010R2300	5	7.20
91->100 (x10)	White ☐	RC810	1SNA234011R1000	5	7.20
101->110 (x10)	White ☐	RC810	1SNA234012R1100	5	7.20
111->120 (x10)	White ☐	RC810	1SNA234013R1200	5	7.20
121->130 (x10)	White ☐	RC810	1SNA234014R1300	5	7.20
131->140 (x10)	White ☐	RC810	1SNA234015R1400	5	7.20
141->150 (x10)	White ☐	RC810	1SNA234016R1500	5	7.20
151->160 (x10)	White ☐	RC810	1SNA234017R1600	5	7.20
161->170 (x10)	White ☐	RC810	1SNA234018R2700	5	7.20
171->180 (x10)	White ☐	RC810	1SNA234019R2000	5	7.20
181->190 (x10)	White ☐	RC810	1SNA234020R2500	5	7.20
191->200 (x10)	White ☐	RC810	1SNA234021R1200	5	7.20
Card with 100 markers, ascending order					
1->100	White ☐	RC810	1SNA234030R2700	5	7.20
101->200	White ☐	RC810	1SNA234031R1400	5	7.20
201->300	White ☐	RC810	1SNA234032R1500	5	7.20
301->400	White ☐	RC810	1SNA234033R1600	5	7.20
401->500	White ☐	RC810	1SNA234034R1700	5	7.20
501->600	White ☐	RC810	1SNA234035R1000	5	7.20
601->700	White ☐	RC810	1SNA234036R1100	5	7.20
701->800	White ☐	RC810	1SNA234037R1200	5	7.20
801->900	White ☐	RC810	1SNA234038R2300	5	7.20
901->1000	White ☐	RC810	1SNA234039R2400	5	7.20
Card with 100 markers, ascending order repeated 10 times					
1->9+blank (x10)	White ☐	RC810	1SNA234130R2000	5	7.20

Continue on next page →

1SNC160144S0201

8 mm 0.315 in spacing - horizontal mounting

Description

- Save printing time with our large pre-printed card offer with pre-printed numbers, letters or symbols,
- To be used to mark screw clamp, spring loaded screw clamp, spring clamp, distribution, power and ADO System® terminal blocks, and screw clamp Miniblocks, from the SNA and Solution series.

Main technical data

Material	Flammability
Polyamide	V2

Ordering details

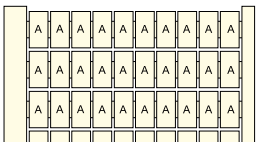

Description	Color	Type	Part Number	Pkg card	Weight (1 card) g
← Continuation of previous page					
Card with 100 markers, repeated identical letters					
A (x100)	White	RC810	1SNA234150R0400	5	7.20
B (x100)	White	RC810	1SNA234151R2100	5	7.20
C (x100)	White	RC810	1SNA234152R2200	5	7.20
D (x100)	White	RC810	1SNA234153R2300	5	7.20
E (x100)	White	RC810	1SNA234154R2400	5	7.20
F (x100)	White	RC810	1SNA234155R2500	5	7.20
G (x100)	White	RC810	1SNA234156R2600	5	7.20
H (x100)	White	RC810	1SNA234157R2700	5	7.20
I (x100)	White	RC810	1SNA234158R0000	5	7.20
J (x100)	White	RC810	1SNA234159R0100	5	7.20
K (x100)	White	RC810	1SNA234160R0600	5	7.20
L (x100)	White	RC810	1SNA234161R2300	5	7.20
M (x100)	White	RC810	1SNA234162R2400	5	7.20
N (x100)	White	RC810	1SNA234163R2500	5	7.20
O (x100)	White	RC810	1SNA234164R2600	5	7.20
P (x100)	White	RC810	1SNA234165R2700	5	7.20
Q (x100)	White	RC810	1SNA234166R2000	5	7.20
R (x100)	White	RC810	1SNA234167R2100	5	7.20
S (x100)	White	RC810	1SNA234168R0200	5	7.20
T (x100)	White	RC810	1SNA234169R0300	5	7.20
U (x100)	White	RC810	1SNA234170R0000	5	7.20
V (x100)	White	RC810	1SNA234171R2500	5	7.20
W (x100)	White	RC810	1SNA234172R2600	5	7.20
X (x100)	White	RC810	1SNA234173R2700	5	7.20
Y (x100)	White	RC810	1SNA234174R2000	5	7.20
Z (x100)	White	RC810	1SNA234175R2100	5	7.20

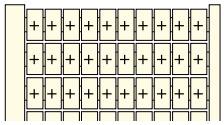

Card with 100 markers, repeated identical symbols					
+ (x100)	White	RC810	1SNA234111R1100	5	7.20
- (x100)	White	RC810	1SNA234112R1200	5	7.20
= (x100)	White	RC810	1SNA234113R1300	5	7.20
~ (x100)	White	RC810	1SNA234114R1400	5	7.20
⏚ (x100)	White	RC810	1SNA234115R1500	5	7.20

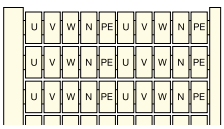

Card with 100 markers, 5 different symbols repeated 20 times					
U-V-W-N-PE (x20)	White	RC810	1SNA234116R1600	5	7.20

1SNC160144S0201

8 mm 0.315 in spacing - vertical mounting

1SNC160190R0014

Vertical terminal block assembly

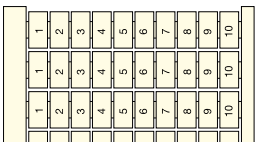

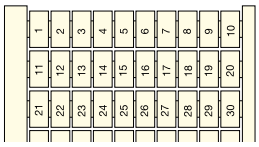

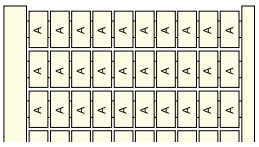

Description

- Save printing time with our large pre-printed card offer with pre-printed numbers, letters or symbols,
- To be used to mark screw clamp, spring loaded screw clamp, spring clamp, distribution, power and ADO System® terminal blocks, and screw clamp Miniblocks, from the SNA and Solution series.

Main technical data

Material	Flammability
Polyamide	V2

Ordering details

Description	Color	Type	Part Number	Pkg card	Weight (1 card) g
Card with 100 markers, ascending order repeated 10 times					
0->9 (x10)	White	RC810	1SNA234040R0100	5	7.20
1->10 (x10)	White	RC810	1SNA234041R2600	5	7.20
11->20 (x10)	White	RC810	1SNA234042R2700	5	7.20
21->30 (x10)	White	RC810	1SNA234043R2000	5	7.20
31->40 (x10)	White	RC810	1SNA234044R2100	5	7.20
41->50 (x10)	White	RC810	1SNA234045R2200	5	7.20
51->60 (x10)	White	RC810	1SNA234046R2300	5	7.20
61->70 (x10)	White	RC810	1SNA234047R2400	5	7.20
71->80 (x10)	White	RC810	1SNA234048R0500	5	7.20
81->90 (x10)	White	RC810	1SNA234049R0600	5	7.20
91->100 (x10)	White	RC810	1SNA234050R0300	5	7.20
101->110 (x10)	White	RC810	1SNA234051R2000	5	7.20
111->120 (x10)	White	RC810	1SNA234052R2100	5	7.20
121->130 (x10)	White	RC810	1SNA234053R2200	5	7.20
131->140 (x10)	White	RC810	1SNA234054R2300	5	7.20
141->150 (x10)	White	RC810	1SNA234055R2400	5	7.20
151->160 (x10)	White	RC810	1SNA234056R2500	5	7.20
161->170 (x10)	White	RC810	1SNA234057R2600	5	7.20
171->180 (x10)	White	RC810	1SNA234058R0700	5	7.20
181->190 (x10)	White	RC810	1SNA234059R0000	5	7.20
191->200 (x10)	White	RC810	1SNA234072R2500	5	7.20
Card with 100 markers, ascending order					
1->100	White	RC810	1SNA234060R0500	5	7.20
101->200	White	RC810	1SNA234061R2200	5	7.20
201->300	White	RC810	1SNA234062R2300	5	7.20
301->400	White	RC810	1SNA234063R2400	5	7.20
401->500	White	RC810	1SNA234064R2500	5	7.20
501->600	White	RC810	1SNA234065R2600	5	7.20
601->700	White	RC810	1SNA234066R2700	5	7.20
701->800	White	RC810	1SNA234067R2000	5	7.20
801->900	White	RC810	1SNA234068R0100	5	7.20
901->1000	White	RC810	1SNA234069R0200	5	7.20
Card with 100 markers, repeated identical letters					
A (x100)	White	RC810	1SNA234180R2300	5	7.20
B (x100)	White	RC810	1SNA234181R1000	5	7.20
C (x100)	White	RC810	1SNA234182R1100	5	7.20
D (x100)	White	RC810	1SNA234183R1200	5	7.20
E (x100)	White	RC810	1SNA234184R1300	5	7.20
F (x100)	White	RC810	1SNA234185R1400	5	7.20
G (x100)	White	RC810	1SNA234186R1500	5	7.20
H (x100)	White	RC810	1SNA234187R1600	5	7.20
I (x100)	White	RC810	1SNA234188R2700	5	7.20
J (x100)	White	RC810	1SNA234189R2000	5	7.20
K (x100)	White	RC810	1SNA234190R2500	5	7.20
L (x100)	White	RC810	1SNA234191R1200	5	7.20
M (x100)	White	RC810	1SNA234192R1300	5	7.20
N (x100)	White	RC810	1SNA234193R1400	5	7.20
O (x100)	White	RC810	1SNA234194R1500	5	7.20
P (x100)	White	RC810	1SNA234195R1600	5	7.20
Q (x100)	White	RC810	1SNA234196R1700	5	7.20
R (x100)	White	RC810	1SNA234197R1000	5	7.20
S (x100)	White	RC810	1SNA234198R2100	5	7.20
T (x100)	White	RC810	1SNA234199R2200	5	7.20
U (x100)	White	RC810	1SNA234200R1700	5	7.20
V (x100)	White	RC810	1SNA234201R0400	5	7.20
W (x100)	White	RC810	1SNA234202R0500	5	7.20
X (x100)	White	RC810	1SNA234203R0600	5	7.20
Y (x100)	White	RC810	1SNA234204R0700	5	7.20
Z (x100)	White	RC810	1SNA234205R0000	5	7.20

1SNC160145S0201

10 mm 0.394 in spacing - horizontal mounting

1SNC160191R0014

Horizontal terminal block assembly

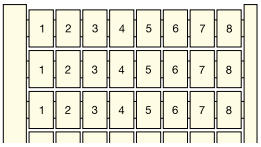

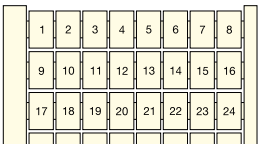

Description

- Save printing time with our large pre-printed cards offer with pre-printed numbers, letters or symbols,
- To be used to mark screw clamp, spring loaded screw clamp, spring clamp and distribution terminal blocks from the SNA and Solution series.

Main technical data

Material	Flammability
Polyamide	V2

Ordering details

Description	Color	Type	Part Number	Pkg card	Weight (1 card) g
Card with 80 markers, ascending order repeated 10 times					
0->7 (x10)	White ☐	RC1010	1SNA238001R0300	5	8.00
1->8 (x10)	White ☐	RC1010	1SNA238002R0400	5	8.00
9->16 (x10)	White ☐	RC1010	1SNA238003R0500	5	8.00
17->24 (x10)	White ☐	RC1010	1SNA238004R0600	5	8.00
25->32 (x10)	White ☐	RC1010	1SNA238005R0700	5	8.00
33->40 (x10)	White ☐	RC1010	1SNA238006R0000	5	8.00
41->48 (x10)	White ☐	RC1010	1SNA238007R0100	5	8.00
49->56 (x10)	White ☐	RC1010	1SNA238008R1200	5	8.00
57->64 (x10)	White ☐	RC1010	1SNA238009R1300	5	8.00
65->72 (x10)	White ☐	RC1010	1SNA238010R0700	5	8.00
73->80 (x10)	White ☐	RC1010	1SNA238011R2400	5	8.00
81->88 (x10)	White ☐	RC1010	1SNA238012R2500	5	8.00
89->96 (x10)	White ☐	RC1010	1SNA238013R2600	5	8.00
97->104 (x10)	White ☐	RC1010	1SNA238014R2700	5	8.00
105->112 (x10)	White ☐	RC1010	1SNA238015R2000	5	8.00
113->120 (x10)	White ☐	RC1010	1SNA238016R2100	5	8.00
121->128 (x10)	White ☐	RC1010	1SNA238017R2200	5	8.00
129->136 (x10)	White ☐	RC1010	1SNA238018R0300	5	8.00
137->144 (x10)	White ☐	RC1010	1SNA238019R0400	5	8.00
145->152 (x10)	White ☐	RC1010	1SNA238020R0100	5	8.00
153->160 (x10)	White ☐	RC1010	1SNA238021R2600	5	8.00
161->168 (x10)	White ☐	RC1010	1SNA238022R2700	5	8.00
169->176 (x10)	White ☐	RC1010	1SNA238023R2000	5	8.00
177->184 (x10)	White ☐	RC1010	1SNA238024R2100	5	8.00
185->192 (x10)	White ☐	RC1010	1SNA238025R2200	5	8.00
193->200 (x10)	White ☐	RC1010	1SNA238026R2300	5	8.00
Card with 80 markers, ascending order					
1->80	White ☐	RC1010	1SNA238030R0300	5	8.00
81->160	White ☐	RC1010	1SNA238031R2000	5	8.00
161->240	White ☐	RC1010	1SNA238032R2100	5	8.00
241->320	White ☐	RC1010	1SNA238033R2200	5	8.00
321->400	White ☐	RC1010	1SNA238034R2300	5	8.00
401->480	White ☐	RC1010	1SNA238035R2400	5	8.00
481->560	White ☐	RC1010	1SNA238036R2500	5	8.00
561->640	White ☐	RC1010	1SNA238037R2600	5	8.00
641->720	White ☐	RC1010	1SNA238038R0700	5	8.00
721->800	White ☐	RC1010	1SNA238039R0000	5	8.00
801->880	White ☐	RC1010	1SNA238040R1500	5	8.00
881->960	White ☐	RC1010	1SNA238041R0200	5	8.00

1SNC160146S0201

10 mm 0.394 in spacing - vertical mounting

Vertical terminal block assembly

Description

- Save printing time with our large pre-printed cards offer with pre-printed numbers, letters or symbols,
- To be used to mark screw clamp, spring loaded screw clamp, spring clamp and distribution terminal blocks from the SNA and Solution series.

Main technical data

Material	Flammability
Polyamide	V2

Ordering details

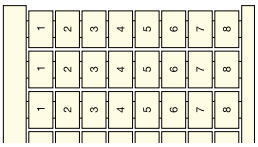

Description	Color	Type	Part Number	Pkg card	Weight (1 card) g
Card with 80 markers, ascending order repeated 10 times					
0->7 (x10)	White ☐	RC1010	1SNA238050R1700	5	8.00
1->8 (x10)	White ☐	RC1010	1SNA238051R0400	5	8.00
9->16 (x10)	White ☐	RC1010	1SNA238052R0500	5	8.00
17->24 (x10)	White ☐	RC1010	1SNA238053R0600	5	8.00
25->32 (x10)	White ☐	RC1010	1SNA238054R0700	5	8.00
33->40 (x10)	White ☐	RC1010	1SNA238055R0000	5	8.00
41->48 (x10)	White ☐	RC1010	1SNA238056R0100	5	8.00
49->56 (x10)	White ☐	RC1010	1SNA238057R0200	5	8.00
57->64 (x10)	White ☐	RC1010	1SNA238058R1300	5	8.00
65->72 (x10)	White ☐	RC1010	1SNA238059R1400	5	8.00
73->80 (x10)	White ☐	RC1010	1SNA238060R1100	5	8.00
81->88 (x10)	White ☐	RC1010	1SNA238061R0600	5	8.00
89->96 (x10)	White ☐	RC1010	1SNA238062R0700	5	8.00
97->104 (x10)	White ☐	RC1010	1SNA238063R0000	5	8.00
105->112 (x10)	White ☐	RC1010	1SNA238064R0100	5	8.00
113->120 (x10)	White ☐	RC1010	1SNA238065R0200	5	8.00
121->128 (x10)	White ☐	RC1010	1SNA238066R0300	5	8.00
129->136 (x10)	White ☐	RC1010	1SNA238067R0400	5	8.00
137->144 (x10)	White ☐	RC1010	1SNA238068R1500	5	8.00
145->152 (x10)	White ☐	RC1010	1SNA238069R1600	5	8.00
153->160 (x10)	White ☐	RC1010	1SNA238070R1300	5	8.00
161->168 (x10)	White ☐	RC1010	1SNA238071R0000	5	8.00
169->176 (x10)	White ☐	RC1010	1SNA238072R0100	5	8.00
177->184 (x10)	White ☐	RC1010	1SNA238073R0200	5	8.00
185->192 (x10)	White ☐	RC1010	1SNA238074R0300	5	8.00
193->200 (x10)	White ☐	RC1010	1SNA238075R0400	5	8.00

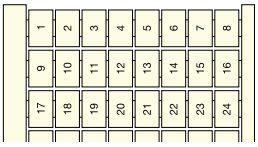

Card with 80 markers, ascending order					
1->80	White ☐	RC1010	1SNA238080R0600	5	8.00
81->160	White ☐	RC1010	1SNA238081R2300	5	8.00
161->240	White ☐	RC1010	1SNA238082R2400	5	8.00
241->320	White ☐	RC1010	1SNA238083R2500	5	8.00
321->400	White ☐	RC1010	1SNA238084R2600	5	8.00
401->480	White ☐	RC1010	1SNA238085R2700	5	8.00
481->560	White ☐	RC1010	1SNA238086R2000	5	8.00
561->640	White ☐	RC1010	1SNA238087R2100	5	8.00
641->720	White ☐	RC1010	1SNA238088R0200	5	8.00

1SNC160147S0201

5 mm 0.197 in spacing - horizontal mounting

1SNC160191R014

Horizontal terminal block assembly

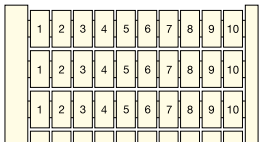

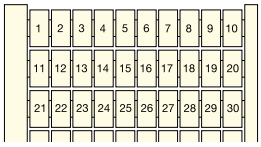

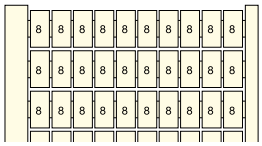

Description

- Save printing time with our large pre-printed card offer with pre-printed numbers, letters or symbols,
- To be used to mark screw clamp and spring clamp terminal blocks, and all Miniblocks, from the SNA and Solution series.

Main technical data

Material	Flammability
Polyamide	V2

Ordering details

Description	Color	Type	Part Number	Pkg card	Weight (1 card) g
Card with 100 markers, ascending order repeated 10 times					
0->9 (x10)	White ☐	RC55	1SNA230001R0700	5	2.70
1->10 (x10)	White ☐	RC55	1SNA230002R0000	5	2.70
11->20 (x10)	White ☐	RC55	1SNA230003R0100	5	2.70
21->30 (x10)	White ☐	RC55	1SNA230004R0200	5	2.70
31->40 (x10)	White ☐	RC55	1SNA230005R0300	5	2.70
41->50 (x10)	White ☐	RC55	1SNA230006R0400	5	2.70
51->60 (x10)	White ☐	RC55	1SNA230007R0500	5	2.70
61->70 (x10)	White ☐	RC55	1SNA230008R1600	5	2.70
71->80 (x10)	White ☐	RC55	1SNA230009R1700	5	2.70
81->90 (x10)	White ☐	RC55	1SNA230010R0300	5	2.70
91->100 (x10)	White ☐	RC55	1SNA230011R2000	5	2.70
101->110 (x10)	White ☐	RC55	1SNA230012R2100	5	2.70
111->120 (x10)	White ☐	RC55	1SNA230013R2200	5	2.70
121->130 (x10)	White ☐	RC55	1SNA230014R2300	5	2.70
131->140 (x10)	White ☐	RC55	1SNA230015R2400	5	2.70
141->150 (x10)	White ☐	RC55	1SNA230016R2500	5	2.70
151->160 (x10)	White ☐	RC55	1SNA230017R2600	5	2.70
161->170 (x10)	White ☐	RC55	1SNA230018R0700	5	2.70
171->180 (x10)	White ☐	RC55	1SNA230019R0000	5	2.70
181->190 (x10)	White ☐	RC55	1SNA230020R0500	5	2.70
191->200 (x10)	White ☐	RC55	1SNA230021R2200	5	2.70
Card with 100 markers, ascending order					
1->100	White ☐	RC55	1SNA230030R0700	5	2.70
101->200	White ☐	RC55	1SNA230031R2400	5	2.70
201->300	White ☐	RC55	1SNA230032R2500	5	2.70
301->400	White ☐	RC55	1SNA230033R2600	5	2.70
401->500	White ☐	RC55	1SNA230034R2700	5	2.70
501->600	White ☐	RC55	1SNA230035R2000	5	2.70
601->700	White ☐	RC55	1SNA230036R2100	5	2.70
701->800	White ☐	RC55	1SNA230037R2200	5	2.70
801->900	White ☐	RC55	1SNA230038R0300	5	2.70
901->1000	White ☐	RC55	1SNA230039R0400	5	2.70
Card with 100 markers, repeated identical numbers					
0 (x100)	White ☐	RC55	1SNA230240R2600	5	2.70
1 (x100)	White ☐	RC55	1SNA230241R1300	5	2.70
2 (x100)	White ☐	RC55	1SNA230242R1400	5	2.70
3 (x100)	White ☐	RC55	1SNA230243R1500	5	2.70
4 (x100)	White ☐	RC55	1SNA230244R1600	5	2.70
5 (x100)	White ☐	RC55	1SNA230245R1700	5	2.70
6 (x100) / 9 (x100)	White ☐	RC55	1SNA230246R1000	5	2.70
7 (x100)	White ☐	RC55	1SNA230247R1100	5	2.70
8 (x100)	White ☐	RC55	1SNA230248R2200	5	2.70
10 (x100)	White ☐	RC55	1SNA230250R2000	5	2.70
11 (x100)	White ☐	RC55	1SNA230251R1500	5	2.70
12 (x100)	White ☐	RC55	1SNA230252R1600	5	2.70
13 (x100)	White ☐	RC55	1SNA230253R1700	5	2.70
14 (x100)	White ☐	RC55	1SNA230254R1000	5	2.70
15 (x100)	White ☐	RC55	1SNA230255R1100	5	2.70
16 (x100)	White ☐	RC55	1SNA230256R1200	5	2.70
17 (x100)	White ☐	RC55	1SNA230257R1300	5	2.70
18 (x100)	White ☐	RC55	1SNA230258R2400	5	2.70
19 (x100)	White ☐	RC55	1SNA230259R2500	5	2.70
20 (x100)	White ☐	RC55	1SNA230260R2200	5	2.70

1SNC160148S0201

Continue on next page →

5 mm 0.197 in spacing - horizontal mounting

Ordering details

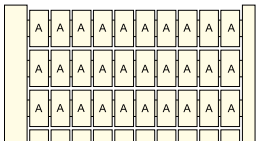

Description	Color	Type	Part Number		Pkg card	Weight (1 card) g
← Continuation of previous page						
Card with 100 markers, repeated identical letters						
A (x100)	White ☐	RC55	1SNA230150R1400		5	2.70
B (x100)	White ☐	RC55	1SNA230151R0100		5	2.70
C (x100)	White ☐	RC55	1SNA230152R0200		5	2.70
D (x100)	White ☐	RC55	1SNA230153R0300		5	2.70
E (x100)	White ☐	RC55	1SNA230154R0400		5	2.70
F (x100)	White ☐	RC55	1SNA230155R0500		5	2.70
G (x100)	White ☐	RC55	1SNA230156R0600		5	2.70
H (x100)	White ☐	RC55	1SNA230157R0700		5	2.70
I (x100)	White ☐	RC55	1SNA230158R1000		5	2.70
J (x100)	White ☐	RC55	1SNA230159R1100		5	2.70
K (x100)	White ☐	RC55	1SNA230160R1600		5	2.70
L (x100)	White ☐	RC55	1SNA230161R0300		5	2.70
M (x100)	White ☐	RC55	1SNA230162R0400		5	2.70
N (x100)	White ☐	RC55	1SNA230163R0500		5	2.70
O (x100)	White ☐	RC55	1SNA230164R0600		5	2.70
P (x100)	White ☐	RC55	1SNA230165R0700		5	2.70
Q (x100)	White ☐	RC55	1SNA230166R0000		5	2.70
R (x100)	White ☐	RC55	1SNA230167R0100		5	2.70
S (x100)	White ☐	RC55	1SNA230168R1200		5	2.70
T (x100)	White ☐	RC55	1SNA230169R1300		5	2.70
U (x100)	White ☐	RC55	1SNA230170R1000		5	2.70
V (x100)	White ☐	RC55	1SNA230171R0500		5	2.70
W (x100)	White ☐	RC55	1SNA230172R0600		5	2.70
X (x100)	White ☐	RC55	1SNA230173R0700		5	2.70
Y (x100)	White ☐	RC55	1SNA230174R0000		5	2.70
Z (x100)	White ☐	RC55	1SNA230175R0100		5	2.70

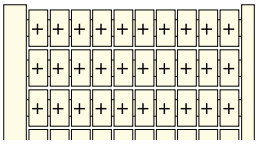

Card with 100 markers, repeated identical symbols						
+ (x100)	White ☐	RC55	1SNA230111R2100		5	2.70
- (x100)	White ☐	RC55	1SNA230112R2200		5	2.70
= (x100)	White ☐	RC55	1SNA230113R2300		5	2.70
~ (x100)	White ☐	RC55	1SNA230114R2400		5	2.70
⏚ (x100)	White ☐	RC55	1SNA230115R2500		5	2.70

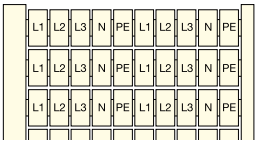

Card with 100 markers, 5 different symbols repeated 20 times						
L1-L2-L3-N-PE (x20)	White ☐	RC55	1SNA230131R2500		5	2.70

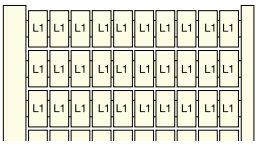

Card with 100 markers, repeated identical symbols						
L1 (x100)	White ☐	RC55	1SNA230116R2600		5	2.70
L2 (x100)	White ☐	RC55	1SNA230117R2700		5	2.70
L3 (x100)	White ☐	RC55	1SNA230118R0000		5	2.70
PE (x100)	White ☐	RC55	1SNA230119R0100		5	2.70

1SNC160148S0201

5 mm 0.197 in spacing - vertical mounting

1SNC160190R0014

Vertical terminal block assembly

Description

- Save printing time with our large pre-printed card offer with pre-printed numbers, letters or symbols,
- To be used to mark screw clamp and spring clamp terminal blocks, and all Miniblocks, from the SNA and Solution series.

Main technical data

Material	Flammability
Polyamide	V2

Ordering details

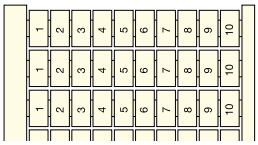

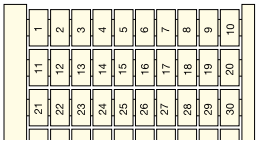

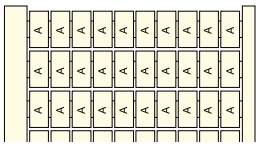

Description	Color	Type	Part Number	Pkg card	Weight (1 card) g
Card with 100 markers, ascending order repeated 10 times					
0->9 (x10)	White	RC55	1SNA230040R1100	5	2.70
1->10 (x10)	White	RC55	1SNA230041R0600	5	2.70
11->20 (x10)	White	RC55	1SNA230042R0700	5	2.70
21->30 (x10)	White	RC55	1SNA230043R0000	5	2.70
31->40 (x10)	White	RC55	1SNA230044R0100	5	2.70
41->50 (x10)	White	RC55	1SNA230045R0200	5	2.70
51->60 (x10)	White	RC55	1SNA230046R0300	5	2.70
61->70 (x10)	White	RC55	1SNA230047R0400	5	2.70
71->80 (x10)	White	RC55	1SNA230048R1500	5	2.70
81->90 (x10)	White	RC55	1SNA230049R1600	5	2.70
91->100 (x10)	White	RC55	1SNA230050R1300	5	2.70
101->110 (x10)	White	RC55	1SNA230051R0000	5	2.70
111->120 (x10)	White	RC55	1SNA230052R0100	5	2.70
121->130 (x10)	White	RC55	1SNA230053R0200	5	2.70
131->140 (x10)	White	RC55	1SNA230054R0300	5	2.70
141->150 (x10)	White	RC55	1SNA230055R0400	5	2.70
151->160 (x10)	White	RC55	1SNA230056R0500	5	2.70
161->170 (x10)	White	RC55	1SNA230057R0600	5	2.70
171->180 (x10)	White	RC55	1SNA230058R1700	5	2.70
181->190 (x10)	White	RC55	1SNA230059R1000	5	2.70
191->200 (x10)	White	RC55	1SNA230072R0500	5	2.70
Card with 100 markers, ascending order					
1->100	White	RC55	1SNA230060R1500	5	2.70
101->200	White	RC55	1SNA230061R0200	5	2.70
201->300	White	RC55	1SNA230062R0300	5	2.70
301->400	White	RC55	1SNA230063R0400	5	2.70
401->500	White	RC55	1SNA230064R0500	5	2.70
501->600	White	RC55	1SNA230065R0600	5	2.70
601->700	White	RC55	1SNA230066R0700	5	2.70
701->800	White	RC55	1SNA230067R0000	5	2.70
801->900	White	RC55	1SNA230068R1100	5	2.70
901->1000	White	RC55	1SNA230069R1200	5	2.70
Card with 100 markers, repeated identical letters					
A (x100)	White	RC55	1SNA230180R0300	5	2.70
B (x100)	White	RC55	1SNA230181R2000	5	2.70
C (x100)	White	RC55	1SNA230182R2100	5	2.70
D (x100)	White	RC55	1SNA230183R2200	5	2.70
E (x100)	White	RC55	1SNA230184R2300	5	2.70
F (x100)	White	RC55	1SNA230185R2400	5	2.70
G (x100)	White	RC55	1SNA230186R2500	5	2.70
H (x100)	White	RC55	1SNA230187R2600	5	2.70
I (x100)	White	RC55	1SNA230188R0700	5	2.70
J (x100)	White	RC55	1SNA230189R0000	5	2.70
K (x100)	White	RC55	1SNA230190R0500	5	2.70
L (x100)	White	RC55	1SNA230191R2200	5	2.70
M (x100)	White	RC55	1SNA230192R2300	5	2.70
N (x100)	White	RC55	1SNA230193R2400	5	2.70
O (x100)	White	RC55	1SNA230194R2500	5	2.70
P (x100)	White	RC55	1SNA230195R2600	5	2.70
Q (x100)	White	RC55	1SNA230196R2700	5	2.70
R (x100)	White	RC55	1SNA230197R2000	5	2.70
S (x100)	White	RC55	1SNA230198R0100	5	2.70
T (x100)	White	RC55	1SNA230199R0200	5	2.70
U (x100)	White	RC55	1SNA230200R2700	5	2.70
V (x100)	White	RC55	1SNA230201R1400	5	2.70
W (x100)	White	RC55	1SNA230202R1500	5	2.70
X (x100)	White	RC55	1SNA230203R1600	5	2.70
Y (x100)	White	RC55	1SNA230204R1700	5	2.70
Z (x100)	White	RC55	1SNA230205R1000	5	2.70

1SNC160149S0201

6 mm 0.236 in spacing - horizontal mounting

Horizontal terminal block assembly

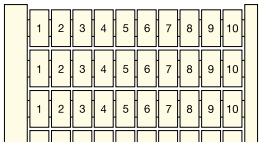

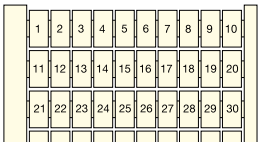

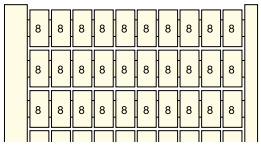

Description

- Save printing time with our large pre-printed card offer with pre-printed numbers, letters or symbols,
- To be used to mark screw clamp and spring clamp (side mounting) terminal blocks, and all Miniblocks from the SNA and Solution series.

Main technical data

Material	Flammability
Polyamide	V2

Ordering details

Description	Color	Type	Part Number	Pkg card	Weight (1 card) g
Card with 100 markers, ascending order repeated 10 times					
0->9 (x10)	White	RC65	1SNA232001R2500	5	3.50
1->10 (x10)	White	RC65	1SNA232002R2600	5	3.50
11->20 (x10)	White	RC65	1SNA232003R2700	5	3.50
21->30 (x10)	White	RC65	1SNA232004R2000	5	3.50
31->40 (x10)	White	RC65	1SNA232005R2100	5	3.50
41->50 (x10)	White	RC65	1SNA232006R2200	5	3.50
51->60 (x10)	White	RC65	1SNA232007R2300	5	3.50
61->70 (x10)	White	RC65	1SNA232008R0400	5	3.50
71->80 (x10)	White	RC65	1SNA232009R0500	5	3.50
81->90 (x10)	White	RC65	1SNA232010R2100	5	3.50
91->100 (x10)	White	RC65	1SNA232011R1600	5	3.50
101->110 (x10)	White	RC65	1SNA232012R1700	5	3.50
111->120 (x10)	White	RC65	1SNA232013R1000	5	3.50
121->130 (x10)	White	RC65	1SNA232014R1100	5	3.50
131->140 (x10)	White	RC65	1SNA232015R1200	5	3.50
141->150 (x10)	White	RC65	1SNA232016R1300	5	3.50
151->160 (x10)	White	RC65	1SNA232017R1400	5	3.50
161->170 (x10)	White	RC65	1SNA232018R2500	5	3.50
171->180 (x10)	White	RC65	1SNA232019R2600	5	3.50
181->190 (x10)	White	RC65	1SNA232020R2300	5	3.50
191->200 (x10)	White	RC65	1SNA232021R1000	5	3.50
Card with 100 markers, ascending order					
1->100	White	RC65	1SNA232030R2500	5	3.50
101->200	White	RC65	1SNA232031R1200	5	3.50
201->300	White	RC65	1SNA232032R1300	5	3.50
301->400	White	RC65	1SNA232033R1400	5	3.50
401->500	White	RC65	1SNA232034R1500	5	3.50
501->600	White	RC65	1SNA232035R1600	5	3.50
601->700	White	RC65	1SNA232036R1700	5	3.50
701->800	White	RC65	1SNA232037R1000	5	3.50
801->900	White	RC65	1SNA232038R2100	5	3.50
901->1000	White	RC65	1SNA232039R2200	5	3.50
Card with 100 markers, repeated identical numbers					
0 (x100)	White	RC65	1SNA232201R0200	5	3.50
1 (x100)	White	RC65	1SNA232202R0300	5	3.50
2 (x100)	White	RC65	1SNA232203R0400	5	3.50
3 (x100)	White	RC65	1SNA232204R0500	5	3.50
4 (x100)	White	RC65	1SNA232205R0600	5	3.50
5 (x100)	White	RC65	1SNA232206R0700	5	3.50
6 (x100) / 9 (x100)	White	RC65	1SNA232207R0000	5	3.50
7 (x100)	White	RC65	1SNA232208R1100	5	3.50
8 (x100)	White	RC65	1SNA232209R1200	5	3.50
10 (x100)	White	RC65	1SNA232211R2300	5	3.50
11 (x100)	White	RC65	1SNA232212R2400	5	3.50
12 (x100)	White	RC65	1SNA232213R2500	5	3.50
13 (x100)	White	RC65	1SNA232214R2600	5	3.50
14 (x100)	White	RC65	1SNA232215R2700	5	3.50
15 (x100)	White	RC65	1SNA232216R2000	5	3.50
16 (x100)	White	RC65	1SNA232217R2100	5	3.50
17 (x100)	White	RC65	1SNA232218R0200	5	3.50
18 (x100)	White	RC65	1SNA232219R0300	5	3.50
19 (x100)	White	RC65	1SNA232220R0000	5	3.50
20 (x100)	White	RC65	1SNA232221R2500	5	3.50

Continue on next page →

1SNC160150S0201

6 mm 0.236 in spacing - horizontal mounting

Ordering details

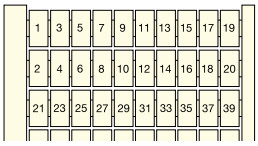

Description	Color	Type	Part Number		Pkg card	Weight (1 card) g
← Continuation of previous page						
Card with 100 markers, alternate odd/even numbers for double deck terminal blocks						
1->20 alternate odd/even	White ☐	RC65	1SNA232133R1500		5	3.50
21->40 alternate odd/even	White ☐	RC65	1SNA232134R1600		5	3.50
41->60 alternate odd/even	White ☐	RC65	1SNA232135R1700		5	3.50
61->80 alternate odd/even	White ☐	RC65	1SNA232136R1000		5	3.50
81->100 alternate odd/even	White ☐	RC65	1SNA232137R1100		5	3.50

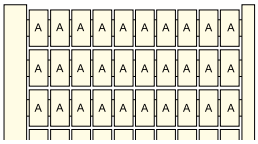

Card with 100 markers, repeated identical letters						
A (x100)	White ☐	RC65	1SNA232150R0200		5	3.50
B (x100)	White ☐	RC65	1SNA232151R2700		5	3.50
C (x100)	White ☐	RC65	1SNA232152R2000		5	3.50
D (x100)	White ☐	RC65	1SNA232153R2100		5	3.50
E (x100)	White ☐	RC65	1SNA232154R2200		5	3.50
F (x100)	White ☐	RC65	1SNA232155R2300		5	3.50
G (x100)	White ☐	RC65	1SNA232156R2400		5	3.50
H (x100)	White ☐	RC65	1SNA232157R2500		5	3.50
I (x100)	White ☐	RC65	1SNA232158R0600		5	3.50
J (x100)	White ☐	RC65	1SNA232159R0700		5	3.50
K (x100)	White ☐	RC65	1SNA232160R0400		5	3.50
L (x100)	White ☐	RC65	1SNA232161R2100		5	3.50
M (x100)	White ☐	RC65	1SNA232162R2200		5	3.50
N (x100)	White ☐	RC65	1SNA232163R2300		5	3.50
O (x100)	White ☐	RC65	1SNA232164R2400		5	3.50
P (x100)	White ☐	RC65	1SNA232165R2500		5	3.50
Q (x100)	White ☐	RC65	1SNA232166R2600		5	3.50
R (x100)	White ☐	RC65	1SNA232167R2700		5	3.50
S (x100)	White ☐	RC65	1SNA232168R0000		5	3.50
T (x100)	White ☐	RC65	1SNA232169R0100		5	3.50
U (x100)	White ☐	RC65	1SNA232170R0600		5	3.50
V (x100)	White ☐	RC65	1SNA232171R2300		5	3.50
W (x100)	White ☐	RC65	1SNA232172R2400		5	3.50
X (x100)	White ☐	RC65	1SNA232173R2500		5	3.50
Y (x100)	White ☐	RC65	1SNA232174R2600		5	3.50
Z (x100)	White ☐	RC65	1SNA232175R2700		5	3.50

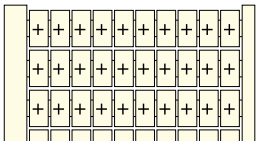

Card with 100 markers, repeated identical symbols						
+ (x100)	White ☐	RC65	1SNA232111R1700		5	3.50
- (x100)	White ☐	RC65	1SNA232112R1000		5	3.50
= (x100)	White ☐	RC65	1SNA232113R1100		5	3.50
~ (x100)	White ☐	RC65	1SNA232114R1200		5	3.50
⏚ (x100)	White ☐	RC65	1SNA232115R1300		5	3.50

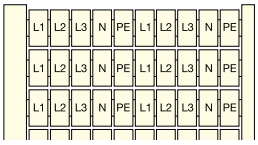

Card with 100 markers, 5 different symbols repeated 20 times						
L1-L2-L3-N-PE (x20)	White ☐	RC65	1SNA232131R1300		5	3.50

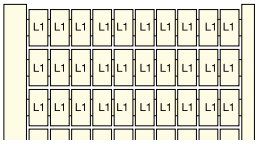

Card with 100 markers, repeated identical symbols						
L1 (x100)	White ☐	RC65	1SNA232116R1400		5	3.50
L2 (x100)	White ☐	RC65	1SNA232117R1500		5	3.50
L3 (x100)	White ☐	RC65	1SNA232118R2600		5	3.50
PE (x100)	White ☐	RC65	1SNA232119R2700		5	3.50

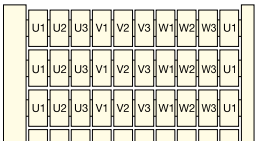

Card with 100 markers, 9 different symbols repeated 10 times						
U1-U2-U3-V1-V2-V3-W1-W2-W3 (x10) + U1 (x10)	White ☐	RC65	1SNA232132R1400		5	3.50

1SNC160150S0201

6 mm 0.236 in spacing - vertical mounting

Vertical terminal block assembly

Description

- Save printing time with our large pre-printed card offer with pre-printed numbers, letters or symbols,
- To be used to mark screw clamp and spring clamp (side mounting) terminal blocks, and all Miniblocks from the SNA and Solution series.

Main technical data

Material	Flammability
Polyamide	V2

Ordering details

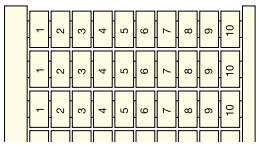

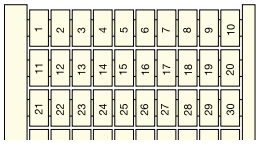

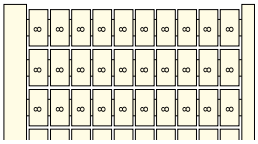

Description	Color	Type	Part Number	Pkg card	Weight (1 card) g
Card with 100 markers, ascending order repeated 10 times					
0->9 (x10)	White ☐	RC65	1SNA232040R0700	5	3.50
1->10 (x10)	White ☐	RC65	1SNA232041R2400	5	3.50
11->20 (x10)	White ☐	RC65	1SNA232042R2500	5	3.50
21->30 (x10)	White ☐	RC65	1SNA232043R2600	5	3.50
31->40 (x10)	White ☐	RC65	1SNA232044R2700	5	3.50
41->50 (x10)	White ☐	RC65	1SNA232045R2000	5	3.50
51->60 (x10)	White ☐	RC65	1SNA232046R2100	5	3.50
61->70 (x10)	White ☐	RC65	1SNA232047R2200	5	3.50
71->80 (x10)	White ☐	RC65	1SNA232048R0300	5	3.50
81->90 (x10)	White ☐	RC65	1SNA232049R0400	5	3.50
91->100 (x10)	White ☐	RC65	1SNA232050R0100	5	3.50
101->110 (x10)	White ☐	RC65	1SNA232051R2600	5	3.50
111->120 (x10)	White ☐	RC65	1SNA232052R2700	5	3.50
121->130 (x10)	White ☐	RC65	1SNA232053R2000	5	3.50
131->140 (x10)	White ☐	RC65	1SNA232054R2100	5	3.50
141->150 (x10)	White ☐	RC65	1SNA232055R2200	5	3.50
151->160 (x10)	White ☐	RC65	1SNA232056R2300	5	3.50
161->170 (x10)	White ☐	RC65	1SNA232057R2400	5	3.50
171->180 (x10)	White ☐	RC65	1SNA232058R0500	5	3.50
181->190 (x10)	White ☐	RC65	1SNA232059R0600	5	3.50
191->200 (x10)	White ☐	RC65	1SNA232072R2300	5	3.50
Card with 100 markers, ascending order					
1->100	White ☐	RC65	1SNA232060R0300	5	3.50
101->200	White ☐	RC65	1SNA232061R2000	5	3.50
201->300	White ☐	RC65	1SNA232062R2100	5	3.50
301->400	White ☐	RC65	1SNA232063R2200	5	3.50
401->500	White ☐	RC65	1SNA232064R2300	5	3.50
501->600	White ☐	RC65	1SNA232065R2400	5	3.50
601->700	White ☐	RC65	1SNA232066R2500	5	3.50
701->800	White ☐	RC65	1SNA232067R2600	5	3.50
801->900	White ☐	RC65	1SNA232068R0700	5	3.50
901->1000	White ☐	RC65	1SNA232069R0000	5	3.50
Card with 100 markers, repeated identical numbers					
0 (x100)	White ☐	RC65	1SNA232240R1400	5	3.50
1 (x100)	White ☐	RC65	1SNA232241R0100	5	3.50
2 (x100)	White ☐	RC65	1SNA232242R0200	5	3.50
3 (x100)	White ☐	RC65	1SNA232243R0300	5	3.50
4 (x100)	White ☐	RC65	1SNA232244R0400	5	3.50
5 (x100)	White ☐	RC65	1SNA232245R0500	5	3.50
6 (x100) / 9 (x100)	White ☐	RC65	1SNA232246R0600	5	3.50
7 (x100)	White ☐	RC65	1SNA232247R0700	5	3.50
8 (x100)	White ☐	RC65	1SNA232248R1000	5	3.50
10 (x100)	White ☐	RC65	1SNA232250R1600	5	3.50
11 (x100)	White ☐	RC65	1SNA232251R0300	5	3.50
12 (x100)	White ☐	RC65	1SNA232252R0400	5	3.50
13 (x100)	White ☐	RC65	1SNA232253R0500	5	3.50
14 (x100)	White ☐	RC65	1SNA232254R0600	5	3.50
15 (x100)	White ☐	RC65	1SNA232255R0700	5	3.50
16 (x100)	White ☐	RC65	1SNA232256R0000	5	3.50
17 (x100)	White ☐	RC65	1SNA232257R0100	5	3.50
18 (x100)	White ☐	RC65	1SNA232258R1200	5	3.50
19 (x100)	White ☐	RC65	1SNA232259R1300	5	3.50
20 (x100)	White ☐	RC65	1SNA232260R1000	5	3.50

Continue on next page →

1SNC160151S0201

6 mm 0.236 in spacing - vertical mounting

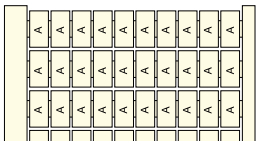

Ordering details

Description	Color	Type	Part Number		Pkg card	Weight (1 card) g
← Continuation of previous page						
Card with 100 markers, repeated identical letters						
A (x100)	White ☐	RC65	1SNA232180R2100		5	3.50
B (x100)	White ☐	RC65	1SNA232181R1600		5	3.50
C (x100)	White ☐	RC65	1SNA232182R1700		5	3.50
D (x100)	White ☐	RC65	1SNA232183R1000		5	3.50
E (x100)	White ☐	RC65	1SNA232184R1100		5	3.50
F (x100)	White ☐	RC65	1SNA232185R1200		5	3.50
G (x100)	White ☐	RC65	1SNA232186R1300		5	3.50
H (x100)	White ☐	RC65	1SNA232187R1400		5	3.50
I (x100)	White ☐	RC65	1SNA232188R2500		5	3.50
J (x100)	White ☐	RC65	1SNA232189R2600		5	3.50
K (x100)	White ☐	RC65	1SNA232190R2300		5	3.50
L (x100)	White ☐	RC65	1SNA232191R1000		5	3.50
M (x100)	White ☐	RC65	1SNA232192R1100		5	3.50
N (x100)	White ☐	RC65	1SNA232193R1200		5	3.50
O (x100)	White ☐	RC65	1SNA232194R1300		5	3.50
P (x100)	White ☐	RC65	1SNA232195R1400		5	3.50
Q (x100)	White ☐	RC65	1SNA232196R1500		5	3.50
R (x100)	White ☐	RC65	1SNA232197R1600		5	3.50
S (x100)	White ☐	RC65	1SNA232198R2700		5	3.50
T (x100)	White ☐	RC65	1SNA232199R2000		5	3.50
U (x100)	White ☐	RC65	1SNA232200R1500		5	3.50
V (x100)	White ☐	RC65	1SNA232235R2300		5	3.50
W (x100)	White ☐	RC65	1SNA232236R2400		5	3.50
X (x100)	White ☐	RC65	1SNA232237R2500		5	3.50
Y (x100)	White ☐	RC65	1SNA232238R0600		5	3.50
Z (x100)	White ☐	RC65	1SNA232239R0700		5	3.50

8 mm 0.315 in spacing - horizontal mounting

Horizontal terminal block assembly

Description

- Save printing time with our large pre-printed card offer with pre-printed numbers, letters or symbols,
- To be used to mark spring clamp terminal blocks and ADO System® Miniblocks from the SNA and Solution series.

Main technical data

Material	Flammability
Polyamide	V2

Ordering details

Description	Color	Type	Part Number	Pkg card	Weight (1 card) g
Card with 100 markers, ascending order repeated 10 times					
0->9 (x10)	White ☐	RCAL85	1SNA237001R2200	5	2.90
1->10 (x10)	White ☐	RCAL85	1SNA237002R2300	5	2.90
11->20 (x10)	White ☐	RCAL85	1SNA237003R2400	5	2.90
21->30 (x10)	White ☐	RCAL85	1SNA237004R2500	5	2.90
31->40 (x10)	White ☐	RCAL85	1SNA237005R2600	5	2.90
41->50 (x10)	White ☐	RCAL85	1SNA237006R2700	5	2.90
51->60 (x10)	White ☐	RCAL85	1SNA237007R2000	5	2.90
61->70 (x10)	White ☐	RCAL85	1SNA237008R0100	5	2.90
71->80 (x10)	White ☐	RCAL85	1SNA237009R0200	5	2.90
81->90 (x10)	White ☐	RCAL85	1SNA237010R2600	5	2.90
91->100 (x10)	White ☐	RCAL85	1SNA237011R1300	5	2.90
101->110 (x10)	White ☐	RCAL85	1SNA237012R1400	5	2.90
111->120 (x10)	White ☐	RCAL85	1SNA237013R1500	5	2.90
121->130 (x10)	White ☐	RCAL85	1SNA237014R1600	5	2.90
131->140 (x10)	White ☐	RCAL85	1SNA237015R1700	5	2.90
141->150 (x10)	White ☐	RCAL85	1SNA237016R1000	5	2.90
151->160 (x10)	White ☐	RCAL85	1SNA237017R1100	5	2.90
161->170 (x10)	White ☐	RCAL85	1SNA237018R2200	5	2.90
171->180 (x10)	White ☐	RCAL85	1SNA237019R2300	5	2.90
181->190 (x10)	White ☐	RCAL85	1SNA237020R2000	5	2.90
191->200 (x10)	White ☐	RCAL85	1SNA237021R1500	5	2.90

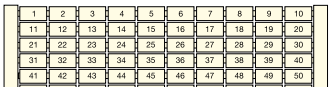

Card with 100 markers, ascending order					
1->100	White ☐	RCAL85	1SNA237030R2200	5	2.90
101->200	White ☐	RCAL85	1SNA237031R1700	5	2.90
201->300	White ☐	RCAL85	1SNA237032R1000	5	2.90
301->400	White ☐	RCAL85	1SNA237033R1100	5	2.90
401->500	White ☐	RCAL85	1SNA237034R1200	5	2.90
501->600	White ☐	RCAL85	1SNA237035R1300	5	2.90
601->700	White ☐	RCAL85	1SNA237036R1400	5	2.90
701->800	White ☐	RCAL85	1SNA237074R2200	5	2.90
801->900	White ☐	RCAL85	1SNA237075R2300	5	2.90
901->1000	White ☐	RCAL85	1SNA237076R2400	5	2.90

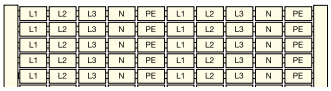

Card with 100 markers, 5 different symbols repeated 20 times					
L1-L2-L3-N-PE (x20)	White ☐	RCAL85	1SNA237131R1000	5	2.90

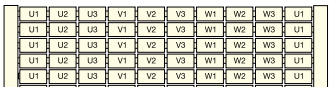

Card with 100 markers, 9 different symbols repeated 10 times					
U1-U2-U3-V1-V2-V3-W1-W2-W3 (x10) + U1 (x10)	White ☐	RCAL85	1SNA237132R1100	5	2.90

1SNC160152S0201

8 mm 0.315 in spacing - vertical mounting

Vertical terminal block assembly

Description

- Save printing time with our large pre-printed card offer with pre-printed numbers, letters or symbols,
- To be used to mark spring clamp terminal blocks and ADO System® Miniblocks from the SNA and Solution series.

Main technical data

Material	Flammability
Polyamide	V2

Ordering details

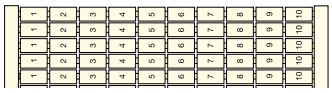

Description	Color	Type	Part Number		Pkg card	Weight (1 card) g
Card with 100 markers, ascending order repeated 10 times						
0->9 (x10)	White ☐	RCAL85	1SNA237040R0400		5	2.90
1->10 (x10)	White ☐	RCAL85	1SNA237041R2100		5	2.90
11->20 (x10)	White ☐	RCAL85	1SNA237042R2200		5	2.90
21->30 (x10)	White ☐	RCAL85	1SNA237043R2300		5	2.90
31->40 (x10)	White ☐	RCAL85	1SNA237044R2400		5	2.90
41->50 (x10)	White ☐	RCAL85	1SNA237045R2500		5	2.90
51->60 (x10)	White ☐	RCAL85	1SNA237046R2600		5	2.90
61->70 (x10)	White ☐	RCAL85	1SNA237047R2700		5	2.90
71->80 (x10)	White ☐	RCAL85	1SNA237048R0000		5	2.90
81->90 (x10)	White ☐	RCAL85	1SNA237049R0100		5	2.90
91->100 (x10)	White ☐	RCAL85	1SNA237050R0600		5	2.90
101->110 (x10)	White ☐	RCAL85	1SNA237051R2300		5	2.90
111->120 (x10)	White ☐	RCAL85	1SNA237080R2500		5	2.90
121->130 (x10)	White ☐	RCAL85	1SNA237081R1200		5	2.90
131->140 (x10)	White ☐	RCAL85	1SNA237082R1300		5	2.90
141->150 (x10)	White ☐	RCAL85	1SNA237083R1400		5	2.90
151->160 (x10)	White ☐	RCAL85	1SNA237084R1500		5	2.90
161->170 (x10)	White ☐	RCAL85	1SNA237085R1600		5	2.90
171->180 (x10)	White ☐	RCAL85	1SNA237086R1700		5	2.90
181->190 (x10)	White ☐	RCAL85	1SNA237087R1000		5	2.90
191->200 (x10)	White ☐	RCAL85	1SNA237088R2100		5	2.90
Card with 100 markers, ascending order						
1->100	White ☐	RCAL85	1SNA237060R0000		5	2.90
101->200	White ☐	RCAL85	1SNA237061R2500		5	2.90
201->300	White ☐	RCAL85	1SNA237062R2600		5	2.90
301->400	White ☐	RCAL85	1SNA237063R2700		5	2.90
401->500	White ☐	RCAL85	1SNA237064R2000		5	2.90
501->600	White ☐	RCAL85	1SNA237065R2100		5	2.90
601->700	White ☐	RCAL85	1SNA237066R2200		5	2.90
701->800	White ☐	RCAL85	1SNA237067R2300		5	2.90
801->900	White ☐	RCAL85	1SNA237068R0400		5	2.90

1SNC160153S0201

RCT terminal block markers

Pre-printed markers for SNA and Solution series

Vertical terminal block assembly

Description

- Save printing time with our large pre-printed card offer with pre-printed numbers, letters or symbols,
- Card with 100 markers, ascending order.

Main technical data

Material	Flammability
Polyamide	V2

Ordering details

Description	Color	Type	Part Number		Pkg card	Weight (1 card) g

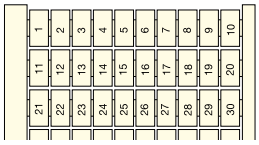

6 mm *0.236 in* spacing

RCT610

To be used to top mark MA2,5/5-CPE.., screw clamp, ADO System® and spring loaded screw clamp (top marking) terminal blocks from the SNA and Solution series.

1 -> 100	White ☐	RCT610	1SNA236001R2100		5	6.00

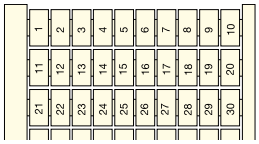

8 mm *0.315 in* spacing

RCT810

To be used to mark 9.5 mm *0.374 in* or 12.5 mm *0.492 in* spacing screw clamp (top marking), ADO System®, spring loaded screw clamp and ring lug terminal blocks from the SNA and Solution series.

1 -> 100	White ☐	RCT810	1SNA236501R2300		5	8.00

1SNC160155S0201

6 mm 0.236 in to 12 mm 0.472 in spacing - top marking

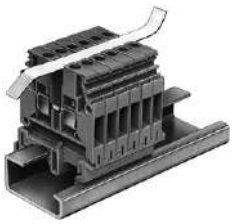

RTM7

Description

- Save printing time with our large pre-printed card offer with pre-printed numbers, letters or symbols,
- To be used to mark screw clamp and ADO System® terminal blocks from the SNA and Solution series,
- Spacing corresponds to the pitch between numbers.

Main technical data

Material	Flammability
PVC	V0

Ordering details

Length mm	Color	Type	Part Number		Pkg card	Weight (1 card) g

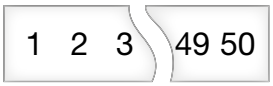

6 mm *0.236 in* spacing

1 marking strip with black print from 1 to 50 on one side and 51 to 100 on the other side

300	White ☐	RTM7	1SNA103115R1300		1	1.00

8 mm *0.315 in* spacing

1 marking strip with black print from 1 to 50 on one side and 51 to 100 on the other side

400	White ☐	RTM7	1SNA103116R1400		1	1.00

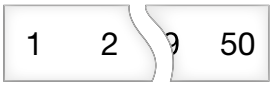

10 mm *0.394 in* spacing

1 marking strip with black print from 1 to 50 on one side and 51 to 100 on the other side

500	White ☐	RTM7	1SNC160156S0201		1	1.00

REH3 terminal block markers

Pre-printed markers for Solution series

1SNC160191F0014

Horizontal terminal block assembly

1	2	3	4	5	6
103	104	105	106	107	108

Description

- Save printing time with our large pre-printed card offer with pre-printed numbers, letters or symbols,
- To be used to mark 13 mm *0.512 in* or 16 mm *0.630 in* spacing ring lug terminal blocks from the Solution series,
- Red print on white background (black print on white background on request).

Main technical data

Material	Flammability
Cellulose acetate	V2

Ordering details

Description	Color	Type	Part Number	Pkg card	Weight (1 card) g
Card with 680 precut labels with numbers - Red print on white background					
6 series from 1 to 102 + 1 series from 103 to 170	Red	REH3	1SNA163167R2200	1	20.00
22 series from 1 to 30 + 1 series from 1 to 20	Red	REH3	1SNA164695R2500	1	20.00

5

1SNC160154S0201

5 mm 0.197 in to 12 mm 0.472 in spacing - top marking

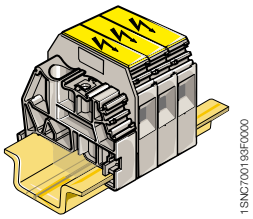

EPU5

Description

- Protective label used to indicate live circuits,
- Prohibits access to connection screws,
- To be snapped directly onto the terminal block,
- To be used to cover one single screw clamp terminal block from the SNA and Solution series.

Main technical data

Material	Flammability
Polyamide	V2

Ordering details

Description	Color	Type	Part Number		Pkg card	Weight (1 card) g
5 mm *0.197 in* spacing						
EPU5						
For MA2,5/5 SNA terminal blocks						
Yellow label with black arrow	Yellow	EPU5	1SNA107033R1000		1	2.00
6 mm *0.237 in* to 10 mm *0.394 in* spacing						
EPU6						
For M4/6, M6/8, M10/10 and M16/12 SNA terminal blocks (use two labels for M16/12)						
Yellow label with black arrow	Yellow	EPU6	1SNA107038R2500		1	2.00

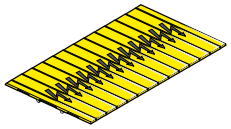

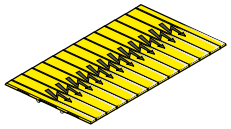

6 mm 0.236 in to 22 mm 0.866 in spacing - top marking

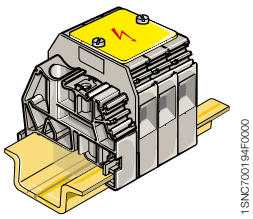

EP

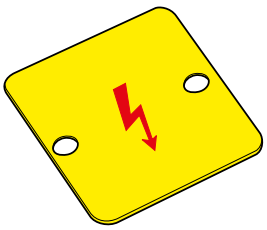

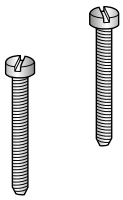

Description

- Yellow label with red arrow, used to indicate live circuits,
- Prohibits access to connection screws and protects connections from dust and from touch,
- To be mounted using 2 nylon VSP screws (ordered separately),
- Can cover 3 or 4 terminal blocks.

Main technical data

Material	Flammability
PVC	V0

Ordering details

Description	Color	Type	Part Number	Pkg card	Weight (1 card) g
EP6					
For 4x M4/6, or 3x M6/8 or M6/8.RS terminal blocks	Yellow	EP6	1SNA163427R1700	10	0.41
EP8					
For 4x M6/8 or M6/8.RS, or 3x M10/10 or M10/10.RS terminal blocks	Yellow	EP8	1SNA163428R2000	10	0.59
EP10					
For 4x M10/10 or M10/10.RS, or 3x M16/12 terminal blocks	Yellow	EP10	1SNA163429R2100	10	0.74
EP12					
For 4x M16/12 or 3x M35/16 terminal blocks	Yellow	EP12	1SNA163430R2600	10	0.85
EP16					
For 4x M35/16 terminal blocks	Yellow	EP16	1SNA163431R1300	10	1.1
EP223					
For 3x D70/22 terminal blocks	Yellow	EP223	1SNA173327R2400	10	
EP224					
For 4x D70/22 terminal blocks	Yellow	EP224	1SNA173328R0500	10	10.00

Compatible screws

Nylon screw		VSP6	1SNA163433R1500	20	0.21
Nylon screw		VSP12	1SNA163432R1400	20	0.1
Nylon screw		VSP16	1SNA173147R2000	20	0.3
Nylon screw		VSP68	1SNA206103R0700	20	0.6
Nylon screw		VSP22	1SNA400252R1200	20	0.25

Selection guide for cover and fixing screw depending on terminal block type

Terminal block	3 terminal blocks aligned		4 terminal blocks aligned		Screws for protection label	
	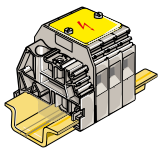		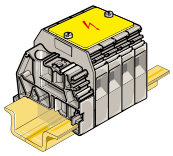		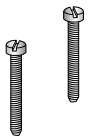	
Type	**Cover type**	**Cover part number**	**Cover type**	**Cover part number**	**Type**	**Part Number**
M4/6	–	–	EP6	1SNA163427R1700	VSP6	1SNA163433R1500
M6/8	EP6	1SNA163427R1700	EP8	1SNA163428R2000		
M10/10	EP8	1SNA163428R2000	EP10	1SNA163429R2100		
M16/12	EP10	1SNA163429R2100	EP12	1SNA163430R2600	VSP12	1SNA163432R1400
M35/16	EP12	1SNA163430R2600	EP16	1SNA163431R1300	VSP16	1SNA173147R2000
D70/22	EP223	1SNA173327R2400	EP224	1SNA173328R0500	VSP22	1SNA400252R1200
M6/8.RS	EP6	1SNA163427R1700	EP8	1SNA163428R2000	VSP68	1SNA206103R0700
M10/10.RS	EP8	1SNA163428R2000	EP10	1SNA163429R2100		

1SNC160158S0201

Order form
Customized marking

Vertical terminal block assembly

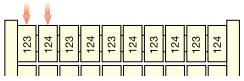

8 characters max. on MC512PA, MC612PA, MC812PA

7 characters max. on RC 410, RC 510, RC 610, RC 810 and RC 1010 markers

3 characters max. on RC 55, RC 65 and RCAL 85 markers

Horizontal terminal block assembly

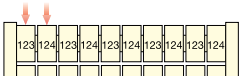

4 characters max. on MC812PA

3 characters max. on MC512PA, MC612PA

7 characters max. on RC1010

5 characters max. on RC810, RCAL85

3 characters max. on RC510, RC55, RC610, RC65

2 characters max. on RC410

TO AVOID ANY ERRORS, PLEASE WRITE VERY CLEARLY

Type of card:

10 strips of 10 markers for SNK series terminal blocks with 5.2 mm *0.205 in* spacing ..... ☐ **MC 512 PA**

10 strips of 10 markers for SNK series terminal blocks with 6 mm *0.236 in* spacing ..... ☐ **MC 612 PA**

10 strips of 10 markers for SNK series terminal blocks with 8 mm *0.315 in* spacing ..... ☐ **MC 812 PA**

10 strips of 10 markers for screw and spring terminal blocks with 4 mm *0.157 in* spacing ..... ☐ **RC 410**

10 strips of 10 markers for screw, spring and ADO terminal blocks with 5 mm *0.197 in* spacing ..... ☐ **RC 510**

10 strips of 10 markers for screw, spring and ADO terminal blocks with 6 mm *0.236 in* spacing ..... ☐ **RC 610**

10 strips of 10 markers for screw, spring and ADO terminal blocks with 8 mm *0.315 in* spacing ..... ☐ **RC 810**

10 strips of 8 markers for screw and spring terminal blocks with 10 mm *0.394 in* spacing and above.. ☐ **RC 1010**

10 strips of 10 markers for screw, spring and ADO terminal blocks with 5 mm *0.197 in* spacing ..... ☐ **RC 55**

10 strips of 10 markers for screw, spring and ADO terminal blocks with 6 mm *0.236 in* spacing ..... ☐ **RC 65**

10 strips of 10 markers for screw, spring and ADO terminal blocks with 8 mm *0.315 in* spacing and above... ☐ **RCAL 85**

Quantity: _____

Order No.: _____

Name: _____

Company: _____

Delivery address: _____

_____

Zip code: _____ **City:** _____

Tel.: _____ **Fax:** _____

E-mail: _____

For any order, please contact your local sales agent

1SNC160218S0201

MG3 markers selection guide for other manufacturers' terminal blocks

Terminal block

MG-CPM terminal block markers are available in versions to suit the particular terminal block formats of the most widely used products, see selection guide to side.

Depending on type, markers are presented as joined strips at a set or as separate markers for convenient individual insertion on mixed spacing terminal block assemblies.

Order form
Customized marking

Markers

Strip markers

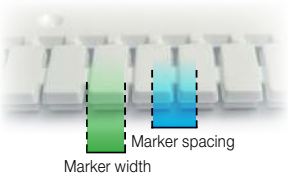

Individual markers

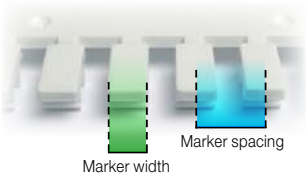

Strip mounting (Marker spacing = Terminal block spacing)

P - Single clips to spacing

Marker width = Terminal block width

M - Modular strip

Marker width < Terminal block width

CP - Single clips compatible to spacing

Marker width < Terminal block width

Individual mounting (Marker spacing ≠ Terminal block spacing)

S - Single clips

Marker width = Terminal block width

C - Single clips compatible

Marker width < Terminal block width

1SNC160219S0201

MG3 markers selection guide for other manufacturers' terminal blocks

BECKHOFF

Size mm	4.2x9
Marker / Terminal block	MG-CPM-12 46390
KL 9010	C

Cabur

Size mm	5x10	5x10	5x10	6x10	5x12	4.2x9
Marker / Terminal block	MG-CPM-03 41291	MG-CPM-03 41293	MG-CPM-04 41390N	MG-CPM-04 41391	MG-CPM-10 46192	MG-CPM-12 46390
CBD.2/4	S		P		P	
CBD.4/6	C		C	M	C	M
CBD.2/4/SH	S		S		P	
CBD.4/6/SH	C		C	M	C	M
CBD.6/10	C		CP		C	
CBD.10/6	C		C		C	
CBD. 16/25	C		C		C	
CBD. 35	C		C		C	
CBC.2/4	P	M	S		S	
CBC.4/6	C		C	M	C	M
CBC 35/50	C		C		C	
DAS.4/6...DAS.4/6/SS	C		C		C	
DSS.4/6	C		C	M	C	M
CBR.2/4	P	M	S		S	
FVS.4/6	C		C	M	C	M
FFS.4/6	C		C	M	C	M
TLS.2/4	C		C		C	
TLE.2/4	C		C		C	
TLD.2/4	C		C		C	
TDE.2/4	C		C		C	
PCE.4/6/...	C		C	M	C	M
PCE.4/X...	C		C		C	
SFR.4/6...SFR.4/6/C230	C		CP		C	
SFO.4/6...SFO.4/6/C230	C		CP	M	C	M
FPC.10/16	C		C		C	
FPL.10/16...FPL.10/16/C230	C		C		C	
SFR.4/D1A...SFR.4/D3A	C		CP		C	
MPS.2/4/SW...MPS.2/4/SV	S		S		P	
MPS.4/6...MPS.4/6/VS	C		C		C	
SCB.4/6...SCB.&/10/CD	C		C		C	
AFO.2/1+1...AFO.2/2+2/TP	C		C		C	
PDF.2	C		C		C	
FDP.2	C		C		C	
CVF.4/6...CVF.4/6/TP	C		C		C	
TC/PO	S		S		P	
VPC.2/4	S		S		S	
VPD.2/	S		S		S	
GPM.95/BB...GPM.240/300/CC	C		C		C	
GPA.70...GPA.240	C		C		C	
ACB.70/BB...ACB.185/240/CC	C		C		C	
BCA.70/BB...BCA.120/185/CC	C		C		C	

Cabur

Size mm	5x10	5x10	5x10	6x10	5x12	4.2x9
Marker / Terminal block	MG-CPM-03 41291	MG-CPM-03 41293	MG-CPM-04 41390N	MG-CPM-04 41391	MG-CPM-10 46192	MG-CPM-12 46390
MBL.50/6...MBL.150/12	C		C		C	
TEO.2/4	S		S		P	
TEO.4/6	C		C	M	C	
CBE.2/4	P	M	S		S	
TE.4/6/D...TE.50/D...TE.50/O	C		C		S	
RN.2/4	P	M	S		S	
RP.4/6	C		C		C	
RFI.2	C		C		C	
TR.2/4	P	M	S		S	
TR.4/6	P	M	S		S	
MAC.6/10...MAC.6/10/N	C		CP		C	
CAM...CAM/C	C		CP		C	
NCS	C		C		C	
NCV	C		C		C	
CNT.6...CNT.35	C		P		C	
HMM.1/2,5...HMM.1/2,5/2+2						P
HMM.2/4...HMM.6/10					C	
HTE.2/4...HTE.6/10					C	
HMD.2N...HMD.2/4					C	P
HMS.2/4					C	
HMF.4/6...HMF.4/6/L115					C	
EDM.2/4	S		S		P	
EDM.4/6...EDM.70/50/BC	C		C	M		
SV.2...SV.2/VS	S		S		P	
SV.4/6...SV.10/16	C		C		C	
CPS.4/6	C		C		C	
SCX.10/16...SCX.10/16-PI	C		C		C	
SFC.10/16	C		C		C	
SFL.10/16	C		C		C	
FLD.10/16/F5...FLD.10/16/D	C		C		C	
VLM.10/16...VLM.10/16/O	C		C		C	
VL.16...VL.16/O-M	C		C		C	
TC/DIN	S		S		P	
VNF.6/10...VNF.6/10/STP	C		C		C	
CDA.70/BC...CDA.185/BB	C		C		C	
BTU	C		P		C	
BT/3	C		P		C	
BT/2	C		P		C	
BT/DIN/PO	C		P		C	

Connectwell

Size mm	5x10	5x15	5x7	5x10	5x10	5x10	5x10	5x10	5x12	4.2x9
Marker / Terminal block	MG-CPM-01 41090N	MG-CPM-01 41091N	MG-CPM-01 41094	MG-CPM-03 41291	MG-CPM-03 41293	MG-CPM-04 41390N	MG-CPM-04 41340N	MG-CPM-04 41395	MG-CPM-10 41692	MG-CPM-12 46390
CDB4/2(1)				S	S	P	P	M		
CMC2-2				S	S	P	P	M		
CGT6N				S		S	S			
CSCG10T				S		S	S			

6

1SNC160219S0201

MG3 markers selection guide for other manufacturers' terminal blocks

Connectwell

Size mm	5x10	5x15	5x7	5x10	5x10	5x10	5x10	5x10	5x12	4.2x9
Marker / Terminal block	MG-CPM-01 41090N	MG-CPM-01 41091N	MG-CPM-01 41094	MG-CPM-03 41291	MG-CPM-03 41293	MG-CPM-04 41390N	MG-CPM-04 41340N	MG-CPM-04 41395	MG-CPM-10 41692	MG-CPM-12 46390
CGT16N				S		S	S			
AS2.5/4				S	S	P	P	M		
CTU4U				S	S	P	P	M		
CTS6UCR				S		S	S			
CTS4UN				S	S	P	P	M		
CT25UCR				S		S	S			
CMDB4/2				S		S	S			
CSDL6U				S		S	S			
CSC2.5T1-2				S	S	P	P	M		
AS6				S		S	S			
CT25U				S		S	S			
CGT4UN				S	S	P	P	M		
CGT10N				S		S	S			
DDFL4UELR24V				S		S	S			
DDFL4UEL				S		S	S			
CSC2.5T2-2				S	S	P	P	M		
CTS10U				S		S	S			
AS4/3				S		S	S			
CTS10USC				S		S	S			
AS2.5/3				S	S	P	P	M		
CENC16				S		S	S			
DDFL4U				S		S	S			
CTS2.5UNCR				S	S	P	P	M		
CDTTU				S		S	S			
CSC4T1-2				S	S	P	P	M		
CKT4U				S		S	S			
CSC4T2-2				S		S	S			
CSCG4T				S		S	S			
CTS6U				S		S	S			
CSC4T				S		S	S			
CSCG2.5T				S	S	P	P	M		
CSFL6U				S		S	S			
CENC35				S		S	S			
CGT10U				S		S	S			
CSDL4U				S		S	S			
CSC6T				S		S	S			
CGT4U				S		S	S			
AS4/4				S		S	S			
AS4				S		S	S			
CTS4UNCR				S		S	S			
CTS6USC				S		S	S			
STH4				S		S	S			
CTS16U				S		S	S			
CSCG16T				S		S	S			
CSC6T1-2				S		S	S			
CSC2.5T				S	S	P	P	M		
ODL4U				S		S	S			
CMC1-2				S		S	S			
CDB6/2				S		S	S			
ODL4UA				S		S	S			
AS2.5				S	S	P	P	M		
ADL2.5				S	S	P	P	M		
CDB25/2				S		S	S			
CTS25U				S		S	S			
CDTTUSH				S		S	S			
CTS35UN				S		S	S			
CT35UCR				S		S	S			
CTS10UCR				S		S	S			
CMDB10/2				S		S	S			

Connectwell

Size mm	5x10	5x15	5x7	5x10	5x10	5x10	5x10	5x10	5x12	4.2x9
Marker / Terminal block	MG-CPM-01 41090N	MG-CPM-01 41091N	MG-CPM-01 41094	MG-CPM-03 41291	MG-CPM-03 41293	MG-CPM-04 41390N	MG-CPM-04 41340N	MG-CPM-04 41395	MG-CPM-10 41692	MG-CPM-12 46390
CTS25UN				S		S	S			
CMDB6/2				S		S	S			
CGT35U				S		S	S			
CSC16T				S		S	S			
CTS95U	S	S	S						S	M
CSC10T				S		S	S			
CTS35U				S		S	S			
CTS16UCR				S		S	S			
CTS50U	S	S	S						S	M
CSFL4U				S		S	S			
STH4DT				S		S	S			
CDB10/2				S		S	S			
ASF4				S		S	S			
DDFL4UE24V				S		S	S			
CSFL4UL24V				S		S	S			
DDDL4U				S		S	S			
DDFL4ULR				S		S	S			
CTS4UNCR				S		S	S			
CTS2.5UN				S	S	P	P	M		
CMDB6/2				S		S	S			
CTS2.5M			S							M
CTS4SC			S							M
CTS6			S							M
CTS6SC			S							M
CTSSRN5			S							M
CTS10SC										M
CTS16			S							M
CTS10			S							M

Conta Clip

Size mm	5x10	5x15	5x10	5x7
Marker / Terminal block	MG-CPM-01 41090N	MG-CPM-01 41091N	MG-CPM-02 41190N	MG-CPM-01 41094
PK-TS 15/35	C	C	C	C
ZRKG	C	C	C	C
ZSLG	C	C	C	C
ZSLN	C	C	C	C
ZSRK	C	C	C	C
ZVMAK	C	C	C	C

Legrand

Serie Viking 3	MG-CPM-09 41890 5x10 mm white PVC legend

1SNC1602195O201

MG3 markers selection guide for other manufacturers' terminal blocks

Morsettitalia

Size mm	5x10	4.2x9
Marker / Terminal block	MG-CPM-01 41090N	MG-CPM-12 46390
Serie EURO	S	S

Phoenix Contact

Size mm	5x10	5x10	5X10	6x10	5x10	
Marker / Terminal block	MG-CPM-03 41291	MG-CPM-04 41390N	MG-CPM-04 41395	MG-CPM-04 41391	MG-CPM-07 41691	STF-04 42804 bracket
ASI IO SL DI 4/4	C	C			M	
ASI IO SL DIO 4/2/2	C	P			M	
ASI IO SL DIO 8/4/4	C	P			M	
ASI IO SL DO 4/4	C	P			M	
DFK ...	C	P		P	M	
DFK 4	C	P		P	M	
DFK 4 - PE	C	P		P	M	
DFK 4 - SI	C	C				M
DIK 1.5	C	C				M
DIK 1.5 - LA (RD)	C	C				M
DIKD 1.5	C	C				M
DIKD 1.5 - LA	C	C				M
DIKD 1.5 - PV	C	C				M
DLK 2.5 - PE	C	C				M
DLKB 2.5 PE	C	C				M
DOK 1.5 - 2D	C	C				M
DOK 1.5 LA	C	C				M
DOK 1.5 TG	C	C				M
DOKD 1.5 - TG	C	C				M
E - UK	C	C				M
GBS 5-UK/B	S	P	M			M
GTF 76/230	C	C				M
IBIL ...	C	C				M
K4 - SP	C	P	M			M
MBK 3/ E - Z	S	P	M			M
MBK 3/ E - Z -PE	S	S				M
MBK 6 / E	C	P	M	C		M
MBKKB 2.5	S	P	M			M
MBKKB 2.5 - DIO	S	P	M			M
MBKKB 2.5 - PV	S	P	M			M
MBKKB 2.5 + V	S	S				M
MBT 2.5	C	C				M
MBT 2.5 PE	C	C				M
MSLKG 6	C	C				M
MTK - LOE	S	P	M	C		M
MTK - P/P	S	P	M	C		M
MTK - TP	S	P	M	C		M
MTKD-...	C	C		C		M
OTTA 2.5	C	C				M
OTTA 2.5 PE	C	C				M
OTTA 6	C	C		C		M
OTTA 6 - PE	C	C		C		M

Phoenix Contact

Size mm	5x10	5x10	5X10	6x10	5x10			
Marker / Terminal block	MG-CPM-03 41291	MG-CPM-04 41390N	MG-CPM-04 41395	MG-CPM-04 41391	MG-CPM-07 41691	STF-04 42804 bracket		
OTTA 6 - T	C	C		C		M		
OTTA 25	C	C		C		M		
PIK 4 -L	C	C		P		M		
PIK 4 - L / L	C	C		P		M		
PIK 4 - L / LB	C	C		P		M		
PIK 4- PE / L / NT	C	C		P		M		
PIK 4 - PE / L / NTB	C	C		P		M		
PIK 4 PE / L / L	C	C		P		M		
PIK 4 PE / L / N	C	C		P		M		
PIK 6 - L / L	C	C		C		M		
PIK 6 - PE / L / L	C	C		C		M		
PIK 6 - PE / L / N	C	C		C		M		
PLC RSC	C	C				M		
PLC BSC		S						
QT 1.5	C	C				M		
QT 1.5 TWIN	C	C				M		
QT 1.5-PE	C	C				M		
RTK	C	C		C		M		
SLKK 5	C	C		C		M		
SLKK 5 - LA	C	C		C		M		
SSK 0525 KER-EX	C	C		C		M		
SSK 110 KER-EX	C	C		C		M		
SSK 116 KER-EX	C	C		C		M		
ST.....	C	P	M	C	P	M	M	
STU.....	C	P	M	C	P	M	M	
STS...	C	P	M	C	P	M		
STI....	C	P	M	C	P	M		
STN...	C	P	M	C	P	M		
STTB				C	P			
TML...	C	C		C		M		
UDK 3	S	P	M			M		
UDK 3 - PE	S	P	M			M		
UDK 4	C	C		P		M		
UDK 4 - ILA	C	C		P		M		
UDK 4 - ULA	C	C		P		M		
UDK 4 MTK - P / P	C	C		P		M		
UDK 4 TG	C	C		P		M		
UDMTK 5 - P / P	C	C		C		M		
UDMTK 5 - TWIN - P/P	C	C		C		M		
UHSK / S 2000	C	C		C		M		
UHV 25	C	C		C		M		
UHV 50	C	C		C		M		
UHV 95	C	C		C		M		
UHV 150	C	C		C		M		
UHV 240	C	C		C		M		
UIK 16	C	C		C		M		
UIK 16 - PE / N	C	C		C		M		
UIK 35 - PE / N	C	C		C		M		
UIKN 35	C	C		C		M		
UISLKG 16	C	C		C		M		
UISLKG 35	C	C		C		M		
UK - FRONT 4	C	C		C		M		
UK - FRONT 4 - PE	C	C		C		M		
UK 2.5	S	P	M			M		
UK 2.5 B	C	C				M		
UK 2.5 LOER	C	C				M		
UK 2.5 N	S	P	M			M		
UK 3	S	P	M			M		

1SNC160219S0201

MG3 markers selection guide for other manufacturers' terminal blocks

Phoenix Contact

Size mm	5x10	5x10	5X10	6x10	5x10	
Marker / Terminal block	MG-CPM-03 41291	MG-CPM-04 41390N	MG-CPM-04 41395	MG-CPM-04 41391	MG-CPM-07 41691	STF-04 42804 bracket
UK 3 - EX	S	P	M			M
UK 3 - RETURN	S	P	M			M
UK 3 - RETURN - PE	S	P	M			M
UK 3 - TWIN	S	P	M			M
UK 3 - TWIN - PE	S	P	M			M
UK 3 N	S	P	M			M
UK 4	C	C		P		M
UK 4 - TG	C	C		P		M
UK 4 - TG -LOER - P/P	C	C		P		M
UK 4 FS / FS	C	C		P		M
UK 4 FSR	C	C		P		M
UK 4 LOER	C	C		P		M
UK 4 TP	C	C		P		M
UK 4 TP / TP	C	C		P		M
UK 5	C	C		C		M
UK 5 - HESI	C	C		C		M
UK 5 - MTK - P/P	C	C		C		M
UK 5 - R - L	C	C		C		M
UK 5 - TWIN	C	C		C		M
UK 5 - TWIN - EX	C	C		C		M
UK 5 / R - DRAHT	C	C		C		M
UK 5 N	C	C		C		M
UK 5 RETURN	C	C		C		M
UK 5 RETURN - PE	C	C		C		M
UK 5 TWIN	C	C		C		M
UK 5 TWIN - PE	C	C		C		M
UK 6	C	C		C		M
UK 6 N	C	C		C		M
UK 6.3 HESI	C	C		C		M
UK 10	C	C		C		M
UK 10 - DREHSI	C	C		C		M
UK 10 - EX	C	C		C		M
UK 10 - N-PE / N	C	C		C		M
UK 10 - PLUS	C	C		C		M
UK 10 - PLUS - PE	C	C		C		M
UK 10 - TWIN	C	C		C		M
UK 10 - TWIN - PE	C	C		C		M
UK 10 N	C	C		C		M
UK 10 RETURN	C	C		C		M
UK 10 RETURN - PE	C	C		C		M
UK 10.3 - HESI	C	C		C		M
UK 16	C	C		C		M
UK 16 - EX	C	C		C		M
UK 16 - PE / N	C	C		C		M
UK 16 N	C	C		C		M
UK 16 N - EX	C	C		C		M
UK 16 N - PE / N	C	C		C		M
UK 35	C	C		C		M
UK 35 - EX	C	C		C		M
UK 35 - PE / N	C	C		C		M
UK SI	C	C		C		M
UKB 4 FS ...	C	C		C		M
UKD 4 PE	C	C		C		M
UKH 25	C	C		C		M
UKH 50	C	C		C		M
UKH 50 - PE / N	C	C		C		M
UKH 95	C	C		C		M
UKH 95 - PE / N	C	C		C		M

Phoenix Contact

Size mm	5x10	5x10	5X10	6x10	5x10	
Marker / Terminal block	MG-CPM-03 41291	MG-CPM-04 41390N	MG-CPM-04 41395	MG-CPM-04 41391	MG-CPM-07 41691	STF-04 42804 bracket
UKH 150	C	C		C		M
UKH 240	C	C		C		M
UKK 3	S	S		C		M
UKK 4 - FS	C	C		P		M
UKK 4 - FS / FS	C	C		P		M
UKK 5	C	C		C		M
UKK 5 - DIO	C	C		C		M
UKK 5 - TG	C	C		C		M
UKK 5 -2 -DIO	C	C		C		M
UKK 5 -LA	C	C		C		M
UKKB 3	S	P	M	C		M
UKKB 5	C	C		C		M
UKKB 10	C	C		C		M
UKKB 10 / 2.5	C	C		C		M
UKKB 10 / 2.5 - PE	C	C		C		M
UKN 2.5	C	C		C		M
UKN 4	C	C		P		M
UKN 5	C	C		C		M
UKN 10 (N)	C	C		C		M
UKN 16	C	C		C		M
UKN 16N	C	C		C		M
UKN 35	C	C		C		M
UKSN	C	C		C		M
URK - ND	C	C		C		M
URK - ND 2	C	C		C		M
URKN	C	C		C		M
URKN - A	C	C		C		M
URKN / S	C	C		C		M
URTK - BEN	C	C		C		M
URTK / S	C	C		C		M
URTK / S - BEN	C	C		C		M
URTK / SS	C	C		C		M
URTKD / SP	C	C		C		M
USED 16	C	C		C		M
USED 27	C	C		C		M
USEN 14	C	C		C		M
USEN 18	C	C		C		M
USK / SGSK	C	C		C		M
USK 4 FSR...	C	C		P		M
USLKG 2.5	S	S				M
USLKG 2.5 - N	S	S				M
USLKG 3	S	S				M
USLKG 4	C	C		P		M
USLKG 5	C	C		C		M
USLKG 10 (N)	C	C		C		M
USLKG 16	C	C		C		M
USLKG 16 N	C	C		C		M
USLKG 35	C	C		C		M
USLKG 50	C	C		C		M
USLKG 95	C	C		C		M
UT 4	C	C		P		M
UT 4 BU	C	C		P		M
UT 4 YE	C	C		P		M
UT 4-MTD BU	C	C		P		M
UT 4-MTD-PE	C	C		P		M
UTK 35	C	C		C		M
UXKK 4	C	C		C		M
VBSN 4 FS	C	C				M

1SNC160219S0201

MG3 markers selection guide for other manufacturers' terminal blocks

Phoenix Contact

Size mm	5x10	5x10	5X10	6x10	5x10									
Marker / Terminal block	MG-CPM-03 41291	MG-CPM-04 41390N	MG-CPM-04 41395	MG-CPM-04 41391	MG-CPM-07 41691	STF-04 42804 bracket								
VBST 4 FS / FS	C	C				M								
VIOK 1.5	C	C				M								
VIOK 1.5-2D	C	C				M								
VIOK 1.5-3D/PE	C	C				M								
VIOK 1.5-D/TG/D/PE	C	C				M	M							
VIOK 1.5-LA	C	C				M								
ZFDK 2.5	C	C				M								
ZFDK -PE	C	C				M								
ZFK 2.5 - PE	C	C				M								
ZFK 2.5 - PE / L / N	C	C				M								
ZFK 2.5 - TWIN	C	C				M								
ZFK 2.5 - TWIN - PE	C	C				M								
ZFK 4	C	C		P		M								
ZFK 4 - PE	C	C		P		M								
ZFK 4 - TG	C	C		P		M								
ZFK 6	C	C		C		M								
ZFK 16	C	C		C		M								
ZFK I 4	C	C		C		M								
ZFKK 2.5 (-MT)	C	C		C		M								
ZFKN 4	C	C		C		M								

Schlegel

Size mm	5x10	5X10	6x10	5x10										
Marker / Terminal block	MG-CPM-04 41390N	MG-CPM-04 41395	MG-CPM-04 41391	MG-CPM-07 41691										
IK...	P	P	P	P										

Siemens

Size mm	5x10	5X10	5x10											
Marker / Terminal block	MG-CPM-04 41390N	MG-CPM-06 41591	MG-CPM-07 41691	STF-04 42804 bracket										
8WH...	P		P											
8WA1 011-0DF21		S		M										
8WA1 011-0DG21		S		M										
8WA1 011-1BF23		S		M										
8WA1 011-1DF11		S		M										
8WA1 011-1DG11		S		M										

Siemens

Size mm	5x10	5X10	5x10											
Marker / Terminal block	MG-CPM-04 41390N	MG-CPM-06 41591	MG-CPM-07 41691	STF-04 42804 bracket										
8WA1 011-2DG11		S		M										
8WA1 011-3DF21		S		M										
8WA1 011-3DG21		S		M										
8WA1 011-1DH11		S		M										
8WA1 221		S		M										
8WA1 741-2X		S		M										
8WA2 011-1DF20		S		M										
8WA2 011-1DG20		S												
8WA2 011-1DH20		S												

Wago

Size mm	5x10	5x15	5x7	5x10	5x10	5x10	5x10	4.2x9						
Marker / Terminal block	MG-CPM-01 41090N	MG-CPM-01 41091N	MG-CPM-01 41094	MG-CPM-02 41190N	MG-CPM-03 41291	MG-CPM-03 41293	MG-CPM-04 41390N	MG-CPM-12 46390						
Top-Job 2000			C											
Top-Job 2001			C											
Top-Job 2002	C	S	C	S										
Top-Job 2004	C	C	C	C										
280-520					P	M	C							
280-560					P	M	C							
280-601					P	M	C							
280-607					P	M	C							
280-612					P	M	C							
280-622					P	M	C							
280-626					P	M	C							
280-641					P	M	C							
280-646					P	M	C							
280-649					P	M	C							
280-650					P	M	C							
280-651					P	M	C							
280-653					P	M	C							
280-654					P	M	C							
280-656					P	M	C							
280-671					P	M	C							
280-672					P	M	C							
280-676					P	M	C							
280-681					P	M	C							
280-683					P	M	C							
280-684					P	M	C							
280-685					P	M	C							
280-687					P	M	C							
280-695					P	M	C							
280-830					P	M	C							
280-831					P	M	C							
280-832					P	M	C							
280-833					P	M	C							
280-834					P	M	C							
280-835					P	M	C							

1SNC160219S0201

MG3 markers selection guide for other manufacturers' terminal blocks

Wago

Terminal block \ Marker	MG-CPM-01 41090N	MG-CPM-01 41091N	MG-CPM-01 41094	MG-CPM-02 41190N	MG-CPM-03 41291	MG-CPM-03 41293	MG-CPM-04 41390N	MG-CPM-12 46390
Size mm	5x10	5x15	5x7	5x10	5x10	5x10	5x10	4.2x9
280-836					P	M	C	
280-837					P	M	C	
280-869					P	M	C	
280-870					P	M	C	
280-871					P	M	C	
280-874					P	M	C	
280-875					P	M	C	
280-876					P	M	C	
280-878					P	M	C	
280-880					P	M	C	
280-881					P	M	C	
280-882					P	M	C	
280-883					P	M	C	
280-884					P	M	C	
280-885					P	M	C	
280-901					P	M	C	
280-902					P	M	C	
280-903					P	M	C	
280-904					P	M	C	
280-905					P	M	C	
280-906					P	M	C	
280-907					P	M	C	
280-912					P	M	C	
280-946					P	M	C	
281-601					C		C	
281-604					C		C	
281-607					C		C	
281-631					C		C	
281-652					C		C	
281-653					C		C	
281-654					C		C	
281-657					C		C	
281-659					C		C	
281-660					C		C	
281-663					C		C	
281-664					C		C	
281-666					C		C	
281-668					C		C	
281-678					C		C	
281-679					C		C	
281-681					C		C	
281-683					C		C	
281-684					C		C	
281-685					C		C	
281-686					C		C	
281-687					C		C	
281-901					C		C	
281-902					C		C	
281-903					C		C	
281-904					C		C	
281-905					C		C	
281-906					C		C	
281-907					C		C	
281-912					C		C	
282-601					C		C	
282-604					C		C	
282-607					C		C	
282-681					C		C	
282-682					C		C	

Wago

Terminal block \ Marker	MG-CPM-01 41090N	MG-CPM-01 41091N	MG-CPM-01 41094	MG-CPM-02 41190N	MG-CPM-03 41291	MG-CPM-03 41293	MG-CPM-04 41390N	MG-CPM-12 46390
Size mm	5x10	5x15	5x7	5x10	5x10	5x10	5x10	4.2x9
282-684					C		C	
282-687					C		C	
282-901					C		C	
282-902					C		C	
282-904					C		C	
282-907					C		C	
283-602					C		C	
283-604					C		C	
283-607					C		C	
283-609				C		C		
283-671					C		C	
283-672					C		C	
283-674					C		C	
283-677					C		C	
283-901					C		C	
283-902					C		C	
283-904					C		C	
283-907					C		C	
284-601					C		C	
284-604					C		C	
284-607					C		C	
284-681					C		C	
284-682					C		C	
284-684					C		C	
284-687					C		C	
284-901					C		C	
284-902					C		C	
284-904					C		C	
284-907					C		C	
285-601					C		C	
285-605					C		C	
290-681					P	M	C	
750-xxx	S	S	C	S				
769-237	S	S	C	S				
769-176	C							
870-501	S		C	S				
870-507	S		C	S				
870-531	S		C	S				
870-538	S		C	S				
870-551	S		C	S				
870-567	S		C	S				
870-831	S		C	S				
870-901	S		C	S				
880-901	S		C	S	P	M	S	
AKZ 4../ AKB 4...	C	C	C	C	M			
DLA 2.5	C	C	C	C	M			
DLD 2.5	C	C	C	C	M			
DLI 2.5	C	C	C	C	M			
EK 2.5	C	C	C	C	M			
EK 6	CP	CP	CP	CP	M			
EK 10	C	C	C	C	M			
EK 16	C	C	C	C	M			
EK 35	C	C	C	C	M			
EW15	C	C	C	C	M			
EW35	C	C	C	C	M			
EWK1	C	C	C	C	M			
EWK2	C	C	C	C	M			
IAK 1.5N 3L	S	S	S	S	M			
IDK 1.5	S		S	S	M			

1SNC160219S0201

MG3 markers selection guide for other manufacturers' terminal blocks

Wago

Size mm	5x10	5x15	5x7	5x10	5x10	5x10	5x10	4.2x9
Marker / Terminal block	MG-CPM-01 41090N	MG-CPM-01 41091N	MG-CPM-01 41094	MG-CPM-02 41190N	MG-CPM-03 41291	MG-CPM-03 41293	MG-CPM-04 41390N	MG-CPM-12 46390
IDK 1.5N	S	S	S	S	M			
IDK 1.5N/V	S	S	S	S	M			
IDU 1.5N	S	S	S	S	M			
IDU 2.5N	C	C	C	C	M			
IEK 1.5N	S		S	S	M			
IIK 1.5N	S		S	S	M			
IPE 1.5N	S		S	S	M			

Weidmüller

Size mm	5x10	5x15	5x7	5x10
Marker / Terminal block	MG-CPM-01 41090N	MG-CPM-01 41091N	MG-CPM-01 41094	MG-CPM-02 41190N
AKZ 4../ AKB 4...	C	C	C	C
DLA 2.5	P	C	C	C
DLD 2.5	P	C	C	C
DLI 2.5	P	C	C	C
EK 2.5	C	C	C	C
EK 6	CP	CP	CP	CP
EK 10	C	C	C	C
EK 16	C	C	C	C
EK 35	C	C	C	C
EW15	C	C	C	C
EW35	C	C	C	C
EWK1	C	C	C	C
EWK2	C	C	C	C
IAK 1.5N 3L	S	S	S	S
IDK 1.5	S		S	S
IDK 1.5N	S	S	S	S
IDK 1.5N/V	S	S	S	S
IDU 1.5N	S	S	S	S
IDU 2.5N	P	C	C	C
IEK 1.5N	S		S	S
IIK 1.5N	S		S	S
IPE 1.5N	S		S	S
IPE 2.5N	C		C	C
ITR 1.5N	S		S	S
MAK 2.5	P	C	C	C
Mak 2.5/VLI 1.5	P	C	C	C
NT 4	C	C	C	C
NT 6	CP	CP	CP	CP
NT 10	C	C	C	C
NT 16	C	C	C	C
SAI-M16 / M23 in SAI-M8	C	C	C	C
SAK 2.5	P	C	C	C
SAK 4	C	C	C	C
SAK 6	CP	CP	CP	CP
SAK 10 (PA)	C	C	C	C
SAK 16	C	C	C	C

Weidmüller

Size mm	5x10	5x15	5x7	5x10
Marker / Terminal block	MG-CPM-01 41090N	MG-CPM-01 41091N	MG-CPM-01 41094	MG-CPM-02 41190N
SAK 35	C	C	C	C
SAK 70	C	C	C	C
SAK 95	C	C	C	C
SAKA 10	C	C	C	C
SAKB 10	C	C	C	C
SAKC 4	C	C	C	C
SAKC 10	C	C	C	C
SAKD 2.5 N	P	S	S	S
SAKG 28	C	C	C	C
SAKG 32	C	C	C	C
SAKG 40	C	C	C	C
SAKG 46	C	C	C	C
SAKG 54	C	C	C	C
SAKG 70	C	C	C	C
SAKR	C	C	C	C
SAKRD	C	C	C	C
SAKS 1	C	C	C	C
SAKS 2	C	C	C	C
SAKS 3	C	C	C	C
SAKS 4	C	C	C	C
SAKS 5	C	C	C	C
SAKT 1	CP	CP	CP	CP
SAKT 2	CP	CP	CP	CP
SAKT 4	C	C	C	C
SS 6	C	C	C	C
SS 8	C	C	C	C
SS 10	C	C	C	C
SS 12	C	C	C	C
TOP 2.5	P	C	C	C
TOP 4	C	C	C	C
VLI 2.5	P	C	C	C
WDK 2.5	P	S	S	S
WDK 2.5 800V	P	C	C	C
WDK 2.5N	P	S	S	S
WDK 4N	C	C	C	C
WDL 2.5	P	C	C	C
WDL 2.5 / S	P	C	C	C
WDT 1.5	C	C	C	C
WDTR 2.5	P	C	C	C
WDU 1.5	S	S	S	S
WDU 1.5 BLA	S	S	S	S
WDU 1.5 LD/BLA	S	S	S	S
WDU 1.5/BLZ 5.08	S	S	S	S
WDU 1.5/BLZ R7.62	S	S	S	S
WDU 1.5/BLZ/LD/5.08	S	S	S	S
WDU 1.5ZZ	S	S	S	S
WDU 2.5	P	S	S	S
WDU 2.5 F	P	S	S	S
WDU 2.5 FF	P	S	S	S
WDU 2.5 N	P	S	S	S
WDU 2.5 TC	P	S	S	S
WDU 2.5/1.5/ZZ	P	S	S	S
WDU 4	C	C	C	C
WDU 4N	C	C	C	C
WDU 6	C	C	C	C
WDU 10	C	C	C	C
WDU 10SL	C	C	C	C
WDU 16	C	C	C	C
WDU 35 N	C	C	C	C

1SNC160219S0201

MG3 markers selection guide for other manufacturers' terminal blocks

Weidmüller

Size mm	5x10	5x15	5x7	5x10
Marker / Terminal block	MG-CPM-01 41090N	MG-CPM-01 41091N	MG-CPM-01 41094	MG-CPM-02 41190N
WDU 70/95	C	C	C	C
WDU 95N	C	C	C	C
WDU 120/150	C	C	C	C
WDU 240	C	C	C	C
WFF 35	C	C	C	C
WFF 70	C	C	C	C
WFF 120	C	C	C	C
WFF 185	C	C	C	C
WFF 300	C	C	C	C
WIN BLOCK	C	C	C	C
WNT 2.5	P	S	S	S
WNT 4	C	C	C	C
WNT 6	C	C	C	C
WNT 10	C	C	C	C
WPE 1.5	S	S	S	S
WPE 1.5/ZZ	S	S	S	S
WPE 2.5	P	S	S	S
WPE 2.5/1.5/ZR	P	C	C	C
WPE 4	C	C	C	C
WPE 6	C	C	C	C
WPE 10	C	C	C	C
WPE 16	C	C	C	C
WPE 35	C	C	C	C
WSI 6	C	C	C	C
WSI 6/2	C	C	C	C
WTL 6/1	C	C	C	C
WTL 6/2	CP	CP	CP	CP
WTR 2.5	P	C	C	C
ZBLD 2.5/1.5	P		C	C
ZDK 2.5/1.5	P		C	C
ZDK 2.5/1.5 DU-PE	P		C	C
ZDK 2.5/1.5 N-PE	P		C	C
ZDK 2.5/1.5 V / E	P		C	C
ZDK 2.5/1.5/E	P		C	C
ZDK 2.5/1.5/E BL	P		C	C
ZDK 2.5/1.5/LD/1	P		C	C
ZDK 2.5/1.5/LD/2	P		C	C
ZDK 2.5/1.5/N-PE/E	P		C	C
ZDK 2.5/1.5D1...6	P		C	C
ZDK 2.5/1.5N-DU	P		C	C
ZDK 2.5/1.5N-DU/E	P		C	C
ZDK 2.5/1.5N-DU-PE/E	P		C	C
ZDK 2.5/1.5PE	P		C	C
ZDK 2.5/1.5V	P		C	C
ZDKB	C		C	C
ZDKS	C		C	C
ZDLD 2.5 / 1.5	P		C	C
ZDLD 2.5 / 1.5 V	P		C	C
ZDU 2.5 2.5/10	P	C	C	C
ZDU 2.5/2x2AN	P		C	C
ZDU 2.5/2x2AN (/E) BL	P		C	C
ZDU 2.5/2x2AN/10	P		C	C
ZDU 2.5/2x2AN/D	P		C	C
ZDU 2.5/2x2AN/E	P		C	C
ZDU 2.5/2x2AN/LD	P		C	C
ZDU 2.5/3AN	P	C	C	C
ZDU 2.5/3AN (/E) BL	P		C	C
ZDU 2.5/3AN/10	P		C	C
ZDU 2.5/3AN/E	P		C	C

Weidmüller

Size mm	5x10	5x15	5x7	5x10
Marker / Terminal block	MG-CPM-01 41090N	MG-CPM-01 41091N	MG-CPM-01 41094	MG-CPM-02 41190N
ZDU 2.5/4AN	P	C	C	C
ZDU 2.5/4AN (/E) BL	P		C	C
ZDU 2.5/4AN/10	P		C	C
ZDU 2.5-2/3	P		C	C
ZDU 2.5-2/3AN (/E) BL	P		C	C
ZDU 2.5-2/4AN (/E)	P		C	C
ZDU 2.5-2/3AN (/E) BL	C		C	C
ZDU 2.5-2/4AN (/E)	C		C	C
ZDU 2.5-2/4AN (/E) BL	P		C	C
ZDU 2.5 (/E)	P		C	C
ZDU 2.5 (/E) BL	P		C	C
ZDU 2.5-2	P		C	C
ZDU 4	C		C	C
ZDU 6	CP		CP	CP
ZDU 10 NT	C		C	C
ZDU 16 16/3AN	C		C	C
ZDU 35	C		C	C
ZDUA 2.5-2 (/E)	P		C	C
ZDUA 2.5-2 (/E) BL	P		C	C
ZDUB 2.5 / 2-2/4AN	P		C	C
ZDUB 2.5 / 2AN	P		C	C
ZDUB 2.5-2/2AN	P		C	C
ZIA 1.5/....	C	C	C	C
ZK3S	C		C	C
ZKB	C		C	C
ZKS	C		C	C
ZPE 2.5/4AN	P	C	C	C
ZPE 2.5	P		C	C
ZPE 2.5/3AN	P		C	C
ZPE 2.5/3AN/E	P		C	C
ZPE 2.5/4AN	P		C	C
ZPE 2.5/4AN/E	P		C	C
ZPE 2.5/E	P		C	C
ZPE 2.5-2 (/E)	P		C	C
ZPE 2.5-2/3AN	P	C	C	C
ZPE 2.5-2/3AN/E	P		C	C
ZPE 2.5-2/4AN	P		C	C
ZPE 35	C		C	C
ZPEA -2/E	C		C	C
ZRV 1.5	C		C	C
ZRV 1.5PE	C		C	C
ZSI 2.5	P		C	C
ZSI 2.5/2	P		C	C
ZSLD 2.5/1.5	P		C	C
ZTR 2.5	P	C	C	C
ZTR 2.5 D	P	C	C	C
ZTR 2.5/3AN	P		C	C
ZVL 1.5	C	C	C	C

1SNC160219S0201

MG3 markers selection guide for other manufacturers' terminal blocks

Wieland

Size mm	5x10	5x10	
Marker / Terminal block	MG-CPM-05 41490	MG-CPM-05 41494	STF-05 42805 bracket
WT 2,5	P	M	M
WT 4	C	C	M
WT 6	C	C	M
WT 10	C	C	M
WT 16	C	C	M
WTP 2,5/4	P	M	M
WTP 6/10	C	C	M
WK 2,5/ U	P	M	M
WK 4/ U	C	C	M
WK 6/ U	C	C	M
WK 8/ U	C	C	M
WK 10/ U	C	C	M
WK 25/ U	C	C	M
WK 35/ U	C	C	M

Woertz

Size mm	3X10	5x10	5x10	5x7
Marker / Terminal block	MG-CPM-01 41092	MG-CPM-01 41090N	MG-CPM-02 41190N	MG-CPM-01 41094
30544 / 4 V	C	C	C	C
30544 / 6 V	C	C	C	C
30544 / 10 V	C	CP	CP	CP
30800	C	C	C	C
30840	C	C	C	C
30841	C	C	C	C
30842	C	C	C	C
30843	C	C	C	C
30844	C	C	C	C

1SNC160219S0201

HTP500 markers selection guide for other manufacturers' terminal blocks

Terminal block

Terminal block markers are available in versions to suit the particular terminal block formats of the most widely used products, see selection guide to side.

Depending on type, markers are presented as joined strips at a set or as separate markers for convenient individual insertion on mixed spacing terminal block assemblies.

Markers

Strip markers

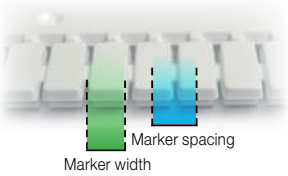

Individual markers

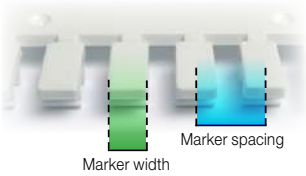

S - Strip mounting

Marker spacing = Terminal block spacing

I - Individual mounting

Marker spacing ≠ Terminal block spacing

T - Top mounting

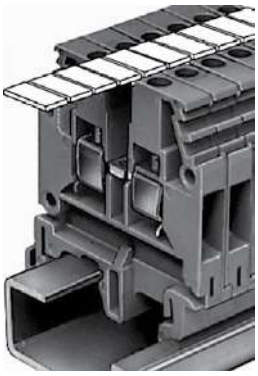

1SNC160220S0201

HTP500 markers selection guide for other manufacturers' terminal blocks

Terminal block \ Marker	RCW510 - 1SNA235096R1700	RCP510 - 1SNA235095R1600	RCL510 - 1SNA235097R1000		
Size mm	5x10	5x10	5x10		
Arnocanali					
CTS2,5UN		I			
CTS4UN		I			
CTS6U		I			
CTS10U		I			
CTS16U		I			
CTS35U		I			
CSCG2,5T		I			
CSCG4T		I			
CSCG6T		I			
CSCG10T		I			
CSFL4U		I			
CSC2,5T		I			
CSC4T		I			
CSC6T		I			
CSC10T		I			
CA702		I			
CA802		I			
CGT4N		I			
CGT6N		I			
CGT4U		I			
CGT10U		I			
CGT35U		I			
Entrelec					
M2.5/5		I			
M4/6		I			
Contaclip					
RK 2,5	S				
RK 2,5/35	S				
RK 2,54	I				
RKD 2,5	S				
RKD 2,5/35	S				
RKD 4	I				
RK 4...RK 240	I				
SRK 2,5/15	S				
SRK 2,5	S				
IK 2,5	S				
IKD 2,5	S				
BKA 2,5	S				
KBL 2,5	S				
SL 4...SL 35	I				
TSK...	I				
FF...	I				
STK...	I				
SIK...	I				
PTK...	I				
TRK...	I				
ES...	I				
EH...	I				
ZSRK2,5...	S				
ZRK2,5...	S				
ZSLN 2,5	S				
ZSL 2,5	S				
ZIKD 2,5...	S				
ZSLD 2,5...	S				

Terminal block \ Marker	RCW510 - 1SNA235096R1700	RCP510 - 1SNA235095R1600	RCL510 - 1SNA235097R1000		
Size mm	5x10	5x10	5x10		
Contaclip (cont.)					
ZRKD 2,5...	S				
ZTRK 2,5...	S				
ZIZA 1,5...	S				
ZRK 4...ZRK 16	I				
ZSL 4...ZSL 16	I				
FRK 2,5...	S				
FSL 2,5...	S				
FRKD 2,5...	S				
FDLIS	S				
FRK 4	I				
FSL4	I				
Klemsan					
AVK 2,5	S				
AVK 4	I				
AVK 6	I				
AVK 10	I				
Legrand					
10A			I		
20A			I		
25A			S		
35A			I		
50A			I		
70A			I		
396,2857143			S		
390 81			S		
Phoenix					
ST 2,5		ST			
ST 4		IT			
ST 6		IT			
UT 2,5		S			
UT 4		I			
UT 6		I			
UK 2,5		S			
UK 3		I			
UK 5		I			
UK 5N		I			
UKK 3		S			
UKK 5		I			
PIK 4PE/L/NL		I			
PIK 4L/L		I			
Rockwell Automation					
1492 K3	I				
1492 J3	S				
1492 L3	S				
1492 J4	I				
1492 JD3C	S				
Siemens					
8WH2		IT			
8WH3		IT			
8WH4		IT			
8WH5		IT			

Terminal block \ Marker	RCW510 - 1SNA235096R1700	RCP510 - 1SNA235095R1600	RCL510 - 1SNA235097R1000		
Size mm	5x10	5x10	5x10		
Staffel					
TAC 10	I				
Télémécanique					
AB1RR435U2			S		
WK 4SL/U			I		
WK 4E/U			S		
WK 4/THSI5			I		
WK 4/U			S		
WK 6SL/U			I		
WK 10/SIU			I		
WKN 16/U			I		
Wago					
280		I			
281		I			
282		I			
283		I			
284		I			
290		I			
Weidmüller					
SAK 2,5	I				
SAK 4	I				
SAK 6	I				
WDU 1,5	I				
WDU 2,5	S				
WDU 4	I				
WDU 6	I				
WDU 10	I				
WDU 35	I				
ZDU 2,5	S				
ZDU 6	I				
WSI 6	I				
WTR 2,5	S				
WPE 2,5	S				
WPE 4	I				
ZPE 2,5	S				
WNT 2,5	S				
WDK 2,5	S				
WDK 4	I				
Woertz					
30301			S		
30145			I		
30150			I		
3450			S		
3430			S		

I = individual mounting
S = strip mounting
T = top mounting

6

1SNC160220S0201

Index
Part Number classification

Part Number	Type	Page
1SFA616920R8120	KA1-8120	35
1SNA103115R1300	RTM7	154
1SNA103116R1400	RTM7	154
1SNA103775R0000	RC65	86
1SNA103776R0100	RC65	86
1SNA103890R2100	RC510-YL	85
1SNA103922R1400	RTM7	154
1SNA107033R1000	EPU5	156
1SNA107038R2500	EPU6	156
1SNA113077R1100	PEB	31
1SNA113084R0100	PEBM	31
1SNA113180R1200	PEV	89
1SNA163007R2600	RPEH	95
1SNA163155R2600	REH3	91
1SNA163167R2200	REH3	155
1SNA163211R2600	PEH	95
1SNA163427R1700	EP6	157
1SNA163428R2000	EP8	157
1SNA163429R2100	EP10	157
1SNA163430R2600	EP12	157
1SNA163431R1300	EP16	157
1SNA163432R1400	VSP12	157
1SNA163433R1500	VSP6	157
1SNA164602R0000	RTM9	90
1SNA164695R2500	REH3	155
1SNA168410R0700	RTM7	90
1SNA168737R0200	PETC 51	103
1SNA168741R1600	PETC 53	103
1SNA168747R1400	PETC 56	103
1SNA173147R2000	VSP16	157
1SNA173178R0700	RPEV	89
1SNA173327R2400	EP223	157
1SNA173328R0500	EP224	157
1SNA173812R1300	PIB	96
1SNA178430R0500	RCPEB	96
1SNA178431R2200	EPR1	31
1SNA206103R0700	VSP68	157
1SNA206230R1100	RC610	85
1SNA206231R0600	RC610	85
1SNA206232R0700	RC610	85
1SNA206233R0000	RC610	85
1SNA206234R0100	RC610	85
1SNA206235R0200	RC610	85
1SNA229000R1500	RC410	85
1SNA229001R0200	RC410	126
1SNA229002R0300	RC410	126
1SNA229003R0400	RC410	126
1SNA229004R0500	RC410	126
1SNA229005R0600	RC410	126
1SNA229006R0700	RC410	126
1SNA229007R0000	RC410	126
1SNA229008R1100	RC410	126
1SNA229009R1200	RC410	126
1SNA229010R0600	RC410	126
1SNA229011R2300	RC410	126
1SNA229030R0200	RC410	126
1SNA229040R1400	RC410	128
1SNA229041R0100	RC410	128
1SNA229042R0200	RC410	128
1SNA229043R0300	RC410	128
1SNA229044R0400	RC410	128
1SNA229045R0500	RC410	128
1SNA229046R0600	RC410	128
1SNA229047R0700	RC410	128
1SNA229048R1000	RC410	128
1SNA229049R1100	RC410	128
1SNA229050R1600	RC410	128
1SNA229051R0300	RC410	128
1SNA229052R0400	RC410	128
1SNA229053R0500	RC410	128
1SNA229054R0600	RC410	128
1SNA229055R0700	RC410	128
1SNA229056R0000	RC410	128
1SNA229057R0100	RC410	128
1SNA229058R1200	RC410	128
1SNA229059R1300	RC410	128
1SNA229060R1000	RC410	128
1SNA229061R0500	RC410	128
1SNA229062R0600	RC410	128
1SNA229063R0700	RC410	128
1SNA229064R0000	RC410	128
1SNA229065R0100	RC410	128
1SNA229066R0200	RC410	128
1SNA229067R0300	RC410	128
1SNA229068R1400	RC410	128
1SNA229069R1500	RC410	128
1SNA229072R0000	RC410	128
1SNA229111R2400	RC410	127
1SNA229112R2500	RC410	127
1SNA229113R2600	RC410	127
1SNA229114R2700	RC410	127
1SNA229115R2000	RC410	127
1SNA229150R1700	RC410	127
1SNA229151R0400	RC410	127
1SNA229152R0500	RC410	127
1SNA229153R0600	RC410	127
1SNA229154R0700	RC410	127
1SNA229155R0000	RC410	127
1SNA229156R0100	RC410	127
1SNA229157R0200	RC410	127
1SNA229158R1300	RC410	127
1SNA229159R1400	RC410	127
1SNA229160R1100	RC410	127
1SNA229161R0600	RC410	127
1SNA229162R0700	RC410	127
1SNA229163R0000	RC410	127
1SNA229164R0100	RC410	127
1SNA229165R0200	RC410	127
1SNA229166R0300	RC410	127
1SNA229167R0400	RC410	127
1SNA229168R1500	RC410	127
1SNA229169R1600	RC410	127
1SNA229170R1300	RC410	127
1SNA229171R0000	RC410	127
1SNA229172R0100	RC410	127
1SNA229173R0200	RC410	127
1SNA229174R0300	RC410	127
1SNA229175R0400	RC410	127
1SNA229180R0600	RC410	129
1SNA229181R2300	RC410	129
1SNA229182R2400	RC410	129
1SNA229183R2500	RC410	129
1SNA229184R2600	RC410	129
1SNA229185R2700	RC410	129
1SNA229186R2000	RC410	129
1SNA229187R2100	RC410	129
1SNA229188R0200	RC410	129
1SNA229189R0300	RC410	129
1SNA229190R0000	RC410	129
1SNA229191R2500	RC410	129
1SNA229192R2600	RC410	129
1SNA229193R2700	RC410	129
1SNA229194R2000	RC410	129
1SNA229195R2100	RC410	129
1SNA229196R2200	RC410	129
1SNA229197R2300	RC410	129
1SNA229198R0400	RC410	129
1SNA229199R0500	RC410	129
1SNA229200R2200	RC410	129
1SNA229201R1700	RC410	129
1SNA229202R1000	RC410	129
1SNA229203R1100	RC410	129
1SNA229204R1200	RC410	129
1SNA229205R1300	RC410	129
1SNA229210R1300	RC410	126
1SNA229211R0000	RC410	126
1SNA229212R0100	RC410	126
1SNA229213R0200	RC410	126
1SNA229214R0300	RC410	126
1SNA229215R0400	RC410	126
1SNA229216R0500	RC410	126
1SNA229217R0600	RC410	126
1SNA229218R1700	RC410	126
1SNA229220R1500	RC410	126
1SNA229221R0200	RC410	126
1SNA229222R0300	RC410	126
1SNA229223R0400	RC410	126
1SNA229224R0500	RC410	126
1SNA229225R0600	RC410	126
1SNA229226R0700	RC410	126
1SNA229227R0000	RC410	126
1SNA229228R1100	RC410	126
1SNA229229R1200	RC410	126
1SNA229230R1700	RC410	126
1SNA230000R1200	RC55	86
1SNA230001R0700	RC55	144
1SNA230002R0000	RC55	144
1SNA230003R0100	RC55	144
1SNA230004R0200	RC55	144
1SNA230005R0300	RC55	144
1SNA230006R0400	RC55	144
1SNA230007R0500	RC55	144
1SNA230008R1600	RC55	144
1SNA230009R1700	RC55	144
1SNA230010R0300	RC55	144
1SNA230011R2000	RC55	144
1SNA230012R2100	RC55	144
1SNA230013R2200	RC55	144
1SNA230014R2300	RC55	144
1SNA230015R2400	RC55	144
1SNA230016R2500	RC55	144
1SNA230017R2600	RC55	144
1SNA230018R0700	RC55	144
1SNA230019R0000	RC55	144
1SNA230020R0500	RC55	144
1SNA230021R2200	RC55	144
1SNA230030R0700	RC55	144
1SNA230031R2400	RC55	144
1SNA230032R2500	RC55	144
1SNA230033R2600	RC55	144
1SNA230034R2700	RC55	144
1SNA230035R2000	RC55	144
1SNA230036R2100	RC55	144
1SNA230037R2200	RC55	144
1SNA230038R0300	RC55	144
1SNA230039R0400	RC55	144
1SNA230040R1100	RC55	146
1SNA230041R0600	RC55	146
1SNA230042R0700	RC55	146
1SNA230043R0000	RC55	146
1SNA230044R0100	RC55	146
1SNA230045R0200	RC55	146
1SNA230046R0300	RC55	146
1SNA230047R0400	RC55	146
1SNA230048R1500	RC55	146
1SNA230049R1600	RC55	146
1SNA230050R1300	RC55	146
1SNA230051R0000	RC55	146
1SNA230052R0100	RC55	146
1SNA230053R0200	RC55	146
1SNA230054R0300	RC55	146
1SNA230055R0400	RC55	146
1SNA230056R0500	RC55	146
1SNA230057R0600	RC55	146
1SNA230058R1700	RC55	146
1SNA230059R1000	RC55	146
1SNA230060R1500	RC55	146
1SNA230061R0200	RC55	146
1SNA230062R0300	RC55	146
1SNA230063R0400	RC55	146
1SNA230064R0500	RC55	146
1SNA230065R0600	RC55	146
1SNA230066R0700	RC55	146
1SNA230067R0000	RC55	146
1SNA230068R1100	RC55	146
1SNA230069R1200	RC55	146
1SNA230072R0500	RC55	146
1SNA230111R2100	RC55	145
1SNA230112R2200	RC55	145
1SNA230113R2300	RC55	145
1SNA230114R2400	RC55	145
1SNA230115R2500	RC55	145
1SNA230116R2600	RC55	145
1SNA230117R2700	RC55	145
1SNA230118R0000	RC55	145
1SNA230119R0100	RC55	145
1SNA230131R2500	RC55	145
1SNA230150R1400	RC55	145
1SNA230151R0100	RC55	145
1SNA230152R0200	RC55	145
1SNA230153R0300	RC55	145
1SNA230154R0400	RC55	145
1SNA230155R0500	RC55	145
1SNA230156R0600	RC55	145
1SNA230157R0700	RC55	145
1SNA230158R1000	RC55	145
1SNA230159R1100	RC55	145
1SNA230160R1600	RC55	145
1SNA230161R0300	RC55	145
1SNA230162R0400	RC55	145
1SNA230163R0500	RC55	145
1SNA230164R0600	RC55	145
1SNA230165R0700	RC55	145
1SNA230166R0000	RC55	145
1SNA230167R0100	RC55	145
1SNA230168R1200	RC55	145
1SNA230169R1300	RC55	145
1SNA230170R1000	RC55	145
1SNA230171R0500	RC55	145
1SNA230172R0600	RC55	145
1SNA230173R0700	RC55	145
1SNA230174R0000	RC55	145
1SNA230175R0100	RC55	145
1SNA230180R0300	RC55	146
1SNA230181R2000	RC55	146
1SNA230182R2100	RC55	146
1SNA230183R2200	RC55	146
1SNA230184R2300	RC55	146
1SNA230185R2400	RC55	146
1SNA230186R2500	RC55	146
1SNA230187R2600	RC55	146
1SNA230188R0700	RC55	146
1SNA230189R0000	RC55	146
1SNA230190R0500	RC55	146
1SNA230191R2200	RC55	146
1SNA230192R2300	RC55	146
1SNA230193R2400	RC55	146
1SNA230194R2500	RC55	146
1SNA230195R2600	RC55	146
1SNA230196R2700	RC55	146
1SNA230197R2000	RC55	146
1SNA230198R0100	RC55	146
1SNA230199R0200	RC55	146
1SNA230200R2700	RC55	146
1SNA230201R1400	RC55	146

Index

Part Number classification

Part Number	Type	Page
1SNA230202R1500	RC55	146
1SNA230203R1600	RC55	146
1SNA230204R1700	RC55	146
1SNA230205R1000	RC55	146
1SNA230240R2600	RC55	144
1SNA230241R1300	RC55	144
1SNA230242R1400	RC55	144
1SNA230243R1500	RC55	144
1SNA230244R1600	RC55	144
1SNA230245R1700	RC55	144
1SNA230246R1000	RC55	144
1SNA230247R1100	RC55	144
1SNA230248R2200	RC55	144
1SNA230250R2000	RC55	144
1SNA230251R1500	RC55	144
1SNA230252R1600	RC55	144
1SNA230253R1700	RC55	144
1SNA230254R1000	RC55	144
1SNA230255R1100	RC55	144
1SNA230256R1200	RC55	144
1SNA230257R1300	RC55	144
1SNA230258R2400	RC55	144
1SNA230259R2500	RC55	144
1SNA230260R2200	RC55	144
1SNA231000R0700	RC510	85
1SNA231001R2400	RC510	130
1SNA231002R2500	RC510	130
1SNA231003R2600	RC510	130
1SNA231004R2700	RC510	130
1SNA231005R2000	RC510	130
1SNA231006R2100	RC510	130
1SNA231007R2200	RC510	130
1SNA231008R0300	RC510	130
1SNA231009R0400	RC510	130
1SNA231010R2000	RC510	130
1SNA231011R1500	RC510	130
1SNA231012R1600	RC510	130
1SNA231013R1700	RC510	130
1SNA231014R1000	RC510	130
1SNA231015R1100	RC510	130
1SNA231016R1200	RC510	130
1SNA231017R1300	RC510	130
1SNA231018R2400	RC510	130
1SNA231019R2500	RC510	130
1SNA231020R2200	RC510	130
1SNA231021R1700	RC510	130
1SNA231030R2400	RC510	130
1SNA231031R1100	RC510	130
1SNA231032R1200	RC510	130
1SNA231033R1300	RC510	130
1SNA231034R1400	RC510	130
1SNA231035R1500	RC510	130
1SNA231036R1600	RC510	130
1SNA231037R1700	RC510	130
1SNA231038R2000	RC510	130
1SNA231039R2100	RC510	130
1SNA231040R0600	RC510	132
1SNA231041R2300	RC510	132
1SNA231042R2400	RC510	132
1SNA231043R2500	RC510	132
1SNA231044R2600	RC510	132
1SNA231045R2700	RC510	132
1SNA231046R2000	RC510	132
1SNA231047R2100	RC510	132
1SNA231048R0200	RC510	132
1SNA231049R0300	RC510	132
1SNA231050R0000	RC510	132
1SNA231051R2500	RC510	132
1SNA231052R2600	RC510	132
1SNA231053R2700	RC510	132
1SNA231054R2000	RC510	132
1SNA231055R2100	RC510	132
1SNA231056R2200	RC510	132
1SNA231057R2300	RC510	132
1SNA231058R0400	RC510	132
1SNA231059R0500	RC510	132
1SNA231060R0200	RC510	132
1SNA231061R2700	RC510	132
1SNA231062R2000	RC510	132
1SNA231063R2100	RC510	132
1SNA231064R2200	RC510	132
1SNA231065R2300	RC510	132
1SNA231066R2400	RC510	132
1SNA231067R2500	RC510	132
1SNA231068R0600	RC510	132
1SNA231069R0700	RC510	132
1SNA231072R2200	RC510	132
1SNA231111R1600	RC510	131
1SNA231112R1700	RC510	131
1SNA231113R1000	RC510	131
1SNA231114R1100	RC510	131
1SNA231115R1200	RC510	131
1SNA231116R1300	RC510	131
1SNA231117R1400	RC510	131
1SNA231118R2500	RC510	131
1SNA231119R2600	RC510	131
1SNA231131R1200	RC510	131
1SNA231133R1400	RC510	132
1SNA231134R1500	RC510	132
1SNA231135R1600	RC510	132
1SNA231136R1700	RC510	132
1SNA231137R1000	RC510	132
1SNA231150R0100	RC510	131
1SNA231151R2600	RC510	131
1SNA231152R2700	RC510	131
1SNA231153R2000	RC510	131
1SNA231154R2100	RC510	131
1SNA231155R2200	RC510	131
1SNA231156R2300	RC510	131
1SNA231157R2400	RC510	131
1SNA231158R0500	RC510	131
1SNA231159R0600	RC510	131
1SNA231160R0300	RC510	131
1SNA231161R2000	RC510	131
1SNA231162R2100	RC510	131
1SNA231163R2200	RC510	131
1SNA231164R2300	RC510	131
1SNA231165R2400	RC510	131
1SNA231166R2500	RC510	131
1SNA231167R2600	RC510	131
1SNA231168R0700	RC510	131
1SNA231169R0000	RC510	131
1SNA231170R0500	RC510	131
1SNA231171R2200	RC510	131
1SNA231172R2300	RC510	131
1SNA231173R2400	RC510	131
1SNA231174R2500	RC510	131
1SNA231175R2600	RC510	131
1SNA231180R2000	RC510	133
1SNA231181R1500	RC510	133
1SNA231182R1600	RC510	133
1SNA231183R1700	RC510	133
1SNA231184R1000	RC510	133
1SNA231185R1100	RC510	133
1SNA231186R1200	RC510	133
1SNA231187R1300	RC510	133
1SNA231188R2400	RC510	133
1SNA231189R2500	RC510	133
1SNA231190R2200	RC510	133
1SNA231191R1700	RC510	133
1SNA231192R1000	RC510	133
1SNA231193R1100	RC510	133
1SNA231194R1200	RC510	133
1SNA231195R1300	RC510	133
1SNA231196R1400	RC510	133
1SNA231197R1500	RC510	133
1SNA231198R2600	RC510	133
1SNA231199R2700	RC510	133
1SNA231200R1400	RC510	133
1SNA231201R0100	RC510	133
1SNA231202R0200	RC510	133
1SNA231203R0300	RC510	133
1SNA231204R0400	RC510	133
1SNA231205R0500	RC510	133
1SNA231210R0500	RC510	130
1SNA231211R2200	RC510	130
1SNA231212R2300	RC510	130
1SNA231213R2400	RC510	130
1SNA231214R2500	RC510	130
1SNA231215R2600	RC510	130
1SNA231216R2700	RC510	130
1SNA231217R2000	RC510	130
1SNA231218R0100	RC510	130
1SNA231220R0700	RC510	130
1SNA231221R2400	RC510	130
1SNA231222R2500	RC510	130
1SNA231223R2600	RC510	130
1SNA231224R2700	RC510	130
1SNA231225R2000	RC510	130
1SNA231226R2100	RC510	130
1SNA231227R2200	RC510	130
1SNA231228R0300	RC510	130
1SNA231229R0400	RC510	130
1SNA231230R0100	RC510	130
1SNA231600R1500	RC510TT	17
1SNA231700R1100	RC510TT-YL	17
1SNA232000R0000	RC65	86
1SNA232001R2500	RC65	147
1SNA232002R2600	RC65	147
1SNA232003R2700	RC65	147
1SNA232004R2000	RC65	147
1SNA232005R2100	RC65	147
1SNA232006R2200	RC65	147
1SNA232007R2300	RC65	147
1SNA232008R0400	RC65	147
1SNA232009R0500	RC65	147
1SNA232010R2100	RC65	147
1SNA232011R1600	RC65	147
1SNA232012R1700	RC65	147
1SNA232013R1000	RC65	147
1SNA232014R1100	RC65	147
1SNA232015R1200	RC65	147
1SNA232016R1300	RC65	147
1SNA232017R1400	RC65	147
1SNA232018R2500	RC65	147
1SNA232019R2600	RC65	147
1SNA232020R2300	RC65	147
1SNA232021R1000	RC65	147
1SNA232030R2500	RC65	147
1SNA232031R1200	RC65	147
1SNA232032R1300	RC65	147
1SNA232033R1400	RC65	147
1SNA232034R1500	RC65	147
1SNA232035R1600	RC65	147
1SNA232036R1700	RC65	147
1SNA232037R1000	RC65	147
1SNA232038R2100	RC65	147
1SNA232039R2200	RC65	147
1SNA232040R0700	RC65	149
1SNA232041R2400	RC65	149
1SNA232042R2500	RC65	149
1SNA232043R2600	RC65	149
1SNA232044R2700	RC65	149
1SNA232045R2000	RC65	149
1SNA232046R2100	RC65	149
1SNA232047R2200	RC65	149
1SNA232048R0300	RC65	149
1SNA232049R0400	RC65	149
1SNA232050R0100	RC65	149
1SNA232051R2600	RC65	149
1SNA232052R2700	RC65	149
1SNA232053R2000	RC65	149
1SNA232054R2100	RC65	149
1SNA232055R2200	RC65	149
1SNA232056R2300	RC65	149
1SNA232057R2400	RC65	149
1SNA232058R0500	RC65	149
1SNA232059R0600	RC65	149
1SNA232060R0300	RC65	149
1SNA232061R2000	RC65	149
1SNA232062R2100	RC65	149
1SNA232063R2200	RC65	149
1SNA232064R2300	RC65	149
1SNA232065R2400	RC65	149
1SNA232066R2500	RC65	149
1SNA232067R2600	RC65	149
1SNA232068R0700	RC65	149
1SNA232069R0000	RC65	149
1SNA232072R2300	RC65	149
1SNA232111R1700	RC65	148
1SNA232112R1000	RC65	148
1SNA232113R1100	RC65	148
1SNA232114R1200	RC65	148
1SNA232115R1300	RC65	148
1SNA232116R1400	RC65	148
1SNA232117R1500	RC65	148
1SNA232118R2600	RC65	148
1SNA232119R2700	RC65	148
1SNA232131R1300	RC65	148
1SNA232132R1400	RC65	148
1SNA232133R1500	RC65	148
1SNA232134R1600	RC65	148
1SNA232135R1700	RC65	148
1SNA232136R1000	RC65	148
1SNA232137R1100	RC65	148
1SNA232150R0200	RC65	148
1SNA232151R2700	RC65	148
1SNA232152R2000	RC65	148
1SNA232153R2100	RC65	148
1SNA232154R2200	RC65	148
1SNA232155R2300	RC65	148
1SNA232156R2400	RC65	148
1SNA232157R2500	RC65	148
1SNA232158R0600	RC65	148
1SNA232159R0700	RC65	148
1SNA232160R0400	RC65	148
1SNA232161R2100	RC65	148
1SNA232162R2200	RC65	148
1SNA232163R2300	RC65	148
1SNA232164R2400	RC65	148
1SNA232165R2500	RC65	148
1SNA232166R2600	RC65	148
1SNA232167R2700	RC65	148
1SNA232168R0000	RC65	148
1SNA232169R0100	RC65	148
1SNA232170R0600	RC65	148
1SNA232171R2300	RC65	148
1SNA232172R2400	RC65	148
1SNA232173R2500	RC65	148
1SNA232174R2600	RC65	148
1SNA232175R2700	RC65	148
1SNA232180R2100	RC65	150
1SNA232181R1600	RC65	150
1SNA232182R1700	RC65	150
1SNA232183R1000	RC65	150

Index

Part Number classification

Part Number	Type	Page
1SNA232184R1100	RC65	150
1SNA232185R1200	RC65	150
1SNA232186R1300	RC65	150
1SNA232187R1400	RC65	150
1SNA232188R2500	RC65	150
1SNA232189R2600	RC65	150
1SNA232190R2300	RC65	150
1SNA232191R1000	RC65	150
1SNA232192R1100	RC65	150
1SNA232193R1200	RC65	150
1SNA232194R1300	RC65	150
1SNA232195R1400	RC65	150
1SNA232196R1500	RC65	150
1SNA232197R1600	RC65	150
1SNA232198R2700	RC65	150
1SNA232199R2000	RC65	150
1SNA232200R1500	RC65	150
1SNA232201R0200	RC65	147
1SNA232202R0300	RC65	147
1SNA232203R0400	RC65	147
1SNA232204R0500	RC65	147
1SNA232205R0600	RC65	147
1SNA232206R0700	RC65	147
1SNA232207R0000	RC65	147
1SNA232208R1100	RC65	147
1SNA232209R1200	RC65	147
1SNA232211R2300	RC65	147
1SNA232212R2400	RC65	147
1SNA232213R2500	RC65	147
1SNA232214R2600	RC65	147
1SNA232215R2700	RC65	147
1SNA232216R2000	RC65	147
1SNA232217R2100	RC65	147
1SNA232218R0200	RC65	147
1SNA232219R0300	RC65	147
1SNA232220R0000	RC65	147
1SNA232221R2500	RC65	147
1SNA232235R2300	RC65	150
1SNA232236R2400	RC65	150
1SNA232237R2500	RC65	150
1SNA232238R0600	RC65	150
1SNA232239R0700	RC65	150
1SNA232240R1400	RC65	149
1SNA232241R0100	RC65	149
1SNA232242R0200	RC65	149
1SNA232243R0300	RC65	149
1SNA232244R0400	RC65	149
1SNA232245R0500	RC65	149
1SNA232246R0600	RC65	149
1SNA232247R0700	RC65	149
1SNA232248R1000	RC65	149
1SNA232250R1600	RC65	149
1SNA232251R0300	RC65	149
1SNA232252R0400	RC65	149
1SNA232253R0500	RC65	149
1SNA232254R0600	RC65	149
1SNA232255R0700	RC65	149
1SNA232256R0000	RC65	149
1SNA232257R0100	RC65	149
1SNA232258R1200	RC65	149
1SNA232259R1300	RC65	149
1SNA232260R1000	RC65	149
1SNA233000R0100	RC610	85
1SNA233001R2600	RC610	134
1SNA233002R2700	RC610	134
1SNA233003R2000	RC610	134
1SNA233004R2100	RC610	134
1SNA233005R2200	RC610	134
1SNA233006R2300	RC610	134
1SNA233007R2400	RC610	134
1SNA233008R0500	RC610	134
1SNA233009R0600	RC610	134
1SNA233010R2200	RC610	134
1SNA233011R1700	RC610	134
1SNA233012R1000	RC610	134
1SNA233013R1100	RC610	134
1SNA233014R1200	RC610	134
1SNA233015R1300	RC610	134
1SNA233016R1400	RC610	134
1SNA233017R1500	RC610	134
1SNA233018R2600	RC610	134
1SNA233019R2700	RC610	134
1SNA233020R2400	RC610	134
1SNA233021R1100	RC610	134
1SNA233022R1200	RC610	134
1SNA233023R1300	RC610	134
1SNA233024R1400	RC610	134
1SNA233025R1500	RC610	134
1SNA233026R1600	RC610	134
1SNA233027R1700	RC610	134
1SNA233028R2000	RC610	134
1SNA233029R2100	RC610	134
1SNA233030R2600	RC610	135
1SNA233031R1300	RC610	135
1SNA233032R1400	RC610	135
1SNA233033R1500	RC610	135
1SNA233034R1600	RC610	135
1SNA233035R1700	RC610	135
1SNA233036R1000	RC610	135
1SNA233040R0000	RC610	137
1SNA233041R2500	RC610	137
1SNA233042R2600	RC610	137
1SNA233043R2700	RC610	137
1SNA233044R2000	RC610	137
1SNA233045R2100	RC610	137
1SNA233046R2200	RC610	137
1SNA233047R2300	RC610	137
1SNA233048R0400	RC610	137
1SNA233049R0500	RC610	137
1SNA233050R0200	RC610	137
1SNA233051R2700	RC610	137
1SNA233060R0400	RC610	137
1SNA233061R2100	RC610	137
1SNA233062R2200	RC610	137
1SNA233063R2300	RC610	137
1SNA233064R2400	RC610	137
1SNA233065R2500	RC610	137
1SNA233066R2600	RC610	137
1SNA233067R2700	RC610	137
1SNA233068R0000	RC610	137
1SNA233069R0100	RC610	137
1SNA233074R2600	RC610	135
1SNA233075R2700	RC610	135
1SNA233076R2000	RC610	135
1SNA233080R2100	RC610	137
1SNA233081R1600	RC610	137
1SNA233082R1700	RC610	137
1SNA233083R1000	RC610	137
1SNA233084R1100	RC610	137
1SNA233085R1200	RC610	137
1SNA233086R1300	RC610	137
1SNA233087R1400	RC610	137
1SNA233088R2500	RC610	137
1SNA233090R2300	RC610	134
1SNA233091R1000	RC610	134
1SNA233092R1100	RC610	134
1SNA233093R1200	RC610	134
1SNA233094R1300	RC610	134
1SNA233095R1400	RC610	134
1SNA233096R1500	RC610	134
1SNA233097R1600	RC610	134
1SNA233098R2700	RC610	134
1SNA233099R2000	RC610	134
1SNA233100R0200	RC610	134
1SNA233101R2700	RC610	134
1SNA233102R2000	RC610	134
1SNA233103R2100	RC610	134
1SNA233104R2200	RC610	134
1SNA233105R2300	RC610	134
1SNA233106R2400	RC610	134
1SNA233107R2500	RC610	134
1SNA233108R0600	RC610	134
1SNA233109R0700	RC610	134
1SNA233110R2300	RC610	134
1SNA233111R1000	RC610	136
1SNA233112R1100	RC610	136
1SNA233113R1200	RC610	136
1SNA233114R1300	RC610	136
1SNA233115R1400	RC610	136
1SNA233116R1500	RC610	136
1SNA233117R1600	RC610	136
1SNA233118R2700	RC610	136
1SNA233119R2000	RC610	136
1SNA233120R2500	RC610	134
1SNA233124R1500	RC610	138
1SNA233125R1600	RC610	138
1SNA233126R1700	RC610	138
1SNA233127R1000	RC610	138
1SNA233131R1400	RC610	136
1SNA233132R1500	RC610	136
1SNA233133R1600	RC610	135
1SNA233134R1700	RC610	135
1SNA233135R1000	RC610	135
1SNA233136R1100	RC610	135
1SNA233137R1200	RC610	135
1SNA233141R2600	RC610	135
1SNA233142R2700	RC610	135
1SNA233143R2000	RC610	138
1SNA233144R2100	RC610	138
1SNA233145R2200	RC610	138
1SNA233146R2300	RC610	138
1SNA233147R2400	RC610	138
1SNA233150R0300	RC610	136
1SNA233151R2000	RC610	136
1SNA233152R2100	RC610	136
1SNA233153R2200	RC610	136
1SNA233154R2300	RC610	136
1SNA233155R2400	RC610	136
1SNA233156R2500	RC610	136
1SNA233157R2600	RC610	136
1SNA233158R0700	RC610	136
1SNA233159R0000	RC610	136
1SNA233160R0500	RC610	136
1SNA233161R2200	RC610	136
1SNA233162R2300	RC610	136
1SNA233163R2400	RC610	136
1SNA233164R2500	RC610	136
1SNA233165R2600	RC610	136
1SNA233166R2700	RC610	136
1SNA233167R2000	RC610	136
1SNA233168R0100	RC610	136
1SNA233169R0200	RC610	136
1SNA233170R0700	RC610	136
1SNA233171R2400	RC610	136
1SNA233172R2500	RC610	136
1SNA233173R2600	RC610	136
1SNA233174R2700	RC610	136
1SNA233175R2000	RC610	136
1SNA233180R2200	RC610	138
1SNA233181R1700	RC610	138
1SNA233182R1000	RC610	138
1SNA233183R1100	RC610	138
1SNA233184R1200	RC610	138
1SNA233185R1300	RC610	138
1SNA233186R1400	RC610	138
1SNA233187R1500	RC610	138
1SNA233188R2600	RC610	138
1SNA233189R2700	RC610	138
1SNA233190R2400	RC610	138
1SNA233191R1100	RC610	138
1SNA233192R1200	RC610	138
1SNA233193R1300	RC610	138
1SNA233194R1400	RC610	138
1SNA233195R1500	RC610	138
1SNA233196R1600	RC610	138
1SNA233197R1700	RC610	138
1SNA233198R2000	RC610	138
1SNA233199R2100	RC610	138
1SNA233200R1600	RC610	138
1SNA233201R0300	RC610	135
1SNA233202R0400	RC610	135
1SNA233203R0500	RC610	135
1SNA233204R0600	RC610	135
1SNA233205R0700	RC610	135
1SNA233206R0000	RC610	135
1SNA233207R0100	RC610	135
1SNA233208R1200	RC610	135
1SNA233209R1300	RC610	135
1SNA233211R2400	RC610	135
1SNA233212R2500	RC610	135
1SNA233213R2600	RC610	135
1SNA233214R2700	RC610	135
1SNA233215R2000	RC610	135
1SNA233216R2100	RC610	135
1SNA233217R2200	RC610	135
1SNA233218R0300	RC610	135
1SNA233219R0400	RC610	135
1SNA233220R0100	RC610	135
1SNA233221R2600	RC610	135
1SNA233235R2400	RC610	138
1SNA233236R2500	RC610	138
1SNA233237R2600	RC610	138
1SNA233238R0700	RC610	138
1SNA233239R0000	RC610	138
1SNA233240R1500	RC610	137
1SNA233241R0200	RC610	137
1SNA233242R0300	RC610	137
1SNA233243R0400	RC610	137
1SNA233244R0500	RC610	137
1SNA233245R0600	RC610	137
1SNA233246R0700	RC610	137
1SNA233247R0000	RC610	137
1SNA233248R1100	RC610	137
1SNA233250R1700	RC610	137
1SNA233251R0400	RC610	137
1SNA233252R0500	RC610	137
1SNA233253R0600	RC610	137
1SNA233254R0700	RC610	137
1SNA233255R0000	RC610	137
1SNA233256R0100	RC610	137
1SNA233257R0200	RC610	137
1SNA233258R1300	RC610	137
1SNA233259R1400	RC610	137
1SNA233260R1100	RC610	137
1SNA233600R1700	RC610TT	17
1SNA233700R1300	RC610TT-YL	17
1SNA234000R0200	RC810	85
1SNA234001R2700	RC810	139
1SNA234002R2000	RC810	139
1SNA234003R2100	RC810	139
1SNA234004R2200	RC810	139
1SNA234005R2300	RC810	139
1SNA234006R2400	RC810	139
1SNA234007R2500	RC810	139
1SNA234008R0600	RC810	139

Index

Part Number classification

Part Number	Type	Page
1SNA234009R0700	RC810	139
1SNA234010R2300	RC810	139
1SNA234011R1000	RC810	139
1SNA234012R1100	RC810	139
1SNA234013R1200	RC810	139
1SNA234014R1300	RC810	139
1SNA234015R1400	RC810	139
1SNA234016R1500	RC810	139
1SNA234017R1600	RC810	139
1SNA234018R2700	RC810	139
1SNA234019R2000	RC810	139
1SNA234020R2500	RC810	139
1SNA234021R1200	RC810	139
1SNA234030R2700	RC810	139
1SNA234031R1400	RC810	139
1SNA234032R1500	RC810	139
1SNA234033R1600	RC810	139
1SNA234034R1700	RC810	139
1SNA234035R1000	RC810	139
1SNA234036R1100	RC810	139
1SNA234037R1200	RC810	139
1SNA234038R2300	RC810	139
1SNA234039R2400	RC810	139
1SNA234040R0100	RC810	141
1SNA234041R2600	RC810	141
1SNA234042R2700	RC810	141
1SNA234043R2000	RC810	141
1SNA234044R2100	RC810	141
1SNA234045R2200	RC810	141
1SNA234046R2300	RC810	141
1SNA234047R2400	RC810	141
1SNA234048R0500	RC810	141
1SNA234049R0600	RC810	141
1SNA234050R0300	RC810	141
1SNA234051R2000	RC810	141
1SNA234052R2100	RC810	141
1SNA234053R2200	RC810	141
1SNA234054R2300	RC810	141
1SNA234055R2400	RC810	141
1SNA234056R2500	RC810	141
1SNA234057R2600	RC810	141
1SNA234058R0700	RC810	141
1SNA234059R0000	RC810	141
1SNA234060R0500	RC810	141
1SNA234061R2200	RC810	141
1SNA234062R2300	RC810	141
1SNA234063R2400	RC810	141
1SNA234064R2500	RC810	141
1SNA234065R2600	RC810	141
1SNA234066R2700	RC810	141
1SNA234067R2000	RC810	141
1SNA234068R0100	RC810	141
1SNA234069R0200	RC810	141
1SNA234072R2500	RC810	141
1SNA234111R1100	RC810	140
1SNA234112R1200	RC810	140
1SNA234113R1300	RC810	140
1SNA234114R1400	RC810	140
1SNA234115R1500	RC810	140
1SNA234116R1600	RC810	140
1SNA234130R2000	RC810	139
1SNA234150R0400	RC810	140
1SNA234151R2100	RC810	140
1SNA234152R2200	RC810	140
1SNA234153R2300	RC810	140
1SNA234154R2400	RC810	140
1SNA234155R2500	RC810	140
1SNA234156R2600	RC810	140
1SNA234157R2700	RC810	140
1SNA234158R0000	RC810	140
1SNA234159R0100	RC810	140
1SNA234160R0600	RC810	140
1SNA234161R2300	RC810	140
1SNA234162R2400	RC810	140
1SNA234163R2500	RC810	140
1SNA234164R2600	RC810	140
1SNA234165R2700	RC810	140
1SNA234166R2000	RC810	140
1SNA234167R2100	RC810	140
1SNA234168R0200	RC810	140
1SNA234169R0300	RC810	140
1SNA234170R0000	RC810	140
1SNA234171R2500	RC810	140
1SNA234172R2600	RC810	140
1SNA234173R2700	RC810	140
1SNA234174R2000	RC810	140
1SNA234175R2100	RC810	140
1SNA234180R2300	RC810	141
1SNA234181R1000	RC810	141
1SNA234182R1100	RC810	141
1SNA234183R1200	RC810	141
1SNA234184R1300	RC810	141
1SNA234185R1400	RC810	141
1SNA234186R1500	RC810	141
1SNA234187R1600	RC810	141
1SNA234188R2700	RC810	141
1SNA234189R2000	RC810	141
1SNA234190R2500	RC810	141
1SNA234191R1200	RC810	141
1SNA234192R1300	RC810	141
1SNA234193R1400	RC810	141
1SNA234194R1500	RC810	141
1SNA234195R1600	RC810	141
1SNA234196R1700	RC810	141
1SNA234197R1000	RC810	141
1SNA234198R2100	RC810	141
1SNA234199R2200	RC810	141
1SNA234200R1700	RC810	141
1SNA234201R0400	RC810	141
1SNA234202R0500	RC810	141
1SNA234203R0600	RC810	141
1SNA234204R0700	RC810	141
1SNA234205R0000	RC810	141
1SNA234600R1000	RC810TT	17
1SNA234700R1400	RC810TT-YL	17
1SNA235093R1400	WMTT12	26
1SNA235094R1500	WMTT18	26
1SNA235095R1600	RCP510	18
1SNA235096R1700	RCW510	18
1SNA235097R1000	RCL510	18
1SNA235103R2300	PAM21515	32
1SNA235104R2400	PAM43015	32
1SNA235105R2500	PAM21520	32
1SNA235106R2600	PAM43020	32
1SNA235109R0100	PSP5015	105
1SNA235111R1200	PPB2715	34
1SNA235114R1500	PAT10060	36
1SNA235115R1600	PPT12030	36
1SNA235116R1700	PPT18050	36
1SNA235117R1000	RING122	27
1SNA235118R2100	RING124	27
1SNA235119R2200	RING127	27
1SNA235120R2700	RING1210	27
1SNA235123R1600	RING182	27
1SNA235124R1700	RING184	27
1SNA235125R1000	RING187	27
1SNA235126R1100	RING1810	27
1SNA235129R2400	SNAP152	27
1SNA235130R2100	SNAP154	27
1SNA235131R1600	SNAP157	27
1SNA235132R1700	SNAP1510	27
1SNA235133R1000	SNAP232	27
1SNA235134R1100	SNAP234	27
1SNA235135R1200	SNAP237	27
1SNA235136R1300	SNAP2310	27
1SNA235137R1400	RINGT23	27
1SNA235142R2100	RINGT209	28
1SNA235146R2500	PAM100015	35
1SNA235147R2600	PCT100015	35
1SNA235148R0700	WM12	100
1SNA235149R0000	WM18	100
1SNA235150R0500	PCGS209	28
1SNA235151R2200	RPA-TT	30
1SNA235152R2300	RPA-TT-YL	30
1SNA235155R2600	PIB2-TT	30
1SNA235156R2700	BA4	33
1SNA235157R2000	PIB2-TT-YL	30
1SNA235158R0100	RCPEAD-TT	22
1SNA235159R0200	RCPEAD-TT-YL	22
1SNA235460R0400	RCCV	103
1SNA235461R2100	PIB2	104
1SNA235462R2200	PIB3	96
1SNA235463R2300	RPA	104
1SNA235700R1500	HTP500-V2 KIT	12
1SNA235702R0300	HTS500	12
1SNA235703R0400	HTP500-FEED	12
1SNA235704R0500	HTP500-PL	12
1SNA235705R0600	HTP500-PL2	12
1SNA235706R0700	HTP500-BAS	12
1SNA235707R0000	HTP500-PL3	12
1SNA235709R1200	HTP500-PW	12
1SNA235710R0600	RIB-B	12
1SNA235711R2300	RIB-R	12
1SNA235712R2400	HTP500-BA4	12
1SNA235714R2600	HTP500-CLEAN	12
1SNA235715R2700	HTP500-ROLL	12
1SNA235716R2000	HTP500-PRINT	12
1SNA235717R2100	HTP500-WB	12
1SNA235718R0200	RIB-RS	12
1SNA236000R0400	RCT610	87
1SNA236001R2100	RCT610	153
1SNA236500R0600	RCT810	87
1SNA236501R2300	RCT810	153
1SNA237000R0500	RCAL85	86
1SNA237001R2200	RCAL85	151
1SNA237002R2300	RCAL85	151
1SNA237003R2400	RCAL85	151
1SNA237004R2500	RCAL85	151
1SNA237005R2600	RCAL85	151
1SNA237006R2700	RCAL85	151
1SNA237007R2000	RCAL85	151
1SNA237008R0100	RCAL85	151
1SNA237009R0200	RCAL85	151
1SNA237010R2600	RCAL85	151
1SNA237011R1300	RCAL85	151
1SNA237012R1400	RCAL85	151
1SNA237013R1500	RCAL85	151
1SNA237014R1600	RCAL85	151
1SNA237015R1700	RCAL85	151
1SNA237016R1000	RCAL85	151
1SNA237017R1100	RCAL85	151
1SNA237018R2200	RCAL85	151
1SNA237019R2300	RCAL85	151
1SNA237020R2000	RCAL85	151
1SNA237021R1500	RCAL85	151
1SNA237030R2200	RCAL85	151
1SNA237031R1700	RCAL85	151
1SNA237032R1000	RCAL85	151
1SNA237033R1100	RCAL85	151
1SNA237034R1200	RCAL85	151
1SNA237035R1300	RCAL85	151
1SNA237036R1400	RCAL85	151
1SNA237040R0400	RCAL85	152
1SNA237041R2100	RCAL85	152
1SNA237042R2200	RCAL85	152
1SNA237043R2300	RCAL85	152
1SNA237044R2400	RCAL85	152
1SNA237045R2500	RCAL85	152
1SNA237046R2600	RCAL85	152
1SNA237047R2700	RCAL85	152
1SNA237048R0000	RCAL85	152
1SNA237049R0100	RCAL85	152
1SNA237050R0600	RCAL85	152
1SNA237051R2300	RCAL85	152
1SNA237060R0000	RCAL85	152
1SNA237061R2500	RCAL85	152
1SNA237062R2600	RCAL85	152
1SNA237063R2700	RCAL85	152
1SNA237064R2000	RCAL85	152
1SNA237065R2100	RCAL85	152
1SNA237066R2200	RCAL85	152
1SNA237067R2300	RCAL85	152
1SNA237068R0400	RCAL85	152
1SNA237074R2200	RCAL85	151
1SNA237075R2300	RCAL85	151
1SNA237076R2400	RCAL85	151
1SNA237080R2500	RCAL85	152
1SNA237081R1200	RCAL85	152
1SNA237082R1300	RCAL85	152
1SNA237083R1400	RCAL85	152
1SNA237084R1500	RCAL85	152
1SNA237085R1600	RCAL85	152
1SNA237086R1700	RCAL85	152
1SNA237087R1000	RCAL85	152
1SNA237088R2100	RCAL85	152
1SNA237131R1000	RCAL85	151
1SNA237132R1100	RCAL85	151
1SNA238000R1600	RC1010	85
1SNA238001R0300	RC1010	142
1SNA238002R0400	RC1010	142
1SNA238003R0500	RC1010	142
1SNA238004R0600	RC1010	142
1SNA238005R0700	RC1010	142
1SNA238006R0000	RC1010	142
1SNA238007R0100	RC1010	142
1SNA238008R1200	RC1010	142
1SNA238009R1300	RC1010	142
1SNA238010R0700	RC1010	142
1SNA238011R2400	RC1010	142
1SNA238012R2500	RC1010	142
1SNA238013R2600	RC1010	142
1SNA238014R2700	RC1010	142
1SNA238015R2000	RC1010	142
1SNA238016R2100	RC1010	142
1SNA238017R2200	RC1010	142
1SNA238018R0300	RC1010	142
1SNA238019R0400	RC1010	142
1SNA238020R0100	RC1010	142
1SNA238021R2600	RC1010	142
1SNA238022R2700	RC1010	142
1SNA238023R2000	RC1010	142
1SNA238024R2100	RC1010	142
1SNA238025R2200	RC1010	142
1SNA238026R2300	RC1010	142
1SNA238030R0300	RC1010	142
1SNA238031R2000	RC1010	142
1SNA238032R2100	RC1010	142
1SNA238033R2200	RC1010	142
1SNA238034R2300	RC1010	142
1SNA238035R2400	RC1010	142
1SNA238036R2500	RC1010	142
1SNA238037R2600	RC1010	142
1SNA238038R0700	RC1010	142
1SNA238039R0000	RC1010	142
1SNA238040R1500	RC1010	142

Index
Part Number classification

Part Number	Type	Page
1SNA238041R0200	RC1010	142
1SNA238050R1700	RC1010	143
1SNA238051R0400	RC1010	143
1SNA238052R0500	RC1010	143
1SNA238053R0600	RC1010	143
1SNA238054R0700	RC1010	143
1SNA238055R0000	RC1010	143
1SNA238056R0100	RC1010	143
1SNA238057R0200	RC1010	143
1SNA238058R1300	RC1010	143
1SNA238059R1400	RC1010	143
1SNA238060R1100	RC1010	143
1SNA238061R0600	RC1010	143
1SNA238062R0700	RC1010	143
1SNA238063R0000	RC1010	143
1SNA238064R0100	RC1010	143
1SNA238065R0200	RC1010	143
1SNA238066R0300	RC1010	143
1SNA238067R0400	RC1010	143
1SNA238068R1500	RC1010	143
1SNA238069R1600	RC1010	143
1SNA238070R1300	RC1010	143
1SNA238071R0000	RC1010	143
1SNA238072R0100	RC1010	143
1SNA238073R0200	RC1010	143
1SNA238074R0300	RC1010	143
1SNA238075R0400	RC1010	143
1SNA238080R0600	RC1010	143
1SNA238081R2300	RC1010	143
1SNA238082R2400	RC1010	143
1SNA238083R2500	RC1010	143
1SNA238084R2600	RC1010	143
1SNA238085R2700	RC1010	143
1SNA238086R2000	RC1010	143
1SNA238087R2100	RC1010	143
1SNA238088R0200	RC1010	143
1SNA290455R0700	RB-12W7	88
1SNA360000R2400	KIT MAO AMS 600	80
1SNA360000R2500	AMS 250 BASIC KIT	80
1SNA360010R1500	SPRC 1	81
1SNA360011R0200	SPRCC 2	103
1SNA360011R1500	SPRC 2	81
1SNA360014R0500	SPRC 4	81
1SNA360015R0600	SPRC 5	81
1SNA360016R0700	SPRC 6	81
1SNA360017R0000	SPRC 7	81
1SNA360018R1100	SPRC 8	81
1SNA360019R1200	SPRC 9	81
1SNA360020R1700	SPRC 10	81
1SNA360021R0400	SPRC 11	81
1SNA360023R0600	SPRC 13	81
1SNA360024R0700	SPRC 14	81
1SNA360025R0000	SPRC 15	81
1SNA360026R0100	SPRC 16	81
1SNA360031R0600	SPRC 21	81
1SNA360036R0300	SPRC 26	81
1SNA360037R0400	SPRC 27	81
1SNA360038R1500	SPRC 29	81
1SNA360039R1700	SPRC 30-3	81
1SNA360040R2300	SPRC 28	81
1SNA360098R1200	PEN HOLDER	81
1SNA360100R2500	AMS PEN 0.25	81
1SNA360101R1200	AMS PEN 0.35	81
1SNA360103R1400	AMS PEN 0.18	81
1SNA360104R1500	AMS PEN 0.50	81
1SNA360105R1600	AMS PEN 0.70	81
1SNA360106R1700	AMS PEN 1.00	81
1SNA360120R1000	DISPOSABLE AMS PEN 0.25	81
1SNA360121R0500	DISPOSABLE AMS PEN 0.35	81
1SNA360122R1000	DISPOSABLE AMS PEN ED-R 0.25	81
1SNA360123R0500	DISPOSABLE AMS PEN ED-R 0.35	81
1SNA360124R1000	DISPOSABLE AMS PEN ED-R 0.18	81
1SNA360150R2600	AMS INK CARTRIDGES	81
1SNA360155R1700	AMS CLEANER FLUID	81
1SNA360156R1000	AMS CLEANER KIT	81
1SNA360161R1500	DUST COVER	12
1SNA360162R1600	SERVICE KIT FOR AMS 600	81
1SNA360163R1700	SPDST1	81
1SNA399719R1000	PEAD	22
1SNA399725R0600	RCPEAD	94
1SNA399726R0700	EPR2	22
1SNA400252R1200	VSP22	157
1SNB015090R4030	MG-PTS 15090	67
1SNB040090R0410	MG-TPM 40090	60
1SNB040091R0412	MG-TPM 40091	60
1SNB040092R0415	MG-TPM 40092	60
1SNB040140R0412	MG-TDM-01 40140	56
1SNB040141R0416	MG-TDM-01 40141	56
1SNB040190R0412	MG-TDM-01 40190	56
1SNB040191R0416	MG-TDM-01 40191	56
1SNB040240R0412	MG-TDM-02 40240	56
1SNB040241R0416	MG-TDM-02 40241	56
1SNB040290R0412	MG-TDM-02 40290	56
1SNB040291R0416	MG-TDM-02 40291	56
1SNB040340R0412	MG2-TDMO-01 40340	57

Part Number	Type	Page
1SNB040341R0416	MG2-TDMO-01 40341	57
1SNB040390R0412	MG2-TDMO-01 40390	57
1SNB040391R0416	MG2-TDMO-01 40391	57
1SNB040440R0412	MG2-TDMO-02 40440	57
1SNB040441R0416	MG2-TDMO-02 40441	57
1SNB040490R0412	MG2-TDMO-02 40490	57
1SNB040491R0416	MG2-TDMO-02 40491	57
1SNB040540R0412	MG2-TDMO-03 40540	57
1SNB040541R0416	MG2-TDMO-03 40541	57
1SNB040590R0412	MG2-TDMO-03 40590	57
1SNB040591R0416	MG2-TDMO-03 40591	57
1SNB041090R0510	MG-CPM-01 41090	48
1SNB041091R0515	MG-CPM-01 41091	48
1SNB041094R0507	MG-CPM-01 41094	46
1SNB041140R0510	MG-CPM-02 41140	48
1SNB041190R0510	MG-CPM-02 41190	48
1SNB041291R0510	MG-CPM-03 41291	46
1SNB041293R0510	MG-CPM-03 41293	48
1SNB041340R0510	MG-CPM-04 41340	46
1SNB041390R0510	MG-CPM-04 41390	46
1SNB041391R0610	MG-CPM-04 41391	46
1SNB041395R0510	MG-CPM-04 41395	48
1SNB041490R0510	MG-CPM-05 41490	46
1SNB041494R0510	MG-CPM-05 41494	48
1SNB041591R0510	MG-CPM-06 41591	48
1SNB041691R0510	MG-CPM-07 41691	49
1SNB041740R0512	MG-CPM-13 41740	46
1SNB041741R0612	MG-CPM-13 41741	46
1SNB041790R0512	MG-CPM-13 41790	46
1SNB041791R0612	MG-CPM-13 41791	46
1SNB041890R0510	MG-CPM-09 41890	49
1SNB042090R0410	MG-TPMF 42090B	62
1SNB042091R0412	MG-TPMF 42091B	62
1SNB042092R0415	MG-TPMF 42092B	62
1SNB043090R0010	MG-CPMF 43090	47
1SNB043091R0076	MG-CPMF 43091	47
1SNB043094R0052	MG-CPMF 43094	47
1SNB043146R0012	MG-CPMFA 43146	47
1SNB043196R0012	MG-CPMFA 43196	47
1SNB044845R0915	MG-VYT 44845	65
1SNB044895R0915	MG-VYT 44895	65
1SNB044896R0920	MG-VYT 44896N	65
1SNB045194R1735	MG-TAR 45194	72
1SNB045195R1744	MG-TAR 45195	72
1SNB046192R0512	MG-CPM-10 46192	49
1SNB046390R4209	MG-CPM-12 46390	46
1SNB046391R4206	MG-CPM-12 46391	49
1SNB046415R0615	MG-VYT 46415	65
1SNB046423R0817	MG-VYT 46423	65
1SNB046811R0052	MG-VYT 46811	65
1SNB046815R0615	MG-VYT 46815	65
1SNB046823R0817	MG-VYT 46823	65
1SNB046824R0821	MG-VYT 46824	65
1SNB046828R0715	MG-VYT 46828	65
1SNB046891R0710	MG-VYT 46891	65
1SNB046896R0920	MG-VYT 46896N	65
1SNB046910R0935	MG-VYT 46910N	65
1SNB046915R0615	MG-VYT 46915	65
1SNB046923R0817	MG-VYT 46923	65
1SNB046927R0512	MG-VYT 46927	65
1SNB046935R0720	MG-VYT 46935	65
1SNB046990R0010	MG-CPMFA 46990	47
1SNB047041R1527	MG-TAP 47041N	68
1SNB047047R1827	MG-TAP 47047	68
1SNB047091R1527	MG-TAP 47091N	68
1SNB047092R1549	MG-TAP 47092N	68
1SNB047093R1567	MG-TAP 47093N	68
1SNB047096R0827	MG-TAP 47096	68
1SNB047097R1827	MG-TAP 47097	68
1SNB047198R1543	MG-TAP 47198	68
1SNB048903R0052	MG-VRT-R 48903	74
1SNB049040R0920	MG-TAPW 49040N	70
1SNB049042R0912	MG-TAPW 49042N	70
1SNB049043R0915	MG-TAPW 49043N	70
1SNB049046R0929	MG-TAPW 49046	70
1SNB049090R0920	MG-TAPW 49090N	70
1SNB049091R0935	MG-TAPW 49091N	70
1SNB049093R0915	MG-TAPW 49093N	70
1SNB049096R0929	MG-TAPW 49096	70
1SNB049143R1527	MG-TAA 49143N	64
1SNB049144R1549	MG-TAA 49144N	64
1SNB049145R1567	MG-TAA 49145N	64
1SNB049148R1735	MG-TAA 49148	64
1SNB049190N0920	MG-TAA 49190N	64
1SNB049191R0935	MG-TAA 49191N	64
1SNB049193R1527	MG-TAA 49193N	64
1SNB049194R1549	MG-TAA 49194N	64
1SNB049195R1567	MG-TAA 49195N	64
1SNB049196R0720	MG-TAA 49196	64
1SNB049198R1735	MG-TAA 49198	64
1SNB049298R1544	MG-TAA 49298	64
1SNB049397R0915	MG-TAA 49397N	64
1SNB049448R8530	MG-TAA 49448	64
1SNB049493R0817	MG-TAA 49493	64
1SNB049498R8530	MG-TAA 49498	64

Part Number	Type	Page
1SNB050100R0000	PM-01 50100	61
1SNB050102R0001	PM-01 50102	61
1SNB050102R0002	PM-01 50102-HF	61
1SNB050110R0000	PM-01 50110	61
1SNB050120R0000	PM-01 50120	61
1SNB050122R0000	PM-01 50122	61
1SNB050200R0000	PM-02 50200	61
1SNB050202R0000	PM-02 50202	61
1SNB050210R0000	PM-02 50210	61
1SNB050212R0000	PM-02 50212	61
1SNB050220R0000	PM-02 50220	61
1SNB050222R0000	PM-02 50222	61
1SNB050300R0000	PM-03 50300	61
1SNB050302R0000	PM-03 50302	61
1SNB050310R0000	PM-03 50310	61
1SNB050312R0000	PM-03 50312	61
1SNB050320R0000	PM-03 50320	61
1SNB050322R0000	PM-03 50322	61
1SNB050400R0000	PM-04 50400	61
1SNB050402R0000	PM-04 50402	61
1SNB050410R0000	PM-04 50410	61
1SNB050411R0000	PM-04 50411	61
1SNB050420R0000	PM-04 50420	61
1SNB050421R0000	PM-04 50421	61
1SNB050500R0000	PM-05 50500	61
1SNB050510R0000	PM-05 50510	61
1SNB050521R0000	PM-05 50521	61
1SNB050600R0000	PM-06 50600	61
1SNB050610R0000	PM-06 50610	61
1SNB050620R0000	PM-06 50620	61
1SNB051000R0000	PM-AC 51000N	61
1SNB051010R0000	PM-AC 51010N	61
1SNB051020R0000	PM-AC 51020N	61
1SNB053010R0000	PM-ET 53010	61
1SNB053020R0000	PM-ET 53020	61
1SNB054142R1357	MG-ETF 54142	59
1SNB054192R1357	MG-ETF 54192	59
1SNB063020R0000	PMF-ET 63020	63
1SNB066000R0000	PMF-AC 66000N	63
1SNB066010R0000	PMF-AC 66010N	63
1SNB066020R0000	PMF-AC 66020N	63
1SNB066040R0000	PMF-AC 66040N	63
1SNB071000R0017	MG-PLC 71000	73
1SNB071001R0022	MG-PLC 71001	73
1SNB071002R0012	MG-PLC 71002	73
1SNB071040R0017	MG-PLC 71040	73
1SNB071041R0022	MG-PLC 71041	73
1SNB071042R0012	MG-PLC 71042	73
1SNB071044R0025	MG-PLC 71044	73
1SNB071050R0017	MG-PLC 71050	73
1SNB071051R0022	MG-PLC 71051	73
1SNB071052R0012	MG-PLC 71052	73
1SNB071090R0017	MG-PLC 71090	73
1SNB071091R0022	MG-PLC 71091	73
1SNB071092R0012	MG-PLC 71092	73
1SNB071094R0025	MG-PLC 71094	73
1SNB088903R0052	MG-VRT-A 88903	74
1SNB090000R0000	PMF-00 90000	63
1SNB090010R0000	PMF-00 90010	63
1SNB090020R0000	PMF-00 90020	63
1SNB090100R0000	PMF-01 90100	63
1SNB090110R0000	PMF-01 90110	63
1SNB090120R0000	PMF-01 90120	63
1SNB090200R0000	PMF-02 90200	63
1SNB090210R0000	PMF-02 90210	63
1SNB090220R0000	PMF-02 90220	63
1SNB090300R0000	PMF-03 90300	63
1SNB090310R0000	PMF-03 90310	63
1SNB090320R0000	PMF-03 90320	63
1SNB090400R0000	PMF-04 90400	63
1SNB090410R0000	PMF-04 90410	63
1SNB090420R0000	PMF-04 90420	63
1SNB090500R0000	PMF-05 90500	63
1SNB090510R0000	PMF-05 90510	63
1SNB090520R0000	PMF-05 90520	63
1SNB419001R0000	MG3 KIT	43
1SNB990452R0000	RTR-TAP 990452	69
1SNB990453R0000	RTA-TAP 990453N	69
1SNB990454R0000	RTR-TAP 990454	69
1SNB990455R0000	RTA-TAP 990455N	69
1SNB990456R0000	RT-CCP 990456	69
1SNB990513R1549	MG-TAP-CCS 990513	71
1SNB990514R1567	MG-TAP-CCS 990514	71
1SNB990653R0000	RTA-TAPW 990653N	70
1SNB990824R0015	MG-17.5-A 990824	66
1SNB990826R0015	MG-17.5-A 990826	66
1SNB991000R0000	MG2-PWC 991000	43
1SNB991002R0000	MG2-PLT 991002	43
1SNB991004R0000	MG2-WTB 991004	43
1SNB991005R0000	MG2-STB 991005	43
1SNB991006R0000	MG2-CTB 991006	43
1SNB991007R0000	MG2-PTD 991007	43
1SNB991008R0000	MG2-MTB 991008	43
1SNB991010R0000	MG2-PTM 991010	43
1SNB991011R0000	MG2-QTB 991011	43

Index

Part Number classification

Part Number	Type	Page
1SNB991012R0000	MG2-ABM 991012	43
1SNB991013R0000	MG2-LTB 991013	43
1SNB991016R0000	MG2-ETB 991016	43
1SNB991502R0000	MG2-TWC 991502	43
1SNB991512R0000	MG2-TTB 991512	43
1SNB991513R0000	MG2-TMT 991513	43
1SNB991522R0000	MG2-TLT 991522	43
1SNB991532R0000	MG2-TGT 991532	43
1SNB991542R0000	MG2-TWT 991542	43
1SNB991552R0000	MG2-TST 991552	43
1SNB991562R0000	MG2-TCT 991562	43
1SNB991563R0000	MG2-TTD 991563	43
1SNB991600R0000	MG2-ETR 991600	43
1SNB991601R0000	MG2-ETR 991601	43
1SNB991602R0000	MG2-ETR 991602	43
1SNB991603R0000	MG2-ETR 991603	43
1SNB991606R0000	MG2-ETR 991606	43
1SNB991670R0000	MG2-CKP 991670	43
1SNK140000R0000	MC512	16
1SNK140004R0000	MC512-YL	16
1SNK140011R0000	MC512PA	114
1SNK140012R0000	MC512PA	116
1SNK140021R0000	MC512PA	114
1SNK140022R0000	MC512PA	116
1SNK140031R0000	MC512PA	114
1SNK140032R0000	MC512PA	116
1SNK140041R0000	MC512PA	114
1SNK140042R0000	MC512PA	116
1SNK140051R0000	MC512PA	114
1SNK140052R0000	MC512PA	116
1SNK140061R0000	MC512PA	114
1SNK140062R0000	MC512PA	116
1SNK140071R0000	MC512PA	114
1SNK140072R0000	MC512PA	116
1SNK140081R0000	MC512PA	114
1SNK140082R0000	MC512PA	116
1SNK140083R0000	MC512PA	114
1SNK140084R0000	MC512PA	116
1SNK140091R0000	MC512PA	114
1SNK140092R0000	MC512PA	116
1SNK140101R0000	MC512PA	114
1SNK140102R0000	MC512PA	116
1SNK140111R0000	MC512PA	114
1SNK140112R0000	MC512PA	116
1SNK140121R0000	MC512PA	114
1SNK140122R0000	MC512PA	116
1SNK140131R0000	MC512PA	114
1SNK140132R0000	MC512PA	116
1SNK140141R0000	MC512PA	114
1SNK140142R0000	MC512PA	116
1SNK140151R0000	MC512PA	114
1SNK140152R0000	MC512PA	116
1SNK140161R0000	MC512PA	114
1SNK140162R0000	MC512PA	116
1SNK140171R0000	MC512PA	114
1SNK140172R0000	MC512PA	116
1SNK140181R0000	MC512PA	114
1SNK140182R0000	MC512PA	116
1SNK140191R0000	MC512PA	114
1SNK140192R0000	MC512PA	116
1SNK140201R0000	MC512PA	114
1SNK140202R0000	MC512PA	116
1SNK145011R0000	MC512PA	114
1SNK145012R0000	MC512PA	116
1SNK145021R0000	MC512PA	114
1SNK145022R0000	MC512PA	116
1SNK145031R0000	MC512PA	114
1SNK145032R0000	MC512PA	116
1SNK145041R0000	MC512PA	114
1SNK145042R0000	MC512PA	116
1SNK145051R0000	MC512PA	114
1SNK145052R0000	MC512PA	116
1SNK145061R0000	MC512PA	114
1SNK145062R0000	MC512PA	116
1SNK145071R0000	MC512PA	114
1SNK145072R0000	MC512PA	116
1SNK145081R0000	MC512PA	114
1SNK145082R0000	MC512PA	116
1SNK145091R0000	MC512PA	114
1SNK145092R0000	MC512PA	116
1SNK145102R0000	MC512PA	116
1SNK146011R0000	MC512PA	115
1SNK146012R0000	MC512PA	116
1SNK146021R0000	MC512PA	115
1SNK146022R0000	MC512PA	116
1SNK146031R0000	MC512PA	115
1SNK146032R0000	MC512PA	116
1SNK146041R0000	MC512PA	115
1SNK146042R0000	MC512PA	116
1SNK146051R0000	MC512PA	115
1SNK146052R0000	MC512PA	116
1SNK146061R0000	MC512PA	115
1SNK146062R0000	MC512PA	116
1SNK146071R0000	MC512PA	115
1SNK146072R0000	MC512PA	116
1SNK146081R0000	MC512PA	115
1SNK146082R0000	MC512PA	116
1SNK146091R0000	MC512PA	115
1SNK146092R0000	MC512PA	116
1SNK146101R0000	MC512PA	115
1SNK146102R0000	MC512PA	116
1SNK146111R0000	MC512PA	115
1SNK146112R0000	MC512PA	117
1SNK146121R0000	MC512PA	115
1SNK146122R0000	MC512PA	117
1SNK146131R0000	MC512PA	115
1SNK146132R0000	MC512PA	117
1SNK146141R0000	MC512PA	115
1SNK146142R0000	MC512PA	117
1SNK146151R0000	MC512PA	115
1SNK146152R0000	MC512PA	117
1SNK146161R0000	MC512PA	115
1SNK146162R0000	MC512PA	117
1SNK146171R0000	MC512PA	115
1SNK146172R0000	MC512PA	117
1SNK146181R0000	MC512PA	115
1SNK146182R0000	MC512PA	117
1SNK146191R0000	MC512PA	115
1SNK146192R0000	MC512PA	117
1SNK146201R0000	MC512PA	115
1SNK146202R0000	MC512PA	117
1SNK146211R0000	MC512PA	115
1SNK146212R0000	MC512PA	117
1SNK146221R0000	MC512PA	115
1SNK146222R0000	MC512PA	117
1SNK146231R0000	MC512PA	115
1SNK146232R0000	MC512PA	117
1SNK146241R0000	MC512PA	115
1SNK146242R0000	MC512PA	117
1SNK146251R0000	MC512PA	115
1SNK146252R0000	MC512PA	117
1SNK146261R0000	MC512PA	115
1SNK146262R0000	MC512PA	117
1SNK147001R0000	MC512PA	114
1SNK147002R0000	MC512PA	116
1SNK147011R0000	MC512PA	114
1SNK147012R0000	MC512PA	116
1SNK147021R0000	MC512PA	114
1SNK147022R0000	MC512PA	116
1SNK147031R0000	MC512PA	114
1SNK147032R0000	MC512PA	116
1SNK147041R0000	MC512PA	114
1SNK147042R0000	MC512PA	116
1SNK147051R0000	MC512PA	114
1SNK147052R0000	MC512PA	116
1SNK147061R0000	MC512PA	114
1SNK147062R0000	MC512PA	116
1SNK147071R0000	MC512PA	114
1SNK147072R0000	MC512PA	116
1SNK147081R0000	MC512PA	114
1SNK147082R0000	MC512PA	116
1SNK147091R0000	MC512PA	114
1SNK147092R0000	MC512PA	116
1SNK148001R0000	MC512PA	115
1SNK148002R0000	MC512PA	117
1SNK148011R0000	MC512PA	115
1SNK148012R0000	MC512PA	117
1SNK148021R0000	MC512PA	115
1SNK148022R0000	MC512PA	117
1SNK148031R0000	MC512PA	115
1SNK148032R0000	MC512PA	117
1SNK148041R0000	MC512PA	115
1SNK148042R0000	MC512PA	117
1SNK148051R0000	MC512PA	115
1SNK148052R0000	MC512PA	117
1SNK148061R0000	MC512PA	115
1SNK148062R0000	MC512PA	117
1SNK148071R0000	MC512PA	115
1SNK148072R0000	MC512PA	117
1SNK148091R0000	MC512PA	115
1SNK148092R0000	MC512PA	117
1SNK148101R0000	MC512PA	115
1SNK148102R0000	MC512PA	117
1SNK148111R0000	MC512PA	115
1SNK148112R0000	MC512PA	117
1SNK148121R0000	MC512PA	115
1SNK148122R0000	MC512PA	117
1SNK148131R0000	MC512PA	115
1SNK148132R0000	MC512PA	117
1SNK148141R0000	MC512PA	115
1SNK148142R0000	MC512PA	117
1SNK148151R0000	MC512PA	115
1SNK148152R0000	MC512PA	117
1SNK148161R0000	MC512PA	115
1SNK148162R0000	MC512PA	117
1SNK148171R0000	MC512PA	115
1SNK148172R0000	MC512PA	117
1SNK148181R0000	MC512PA	115
1SNK148182R0000	MC512PA	117
1SNK148192R0000	MC512PA	117
1SNK148202R0000	MC512PA	117
1SNK148212R0000	MC512PA	117
1SNK148222R0000	MC512PA	117
1SNK149001R0000	MC512PA	115
1SNK149002R0000	MC512PA	117
1SNK149011R0000	MC512PA	115
1SNK149012R0000	MC512PA	117
1SNK149999R0000	MC512PA	84
1SNK150000R0000	MC612	16
1SNK150004R0000	MC612-YL	16
1SNK150011R0000	MC612PA	118
1SNK150012R0000	MC612PA	120
1SNK150021R0000	MC612PA	118
1SNK150022R0000	MC612PA	120
1SNK150031R0000	MC612PA	118
1SNK150032R0000	MC612PA	120
1SNK150041R0000	MC612PA	118
1SNK150042R0000	MC612PA	120
1SNK150051R0000	MC612PA	118
1SNK150052R0000	MC612PA	120
1SNK150061R0000	MC612PA	118
1SNK150062R0000	MC612PA	120
1SNK150071R0000	MC612PA	118
1SNK150072R0000	MC612PA	120
1SNK150081R0000	MC612PA	118
1SNK150082R0000	MC612PA	120
1SNK150083R0000	MC612PA	118
1SNK150084R0000	MC612PA	120
1SNK150091R0000	MC612PA	118
1SNK150092R0000	MC612PA	120
1SNK150101R0000	MC612PA	118
1SNK150102R0000	MC612PA	120
1SNK150111R0000	MC612PA	118
1SNK150112R0000	MC612PA	120
1SNK150121R0000	MC612PA	118
1SNK150122R0000	MC612PA	120
1SNK150131R0000	MC612PA	118
1SNK150132R0000	MC612PA	120
1SNK150141R0000	MC612PA	118
1SNK150142R0000	MC612PA	120
1SNK150151R0000	MC612PA	118
1SNK150152R0000	MC612PA	120
1SNK150161R0000	MC612PA	118
1SNK150162R0000	MC612PA	120
1SNK150171R0000	MC612PA	118
1SNK150172R0000	MC612PA	120
1SNK150181R0000	MC612PA	118
1SNK150182R0000	MC612PA	120
1SNK150191R0000	MC612PA	118
1SNK150192R0000	MC612PA	120
1SNK150201R0000	MC612PA	118
1SNK150202R0000	MC612PA	120
1SNK155011R0000	MC612PA	118
1SNK155012R0000	MC612PA	120
1SNK155021R0000	MC612PA	118
1SNK155022R0000	MC612PA	120
1SNK155031R0000	MC612PA	118
1SNK155032R0000	MC612PA	120
1SNK155041R0000	MC612PA	118
1SNK155042R0000	MC612PA	120
1SNK155051R0000	MC612PA	118
1SNK155052R0000	MC612PA	120
1SNK155061R0000	MC612PA	118
1SNK155062R0000	MC612PA	120
1SNK155071R0000	MC612PA	118
1SNK155072R0000	MC612PA	120
1SNK155081R0000	MC612PA	118
1SNK155082R0000	MC612PA	120
1SNK155091R0000	MC612PA	118
1SNK155092R0000	MC612PA	120
1SNK155102R0000	MC612PA	120
1SNK156011R0000	MC612PA	118
1SNK156012R0000	MC612PA	120
1SNK156021R0000	MC612PA	118
1SNK156022R0000	MC612PA	120
1SNK156031R0000	MC612PA	118
1SNK156032R0000	MC612PA	120
1SNK156041R0000	MC612PA	118
1SNK156042R0000	MC612PA	120
1SNK156051R0000	MC612PA	118
1SNK156052R0000	MC612PA	120
1SNK156061R0000	MC612PA	118
1SNK156062R0000	MC612PA	120
1SNK156071R0000	MC612PA	118
1SNK156072R0000	MC612PA	120
1SNK156081R0000	MC612PA	118
1SNK156082R0000	MC612PA	120
1SNK156091R0000	MC612PA	118
1SNK156092R0000	MC612PA	120
1SNK156101R0000	MC612PA	118
1SNK156102R0000	MC612PA	120
1SNK156111R0000	MC612PA	118
1SNK156112R0000	MC612PA	121
1SNK156121R0000	MC612PA	119
1SNK156122R0000	MC612PA	121

Index

Part Number classification

Part Number	Type	Page
1SNK156131R0000	MC612PA	119
1SNK156132R0000	MC612PA	121
1SNK156141R0000	MC612PA	119
1SNK156142R0000	MC612PA	121
1SNK156151R0000	MC612PA	119
1SNK156152R0000	MC612PA	121
1SNK156161R0000	MC612PA	119
1SNK156162R0000	MC612PA	121
1SNK156171R0000	MC612PA	119
1SNK156172R0000	MC612PA	121
1SNK156181R0000	MC612PA	119
1SNK156182R0000	MC612PA	121
1SNK156191R0000	MC612PA	119
1SNK156192R0000	MC612PA	121
1SNK156201R0000	MC612PA	119
1SNK156202R0000	MC612PA	121
1SNK156211R0000	MC612PA	119
1SNK156212R0000	MC612PA	121
1SNK156221R0000	MC612PA	119
1SNK156222R0000	MC612PA	121
1SNK156231R0000	MC612PA	119
1SNK156232R0000	MC612PA	121
1SNK156241R0000	MC612PA	119
1SNK156242R0000	MC612PA	121
1SNK156251R0000	MC612PA	119
1SNK156252R0000	MC612PA	121
1SNK156261R0000	MC612PA	119
1SNK156262R0000	MC612PA	121
1SNK157001R0000	MC612PA	118
1SNK157002R0000	MC612PA	120
1SNK157011R0000	MC612PA	118
1SNK157012R0000	MC612PA	120
1SNK157021R0000	MC612PA	118
1SNK157022R0000	MC612PA	120
1SNK157031R0000	MC612PA	118
1SNK157032R0000	MC612PA	120
1SNK157041R0000	MC612PA	118
1SNK157042R0000	MC612PA	120
1SNK157051R0000	MC612PA	118
1SNK157052R0000	MC612PA	120
1SNK157061R0000	MC612PA	118
1SNK157062R0000	MC612PA	120
1SNK157071R0000	MC612PA	118
1SNK157072R0000	MC612PA	120
1SNK157081R0000	MC612PA	118
1SNK157082R0000	MC612PA	120
1SNK157091R0000	MC612PA	118
1SNK157092R0000	MC612PA	120
1SNK158001R0000	MC612PA	119
1SNK158002R0000	MC612PA	121
1SNK158011R0000	MC612PA	119
1SNK158012R0000	MC612PA	121
1SNK158021R0000	MC612PA	119
1SNK158022R0000	MC612PA	121
1SNK158031R0000	MC612PA	119
1SNK158032R0000	MC612PA	121
1SNK158041R0000	MC612PA	119
1SNK158042R0000	MC612PA	121
1SNK158051R0000	MC612PA	119
1SNK158052R0000	MC612PA	121
1SNK158061R0000	MC612PA	119
1SNK158062R0000	MC612PA	121
1SNK158071R0000	MC612PA	119
1SNK158072R0000	MC612PA	121
1SNK158091R0000	MC612PA	119
1SNK158092R0000	MC612PA	121
1SNK158101R0000	MC612PA	119
1SNK158102R0000	MC612PA	121
1SNK158111R0000	MC612PA	119
1SNK158112R0000	MC612PA	121
1SNK158121R0000	MC612PA	119
1SNK158122R0000	MC612PA	121
1SNK158131R0000	MC612PA	119
1SNK158132R0000	MC612PA	121
1SNK158141R0000	MC612PA	119
1SNK158142R0000	MC612PA	121
1SNK158151R0000	MC612PA	119
1SNK158152R0000	MC612PA	121
1SNK158161R0000	MC612PA	119
1SNK158162R0000	MC612PA	121
1SNK158171R0000	MC612PA	119
1SNK158172R0000	MC612PA	121
1SNK158181R0000	MC612PA	119
1SNK158182R0000	MC612PA	121
1SNK158192R0000	MC612PA	121
1SNK158202R0000	MC612PA	121
1SNK158212R0000	MC612PA	121
1SNK158222R0000	MC612PA	121
1SNK159001R0000	MC612PA	119
1SNK159002R0000	MC612PA	121
1SNK159011R0000	MC612PA	119
1SNK159012R0000	MC612PA	121
1SNK159999R0000	MC612PA	84
1SNK160000R0000	MC812	16
1SNK160004R0000	MC812-YL	16
1SNK160011R0000	MC812PA	122
1SNK160012R0000	MC812PA	124
1SNK160021R0000	MC812PA	122
1SNK160022R0000	MC812PA	124
1SNK160031R0000	MC812PA	122
1SNK160032R0000	MC812PA	124
1SNK160041R0000	MC812PA	122
1SNK160042R0000	MC812PA	124
1SNK160051R0000	MC812PA	122
1SNK160052R0000	MC812PA	124
1SNK160061R0000	MC812PA	122
1SNK160062R0000	MC812PA	124
1SNK160071R0000	MC812PA	122
1SNK160072R0000	MC812PA	124
1SNK160081R0000	MC812PA	122
1SNK160082R0000	MC812PA	124
1SNK160083R0000	MC812PA	122
1SNK160084R0000	MC812PA	124
1SNK160091R0000	MC812PA	122
1SNK160092R0000	MC812PA	124
1SNK160101R0000	MC812PA	122
1SNK160102R0000	MC812PA	124
1SNK160111R0000	MC812PA	122
1SNK160112R0000	MC812PA	124
1SNK160121R0000	MC812PA	122
1SNK160122R0000	MC812PA	124
1SNK160131R0000	MC812PA	122
1SNK160132R0000	MC812PA	124
1SNK160141R0000	MC812PA	122
1SNK160142R0000	MC812PA	124
1SNK160151R0000	MC812PA	122
1SNK160152R0000	MC812PA	124
1SNK160161R0000	MC812PA	122
1SNK160162R0000	MC812PA	124
1SNK160171R0000	MC812PA	122
1SNK160172R0000	MC812PA	124
1SNK160181R0000	MC812PA	122
1SNK160182R0000	MC812PA	124
1SNK160191R0000	MC812PA	122
1SNK160192R0000	MC812PA	124
1SNK160201R0000	MC812PA	122
1SNK160202R0000	MC812PA	124
1SNK165011R0000	MC812PA	122
1SNK165012R0000	MC812PA	124
1SNK165021R0000	MC812PA	122
1SNK165022R0000	MC812PA	124
1SNK165031R0000	MC812PA	122
1SNK165032R0000	MC812PA	124
1SNK165041R0000	MC812PA	122
1SNK165042R0000	MC812PA	124
1SNK165051R0000	MC812PA	122
1SNK165052R0000	MC812PA	124
1SNK165061R0000	MC812PA	122
1SNK165062R0000	MC812PA	124
1SNK165071R0000	MC812PA	122
1SNK165072R0000	MC812PA	124
1SNK165081R0000	MC812PA	122
1SNK165082R0000	MC812PA	124
1SNK165091R0000	MC812PA	122
1SNK165092R0000	MC812PA	124
1SNK165102R0000	MC812PA	124
1SNK166011R0000	MC812PA	122
1SNK166012R0000	MC812PA	124
1SNK166021R0000	MC812PA	122
1SNK166022R0000	MC812PA	124
1SNK166031R0000	MC812PA	122
1SNK166032R0000	MC812PA	124
1SNK166041R0000	MC812PA	122
1SNK166042R0000	MC812PA	124
1SNK166051R0000	MC812PA	122
1SNK166052R0000	MC812PA	124
1SNK166061R0000	MC812PA	122
1SNK166062R0000	MC812PA	124
1SNK166071R0000	MC812PA	122
1SNK166072R0000	MC812PA	124
1SNK166081R0000	MC812PA	122
1SNK166082R0000	MC812PA	124
1SNK166091R0000	MC812PA	122
1SNK166092R0000	MC812PA	124
1SNK166101R0000	MC812PA	122
1SNK166102R0000	MC812PA	124
1SNK166111R0000	MC812PA	122
1SNK166112R0000	MC812PA	125
1SNK166121R0000	MC812PA	123
1SNK166122R0000	MC812PA	125
1SNK166131R0000	MC812PA	123
1SNK166132R0000	MC812PA	125
1SNK166141R0000	MC812PA	123
1SNK166142R0000	MC812PA	125
1SNK166151R0000	MC812PA	123
1SNK166152R0000	MC812PA	125
1SNK166161R0000	MC812PA	123
1SNK166162R0000	MC812PA	125
1SNK166171R0000	MC812PA	123
1SNK166172R0000	MC812PA	125
1SNK166181R0000	MC812PA	123
1SNK166182R0000	MC812PA	125
1SNK166191R0000	MC812PA	123
1SNK166192R0000	MC812PA	125
1SNK166201R0000	MC812PA	123
1SNK166202R0000	MC812PA	125
1SNK166211R0000	MC812PA	123
1SNK166212R0000	MC812PA	125
1SNK166221R0000	MC812PA	123
1SNK166222R0000	MC812PA	125
1SNK166231R0000	MC812PA	123
1SNK166232R0000	MC812PA	125
1SNK166241R0000	MC812PA	123
1SNK166242R0000	MC812PA	125
1SNK166251R0000	MC812PA	123
1SNK166252R0000	MC812PA	125
1SNK166261R0000	MC812PA	123
1SNK166262R0000	MC812PA	125
1SNK167001R0000	MC812PA	122
1SNK167002R0000	MC812PA	124
1SNK167011R0000	MC812PA	122
1SNK167012R0000	MC812PA	124
1SNK167021R0000	MC812PA	122
1SNK167022R0000	MC812PA	124
1SNK167031R0000	MC812PA	122
1SNK167032R0000	MC812PA	124
1SNK167041R0000	MC812PA	122
1SNK167042R0000	MC812PA	124
1SNK167051R0000	MC812PA	122
1SNK167052R0000	MC812PA	124
1SNK167061R0000	MC812PA	122
1SNK167062R0000	MC812PA	124
1SNK167071R0000	MC812PA	122
1SNK167072R0000	MC812PA	124
1SNK167081R0000	MC812PA	122
1SNK167082R0000	MC812PA	124
1SNK167091R0000	MC812PA	122
1SNK167092R0000	MC812PA	124
1SNK168001R0000	MC812PA	123
1SNK168002R0000	MC812PA	125
1SNK168011R0000	MC812PA	123
1SNK168012R0000	MC812PA	125
1SNK168021R0000	MC812PA	123
1SNK168022R0000	MC812PA	125
1SNK168031R0000	MC812PA	123
1SNK168032R0000	MC812PA	125
1SNK168041R0000	MC812PA	123
1SNK168042R0000	MC812PA	125
1SNK168051R0000	MC812PA	123
1SNK168052R0000	MC812PA	125
1SNK168061R0000	MC812PA	123
1SNK168062R0000	MC812PA	125
1SNK168071R0000	MC812PA	123
1SNK168072R0000	MC812PA	125
1SNK168091R0000	MC812PA	123
1SNK168092R0000	MC812PA	125
1SNK168101R0000	MC812PA	123
1SNK168102R0000	MC812PA	125
1SNK168111R0000	MC812PA	123
1SNK168112R0000	MC812PA	125
1SNK168121R0000	MC812PA	123
1SNK168122R0000	MC812PA	125
1SNK168131R0000	MC812PA	123
1SNK168132R0000	MC812PA	125
1SNK168141R0000	MC812PA	123
1SNK168142R0000	MC812PA	125
1SNK168151R0000	MC812PA	123
1SNK168152R0000	MC812PA	125
1SNK168161R0000	MC812PA	123
1SNK168162R0000	MC812PA	125
1SNK168171R0000	MC812PA	123
1SNK168172R0000	MC812PA	125
1SNK168181R0000	MC812PA	123
1SNK168182R0000	MC812PA	125
1SNK168192R0000	MC812PA	125
1SNK168202R0000	MC812PA	125
1SNK168212R0000	MC812PA	125
1SNK168222R0000	MC812PA	125
1SNK169001R0000	MC812PA	123
1SNK169002R0000	MC812PA	125
1SNK169011R0000	MC812PA	123
1SNK169012R0000	MC812PA	125
1SNK169999R0000	MC812PA	84
1SNK900605R0000	LH	21
1SNK900607R0000	LH-R1	21
1SNK900611R0000	UMH	58
1SNK900630R0000	MCLH	20
1SNK900631R0000	MCLH-R1	20
1SNK900633R0000	MCLH-YL	20
1SNK900634R0000	MCLH-R1-YL	20

Index

Type classification

Type	Part Number	Page
AMS 250 BASIC KIT	1SNA360000R2500	80
AMS CLEANER FLUID	1SNA360155R1700	81
AMS CLEANER KIT	1SNA360156R1000	81
AMS INK CARTRIDGES	1SNA360150R2600	81
AMS PEN 0.18	1SNA360103R1400	81
AMS PEN 0.25	1SNA360100R2500	81
AMS PEN 0.35	1SNA360101R1200	81
AMS PEN 0.50	1SNA360104R1500	81
AMS PEN 0.70	1SNA360105R1600	81
AMS PEN 1.00	1SNA360106R1700	81
BA4	1SNA235156R2700	33
DISPOSABLE AMS PEN 0.25	1SNA360120R1000	81
DISPOSABLE AMS PEN 0.35	1SNA360121R0500	81
DISPOSABLE AMS PEN ED-R 0.18	1SNA360124R1000	81
DISPOSABLE AMS PEN ED-R 0.25	1SNA360122R1000	81
DISPOSABLE AMS PEN ED-R 0.35	1SNA360123R0500	81
DUST COVER	1SNA360161R1500	12
EP10	1SNA163429R2100	157
EP12	1SNA163430R2600	157
EP16	1SNA163431R1300	157
EP223	1SNA173327R2400	157
EP224	1SNA173328R0500	157
EP6	1SNA163427R1700	157
EP8	1SNA163428R2000	157
EPR1	1SNA178431R2200	31
EPR2	1SNA399726R0700	22
EPU5	1SNA107033R1000	156
EPU6	1SNA107038R2500	156
HTP500-BA4	1SNA235712R2400	12
HTP500-BAS	1SNA235706R0700	12
HTP500-CLEAN	1SNA235714R2600	12
HTP500-FEED	1SNA235703R0400	12
HTP500-PL	1SNA235704R0500	12
HTP500-PL2	1SNA235705R0600	12
HTP500-PL3	1SNA235707R0000	12
HTP500-PRINT	1SNA235716R2000	12
HTP500-PW	1SNA235709R1200	12
HTP500-ROLL	1SNA235715R2700	12
HTP500-V2 KIT	1SNA235700R1500	12
HTP500-WB	1SNA235717R2100	12
HTS500	1SNA235702R0300	12
KA1-8120	1SFA616920R8120	35
KIT MAO AMS 500	1SNA360000R2400	80
LH	1SNK900605R0000	21
LH-R1	1SNK900607R0000	21
MC512	1SNK140000R0000	16
MC512PA	1SNK140011R0000	114
MC512PA	1SNK140012R0000	116
MC512PA	1SNK140021R0000	114
MC512PA	1SNK140022R0000	116
MC512PA	1SNK140031R0000	114
MC512PA	1SNK140032R0000	116
MC512PA	1SNK140041R0000	114
MC512PA	1SNK140042R0000	116
MC512PA	1SNK140051R0000	114
MC512PA	1SNK140052R0000	116
MC512PA	1SNK140061R0000	114
MC512PA	1SNK140062R0000	116
MC512PA	1SNK140071R0000	114
MC512PA	1SNK140072R0000	116
MC512PA	1SNK140081R0000	114
MC512PA	1SNK140082R0000	116
MC512PA	1SNK140083R0000	114
MC512PA	1SNK140084R0000	116
MC512PA	1SNK140091R0000	114
MC512PA	1SNK140092R0000	116
MC512PA	1SNK140101R0000	114
MC512PA	1SNK140102R0000	116
MC512PA	1SNK140111R0000	114
MC512PA	1SNK140112R0000	116
MC512PA	1SNK140121R0000	114
MC512PA	1SNK140122R0000	116
MC512PA	1SNK140131R0000	114
MC512PA	1SNK140132R0000	116
MC512PA	1SNK140141R0000	114
MC512PA	1SNK140142R0000	116
MC512PA	1SNK140151R0000	114
MC512PA	1SNK140152R0000	116
MC512PA	1SNK140161R0000	114
MC512PA	1SNK140162R0000	116
MC512PA	1SNK140171R0000	114
MC512PA	1SNK140172R0000	116
MC512PA	1SNK140181R0000	114
MC512PA	1SNK140182R0000	116
MC512PA	1SNK140191R0000	114
MC512PA	1SNK140192R0000	116
MC512PA	1SNK140201R0000	114
MC512PA	1SNK140202R0000	116
MC512PA	1SNK145011R0000	114
MC512PA	1SNK145012R0000	116
MC512PA	1SNK145021R0000	114
MC512PA	1SNK145022R0000	116
MC512PA	1SNK145031R0000	114
MC512PA	1SNK145032R0000	116
MC512PA	1SNK145041R0000	114
MC512PA	1SNK145042R0000	116
MC512PA	1SNK145051R0000	114
MC512PA	1SNK145052R0000	116
MC512PA	1SNK145061R0000	114
MC512PA	1SNK145062R0000	116
MC512PA	1SNK145071R0000	114
MC512PA	1SNK145072R0000	116
MC512PA	1SNK145081R0000	114
MC512PA	1SNK145082R0000	116
MC512PA	1SNK145091R0000	114
MC512PA	1SNK145092R0000	116
MC512PA	1SNK145102R0000	116
MC512PA	1SNK146011R0000	115
MC512PA	1SNK146012R0000	116
MC512PA	1SNK146021R0000	115
MC512PA	1SNK146022R0000	116
MC512PA	1SNK146031R0000	115
MC512PA	1SNK146032R0000	116
MC512PA	1SNK146041R0000	115
MC512PA	1SNK146042R0000	116
MC512PA	1SNK146051R0000	115
MC512PA	1SNK146052R0000	116
MC512PA	1SNK146061R0000	115
MC512PA	1SNK146062R0000	116
MC512PA	1SNK146071R0000	115
MC512PA	1SNK146072R0000	116
MC512PA	1SNK146081R0000	115
MC512PA	1SNK146082R0000	116
MC512PA	1SNK146091R0000	115
MC512PA	1SNK146092R0000	116
MC512PA	1SNK146101R0000	115
MC512PA	1SNK146102R0000	116
MC512PA	1SNK146111R0000	115
MC512PA	1SNK146112R0000	117
MC512PA	1SNK146121R0000	115
MC512PA	1SNK146122R0000	117
MC512PA	1SNK146131R0000	115
MC512PA	1SNK146132R0000	117
MC512PA	1SNK146141R0000	115
MC512PA	1SNK146142R0000	117
MC512PA	1SNK146151R0000	115
MC512PA	1SNK146152R0000	117
MC512PA	1SNK146161R0000	115
MC512PA	1SNK146162R0000	117
MC512PA	1SNK146171R0000	115
MC512PA	1SNK146172R0000	117
MC512PA	1SNK146181R0000	115
MC512PA	1SNK146182R0000	117
MC512PA	1SNK146191R0000	115
MC512PA	1SNK146192R0000	117
MC512PA	1SNK146201R0000	115
MC512PA	1SNK146202R0000	117
MC512PA	1SNK146211R0000	115
MC512PA	1SNK146212R0000	117
MC512PA	1SNK146221R0000	115
MC512PA	1SNK146222R0000	117
MC512PA	1SNK146231R0000	115
MC512PA	1SNK146232R0000	117
MC512PA	1SNK146241R0000	115
MC512PA	1SNK146242R0000	117
MC512PA	1SNK146251R0000	115
MC512PA	1SNK146252R0000	117
MC512PA	1SNK146261R0000	115
MC512PA	1SNK146262R0000	117
MC512PA	1SNK147001R0000	114
MC512PA	1SNK147002R0000	116
MC512PA	1SNK147011R0000	114
MC512PA	1SNK147012R0000	116
MC512PA	1SNK147021R0000	114
MC512PA	1SNK147022R0000	116
MC512PA	1SNK147031R0000	114
MC512PA	1SNK147032R0000	116
MC512PA	1SNK147041R0000	114
MC512PA	1SNK147042R0000	116
MC512PA	1SNK147051R0000	114
MC512PA	1SNK147052R0000	116
MC512PA	1SNK147061R0000	114
MC512PA	1SNK147062R0000	116
MC512PA	1SNK147071R0000	114
MC512PA	1SNK147072R0000	116
MC512PA	1SNK147081R0000	114
MC512PA	1SNK147082R0000	116
MC512PA	1SNK147091R0000	114
MC512PA	1SNK147092R0000	116
MC512PA	1SNK148001R0000	115
MC512PA	1SNK148002R0000	117
MC512PA	1SNK148011R0000	115
MC512PA	1SNK148012R0000	117
MC512PA	1SNK148021R0000	115
MC512PA	1SNK148022R0000	117
MC512PA	1SNK148031R0000	115
MC512PA	1SNK148032R0000	117
MC512PA	1SNK148041R0000	115
MC512PA	1SNK148042R0000	117
MC512PA	1SNK148051R0000	115
MC512PA	1SNK148052R0000	117
MC512PA	1SNK148061R0000	115
MC512PA	1SNK148062R0000	117
MC512PA	1SNK148071R0000	115
MC512PA	1SNK148072R0000	117
MC512PA	1SNK148091R0000	115
MC512PA	1SNK148092R0000	117
MC512PA	1SNK148101R0000	115
MC512PA	1SNK148102R0000	117
MC512PA	1SNK148111R0000	115
MC512PA	1SNK148112R0000	117
MC512PA	1SNK148121R0000	115
MC512PA	1SNK148122R0000	117
MC512PA	1SNK148131R0000	115
MC512PA	1SNK148132R0000	117
MC512PA	1SNK148141R0000	115
MC512PA	1SNK148142R0000	117
MC512PA	1SNK148151R0000	115
MC512PA	1SNK148152R0000	117
MC512PA	1SNK148161R0000	115
MC512PA	1SNK148162R0000	117
MC512PA	1SNK148171R0000	115
MC512PA	1SNK148172R0000	117
MC512PA	1SNK148181R0000	115
MC512PA	1SNK148182R0000	117
MC512PA	1SNK148192R0000	117
MC512PA	1SNK148202R0000	117
MC512PA	1SNK148212R0000	117
MC512PA	1SNK148222R0000	117
MC512PA	1SNK149001R0000	115
MC512PA	1SNK149002R0000	117
MC512PA	1SNK149011R0000	115
MC512PA	1SNK149012R0000	117
MC512PA	1SNK149999R0000	84
MC512-YL	1SNK140004R0000	16
MC612	1SNK150000R0000	16
MC612PA	1SNK150011R0000	118
MC612PA	1SNK150012R0000	120
MC612PA	1SNK150021R0000	118
MC612PA	1SNK150022R0000	120
MC612PA	1SNK150031R0000	118
MC612PA	1SNK150032R0000	120
MC612PA	1SNK150041R0000	118
MC612PA	1SNK150042R0000	120
MC612PA	1SNK150051R0000	118
MC612PA	1SNK150052R0000	120
MC612PA	1SNK150061R0000	118
MC612PA	1SNK150062R0000	120
MC612PA	1SNK150071R0000	118
MC612PA	1SNK150072R0000	120
MC612PA	1SNK150081R0000	118
MC612PA	1SNK150082R0000	120
MC612PA	1SNK150083R0000	118
MC612PA	1SNK150084R0000	120
MC612PA	1SNK150091R0000	118
MC612PA	1SNK150092R0000	120
MC612PA	1SNK150101R0000	118
MC612PA	1SNK150102R0000	120
MC612PA	1SNK150111R0000	118
MC612PA	1SNK150112R0000	120
MC612PA	1SNK150121R0000	118
MC612PA	1SNK150122R0000	120
MC612PA	1SNK150131R0000	118
MC612PA	1SNK150132R0000	120
MC612PA	1SNK150141R0000	118
MC612PA	1SNK150142R0000	120
MC612PA	1SNK150151R0000	118
MC612PA	1SNK150152R0000	120
MC612PA	1SNK150161R0000	118
MC612PA	1SNK150162R0000	120
MC612PA	1SNK150171R0000	118
MC612PA	1SNK150172R0000	120
MC612PA	1SNK150181R0000	118
MC612PA	1SNK150182R0000	120
MC612PA	1SNK150191R0000	118
MC612PA	1SNK150192R0000	120
MC612PA	1SNK150201R0000	118
MC612PA	1SNK150202R0000	120
MC612PA	1SNK155011R0000	118
MC612PA	1SNK155012R0000	120
MC612PA	1SNK155021R0000	118
MC612PA	1SNK155022R0000	120
MC612PA	1SNK155031R0000	118
MC612PA	1SNK155032R0000	120
MC612PA	1SNK155041R0000	118
MC612PA	1SNK155042R0000	120
MC612PA	1SNK155051R0000	118
MC612PA	1SNK155052R0000	120
MC612PA	1SNK155061R0000	118
MC612PA	1SNK155062R0000	120
MC612PA	1SNK155071R0000	118
MC612PA	1SNK155072R0000	120
MC612PA	1SNK155081R0000	118
MC612PA	1SNK155082R0000	120
MC612PA	1SNK155091R0000	118

Index
Type classification

Type	Part Number	Page
MC612PA	1SNK155092R0000	120
MC612PA	1SNK155102R0000	120
MC612PA	1SNK156011R0000	118
MC612PA	1SNK156012R0000	120
MC612PA	1SNK156021R0000	118
MC612PA	1SNK156022R0000	120
MC612PA	1SNK156031R0000	118
MC612PA	1SNK156032R0000	120
MC612PA	1SNK156041R0000	118
MC612PA	1SNK156042R0000	120
MC612PA	1SNK156051R0000	118
MC612PA	1SNK156052R0000	120
MC612PA	1SNK156061R0000	118
MC612PA	1SNK156062R0000	120
MC612PA	1SNK156071R0000	118
MC612PA	1SNK156072R0000	120
MC612PA	1SNK156081R0000	118
MC612PA	1SNK156082R0000	120
MC612PA	1SNK156091R0000	118
MC612PA	1SNK156092R0000	120
MC612PA	1SNK156101R0000	118
MC612PA	1SNK156102R0000	120
MC612PA	1SNK156111R0000	118
MC612PA	1SNK156112R0000	121
MC612PA	1SNK156121R0000	119
MC612PA	1SNK156122R0000	121
MC612PA	1SNK156131R0000	119
MC612PA	1SNK156132R0000	121
MC612PA	1SNK156141R0000	119
MC612PA	1SNK156142R0000	121
MC612PA	1SNK156151R0000	119
MC612PA	1SNK156152R0000	121
MC612PA	1SNK156161R0000	119
MC612PA	1SNK156162R0000	121
MC612PA	1SNK156171R0000	119
MC612PA	1SNK156172R0000	121
MC612PA	1SNK156181R0000	119
MC612PA	1SNK156182R0000	121
MC612PA	1SNK156191R0000	119
MC612PA	1SNK156192R0000	121
MC612PA	1SNK156201R0000	119
MC612PA	1SNK156202R0000	121
MC612PA	1SNK156211R0000	119
MC612PA	1SNK156212R0000	121
MC612PA	1SNK156221R0000	119
MC612PA	1SNK156222R0000	121
MC612PA	1SNK156231R0000	119
MC612PA	1SNK156232R0000	121
MC612PA	1SNK156241R0000	119
MC612PA	1SNK156242R0000	121
MC612PA	1SNK156251R0000	119
MC612PA	1SNK156252R0000	121
MC612PA	1SNK156261R0000	119
MC612PA	1SNK156262R0000	121
MC612PA	1SNK157001R0000	118
MC612PA	1SNK157002R0000	120
MC612PA	1SNK157011R0000	118
MC612PA	1SNK157012R0000	120
MC612PA	1SNK157021R0000	118
MC612PA	1SNK157022R0000	120
MC612PA	1SNK157031R0000	118
MC612PA	1SNK157032R0000	120
MC612PA	1SNK157041R0000	118
MC612PA	1SNK157042R0000	120
MC612PA	1SNK157051R0000	118
MC612PA	1SNK157052R0000	120
MC612PA	1SNK157061R0000	118
MC612PA	1SNK157062R0000	120
MC612PA	1SNK157071R0000	118
MC612PA	1SNK157072R0000	120
MC612PA	1SNK157081R0000	118
MC612PA	1SNK157082R0000	120
MC612PA	1SNK157091R0000	118
MC612PA	1SNK157092R0000	120
MC612PA	1SNK158001R0000	119
MC612PA	1SNK158002R0000	121
MC612PA	1SNK158011R0000	119
MC612PA	1SNK158012R0000	121
MC612PA	1SNK158021R0000	119
MC612PA	1SNK158022R0000	121
MC612PA	1SNK158031R0000	119
MC612PA	1SNK158032R0000	121
MC612PA	1SNK158041R0000	119
MC612PA	1SNK158042R0000	121
MC612PA	1SNK158051R0000	119
MC612PA	1SNK158052R0000	121
MC612PA	1SNK158061R0000	119
MC612PA	1SNK158062R0000	121
MC612PA	1SNK158071R0000	119
MC612PA	1SNK158072R0000	121
MC612PA	1SNK158091R0000	119
MC612PA	1SNK158092R0000	121
MC612PA	1SNK158101R0000	119
MC612PA	1SNK158102R0000	121
MC612PA	1SNK158111R0000	119
MC612PA	1SNK158112R0000	121
MC612PA	1SNK158121R0000	119
MC612PA	1SNK158122R0000	121
MC612PA	1SNK158131R0000	119
MC612PA	1SNK158132R0000	121
MC612PA	1SNK158141R0000	119
MC612PA	1SNK158142R0000	121
MC612PA	1SNK158151R0000	119
MC612PA	1SNK158152R0000	121
MC612PA	1SNK158161R0000	119
MC612PA	1SNK158162R0000	121
MC612PA	1SNK158171R0000	119
MC612PA	1SNK158172R0000	121
MC612PA	1SNK158181R0000	119
MC612PA	1SNK158182R0000	121
MC612PA	1SNK158192R0000	121
MC612PA	1SNK158202R0000	121
MC612PA	1SNK158212R0000	121
MC612PA	1SNK158222R0000	121
MC612PA	1SNK159001R0000	119
MC612PA	1SNK159002R0000	121
MC612PA	1SNK159011R0000	119
MC612PA	1SNK159012R0000	121
MC612PA	1SNK159999R0000	84
MC612-YL	1SNK150004R0000	16
MC812	1SNK160000R0000	16
MC812PA	1SNK160011R0000	122
MC812PA	1SNK160012R0000	124
MC812PA	1SNK160021R0000	122
MC812PA	1SNK160022R0000	124
MC812PA	1SNK160031R0000	122
MC812PA	1SNK160032R0000	124
MC812PA	1SNK160041R0000	122
MC812PA	1SNK160042R0000	124
MC812PA	1SNK160051R0000	122
MC812PA	1SNK160052R0000	124
MC812PA	1SNK160061R0000	122
MC812PA	1SNK160062R0000	124
MC812PA	1SNK160071R0000	122
MC812PA	1SNK160072R0000	124
MC812PA	1SNK160081R0000	122
MC812PA	1SNK160082R0000	124
MC812PA	1SNK160083R0000	122
MC812PA	1SNK160084R0000	124
MC812PA	1SNK160091R0000	122
MC812PA	1SNK160092R0000	124
MC812PA	1SNK160101R0000	122
MC812PA	1SNK160102R0000	124
MC812PA	1SNK160111R0000	122
MC812PA	1SNK160112R0000	124
MC812PA	1SNK160121R0000	122
MC812PA	1SNK160122R0000	124
MC812PA	1SNK160131R0000	122
MC812PA	1SNK160132R0000	124
MC812PA	1SNK160141R0000	122
MC812PA	1SNK160142R0000	124
MC812PA	1SNK160151R0000	122
MC812PA	1SNK160152R0000	124
MC812PA	1SNK160161R0000	122
MC812PA	1SNK160162R0000	124
MC812PA	1SNK160171R0000	122
MC812PA	1SNK160172R0000	124
MC812PA	1SNK160181R0000	122
MC812PA	1SNK160182R0000	124
MC812PA	1SNK160191R0000	122
MC812PA	1SNK160192R0000	124
MC812PA	1SNK160201R0000	122
MC812PA	1SNK160202R0000	124
MC812PA	1SNK165011R0000	122
MC812PA	1SNK165012R0000	124
MC812PA	1SNK165021R0000	122
MC812PA	1SNK165022R0000	124
MC812PA	1SNK165031R0000	122
MC812PA	1SNK165032R0000	124
MC812PA	1SNK165041R0000	122
MC812PA	1SNK165042R0000	124
MC812PA	1SNK165051R0000	122
MC812PA	1SNK165052R0000	124
MC812PA	1SNK165061R0000	122
MC812PA	1SNK165062R0000	124
MC812PA	1SNK165071R0000	122
MC812PA	1SNK165072R0000	124
MC812PA	1SNK165081R0000	122
MC812PA	1SNK165082R0000	124
MC812PA	1SNK165091R0000	122
MC812PA	1SNK165092R0000	124
MC812PA	1SNK165102R0000	124
MC812PA	1SNK166011R0000	122
MC812PA	1SNK166012R0000	124
MC812PA	1SNK166021R0000	122
MC812PA	1SNK166022R0000	124
MC812PA	1SNK166031R0000	122
MC812PA	1SNK166032R0000	124
MC812PA	1SNK166041R0000	122
MC812PA	1SNK166042R0000	124
MC812PA	1SNK166051R0000	122
MC812PA	1SNK166052R0000	124
MC812PA	1SNK166061R0000	122
MC812PA	1SNK166062R0000	124
MC812PA	1SNK166071R0000	122
MC812PA	1SNK166072R0000	124
MC812PA	1SNK166081R0000	122
MC812PA	1SNK166082R0000	124
MC812PA	1SNK166091R0000	122
MC812PA	1SNK166092R0000	124
MC812PA	1SNK166101R0000	122
MC812PA	1SNK166102R0000	124
MC812PA	1SNK166111R0000	122
MC812PA	1SNK166112R0000	125
MC812PA	1SNK166121R0000	123
MC812PA	1SNK166122R0000	125
MC812PA	1SNK166131R0000	123
MC812PA	1SNK166132R0000	125
MC812PA	1SNK166141R0000	123
MC812PA	1SNK166142R0000	125
MC812PA	1SNK166151R0000	123
MC812PA	1SNK166152R0000	125
MC812PA	1SNK166161R0000	123
MC812PA	1SNK166162R0000	125
MC812PA	1SNK166171R0000	123
MC812PA	1SNK166172R0000	125
MC812PA	1SNK166181R0000	123
MC812PA	1SNK166182R0000	125
MC812PA	1SNK166191R0000	123
MC812PA	1SNK166192R0000	125
MC812PA	1SNK166201R0000	123
MC812PA	1SNK166202R0000	125
MC812PA	1SNK166211R0000	123
MC812PA	1SNK166212R0000	125
MC812PA	1SNK166221R0000	123
MC812PA	1SNK166222R0000	125
MC812PA	1SNK166231R0000	123
MC812PA	1SNK166232R0000	125
MC812PA	1SNK166241R0000	123
MC812PA	1SNK166242R0000	125
MC812PA	1SNK166251R0000	123
MC812PA	1SNK166252R0000	125
MC812PA	1SNK166261R0000	123
MC812PA	1SNK166262R0000	125
MC812PA	1SNK167001R0000	122
MC812PA	1SNK167002R0000	124
MC812PA	1SNK167011R0000	122
MC812PA	1SNK167012R0000	124
MC812PA	1SNK167021R0000	122
MC812PA	1SNK167022R0000	124
MC812PA	1SNK167031R0000	122
MC812PA	1SNK167032R0000	124
MC812PA	1SNK167041R0000	122
MC812PA	1SNK167042R0000	124
MC812PA	1SNK167051R0000	122
MC812PA	1SNK167052R0000	124
MC812PA	1SNK167061R0000	122
MC812PA	1SNK167062R0000	124
MC812PA	1SNK167071R0000	122
MC812PA	1SNK167072R0000	124
MC812PA	1SNK167081R0000	122
MC812PA	1SNK167082R0000	124
MC812PA	1SNK167091R0000	122
MC812PA	1SNK167092R0000	124
MC812PA	1SNK168001R0000	123
MC812PA	1SNK168002R0000	125
MC812PA	1SNK168011R0000	123
MC812PA	1SNK168012R0000	125
MC812PA	1SNK168021R0000	123
MC812PA	1SNK168022R0000	125
MC812PA	1SNK168031R0000	123
MC812PA	1SNK168032R0000	125
MC812PA	1SNK168041R0000	123
MC812PA	1SNK168042R0000	125
MC812PA	1SNK168051R0000	123
MC812PA	1SNK168052R0000	125
MC812PA	1SNK168061R0000	123
MC812PA	1SNK168062R0000	125
MC812PA	1SNK168071R0000	123
MC812PA	1SNK168072R0000	125
MC812PA	1SNK168091R0000	123
MC812PA	1SNK168092R0000	125
MC812PA	1SNK168101R0000	123
MC812PA	1SNK168102R0000	125
MC812PA	1SNK168111R0000	123
MC812PA	1SNK168112R0000	125
MC812PA	1SNK168121R0000	123
MC812PA	1SNK168122R0000	125
MC812PA	1SNK168131R0000	123
MC812PA	1SNK168132R0000	125
MC812PA	1SNK168141R0000	123
MC812PA	1SNK168142R0000	125
MC812PA	1SNK168151R0000	123
MC812PA	1SNK168152R0000	125
MC812PA	1SNK168161R0000	123

Index
Type classification

Type	Part Number	Page
MC812PA	1SNK168162R0000	125
MC812PA	1SNK168171R0000	123
MC812PA	1SNK168172R0000	125
MC812PA	1SNK168181R0000	123
MC812PA	1SNK168182R0000	125
MC812PA	1SNK168192R0000	125
MC812PA	1SNK168202R0000	125
MC812PA	1SNK168212R0000	125
MC812PA	1SNK168222R0000	125
MC812PA	1SNK169001R0000	123
MC812PA	1SNK169002R0000	125
MC812PA	1SNK169011R0000	123
MC812PA	1SNK169012R0000	125
MC812PA	1SNK169999R0000	84
MC812-YL	1SNK160004R0000	16
MCLH	1SNK900630R0000	20
MCLH-R1	1SNK900631R0000	20
MCLH-R1-YL	1SNK900634R0000	20
MCLH-YL	1SNK900633R0000	20
MG-17.5-A 990824	1SNB990824R0015	66
MG-17.5-A 990826	1SNB990826R0015	66
MG2-ABM 991012	1SNB991012R0000	43
MG2-CKP 991670	1SNB991670R0000	43
MG2-CTB 991006	1SNB991006R0000	43
MG2-ETB 991016	1SNB991016R0000	43
MG2-ETR 991600	1SNB991600R0000	43
MG2-ETR 991601	1SNB991601R0000	43
MG2-ETR 991602	1SNB991602R0000	43
MG2-ETR 991603	1SNB991603R0000	43
MG2-ETR 991606	1SNB991606R0000	43
MG2-LTB 991013	1SNB991013R0000	43
MG2-MTB 991008	1SNB991008R0000	43
MG2-PLT 991002	1SNB991002R0000	43
MG2-PTD 991007	1SNB991007R0000	43
MG2-PTM 991010	1SNB991010R0000	43
MG2-PWC 991000	1SNB991000R0000	43
MG2-QTB 991011	1SNB991011R0000	43
MG2-STB 991005	1SNB991005R0000	43
MG2-TCT 991562	1SNB991562R0000	43
MG2-TDMO-01 40340	1SNB040340R0412	57
MG2-TDMO-01 40341	1SNB040341R0416	57
MG2-TDMO-01 40390	1SNB040390R0412	57
MG2-TDMO-01 40391	1SNB040391R0416	57
MG2-TDMO-02 40440	1SNB040440R0412	57
MG2-TDMO-02 40441	1SNB040441R0416	57
MG2-TDMO-02 40490	1SNB040490R0412	57
MG2-TDMO-02 40491	1SNB040491R0416	57
MG2-TDMO-03 40540	1SNB040540R0412	57
MG2-TDMO-03 40541	1SNB040541R0416	57
MG2-TDMO-03 40590	1SNB040590R0412	57
MG2-TDMO-03 40591	1SNB040591R0416	57
MG2-TGT 991532	1SNB991532R0000	43
MG2-TLT 991522	1SNB991522R0000	43
MG2-TMT 991513	1SNB991513R0000	43
MG2-TST 991552	1SNB991552R0000	43
MG2-TTB 991512	1SNB991512R0000	43
MG2-TTD 991563	1SNB991563R0000	43
MG2-TWC 991502	1SNB991502R0000	43
MG2-TWT 991542	1SNB991542R0000	43
MG2-WTB 991004	1SNB991004R0000	43
MG3 KIT	1SNB419001R0000	43
MG-CPM-01 41090	1SNB041090R0510	48
MG-CPM-01 41091	1SNB041091R0515	48
MG-CPM-01 41094	1SNB041094R0507	46
MG-CPM-02 41140	1SNB041140R0510	48
MG-CPM-02 41190	1SNB041190R0510	48
MG-CPM-03 41291	1SNB041291R0510	46
MG-CPM-03 41293	1SNB041293R0510	48
MG-CPM-04 41340	1SNB041340R0510	46
MG-CPM-04 41390	1SNB041390R0510	46
MG-CPM-04 41391	1SNB041391R0610	46
MG-CPM-04 41395	1SNB041395R0510	48
MG-CPM-05 41490	1SNB041490R0510	46
MG-CPM-05 41494	1SNB041494R0510	48
MG-CPM-06 41591	1SNB041591R0510	48
MG-CPM-07 41691	1SNB041691R0510	49
MG-CPM-09 41890	1SNB041890R0510	49
MG-CPM-10 46192	1SNB046192R0512	49
MG-CPM-12 46390	1SNB046390R4209	46
MG-CPM-12 46391	1SNB046391R4206	49
MG-CPM-13 41740	1SNB041740R0512	46
MG-CPM-13 41741	1SNB041741R0612	46
MG-CPM-13 41790	1SNB041790R0512	46
MG-CPM-13 41791	1SNB041791R0612	46
MG-CPMF 43090	1SNB043090R0010	47
MG-CPMF 43091	1SNB043091R0076	47
MG-CPMF 43094	1SNB043094R0052	47
MG-CPMFA 43146	1SNB043146R0012	47
MG-CPMFA 43196	1SNB043196R0012	47
MG-CPMFA 46990	1SNB046990R0010	47
MG-ETF 54142	1SNB054142R1357	59
MG-ETF 54192	1SNB054192R1357	59
MG-PLC 71000	1SNB071000R0017	73
MG-PLC 71001	1SNB071001R0022	73
MG-PLC 71002	1SNB071002R0012	73
MG-PLC 71040	1SNB071040R0017	73
MG-PLC 71041	1SNB071041R0022	73
MG-PLC 71042	1SNB071042R0012	73
MG-PLC 71044	1SNB071044R0025	73
MG-PLC 71050	1SNB071050R0017	73
MG-PLC 71051	1SNB071051R0022	73
MG-PLC 71052	1SNB071052R0012	73
MG-PLC 71090	1SNB071090R0017	73
MG-PLC 71091	1SNB071091R0022	73
MG-PLC 71092	1SNB071092R0012	73
MG-PLC 71094	1SNB071094R0025	73
MG-PTS 15090	1SNB015090R4030	67
MG-TAA 49143N	1SNB049143R1527	64
MG-TAA 49144N	1SNB049144R1549	64
MG-TAA 49145N	1SNB049145R1567	64
MG-TAA 49148	1SNB049148R1735	64
MG-TAA 49190N	1SNB049190N0920	64
MG-TAA 49191N	1SNB049191R0935	64
MG-TAA 49193N	1SNB049193R1527	64
MG-TAA 49194N	1SNB049194R1549	64
MG-TAA 49195N	1SNB049195R1567	64
MG-TAA 49196	1SNB049196R0720	64
MG-TAA 49198	1SNB049198R1735	64
MG-TAA 49298	1SNB049298R1544	64
MG-TAA 49397N	1SNB049397R0915	64
MG-TAA 49448	1SNB049448R8530	64
MG-TAA 49493	1SNB049493R0817	64
MG-TAA 49498	1SNB049498R8530	64
MG-TAP 47041N	1SNB047041R1527	68
MG-TAP 47047	1SNB047047R1827	68
MG-TAP 47091N	1SNB047091R1527	68
MG-TAP 47092N	1SNB047092R1549	68
MG-TAP 47093N	1SNB047093R1567	68
MG-TAP 47096	1SNB047096R0827	68
MG-TAP 47097	1SNB047097R1827	68
MG-TAP 47198	1SNB047198R1543	68
MG-TAP-CCS 990513	1SNB990513R1549	71
MG-TAP-CCS 990514	1SNB990514R1567	71
MG-TAPW 49040N	1SNB049040R0920	70
MG-TAPW 49042N	1SNB049042R0912	70
MG-TAPW 49043N	1SNB049043R0915	70
MG-TAPW 49046	1SNB049046R0929	70
MG-TAPW 49090N	1SNB049090R0920	70
MG-TAPW 49091N	1SNB049091R0935	70
MG-TAPW 49093N	1SNB049093R0915	70
MG-TAPW 49096	1SNB049096R0929	70
MG-TAR 45194	1SNB045194R1735	72
MG-TAR 45195	1SNB045195R1744	72
MG-TDM-01 40140	1SNB040140R0412	56
MG-TDM-01 40141	1SNB040141R0416	56
MG-TDM-01 40190	1SNB040190R0412	56
MG-TDM-01 40191	1SNB040191R0416	56
MG-TDM-02 40240	1SNB040240R0412	56
MG-TDM-02 40241	1SNB040241R0416	56
MG-TDM-02 40290	1SNB040290R0412	56
MG-TDM-02 40291	1SNB040291R0416	56
MG-TPM 40090	1SNB040090R0410	60
MG-TPM 40091	1SNB040091R0412	60
MG-TPM 40092	1SNB040092R0415	60
MG-TPMF 42090B	1SNB042090R0410	62
MG-TPMF 42091B	1SNB042091R0412	62
MG-TPMF 42092B	1SNB042092R0415	62
MG-VRT-A 88903	1SNB088903R0052	74
MG-VRT-R 48903	1SNB048903R0052	74
MG-VYT 44845	1SNB044845R0915	65
MG-VYT 44895	1SNB044895R0915	65
MG-VYT 44896N	1SNB044896R0920	65
MG-VYT 46415	1SNB046415R0615	65
MG-VYT 46423	1SNB046423R0817	65
MG-VYT 46811	1SNB046811R0052	65
MG-VYT 46815	1SNB046815R0615	65
MG-VYT 46823	1SNB046823R0817	65
MG-VYT 46824	1SNB046824R0821	65
MG-VYT 46828	1SNB046828R0715	65
MG-VYT 46891	1SNB046891R0710	65
MG-VYT 46896N	1SNB046896R0920	65
MG-VYT 46910N	1SNB046910R0935	65
MG-VYT 46915	1SNB046915R0615	65
MG-VYT 46923	1SNB046923R0817	65
MG-VYT 46927	1SNB046927R0512	65
MG-VYT 46935	1SNB046935R0720	65
PAM100015	1SNA235146R2500	35
PAM21515	1SNA235103R2300	32
PAM21520	1SNA235105R2500	32
PAM43015	1SNA235104R2400	32
PAM43020	1SNA235106R2600	32
PAT10060	1SNA235114R1500	36
PCGS209	1SNA235150R0500	28
PCT100015	1SNA235147R2600	35
PEAD	1SNA399719R1000	22
PEB	1SNA113077R1100	31
PEBM	1SNA113084R0100	31
PEH	1SNA163211R2600	95
PEN HOLDER	1SNA360098R1200	81
PETC 51	1SNA168737R0200	103
PETC 53	1SNA168741R1600	103
PETC 56	1SNA168747R1400	103
PEV	1SNA113180R1200	89
PIB	1SNA173812R1300	96
PIB2	1SNA235461R2100	104
PIB2-TT	1SNA235155R2600	30
PIB2-TT-YL	1SNA235157R2000	30
PIB3	1SNA235462R2200	96
PM-01 50100	1SNB050100R0000	61
PM-01 50102	1SNB050102R0001	61
PM-01 50102-HF	1SNB050102R0002	61
PM-01 50110	1SNB050110R0000	61
PM-01 50120	1SNB050120R0000	61
PM-01 50122	1SNB050122R0000	61
PM-02 50200	1SNB050200R0000	61
PM-02 50202	1SNB050202R0000	61
PM-02 50210	1SNB050210R0000	61
PM-02 50212	1SNB050212R0000	61
PM-02 50220	1SNB050220R0000	61
PM-02 50222	1SNB050222R0000	61
PM-03 50300	1SNB050300R0000	61
PM-03 50302	1SNB050302R0000	61
PM-03 50310	1SNB050310R0000	61
PM-03 50312	1SNB050312R0000	61
PM-03 50320	1SNB050320R0000	61
PM-03 50322	1SNB050322R0000	61
PM-04 50400	1SNB050400R0000	61
PM-04 50402	1SNB050402R0000	61
PM-04 50410	1SNB050410R0000	61
PM-04 50411	1SNB050411R0000	61
PM-04 50420	1SNB050420R0000	61
PM-04 50421	1SNB050421R0000	61
PM-05 50500	1SNB050500R0000	61
PM-05 50510	1SNB050510R0000	61
PM-05 50521	1SNB050521R0000	61
PM-06 50600	1SNB050600R0000	61
PM-06 50610	1SNB050610R0000	61
PM-06 50620	1SNB050620R0000	61
PM-AC 51000N	1SNB051000R0000	61
PM-AC 51010N	1SNB051010R0000	61
PM-AC 51020N	1SNB051020R0000	61
PM-ET 53010	1SNB053010R0000	61
PM-ET 53020	1SNB053020R0000	61
PMF-00 90000	1SNB090000R0000	63
PMF-00 90010	1SNB090010R0000	63
PMF-00 90020	1SNB090020R0000	63
PMF-01 90100	1SNB090100R0000	63
PMF-01 90110	1SNB090110R0000	63
PMF-01 90120	1SNB090120R0000	63
PMF-02 90200	1SNB090200R0000	63
PMF-02 90210	1SNB090210R0000	63
PMF-02 90220	1SNB090220R0000	63
PMF-03 90300	1SNB090300R0000	63
PMF-03 90310	1SNB090310R0000	63
PMF-03 90320	1SNB090320R0000	63
PMF-04 90400	1SNB090400R0000	63
PMF-04 90410	1SNB090410R0000	63
PMF-04 90420	1SNB090420R0000	63
PMF-05 90500	1SNB090500R0000	63
PMF-05 90510	1SNB090510R0000	63
PMF-05 90520	1SNB090520R0000	63
PMF-AC 66000N	1SNB066000R0000	63
PMF-AC 66010N	1SNB066010R0000	63
PMF-AC 66020N	1SNB066020R0000	63
PMF-AC 66040N	1SNB066040R0000	63
PMF-ET 63020	1SNB063020R0000	63
PPB2715	1SNA235111R1200	34
PPT12030	1SNA235115R1600	36
PPT18050	1SNA235116R1700	36
PSP5015	1SNA235109R0100	105
RB-12W7	1SNA290455R0700	88
RC1010	1SNA238000R1600	85
RC1010	1SNA238001R0300	142
RC1010	1SNA238002R0400	142
RC1010	1SNA238003R0500	142
RC1010	1SNA238004R0600	142
RC1010	1SNA238005R0700	142
RC1010	1SNA238006R0000	142
RC1010	1SNA238007R0100	142
RC1010	1SNA238008R1200	142
RC1010	1SNA238009R1300	142
RC1010	1SNA238010R0700	142
RC1010	1SNA238011R2400	142
RC1010	1SNA238012R2500	142
RC1010	1SNA238013R2600	142
RC1010	1SNA238014R2700	142
RC1010	1SNA238015R2000	142
RC1010	1SNA238016R2100	142
RC1010	1SNA238017R2200	142
RC1010	1SNA238018R0300	142
RC1010	1SNA238019R0400	142
RC1010	1SNA238020R0100	142
RC1010	1SNA238021R2600	142
RC1010	1SNA238022R2700	142
RC1010	1SNA238023R2000	142

Index
Type classification

Type	Part Number	Page
RC1010	1SNA238024R2100	142
RC1010	1SNA238025R2200	142
RC1010	1SNA238026R2300	142
RC1010	1SNA238030R0300	142
RC1010	1SNA238031R2000	142
RC1010	1SNA238032R2100	142
RC1010	1SNA238033R2200	142
RC1010	1SNA238034R2300	142
RC1010	1SNA238035R2400	142
RC1010	1SNA238036R2500	142
RC1010	1SNA238037R2600	142
RC1010	1SNA238038R0700	142
RC1010	1SNA238039R0000	142
RC1010	1SNA238040R1500	142
RC1010	1SNA238041R0200	142
RC1010	1SNA238050R1700	143
RC1010	1SNA238051R0400	143
RC1010	1SNA238052R0500	143
RC1010	1SNA238053R0600	143
RC1010	1SNA238054R0700	143
RC1010	1SNA238055R0000	143
RC1010	1SNA238056R0100	143
RC1010	1SNA238057R0200	143
RC1010	1SNA238058R1300	143
RC1010	1SNA238059R1400	143
RC1010	1SNA238060R1100	143
RC1010	1SNA238061R0600	143
RC1010	1SNA238062R0700	143
RC1010	1SNA238063R0000	143
RC1010	1SNA238064R0100	143
RC1010	1SNA238065R0200	143
RC1010	1SNA238066R0300	143
RC1010	1SNA238067R0400	143
RC1010	1SNA238068R1500	143
RC1010	1SNA238069R1600	143
RC1010	1SNA238070R1300	143
RC1010	1SNA238071R0000	143
RC1010	1SNA238072R0100	143
RC1010	1SNA238073R0200	143
RC1010	1SNA238074R0300	143
RC1010	1SNA238075R0400	143
RC1010	1SNA238080R0600	143
RC1010	1SNA238081R2300	143
RC1010	1SNA238082R2400	143
RC1010	1SNA238083R2500	143
RC1010	1SNA238084R2600	143
RC1010	1SNA238085R2700	143
RC1010	1SNA238086R2000	143
RC1010	1SNA238087R2100	143
RC1010	1SNA238088R0200	143
RC410	1SNA229000R1500	85
RC410	1SNA229001R0200	126
RC410	1SNA229002R0300	126
RC410	1SNA229003R0400	126
RC410	1SNA229004R0500	126
RC410	1SNA229005R0600	126
RC410	1SNA229006R0700	126
RC410	1SNA229007R0000	126
RC410	1SNA229008R1100	126
RC410	1SNA229009R1200	126
RC410	1SNA229010R0600	126
RC410	1SNA229011R2300	126
RC410	1SNA229030R0200	126
RC410	1SNA229040R1400	128
RC410	1SNA229041R0100	128
RC410	1SNA229042R0200	128
RC410	1SNA229043R0300	128
RC410	1SNA229044R0400	128
RC410	1SNA229045R0500	128
RC410	1SNA229046R0600	128
RC410	1SNA229047R0700	128
RC410	1SNA229048R1000	128
RC410	1SNA229049R1100	128
RC410	1SNA229050R1600	128
RC410	1SNA229051R0300	128
RC410	1SNA229052R0400	128
RC410	1SNA229053R0500	128
RC410	1SNA229054R0600	128
RC410	1SNA229055R0700	128
RC410	1SNA229056R0000	128
RC410	1SNA229057R0100	128
RC410	1SNA229058R1200	128
RC410	1SNA229059R1300	128
RC410	1SNA229060R1000	128
RC410	1SNA229061R0500	128
RC410	1SNA229062R0600	128
RC410	1SNA229063R0700	128
RC410	1SNA229064R0000	128
RC410	1SNA229065R0100	128
RC410	1SNA229066R0200	128
RC410	1SNA229067R0300	128
RC410	1SNA229068R1400	128
RC410	1SNA229069R1500	128
RC410	1SNA229072R0000	128
RC410	1SNA229111R2400	127
RC410	1SNA229112R2500	127
RC410	1SNA229113R2600	127
RC410	1SNA229114R2700	127
RC410	1SNA229115R2000	127
RC410	1SNA229150R1700	127
RC410	1SNA229151R0400	127
RC410	1SNA229152R0500	127
RC410	1SNA229153R0600	127
RC410	1SNA229154R0700	127
RC410	1SNA229155R0000	127
RC410	1SNA229156R0100	127
RC410	1SNA229157R0200	127
RC410	1SNA229158R1300	127
RC410	1SNA229159R1400	127
RC410	1SNA229160R1100	127
RC410	1SNA229161R0600	127
RC410	1SNA229162R0700	127
RC410	1SNA229163R0000	127
RC410	1SNA229164R0100	127
RC410	1SNA229165R0200	127
RC410	1SNA229166R0300	127
RC410	1SNA229167R0400	127
RC410	1SNA229168R1500	127
RC410	1SNA229169R1600	127
RC410	1SNA229170R1300	127
RC410	1SNA229171R0000	127
RC410	1SNA229172R0100	127
RC410	1SNA229173R0200	127
RC410	1SNA229174R0300	127
RC410	1SNA229175R0400	127
RC410	1SNA229180R0600	129
RC410	1SNA229181R2300	129
RC410	1SNA229182R2400	129
RC410	1SNA229183R2500	129
RC410	1SNA229184R2600	129
RC410	1SNA229185R2700	129
RC410	1SNA229186R2000	129
RC410	1SNA229187R2100	129
RC410	1SNA229188R0200	129
RC410	1SNA229189R0300	129
RC410	1SNA229190R0000	129
RC410	1SNA229191R2500	129
RC410	1SNA229192R2600	129
RC410	1SNA229193R2700	129
RC410	1SNA229194R2000	129
RC410	1SNA229195R2100	129
RC410	1SNA229196R2200	129
RC410	1SNA229197R2300	129
RC410	1SNA229198R0400	129
RC410	1SNA229199R0500	129
RC410	1SNA229200R2200	129
RC410	1SNA229201R1700	129
RC410	1SNA229202R1000	129
RC410	1SNA229203R1100	129
RC410	1SNA229204R1200	129
RC410	1SNA229205R1300	129
RC410	1SNA229210R1300	126
RC410	1SNA229211R0000	126
RC410	1SNA229212R0100	126
RC410	1SNA229213R0200	126
RC410	1SNA229214R0300	126
RC410	1SNA229215R0400	126
RC410	1SNA229216R0500	126
RC410	1SNA229217R0600	126
RC410	1SNA229218R1700	126
RC410	1SNA229220R1500	126
RC410	1SNA229221R0200	126
RC410	1SNA229222R0300	126
RC410	1SNA229223R0400	126
RC410	1SNA229224R0500	126
RC410	1SNA229225R0600	126
RC410	1SNA229226R0700	126
RC410	1SNA229227R0000	126
RC410	1SNA229228R1100	126
RC410	1SNA229229R1200	126
RC410	1SNA229230R1700	126
RC510	1SNA231000R0700	85
RC510	1SNA231001R2400	130
RC510	1SNA231002R2500	130
RC510	1SNA231003R2600	130
RC510	1SNA231004R2700	130
RC510	1SNA231005R2000	130
RC510	1SNA231006R2100	130
RC510	1SNA231007R2200	130
RC510	1SNA231008R0300	130
RC510	1SNA231009R0400	130
RC510	1SNA231010R2000	130
RC510	1SNA231011R1500	130
RC510	1SNA231012R1600	130
RC510	1SNA231013R1700	130
RC510	1SNA231014R1000	130
RC510	1SNA231015R1100	130
RC510	1SNA231016R1200	130
RC510	1SNA231017R1300	130
RC510	1SNA231018R2400	130
RC510	1SNA231019R2500	130
RC510	1SNA231020R2200	130
RC510	1SNA231021R1700	130
RC510	1SNA231030R2400	130
RC510	1SNA231031R1100	130
RC510	1SNA231032R1200	130
RC510	1SNA231033R1300	130
RC510	1SNA231034R1400	130
RC510	1SNA231035R1500	130
RC510	1SNA231036R1600	130
RC510	1SNA231037R1700	130
RC510	1SNA231038R2000	130
RC510	1SNA231039R2100	130
RC510	1SNA231040R0600	132
RC510	1SNA231041R2300	132
RC510	1SNA231042R2400	132
RC510	1SNA231043R2500	132
RC510	1SNA231044R2600	132
RC510	1SNA231045R2700	132
RC510	1SNA231046R2000	132
RC510	1SNA231047R2100	132
RC510	1SNA231048R0200	132
RC510	1SNA231049R0300	132
RC510	1SNA231050R0000	132
RC510	1SNA231051R2500	132
RC510	1SNA231052R2600	132
RC510	1SNA231053R2700	132
RC510	1SNA231054R2000	132
RC510	1SNA231055R2100	132
RC510	1SNA231056R2200	132
RC510	1SNA231057R2300	132
RC510	1SNA231058R0400	132
RC510	1SNA231059R0500	132
RC510	1SNA231060R0200	132
RC510	1SNA231061R2700	132
RC510	1SNA231062R2000	132
RC510	1SNA231063R2100	132
RC510	1SNA231064R2200	132
RC510	1SNA231065R2300	132
RC510	1SNA231066R2400	132
RC510	1SNA231067R2500	132
RC510	1SNA231068R0600	132
RC510	1SNA231069R0700	132
RC510	1SNA231072R2200	132
RC510	1SNA231111R1600	131
RC510	1SNA231112R1700	131
RC510	1SNA231113R1000	131
RC510	1SNA231114R1100	131
RC510	1SNA231115R1200	131
RC510	1SNA231116R1300	131
RC510	1SNA231117R1400	131
RC510	1SNA231118R2500	131
RC510	1SNA231119R2600	131
RC510	1SNA231131R1200	131
RC510	1SNA231133R1400	132
RC510	1SNA231134R1500	132
RC510	1SNA231135R1600	132
RC510	1SNA231136R1700	132
RC510	1SNA231137R1000	132
RC510	1SNA231150R0100	131
RC510	1SNA231151R2600	131
RC510	1SNA231152R2700	131
RC510	1SNA231153R2000	131
RC510	1SNA231154R2100	131
RC510	1SNA231155R2200	131
RC510	1SNA231156R2300	131
RC510	1SNA231157R2400	131
RC510	1SNA231158R0500	131
RC510	1SNA231159R0600	131
RC510	1SNA231160R0300	131
RC510	1SNA231161R2000	131
RC510	1SNA231162R2100	131
RC510	1SNA231163R2200	131
RC510	1SNA231164R2300	131
RC510	1SNA231165R2400	131
RC510	1SNA231166R2500	131
RC510	1SNA231167R2600	131
RC510	1SNA231168R0700	131
RC510	1SNA231169R0000	131
RC510	1SNA231170R0500	131
RC510	1SNA231171R2200	131
RC510	1SNA231172R2300	131
RC510	1SNA231173R2400	131
RC510	1SNA231174R2500	131
RC510	1SNA231175R2600	131
RC510	1SNA231180R2000	133
RC510	1SNA231181R1500	133
RC510	1SNA231182R1600	133
RC510	1SNA231183R1700	133
RC510	1SNA231184R1000	133
RC510	1SNA231185R1100	133
RC510	1SNA231186R1200	133
RC510	1SNA231187R1300	133
RC510	1SNA231188R2400	133
RC510	1SNA231189R2500	133

Index
Type classification

Type	Part Number	Page
RC510	1SNA231190R2200	133
RC510	1SNA231191R1700	133
RC510	1SNA231192R1000	133
RC510	1SNA231193R1100	133
RC510	1SNA231194R1200	133
RC510	1SNA231195R1300	133
RC510	1SNA231196R1400	133
RC510	1SNA231197R1500	133
RC510	1SNA231198R2600	133
RC510	1SNA231199R2700	133
RC510	1SNA231200R1400	133
RC510	1SNA231201R0100	133
RC510	1SNA231202R0200	133
RC510	1SNA231203R0300	133
RC510	1SNA231204R0400	133
RC510	1SNA231205R0500	133
RC510	1SNA231210R0500	130
RC510	1SNA231211R2200	130
RC510	1SNA231212R2300	130
RC510	1SNA231213R2400	130
RC510	1SNA231214R2500	130
RC510	1SNA231215R2600	130
RC510	1SNA231216R2700	130
RC510	1SNA231217R2000	130
RC510	1SNA231218R0100	130
RC510	1SNA231220R0700	130
RC510	1SNA231221R2400	130
RC510	1SNA231222R2500	130
RC510	1SNA231223R2600	130
RC510	1SNA231224R2700	130
RC510	1SNA231225R2000	130
RC510	1SNA231226R2100	130
RC510	1SNA231227R2200	130
RC510	1SNA231228R0300	130
RC510	1SNA231229R0400	130
RC510	1SNA231230R0100	130
RC510TT	1SNA231600R1500	17
RC510TT-YL	1SNA231700R1100	17
RC510-YL	1SNA103890R2100	85
RC55	1SNA230000R1200	86
RC55	1SNA230001R0700	144
RC55	1SNA230002R0000	144
RC55	1SNA230003R0100	144
RC55	1SNA230004R0200	144
RC55	1SNA230005R0300	144
RC55	1SNA230006R0400	144
RC55	1SNA230007R0500	144
RC55	1SNA230008R1600	144
RC55	1SNA230009R1700	144
RC55	1SNA230010R0300	144
RC55	1SNA230011R2000	144
RC55	1SNA230012R2100	144
RC55	1SNA230013R2200	144
RC55	1SNA230014R2300	144
RC55	1SNA230015R2400	144
RC55	1SNA230016R2500	144
RC55	1SNA230017R2600	144
RC55	1SNA230018R0700	144
RC55	1SNA230019R0000	144
RC55	1SNA230020R0500	144
RC55	1SNA230021R2200	144
RC55	1SNA230030R0700	144
RC55	1SNA230031R2400	144
RC55	1SNA230032R2500	144
RC55	1SNA230033R2600	144
RC55	1SNA230034R2700	144
RC55	1SNA230035R2000	144
RC55	1SNA230036R2100	144
RC55	1SNA230037R2200	144
RC55	1SNA230038R0300	144
RC55	1SNA230039R0400	144
RC55	1SNA230040R1100	146
RC55	1SNA230041R0600	146
RC55	1SNA230042R0700	146
RC55	1SNA230043R0000	146
RC55	1SNA230044R0100	146
RC55	1SNA230045R0200	146
RC55	1SNA230046R0300	146
RC55	1SNA230047R0400	146
RC55	1SNA230048R1500	146
RC55	1SNA230049R1600	146
RC55	1SNA230050R1300	146
RC55	1SNA230051R0000	146
RC55	1SNA230052R0100	146
RC55	1SNA230053R0200	146
RC55	1SNA230054R0300	146
RC55	1SNA230055R0400	146
RC55	1SNA230056R0500	146
RC55	1SNA230057R0600	146
RC55	1SNA230058R1700	146
RC55	1SNA230059R1000	146
RC55	1SNA230060R1500	146
RC55	1SNA230061R0200	146
RC55	1SNA230062R0300	146
RC55	1SNA230063R0400	146
RC55	1SNA230064R0500	146
RC55	1SNA230065R0600	146
RC55	1SNA230066R0700	146
RC55	1SNA230067R0000	146
RC55	1SNA230068R1100	146
RC55	1SNA230069R1200	146
RC55	1SNA230072R0500	146
RC55	1SNA230111R2100	145
RC55	1SNA230112R2200	145
RC55	1SNA230113R2300	145
RC55	1SNA230114R2400	145
RC55	1SNA230115R2500	145
RC55	1SNA230116R2600	145
RC55	1SNA230117R2700	145
RC55	1SNA230118R0000	145
RC55	1SNA230119R0100	145
RC55	1SNA230131R2500	145
RC55	1SNA230150R1400	145
RC55	1SNA230151R0100	145
RC55	1SNA230152R0200	145
RC55	1SNA230153R0300	145
RC55	1SNA230154R0400	145
RC55	1SNA230155R0500	145
RC55	1SNA230156R0600	145
RC55	1SNA230157R0700	145
RC55	1SNA230158R1000	145
RC55	1SNA230159R1100	145
RC55	1SNA230160R1600	145
RC55	1SNA230161R0300	145
RC55	1SNA230162R0400	145
RC55	1SNA230163R0500	145
RC55	1SNA230164R0600	145
RC55	1SNA230165R0700	145
RC55	1SNA230166R0000	145
RC55	1SNA230167R0100	145
RC55	1SNA230168R1200	145
RC55	1SNA230169R1300	145
RC55	1SNA230170R1000	145
RC55	1SNA230171R0500	145
RC55	1SNA230172R0600	145
RC55	1SNA230173R0700	145
RC55	1SNA230174R0000	145
RC55	1SNA230175R0100	145
RC55	1SNA230180R0300	146
RC55	1SNA230181R2000	146
RC55	1SNA230182R2100	146
RC55	1SNA230183R2200	146
RC55	1SNA230184R2300	146
RC55	1SNA230185R2400	146
RC55	1SNA230186R2500	146
RC55	1SNA230187R2600	146
RC55	1SNA230188R0700	146
RC55	1SNA230189R0000	146
RC55	1SNA230190R0500	146
RC55	1SNA230191R2200	146
RC55	1SNA230192R2300	146
RC55	1SNA230193R2400	146
RC55	1SNA230194R2500	146
RC55	1SNA230195R2600	146
RC55	1SNA230196R2700	146
RC55	1SNA230197R2000	146
RC55	1SNA230198R0100	146
RC55	1SNA230199R0200	146
RC55	1SNA230200R2700	146
RC55	1SNA230201R1400	146
RC55	1SNA230202R1500	146
RC55	1SNA230203R1600	146
RC55	1SNA230204R1700	146
RC55	1SNA230205R1000	146
RC55	1SNA230240R2600	144
RC55	1SNA230241R1300	144
RC55	1SNA230242R1400	144
RC55	1SNA230243R1500	144
RC55	1SNA230244R1600	144
RC55	1SNA230245R1700	144
RC55	1SNA230246R1000	144
RC55	1SNA230247R1100	144
RC55	1SNA230248R2200	144
RC55	1SNA230250R2000	144
RC55	1SNA230251R1500	144
RC55	1SNA230252R1600	144
RC55	1SNA230253R1700	144
RC55	1SNA230254R1000	144
RC55	1SNA230255R1100	144
RC55	1SNA230256R1200	144
RC55	1SNA230257R1300	144
RC55	1SNA230258R2400	144
RC55	1SNA230259R2500	144
RC55	1SNA230260R2200	144
RC610	1SNA206230R1100	85
RC610	1SNA206231R0600	85
RC610	1SNA206232R0700	85
RC610	1SNA206233R0000	85
RC610	1SNA206234R0100	85
RC610	1SNA206235R0200	85
RC610	1SNA233000R0100	85
RC610	1SNA233001R2600	134
RC610	1SNA233002R2700	134
RC610	1SNA233003R2000	134
RC610	1SNA233004R2100	134
RC610	1SNA233005R2200	134
RC610	1SNA233006R2300	134
RC610	1SNA233007R2400	134
RC610	1SNA233008R0500	134
RC610	1SNA233009R0600	134
RC610	1SNA233010R2200	134
RC610	1SNA233011R1700	134
RC610	1SNA233012R1000	134
RC610	1SNA233013R1100	134
RC610	1SNA233014R1200	134
RC610	1SNA233015R1300	134
RC610	1SNA233016R1400	134
RC610	1SNA233017R1500	134
RC610	1SNA233018R2600	134
RC610	1SNA233019R2700	134
RC610	1SNA233020R2400	134
RC610	1SNA233021R1100	134
RC610	1SNA233022R1200	134
RC610	1SNA233023R1300	134
RC610	1SNA233024R1400	134
RC610	1SNA233025R1500	134
RC610	1SNA233026R1600	134
RC610	1SNA233027R1700	134
RC610	1SNA233028R2000	134
RC610	1SNA233029R2100	134
RC610	1SNA233030R2600	135
RC610	1SNA233031R1300	135
RC610	1SNA233032R1400	135
RC610	1SNA233033R1500	135
RC610	1SNA233034R1600	135
RC610	1SNA233035R1700	135
RC610	1SNA233036R1000	135
RC610	1SNA233040R0000	137
RC610	1SNA233041R2500	137
RC610	1SNA233042R2600	137
RC610	1SNA233043R2700	137
RC610	1SNA233044R2000	137
RC610	1SNA233045R2100	137
RC610	1SNA233046R2200	137
RC610	1SNA233047R2300	137
RC610	1SNA233048R0400	137
RC610	1SNA233049R0500	137
RC610	1SNA233050R0200	137
RC610	1SNA233051R2700	137
RC610	1SNA233060R0400	137
RC610	1SNA233061R2100	137
RC610	1SNA233062R2200	137
RC610	1SNA233063R2300	137
RC610	1SNA233064R2400	137
RC610	1SNA233065R2500	137
RC610	1SNA233066R2600	137
RC610	1SNA233067R2700	137
RC610	1SNA233068R0000	137
RC610	1SNA233069R0100	137
RC610	1SNA233074R2600	135
RC610	1SNA233075R2700	135
RC610	1SNA233076R2000	135
RC610	1SNA233080R2100	137
RC610	1SNA233081R1600	137
RC610	1SNA233082R1700	137
RC610	1SNA233083R1000	137
RC610	1SNA233084R1100	137
RC610	1SNA233085R1200	137
RC610	1SNA233086R1300	137
RC610	1SNA233087R1400	137
RC610	1SNA233088R2500	137
RC610	1SNA233090R2300	134
RC610	1SNA233091R1000	134
RC610	1SNA233092R1100	134
RC610	1SNA233093R1200	134
RC610	1SNA233094R1300	134
RC610	1SNA233095R1400	134
RC610	1SNA233096R1500	134
RC610	1SNA233097R1600	134
RC610	1SNA233098R2700	134
RC610	1SNA233099R2000	134
RC610	1SNA233100R0200	134
RC610	1SNA233101R2700	134
RC610	1SNA233102R2000	134
RC610	1SNA233103R2100	134
RC610	1SNA233104R2200	134
RC610	1SNA233105R2300	134
RC610	1SNA233106R2400	134
RC610	1SNA233107R2500	134
RC610	1SNA233108R0600	134
RC610	1SNA233109R0700	134
RC610	1SNA233110R2300	134
RC610	1SNA233111R1000	136
RC610	1SNA233112R1100	136
RC610	1SNA233113R1200	136

Index
Type classification

Type	Part Number	Page
RC610	1SNA233114R1300	136
RC610	1SNA233115R1400	136
RC610	1SNA233116R1500	136
RC610	1SNA233117R1600	136
RC610	1SNA233118R2700	136
RC610	1SNA233119R2000	136
RC610	1SNA233120R2500	134
RC610	1SNA233124R1500	138
RC610	1SNA233125R1600	138
RC610	1SNA233126R1700	138
RC610	1SNA233127R1000	138
RC610	1SNA233131R1400	136
RC610	1SNA233132R1500	136
RC610	1SNA233133R1600	135
RC610	1SNA233134R1700	135
RC610	1SNA233135R1000	135
RC610	1SNA233136R1100	135
RC610	1SNA233137R1200	135
RC610	1SNA233141R2600	135
RC610	1SNA233142R2700	135
RC610	1SNA233143R2000	138
RC610	1SNA233144R2100	138
RC610	1SNA233145R2200	138
RC610	1SNA233146R2300	138
RC610	1SNA233147R2400	138
RC610	1SNA233150R0300	136
RC610	1SNA233151R2000	136
RC610	1SNA233152R2100	136
RC610	1SNA233153R2200	136
RC610	1SNA233154R2300	136
RC610	1SNA233155R2400	136
RC610	1SNA233156R2500	136
RC610	1SNA233157R2600	136
RC610	1SNA233158R0700	136
RC610	1SNA233159R0000	136
RC610	1SNA233160R0500	136
RC610	1SNA233161R2200	136
RC610	1SNA233162R2300	136
RC610	1SNA233163R2400	136
RC610	1SNA233164R2500	136
RC610	1SNA233165R2600	136
RC610	1SNA233166R2700	136
RC610	1SNA233167R2000	136
RC610	1SNA233168R0100	136
RC610	1SNA233169R0200	136
RC610	1SNA233170R0700	136
RC610	1SNA233171R2400	136
RC610	1SNA233172R2500	136
RC610	1SNA233173R2600	136
RC610	1SNA233174R2700	136
RC610	1SNA233175R2000	136
RC610	1SNA233180R2200	138
RC610	1SNA233181R1700	138
RC610	1SNA233182R1000	138
RC610	1SNA233183R1100	138
RC610	1SNA233184R1200	138
RC610	1SNA233185R1300	138
RC610	1SNA233186R1400	138
RC610	1SNA233187R1500	138
RC610	1SNA233188R2600	138
RC610	1SNA233189R2700	138
RC610	1SNA233190R2400	138
RC610	1SNA233191R1100	138
RC610	1SNA233192R1200	138
RC610	1SNA233193R1300	138
RC610	1SNA233194R1400	138
RC610	1SNA233195R1500	138
RC610	1SNA233196R1600	138
RC610	1SNA233197R1700	138
RC610	1SNA233198R2000	138
RC610	1SNA233199R2100	138
RC610	1SNA233200R1600	138
RC610	1SNA233201R0300	135
RC610	1SNA233202R0400	135
RC610	1SNA233203R0500	135
RC610	1SNA233204R0600	135
RC610	1SNA233205R0700	135
RC610	1SNA233206R0000	135
RC610	1SNA233207R0100	135
RC610	1SNA233208R1200	135
RC610	1SNA233209R1300	135
RC610	1SNA233211R2400	135
RC610	1SNA233212R2500	135
RC610	1SNA233213R2600	135
RC610	1SNA233214R2700	135
RC610	1SNA233215R2000	135
RC610	1SNA233216R2100	135
RC610	1SNA233217R2200	135
RC610	1SNA233218R0300	135
RC610	1SNA233219R0400	135
RC610	1SNA233220R0100	135
RC610	1SNA233221R2600	135
RC610	1SNA233235R2400	138
RC610	1SNA233236R2500	138
RC610	1SNA233237R2600	138
RC610	1SNA233238R0700	138
RC610	1SNA233239R0000	138
RC610	1SNA233240R1500	137
RC610	1SNA233241R0200	137
RC610	1SNA233242R0300	137
RC610	1SNA233243R0400	137
RC610	1SNA233244R0500	137
RC610	1SNA233245R0600	137
RC610	1SNA233246R0700	137
RC610	1SNA233247R0000	137
RC610	1SNA233248R1100	137
RC610	1SNA233250R1700	137
RC610	1SNA233251R0400	137
RC610	1SNA233252R0500	137
RC610	1SNA233253R0600	137
RC610	1SNA233254R0700	137
RC610	1SNA233255R0000	137
RC610	1SNA233256R0100	137
RC610	1SNA233257R0200	137
RC610	1SNA233258R1300	137
RC610	1SNA233259R1400	137
RC610	1SNA233260R1100	137
RC610TT	1SNA233600R1700	17
RC610TT-YL	1SNA233700R1300	17
RC65	1SNA103775R0000	86
RC65	1SNA103776R0100	86
RC65	1SNA232000R0000	86
RC65	1SNA232001R2500	147
RC65	1SNA232002R2600	147
RC65	1SNA232003R2700	147
RC65	1SNA232004R2000	147
RC65	1SNA232005R2100	147
RC65	1SNA232006R2200	147
RC65	1SNA232007R2300	147
RC65	1SNA232008R0400	147
RC65	1SNA232009R0500	147
RC65	1SNA232010R2100	147
RC65	1SNA232011R1600	147
RC65	1SNA232012R1700	147
RC65	1SNA232013R1000	147
RC65	1SNA232014R1100	147
RC65	1SNA232015R1200	147
RC65	1SNA232016R1300	147
RC65	1SNA232017R1400	147
RC65	1SNA232018R2500	147
RC65	1SNA232019R2600	147
RC65	1SNA232020R2300	147
RC65	1SNA232021R1000	147
RC65	1SNA232030R2500	147
RC65	1SNA232031R1200	147
RC65	1SNA232032R1300	147
RC65	1SNA232033R1400	147
RC65	1SNA232034R1500	147
RC65	1SNA232035R1600	147
RC65	1SNA232036R1700	147
RC65	1SNA232037R1000	147
RC65	1SNA232038R2100	147
RC65	1SNA232039R2200	147
RC65	1SNA232040R0700	149
RC65	1SNA232041R2400	149
RC65	1SNA232042R2500	149
RC65	1SNA232043R2600	149
RC65	1SNA232044R2700	149
RC65	1SNA232045R2000	149
RC65	1SNA232046R2100	149
RC65	1SNA232047R2200	149
RC65	1SNA232048R0300	149
RC65	1SNA232049R0400	149
RC65	1SNA232050R0100	149
RC65	1SNA232051R2600	149
RC65	1SNA232052R2700	149
RC65	1SNA232053R2000	149
RC65	1SNA232054R2100	149
RC65	1SNA232055R2200	149
RC65	1SNA232056R2300	149
RC65	1SNA232057R2400	149
RC65	1SNA232058R0500	149
RC65	1SNA232059R0600	149
RC65	1SNA232060R0300	149
RC65	1SNA232061R2000	149
RC65	1SNA232062R2100	149
RC65	1SNA232063R2200	149
RC65	1SNA232064R2300	149
RC65	1SNA232065R2400	149
RC65	1SNA232066R2500	149
RC65	1SNA232067R2600	149
RC65	1SNA232068R0700	149
RC65	1SNA232069R0000	149
RC65	1SNA232072R2300	149
RC65	1SNA232111R1700	148
RC65	1SNA232112R1000	148
RC65	1SNA232113R1100	148
RC65	1SNA232114R1200	148
RC65	1SNA232115R1300	148
RC65	1SNA232116R1400	148
RC65	1SNA232117R1500	148
RC65	1SNA232118R2600	148
RC65	1SNA232119R2700	148
RC65	1SNA232131R1300	148
RC65	1SNA232132R1400	148
RC65	1SNA232133R1500	148
RC65	1SNA232134R1600	148
RC65	1SNA232135R1700	148
RC65	1SNA232136R1000	148
RC65	1SNA232137R1100	148
RC65	1SNA232150R0200	148
RC65	1SNA232151R2700	148
RC65	1SNA232152R2000	148
RC65	1SNA232153R2100	148
RC65	1SNA232154R2200	148
RC65	1SNA232155R2300	148
RC65	1SNA232156R2400	148
RC65	1SNA232157R2500	148
RC65	1SNA232158R0600	148
RC65	1SNA232159R0700	148
RC65	1SNA232160R0400	148
RC65	1SNA232161R2100	148
RC65	1SNA232162R2200	148
RC65	1SNA232163R2300	148
RC65	1SNA232164R2400	148
RC65	1SNA232165R2500	148
RC65	1SNA232166R2600	148
RC65	1SNA232167R2700	148
RC65	1SNA232168R0000	148
RC65	1SNA232169R0100	148
RC65	1SNA232170R0600	148
RC65	1SNA232171R2300	148
RC65	1SNA232172R2400	148
RC65	1SNA232173R2500	148
RC65	1SNA232174R2600	148
RC65	1SNA232175R2700	148
RC65	1SNA232180R2100	150
RC65	1SNA232181R1600	150
RC65	1SNA232182R1700	150
RC65	1SNA232183R1000	150
RC65	1SNA232184R1100	150
RC65	1SNA232185R1200	150
RC65	1SNA232186R1300	150
RC65	1SNA232187R1400	150
RC65	1SNA232188R2500	150
RC65	1SNA232189R2600	150
RC65	1SNA232190R2300	150
RC65	1SNA232191R1000	150
RC65	1SNA232192R1100	150
RC65	1SNA232193R1200	150
RC65	1SNA232194R1300	150
RC65	1SNA232195R1400	150
RC65	1SNA232196R1500	150
RC65	1SNA232197R1600	150
RC65	1SNA232198R2700	150
RC65	1SNA232199R2000	150
RC65	1SNA232200R1500	150
RC65	1SNA232201R0200	147
RC65	1SNA232202R0300	147
RC65	1SNA232203R0400	147
RC65	1SNA232204R0500	147
RC65	1SNA232205R0600	147
RC65	1SNA232206R0700	147
RC65	1SNA232207R0000	147
RC65	1SNA232208R1100	147
RC65	1SNA232209R1200	147
RC65	1SNA232211R2300	147
RC65	1SNA232212R2400	147
RC65	1SNA232213R2500	147
RC65	1SNA232214R2600	147
RC65	1SNA232215R2700	147
RC65	1SNA232216R2000	147
RC65	1SNA232217R2100	147
RC65	1SNA232218R0200	147
RC65	1SNA232219R0300	147
RC65	1SNA232220R0000	147
RC65	1SNA232221R2500	147
RC65	1SNA232235R2300	150
RC65	1SNA232236R2400	150
RC65	1SNA232237R2500	150
RC65	1SNA232238R0600	150
RC65	1SNA232239R0700	150
RC65	1SNA232240R1400	149
RC65	1SNA232241R0100	149
RC65	1SNA232242R0200	149
RC65	1SNA232243R0300	149
RC65	1SNA232244R0400	149
RC65	1SNA232245R0500	149
RC65	1SNA232246R0600	149
RC65	1SNA232247R0700	149
RC65	1SNA232248R1000	149
RC65	1SNA232250R1600	149
RC65	1SNA232251R0300	149
RC65	1SNA232252R0400	149
RC65	1SNA232253R0500	149

Index
Type classification

Type	Part Number	Page
RC65	1SNA232254R0600	149
RC65	1SNA232255R0700	149
RC65	1SNA232256R0000	149
RC65	1SNA232257R0100	149
RC65	1SNA232258R1200	149
RC65	1SNA232259R1300	149
RC65	1SNA232260R1000	149
RC810	1SNA234000R0200	85
RC810	1SNA234001R2700	139
RC810	1SNA234002R2000	139
RC810	1SNA234003R2100	139
RC810	1SNA234004R2200	139
RC810	1SNA234005R2300	139
RC810	1SNA234006R2400	139
RC810	1SNA234007R2500	139
RC810	1SNA234008R0600	139
RC810	1SNA234009R0700	139
RC810	1SNA234010R2300	139
RC810	1SNA234011R1000	139
RC810	1SNA234012R1100	139
RC810	1SNA234013R1200	139
RC810	1SNA234014R1300	139
RC810	1SNA234015R1400	139
RC810	1SNA234016R1500	139
RC810	1SNA234017R1600	139
RC810	1SNA234018R2700	139
RC810	1SNA234019R2000	139
RC810	1SNA234020R2500	139
RC810	1SNA234021R1200	139
RC810	1SNA234030R2700	139
RC810	1SNA234031R1400	139
RC810	1SNA234032R1500	139
RC810	1SNA234033R1600	139
RC810	1SNA234034R1700	139
RC810	1SNA234035R1000	139
RC810	1SNA234036R1100	139
RC810	1SNA234037R1200	139
RC810	1SNA234038R2300	139
RC810	1SNA234039R2400	139
RC810	1SNA234040R0100	141
RC810	1SNA234041R2600	141
RC810	1SNA234042R2700	141
RC810	1SNA234043R2000	141
RC810	1SNA234044R2100	141
RC810	1SNA234045R2200	141
RC810	1SNA234046R2300	141
RC810	1SNA234047R2400	141
RC810	1SNA234048R0500	141
RC810	1SNA234049R0600	141
RC810	1SNA234050R0300	141
RC810	1SNA234051R2000	141
RC810	1SNA234052R2100	141
RC810	1SNA234053R2200	141
RC810	1SNA234054R2300	141
RC810	1SNA234055R2400	141
RC810	1SNA234056R2500	141
RC810	1SNA234057R2600	141
RC810	1SNA234058R0700	141
RC810	1SNA234059R0000	141
RC810	1SNA234060R0500	141
RC810	1SNA234061R2200	141
RC810	1SNA234062R2300	141
RC810	1SNA234063R2400	141
RC810	1SNA234064R2500	141
RC810	1SNA234065R2600	141
RC810	1SNA234066R2700	141
RC810	1SNA234067R2000	141
RC810	1SNA234068R0100	141
RC810	1SNA234069R0200	141
RC810	1SNA234072R2500	141
RC810	1SNA234111R1100	140
RC810	1SNA234112R1200	140
RC810	1SNA234113R1300	140
RC810	1SNA234114R1400	140
RC810	1SNA234115R1500	140
RC810	1SNA234116R1600	140
RC810	1SNA234130R2000	139
RC810	1SNA234150R0400	140
RC810	1SNA234151R2100	140
RC810	1SNA234152R2200	140
RC810	1SNA234153R2300	140
RC810	1SNA234154R2400	140
RC810	1SNA234155R2500	140
RC810	1SNA234156R2600	140
RC810	1SNA234157R2700	140
RC810	1SNA234158R0000	140
RC810	1SNA234159R0100	140
RC810	1SNA234160R0600	140
RC810	1SNA234161R2300	140
RC810	1SNA234162R2400	140
RC810	1SNA234163R2500	140
RC810	1SNA234164R2600	140
RC810	1SNA234165R2700	140
RC810	1SNA234166R2000	140
RC810	1SNA234167R2100	140
RC810	1SNA234168R0200	140
RC810	1SNA234169R0300	140
RC810	1SNA234170R0000	140
RC810	1SNA234171R2500	140
RC810	1SNA234172R2600	140
RC810	1SNA234173R2700	140
RC810	1SNA234174R2000	140
RC810	1SNA234175R2100	140
RC810	1SNA234180R2300	141
RC810	1SNA234181R1000	141
RC810	1SNA234182R1100	141
RC810	1SNA234183R1200	141
RC810	1SNA234184R1300	141
RC810	1SNA234185R1400	141
RC810	1SNA234186R1500	141
RC810	1SNA234187R1600	141
RC810	1SNA234188R2700	141
RC810	1SNA234189R2000	141
RC810	1SNA234190R2500	141
RC810	1SNA234191R1200	141
RC810	1SNA234192R1300	141
RC810	1SNA234193R1400	141
RC810	1SNA234194R1500	141
RC810	1SNA234195R1600	141
RC810	1SNA234196R1700	141
RC810	1SNA234197R1000	141
RC810	1SNA234198R2100	141
RC810	1SNA234199R2200	141
RC810	1SNA234200R1700	141
RC810	1SNA234201R0400	141
RC810	1SNA234202R0500	141
RC810	1SNA234203R0600	141
RC810	1SNA234204R0700	141
RC810	1SNA234205R0000	141
RC810TT	1SNA234600R1000	17
RC810TT-YL	1SNA234700R1400	17
RCAL85	1SNA237000R0500	86
RCAL85	1SNA237001R2200	151
RCAL85	1SNA237002R2300	151
RCAL85	1SNA237003R2400	151
RCAL85	1SNA237004R2500	151
RCAL85	1SNA237005R2600	151
RCAL85	1SNA237006R2700	151
RCAL85	1SNA237007R2000	151
RCAL85	1SNA237008R0100	151
RCAL85	1SNA237009R0200	151
RCAL85	1SNA237010R2600	151
RCAL85	1SNA237011R1300	151
RCAL85	1SNA237012R1400	151
RCAL85	1SNA237013R1500	151
RCAL85	1SNA237014R1600	151
RCAL85	1SNA237015R1700	151
RCAL85	1SNA237016R1000	151
RCAL85	1SNA237017R1100	151
RCAL85	1SNA237018R2200	151
RCAL85	1SNA237019R2300	151
RCAL85	1SNA237020R2000	151
RCAL85	1SNA237021R1500	151
RCAL85	1SNA237030R2200	151
RCAL85	1SNA237031R1700	151
RCAL85	1SNA237032R1000	151
RCAL85	1SNA237033R1100	151
RCAL85	1SNA237034R1200	151
RCAL85	1SNA237035R1300	151
RCAL85	1SNA237036R1400	151
RCAL85	1SNA237040R0400	152
RCAL85	1SNA237041R2100	152
RCAL85	1SNA237042R2200	152
RCAL85	1SNA237043R2300	152
RCAL85	1SNA237044R2400	152
RCAL85	1SNA237045R2500	152
RCAL85	1SNA237046R2600	152
RCAL85	1SNA237047R2700	152
RCAL85	1SNA237048R0000	152
RCAL85	1SNA237049R0100	152
RCAL85	1SNA237050R0600	152
RCAL85	1SNA237051R2300	152
RCAL85	1SNA237060R0000	152
RCAL85	1SNA237061R2500	152
RCAL85	1SNA237062R2600	152
RCAL85	1SNA237063R2700	152
RCAL85	1SNA237064R2000	152
RCAL85	1SNA237065R2100	152
RCAL85	1SNA237066R2200	152
RCAL85	1SNA237067R2300	152
RCAL85	1SNA237068R0400	152
RCAL85	1SNA237074R2200	151
RCAL85	1SNA237075R2300	151
RCAL85	1SNA237076R2400	151
RCAL85	1SNA237080R2500	152
RCAL85	1SNA237081R1200	152
RCAL85	1SNA237082R1300	152
RCAL85	1SNA237083R1400	152
RCAL85	1SNA237084R1500	152
RCAL85	1SNA237085R1600	152
RCAL85	1SNA237086R1700	152
RCAL85	1SNA237087R1000	152
RCAL85	1SNA237088R2100	152
RCAL85	1SNA237131R1000	151
RCAL85	1SNA237132R1100	151
RCCV	1SNA235460R0400	103
RCL510	1SNA235097R1000	18
RCP510	1SNA235095R1600	18
RCPEAD	1SNA399725R0600	94
RCPEAD-TT	1SNA235158R0100	22
RCPEAD-TT-YL	1SNA235159R0200	22
RCPEB	1SNA178430R0500	96
RCT610	1SNA236000R0400	87
RCT610	1SNA236001R2100	153
RCT810	1SNA236500R0600	87
RCT810	1SNA236501R2300	153
RCW510	1SNA235096R1700	18
REH3	1SNA163155R2600	91
REH3	1SNA163167R2200	155
REH3	1SNA164695R2500	155
RIB-B	1SNA235710R0600	12
RIB-R	1SNA235711R2300	12
RIB-RS	1SNA235718R0200	12
RING1210	1SNA235120R2700	27
RING122	1SNA235117R1000	27
RING124	1SNA235118R2100	27
RING127	1SNA235119R2200	27
RING1810	1SNA235126R1100	27
RING182	1SNA235123R1600	27
RING184	1SNA235124R1700	27
RING187	1SNA235125R1000	27
RINGT209	1SNA235142R2100	28
RINGT23	1SNA235137R1400	27
RPA	1SNA235463R2300	104
RPA-TT	1SNA235151R2200	30
RPA-TT-YL	1SNA235152R2300	30
RPEH	1SNA163007R2600	95
RPEV	1SNA173178R0700	89
RTA-TAP 990453N	1SNB990453R0000	69
RTA-TAP 990455N	1SNB990455R0000	69
RTA-TAPW 990653N	1SNB990653R0000	70
RT-CCP 990456	1SNB990456R0000	69
RTM7	1SNA103115R1300	154
RTM7	1SNA103116R1400	154
RTM7	1SNA103922R1400	154
RTM7	1SNA168410R0700	90
RTM9	1SNA164602R0000	90
RTR-TAP 990452	1SNB990452R0000	69
RTR-TAP 990454	1SNB990454R0000	69
SERVICE KIT FOR AMS 500	1SNA360162R1600	81
SNAP1510	1SNA235132R1700	27
SNAP152	1SNA235129R2400	27
SNAP154	1SNA235130R2100	27
SNAP157	1SNA235131R1600	27
SNAP2310	1SNA235136R1300	27
SNAP232	1SNA235133R1000	27
SNAP234	1SNA235134R1100	27
SNAP237	1SNA235135R1200	27
SPDST1	1SNA360163R1700	81
SPRC 1	1SNA360010R1500	81
SPRC 10	1SNA360020R1700	81
SPRC 11	1SNA360021R0400	81
SPRC 13	1SNA360023R0600	81
SPRC 14	1SNA360024R0700	81
SPRC 15	1SNA360025R0000	81
SPRC 16	1SNA360026R0100	81
SPRC 2	1SNA360011R1500	81
SPRC 21	1SNA360031R0600	81
SPRC 26	1SNA360036R0300	81
SPRC 27	1SNA360037R0400	81
SPRC 28	1SNA360040R2300	81
SPRC 29	1SNA360038R1500	81
SPRC 30-3	1SNA360039R1700	81
SPRC 4	1SNA360014R0500	81
SPRC 5	1SNA360015R0600	81
SPRC 6	1SNA360016R0700	81
SPRC 7	1SNA360017R0000	81
SPRC 8	1SNA360018R1100	81
SPRC 9	1SNA360019R1200	81
SPRCC 2	1SNA360011R0200	103
UMH	1SNK900611R0000	58
VSP12	1SNA163432R1400	157
VSP16	1SNA173147R2000	157
VSP22	1SNA400252R1200	157
VSP6	1SNA163433R1500	157
VSP68	1SNA206103R0700	157
WM12	1SNA235148R0700	100
WM18	1SNA235149R0000	100
WMTT12	1SNA235093R1400	26
WMTT18	1SNA235094R1500	26

EASY RAIL DESIGNER 3D

TERMINAL BLOCK ASSEMBLY SOFTWARE

ENTRELEC Terminal Blocks

EASY RAIL DESIGNER 3D

From engineering to assembling

ENGINEERING,
DO IT YOURSELF EASILY

Speed up your projects

Simplify the design process

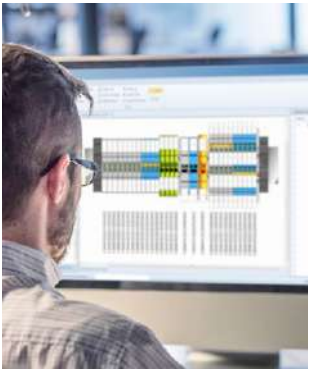

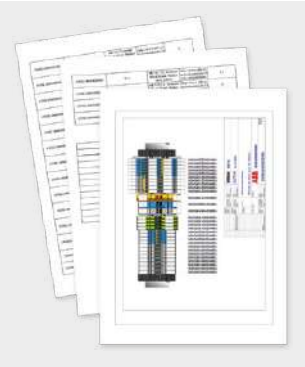

Advanced 3D drawing and data export

- Built-in 3D viewer
- Integration to CAD/ CAE softwares
- Compatibility with TE printers
- Detailed drawings of the rail, assembly and markers.

Customized project management

- Management of multiple projects
- Indication on the drawing of the supplier's, integrator's and end user's data
- Drawing update indexing with PDF report.

User-friendly configurator

- Intuitive Windows® (1) user interface
- Autocorrecting system
- Powerful search engine
- Insertion of products external to the database.

(1) Windows® is a registered trademark of Microsoft.

ASSEMBLING,
RELY ON TE EXPERTISE

Cost effective solution

Up to 20% of material cost reduction

TE technical expertise

- Drawing technical verification done by TE experts
- 100% reliable data import to TE production system.

Flexible production

- 3 types of assembly:
  - rail mounted
  - pre-assembled
  - packed in kit.
- Possibility to add some other TE Din rail products.

Optimized inventory

- Products and markers stocked by TE
- Marking managed by TE
- One single product part number corresponds to one complete assembly.

EASY RAIL DESIGNER 3D

User-oriented features

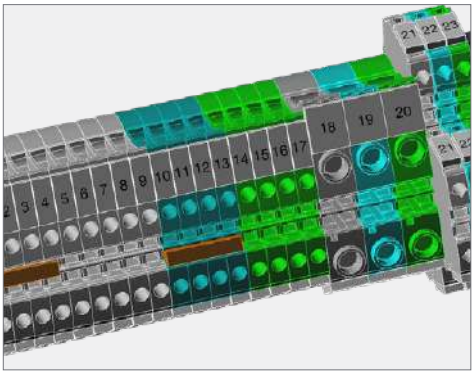

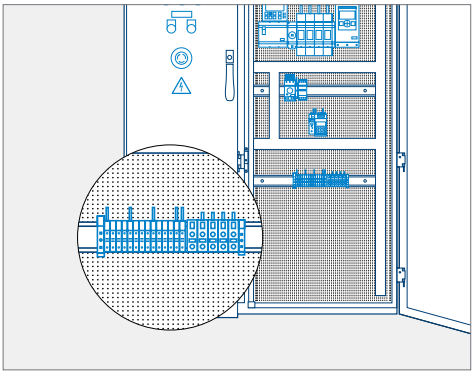

3D drawing

- Built-in 3D viewer
- 3D drawing export.

CAD/CAE integration

- Export to the main CAD/CAE softwares.

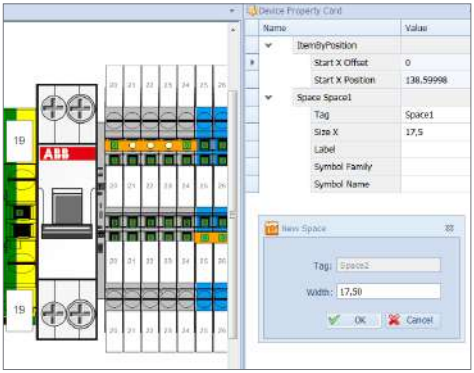

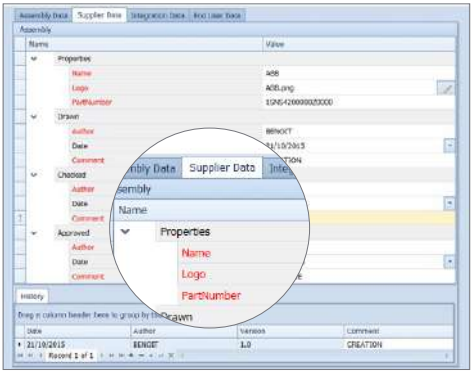

Complementary products

- Insertion of products and components (diode, resistor) external to the database.

Customization

- Indication on the drawing of the supplier's, integrator's and end user's name, logotype and part number.

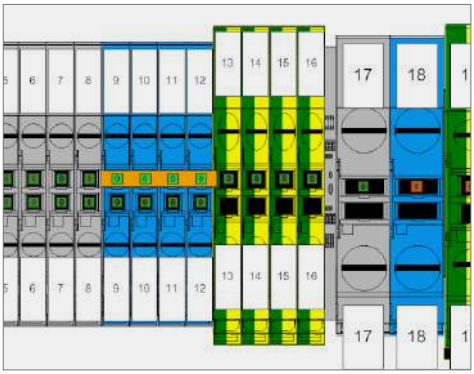

Marking

- Compatibility with TE printers.

Technical file

- Exportation of the technical file with the drawings of the rail, assembly and markers and their bills of material.

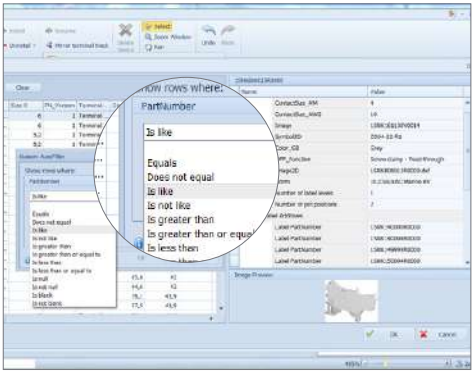

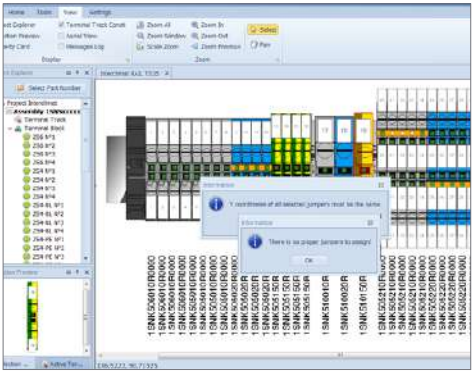

Search

- Powerful search engine allowing to filter per range, function, standard and technical attributes.

Autocorrection

- Intuitive Windows® (1) user interface and autocorrecting system.

(1) Windows® is a registered trademark of Microsoft.

LET'S CONNECT

We make it easy to connect with our experts and are ready to provide all the support you need. For additional information or product assistance, please contact your field representative or our customer service department. Additional information is also available on the website http://www.te.com/entrelec.

TECHNICAL SUPPORT

te.com/support-center

Asia:
+86 400-820-6015

Europe, Middle East, & Africa:
+49 6251-133-0

North America:
+1-888-441-9982

te.com

ENTRELEC, TE Connectivity, TE Connectivity (logo) and Every Connection Counts are trademarks. All other logos, products and/or company names referred to herein might be trademarks of their respective owners.

All other logos, products and/or company names referred to herein might be trademarks of their respective owners.

The information given herein, including drawings, illustrations and schematics which are intended for illustration purposes only, is believed to be reliable. However, TE Connectivity makes no warranties as to its accuracy or completeness and disclaims any liability in connection with its use. TE Connectivity's obligations shall only be as set forth in TE Connectivity's Standard Terms and Conditions of Sale for this product and in no case will TE Connectivity be liable for any incidental, indirect or consequential damages arising out of the sale, resale, use or misuse of the product. Users of TE Connectivity products should make their own evaluation to determine the suitability of each such product for the specific application.

© 2020 TE Connectivity Ltd. family of companies All Rights Reserved.

1-1773980-7 02/20 - Printed in France (PDF)

TE Connectivity

3, rue Jean Perrin
69687 Chassieu cedex
France

Tel: +33 481923100

www.te.com/