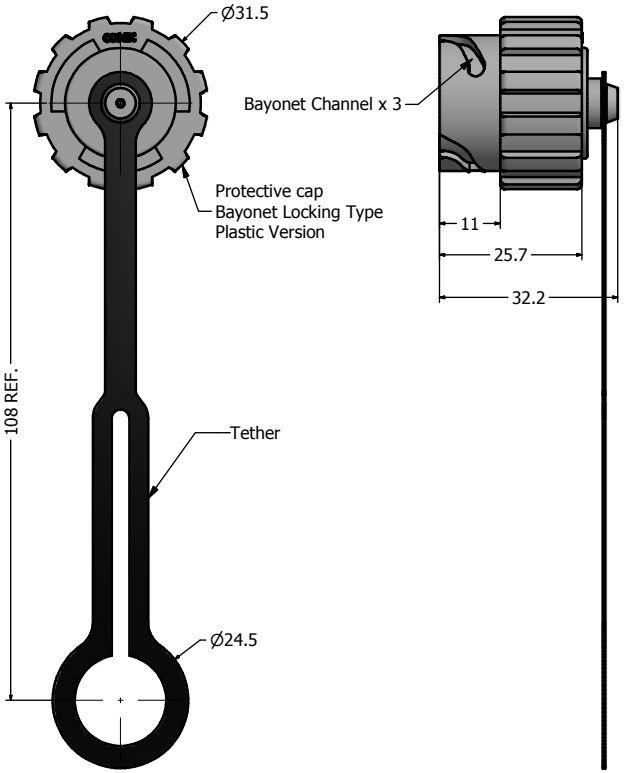

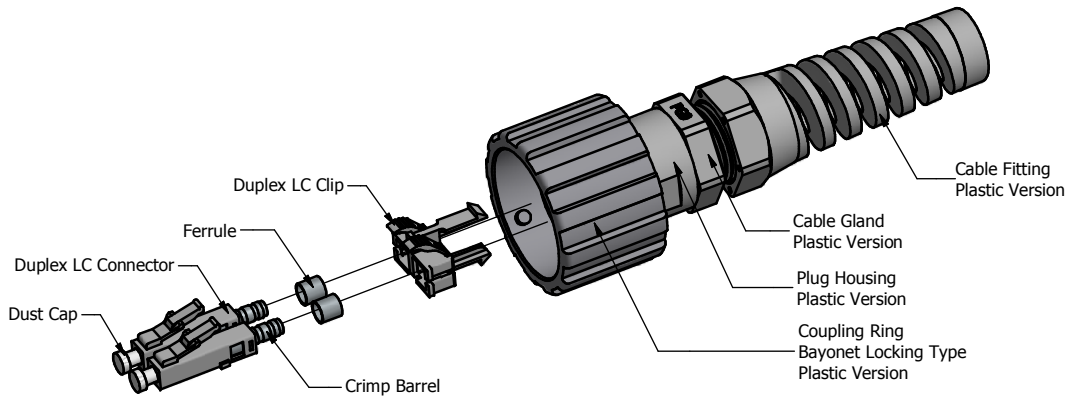

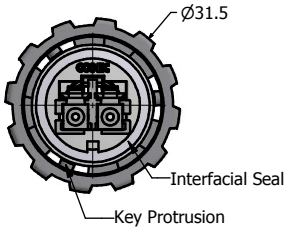

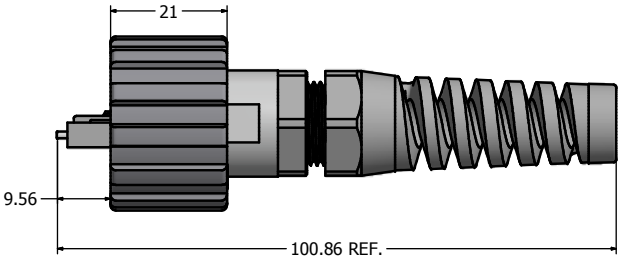

Notes:

1. Material and Finish:
   - Coupler Ring: Polyester (Black); UL94 V-0
   - Plug Housing: Polyester (Black): UL94 V-0
   - Cable Gland: PA (Black), UL94 V-0
   - Cable Gland Rubber Ring: NBR, Color: Black
   - Cable Fitting: PA (Black), UL94 V-0
   - Interfacial Seal: Silicon, Color: White
   - Protective Cap: Polyester (Black); UL94 V-0
   - Tether: Polycarbonate (Black)

(b) Duplex LC Connector
   - Housing: PEI , UL94 V-0,
     Color: **SM Blue/MM Beige/APC SM Green**
   - Inner Sub Assembly: Zirconia, Metal and PTFE
   - Crimp Barrel: Brass, Nickel Plated
   - Ferrlue: Brass, Nickel Plated
   - Dust Cap: PC, Color: White
   - Duplex LC Clip: PC, Color: Black
   - Operating Temperature: -40~C to +85~C

2. IP67 rated when covered or fully mated with the appropriate mating connector
3. Accepts 4.5mm to 8.0mm outside diameter fiber optic cable

Directive 2002/95/EC RoHS Compliant

Description	Part Number
Plastic Duplex LC Single Mode Plug Kit + Plug Cover Assembly	17-300200
Plastic Duplex LC Multi Mode Plug Kit + Plug Cover Assembly	17-300210
Plastic Duplex LC APC Single Mode Plug Kit + Plug Cover Assembly	17-300220

THIS DRAWING MAY NOT BE COPIED OR REPRODUCED IN ANY WAY, NOR MAY IT BE DISCLOSED TO A THIRD PARTY WITHOUT WRITTEN PERMISSION. OWNERSHIP AND COPYRIGHT OF CONEC CORPORATION.

DO NOT ALTER CAD DRAWING BY HAND

Customer:

Name	Title	Approval Date

Rev.	Changes	Date	Name
c	1 x c	Sep/25/2013	Vincent Ke
b	1 x b	Jul/12/2011	Vincent ke
a	original		

Tolerance
Unless otherwise specified (C)
0 PLC ± 0.50
1 PLC ± 0.38
2 PLC ± 0.25
3 PLC ± 0.10
ANGLES ± 3°

Autodesk Inventor

2011	Date	Name
Draw.	Mar. 04	Vincent Ke
Appd.	Mar. 04	J. Chaudry
Norm		
D-old		

CONEC®

Scale: NTS
Dim. in mm
Material: See Notes
Title: IP67 Industrial Duplex LC Plug + Protective Cap Assembly Kit Plastic Version
Drawing No.: 17K1A216
DIN A3
Part No.: SEE P/N ABOVE
Sheet 1/1