SD-19711-420

MATERIAL NUMBER	ENGINEERING NUMBER	CUSTOMER NUMBER	CARRIER	PLATING SEE NOTE 6 & 7.	DIMENSION "A"	DIMENSION "B"	HOLE
197114001	19711-4001	-	LOOSE	TIN/LEAD	.300	.250	YES
197114003	19711-4003	-	STRIP	TIN/LEAD	.300	.250	YES
197114005	19711-4005	-	LOOSE	TIN/LEAD	.300	.250	OMIT
197114007	19711-4007	-	STRIP	TIN/LEAD	.300	.250	OMIT

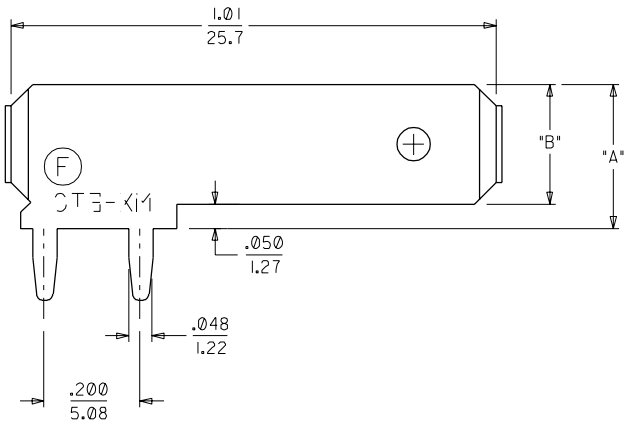

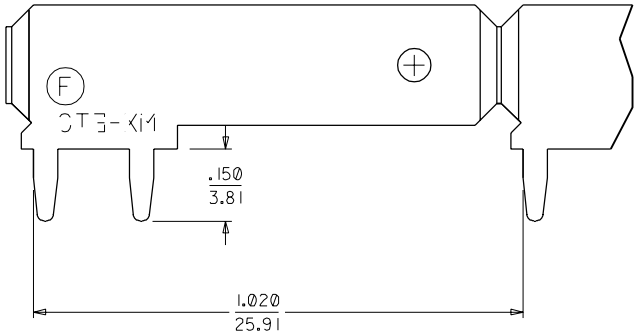

PROGRESSION

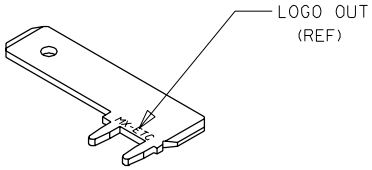

ISOMETRIC VIEW

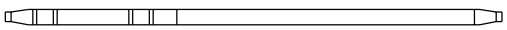

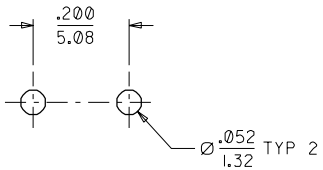

RECOMMENDED P.W.B.
HOLE LAYOUT

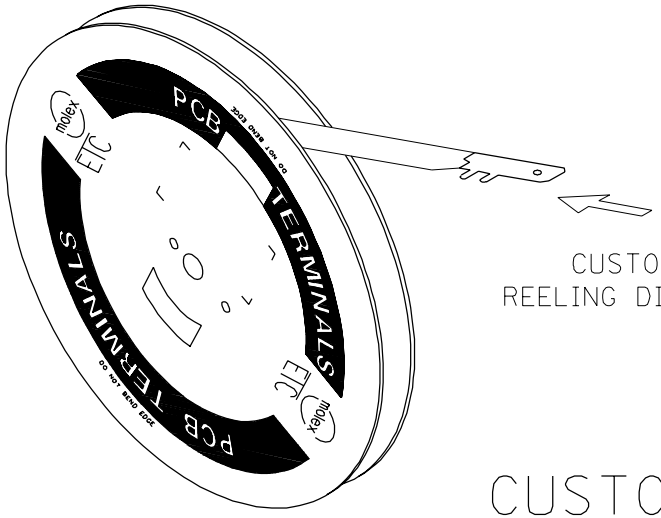

CUSTOMER
REELING DIRECTION

CUSTOMER DRAWING

NOTES:
1. BARE EDGES PERMISSIBLE AT CARRIER CUT OFF.
2. MATERIAL: BRASS.
3. MATERIAL THICKNESS: .032 ±.001/(0.813 ±0.03)
4. TAB CONFORMS TO NEMA SPECIFICATIONS.
5. ALL DIMENSIONS AND NOTES ARE REFERENCE ONLY UNLESS NOTED.
6. PLATING: THICKNESS:90/10 TIN/LEAD: 150 μ in(3.81μm) MIN THICKNESS.
7. FINISH: MATTE

PLOT

REV	DESCRIPTION	EC NO.	DRWN:	CHK:	APPR:
L	MOVED LOGO FARSD	ETC2002-0182	BRE 01/12/12	HEB 01/12/12	RWD 01/12/12

QUALITY SYMBOLS: MAJOR = Ø; CRITICAL (C) = Ø

GENERAL TOLERANCES: (UNLESS SPECIFIED)

	mm	INCH
4 PLACES	±0.	±.
3 PLACES	±0.	±.005
2 PLACES	±0.13	±.01
1 PLACE	±0.25	±.
ANGULAR: ±1/2°		

DRAFT WHERE APPLICABLE MUST REMAIN WITHIN DIMENSIONS

SCALE 5:1 | DESIGN UNITS ☐mm ☒INCH | THIRD ANGLE PROJECTION | DIMENSIONS: ☐ mm/INCH ☒ INCH/mm ☐ mm ONLY | SHT | REV | REVISE ON CAD ONLY

DRAWN BY & DATE: JH 98/04/28
CHECKED BY & DATE: RWD 98/04/28
APPROVED BY & DATE: RWD 98/04/28

TITLE: QUICK DISCONNECT PCB MOUNTABLE .250 X .032 TAB

molex MOLEX INCORPORATED

CAD FILENAME: SD-19711-400 .DGN | MATERIAL NO.: SEE CHART | DRAWING NO.: SD-19711-400 | SHEET NO.: 1 OF 1

THIS DRAWING CONTAINS INFORMATION THAT IS PROPRIETARY TO MOLEX INCORPORATED AND SHOULD NOT BE USED WITHOUT WRITTEN PERMISSION.

SIZE C

LBORD.DGN REV A 96/06/12 LEVEL 5