REVISIONS			
REV	DESCRIPTION	DATE	APPV
A	PRODUCTION RELEASE	JHAGER 5/5/21	DV 5/6/21

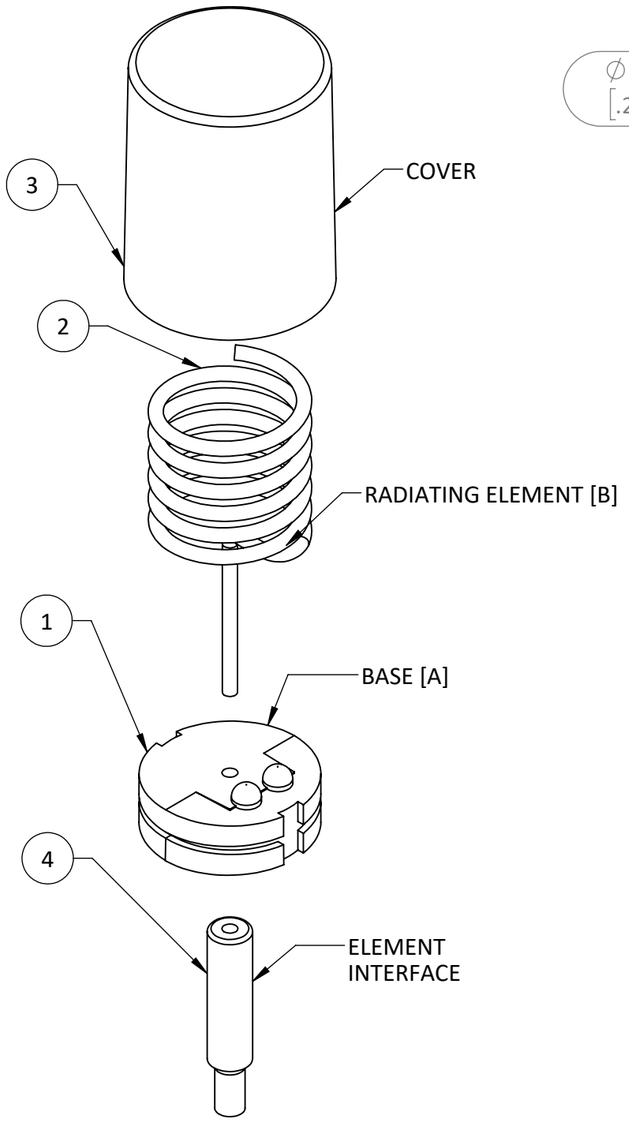

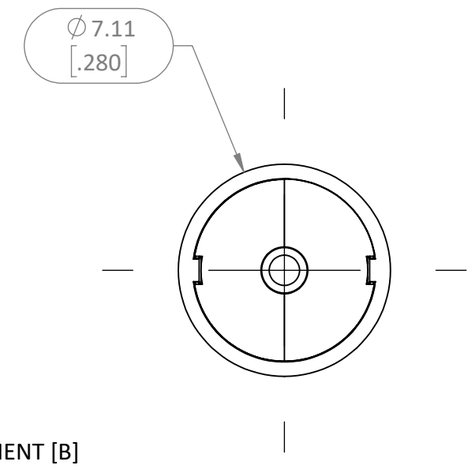

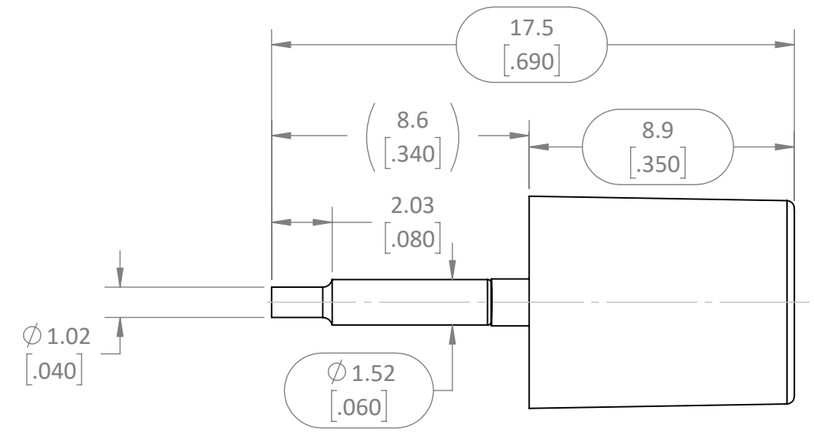

NOTES: (UNLESS OTHERWISE SPECIFIED)

1. ALL DIMENSIONS ARE IN MILLIMETERS [IN].
2. DIMENSIONS APPLY AFTER FINISHING.
3. MANUFACTURE TO BE COMPLIANT WITH EU RoHS DIRECTIVE,USE MATERIALS THAT DO NOT CONTAIN REACH SUBSTANCES OF VERY HIGH CONCERN >1000ppm, AND USE DRC CONFLICT-FREE SOURCED MATERIALS.
4. ALL UNLISTED GEOMETRY CONTROLLED BY SOLID MODEL AT LATEST REVISION.
5. FREQUENCY: SEE TABLE
6. IMPEDANCE: 50Ω
7. CONNECTION TYPE: DIRECT SOLDER THROUGH MOUNT TINNED Ø1.0 MM LEAD AS SHOWN.
8. TEMPERATURE: -40º - +90ºC
9. PEAK GAIN: SEE TABLE
10. VSWR: SEE TABLE

BILL OF MATERIALS

ITEM	QTY.	Unit	PART NUMBER	Description
1	1	EA	MEC-ANT-JJB-BAS-XXX	BASE, ANT, JJB, ABS [A-COLOR]
2	1	EA	MEC-ANT-JJB-CL-XXX	COIL, ANT, JJB, [B-FREQUENCY]
3	1	EA	MEC-ANT-JJB-CAP	CAP, ANT, JJB, NYLON, BLAC
4	1		MEC-ANT-JJB-PIN-ST	PIN, ANT, JJB, BRAS

PART NUMBER	BASE COLOR [A]	COIL TYPE [B]	VSWR	PEAK GAIN
ANT-868-JJB-ST	GREY	868MHZ [855-880MHz]	<2.0	-1.0dBi
ANT-916-JJB-ST	YELLOW	916MHz [901-931MHz]	<2.0	-0.5dBi
ANT-2.4-JJB-ST	PINK	2.4GHz [2390-2480MHz]	<2.0	3.3dBi

WARNING: THIS DRAWING CONTAINS PROPRIETARY INFORMATION THAT IS THE SOLE PROPERTY OF LINX TECHNOLOGIES, AND SHALL BE TREATED AS SUCH. NO DISCLOSURE OR REPRODUCTION OF THIS DOCUMENT IS PERMITTED, IN WHOLE OR IN PART, WITHOUT THE EXPRESS WRITTEN PERMISSION OF LINX TECHNOLOGIES OR ITS DESIGNATED AGENTS.

TE connectivity
159 ORT LANE
MERLIN, OR 97532

MATERIAL: NYLON-66 BLACK ABS-FREQ COLOR

WEIGHT:

FINISH:

INTERPRET DIMENSIONS AND TOLERANCES PER ASME Y14.5.

.X ±2.0
.XX ±1.00
.XXX ±.500

ANGLES: ±1°
SURFACE: 32

PROJECTION:

DRAWN: JHAGER DT: 5/5/21

ENGR: DASARATHAN DT: 26-DEC-11

TITLE: JJB ANTENNA, TABULATED, STRAIGHT PIN

SIZE: B

DWG. NO.: C-ANT-xxx-JJB-ST

REV: A

SCALE: 5:1

DO NOT SCALE DRAWING

SHEET 1 OF 1

LDCFDFB_B