Product data sheet

PAC50-DCD

PAC50

PRESSURE SWITCH

SICK
Sensor Intelligence.

Illustration may differ

Ordering information

Type	Part no.
PAC50-DCD	1062992

Other models and accessories → www.sick.com/PAC50

Detailed technical data

Features

Medium	Dry compressed air
Pressure type	Gauge pressure
Pressure unit	bar
Measuring range	0 bar ... 10 bar
Overpressure safety	15 bar
Process temperature	0 °C ... +60 °C
Analog signal output and ohmic load R_A	Optional, 4 mA ... 20 mA / 0 V... 10 V. Automatic detection depending on connected load or programmable. Output signals can be inverted: 20 mA ... 4 mA / 10 V ... 0 V Load resistance for current output < 600 Ohm Load resistance with current output > 3 kOhm
Zero point adjustment	Max. + 5 % of span
Output signal	IO-Link/PNP + PNP/NPN/Push-Pull
Diagnostics output	Switching output 2 can be set as diagnostics output
Display	LCD with LED backlight (green/red), can be rotated electronically by 180° Pressure display: 4 digits, 16 segments Pressure unit in display can be switched: bar, MPa, kPa, psi and inHg Update: 1,000, 500, 200, 100 ms (adjustable)
Initialization time	300 ms

Mechanics/electronics

Process connection	PIF 4 mm + G ¼ [1]
Housing material	Housing: polycarbonate, Buttons: TPE, DIN rail mounting: POM, seals: NBR
Connection type	M12 round connector x 1, 4-pin

[1] Bottom side: push-in fitting for 4 mm pneumatic hose, back side: thread G ¼ female according to DIN ISO 16030.
[2] Enclosure rating IP per IEC 60529. The enclosure rating classes specified only apply when connected with female connectors that provide the corresponding enclosure rating.

Supply voltage	17 V DC ... 30 V DC
Power consumption	Max. 40 mA at L^+ = 24 VDC
Electrical safety	Protection class: III Overvoltage protection: 32 V DC Short-circuit protection: Q_A, Q_1, Q_2 towards M and L^+ Reverse polarity protection: L^+ to M
CE-conformity	EMC directive: 2004/108/EC, EN 61326-2-3
Weight sensor	Approx. 40 g
Enclosure rating	IP65 [2)] IP67 [2)]
Protection class III	✓
RoHS certificate	✓
cRUus certificate	✓
MTTF	243.01 years

[1)] Bottom side: push-in fitting for 4 mm pneumatic hose, back side: thread G ¼ female according to DIN ISO 16030.
[2)] Enclosure rating IP per IEC 60529. The enclosure rating classes specified only apply when connected with female connectors that provide the corresponding enclosure rating.

Performance

Non-linearity	≤ ± 0.5 %, of span (Best Fit Straight Line, BFSL) according to IEC 61298-2
Accuracy	≤ ± 1.5 % of the span
Setting accuracy of switching outputs	≤ ± 0.2 % of span
Non-repeatability	≤ ± 0.2 % of the span
Rated temperature range	+10 °C ... +60 °C

Ambient data

Ambient temperature	0 °C ... +60 °C
Storage temperature	–20 °C ... +80 °C
Relative humidity	≤ 90 %
Shock load	Max. 30 g, xyz according to IEC 60068-2-27 (11 ms, mechanical shock)
Vibration load	Max. 5 g (10 ... 150 Hz), xyz, to DIN EN 60068-2-6

Classifications

eCl@ss 5.0	27200620
eCl@ss 5.1.4	27200620
eCl@ss 6.0	27200620
eCl@ss 6.2	27200620
eCl@ss 7.0	27200620
eCl@ss 8.0	27200620
eCl@ss 8.1	27200620
eCl@ss 9.0	27200620
eCl@ss 10.0	27200620
eCl@ss 11.0	27200620
eCl@ss 12.0	27200620
ETIM 5.0	EC000243

ETIM 6.0	EC000243
ETIM 7.0	EC000243
ETIM 8.0	EC000243
UNSPSC 16.0901	41112409

Dimensional drawing (Dimensions in mm (inch))

Bottom side: push-in fitting for 4 mm pneumatic hose, back side: thread G ¼ female

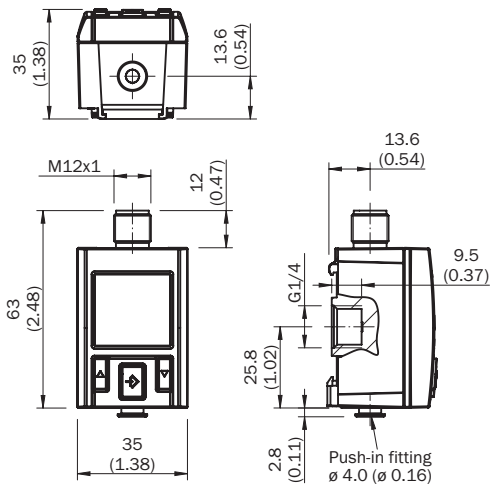

Connection type

M12 round connector x 1, 4-pin

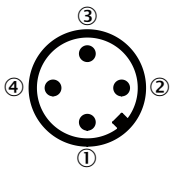

Output signals	Type code	Electrical connection	Pin assignment
2 x digital	PAC50-xxA	M12 x 1, 4 pins	L+ = 1, M = 3, Q1 = 4, Q2 = 2
1 x digital + analog	PAC50-xxB	M12 x 1, 4 pins	L+ = 1, M = 3, Q1 = 4, QA = 2
1 x IO-Link/digital + digital	PAC50-xxD	M12 x 1, 4 pins	L+ = 1, M = 3, C/Q1 = 4, Q2 = 2

Instruction for installation

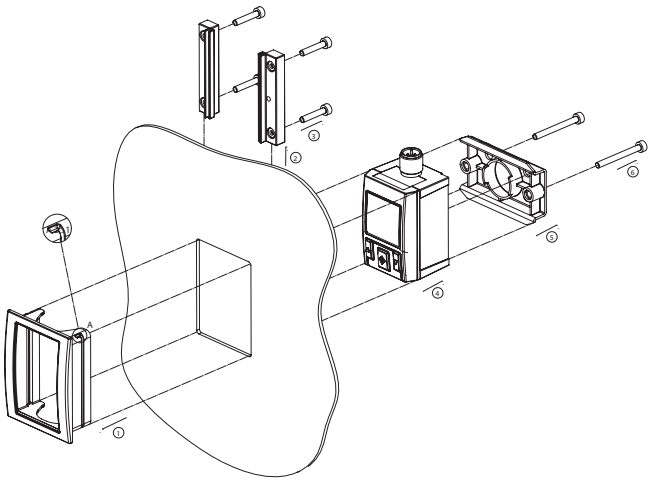

Opening in the switch panel

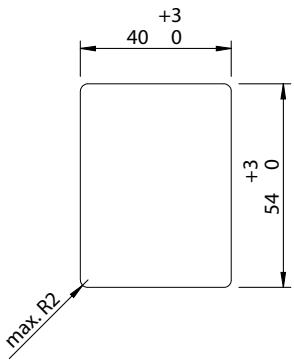

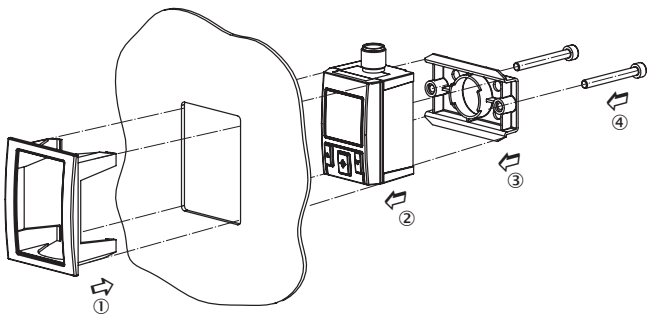

Mounting bracket

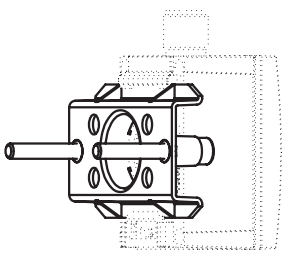

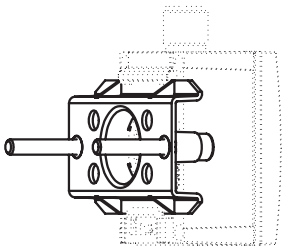

Recommended accessories

Other models and accessories ➜ www.sick.com/PAC50

	Brief description	Type	Part no.
Fieldbus modules			
	Number of IO-Link ports: 4; Communication mode: COM1/COM2; IO-Link version: IO-Link V1.0; Switching input: PNP; Supply voltage Vs, IO-Link ports: DC 24 V; Current loading: 800 mA; Data transmission rate: Max. 12 MBaud, Autobaud; Address space occupation: 1 bis 126; Connection type: Connector M12; Connection type, IO-Link ports: Connector M12, 5-pin; Suppyl voltage Vs, module: DC 18 ... 30 V; Power consumption: Typ. 75 mA / max. 100 mA (at UL with DC 24 V), Typ. 25 mA + sensor current / max. 80	IOLSHPB-P3104R01	6039728
Mounting brackets and plates			
	Wall-mounting kit; mounting element for wall-mounting of pressure switch PAC50, Mounting element: polycarbonate, screws: steel, zinc-coated	BEF-MA-WLM-NTS-PAC5	2069198
Terminal and alignment brackets			
	Switch panel installation set for rugged applications (shock, vibration) for installing the PAC50 pressure switch. Maximum switch panel thickness: 5 mm, Stainless steel, aluminum, plastic	BEF-MA-CTRLPX-PAC5	2099916

Recommended services

Additional services ➜ www.sick.com/PAC50

	Type	Part no.
Function Block Factory		
• **Description:** The Function Block Factory supports common programmable logic controllers (PLCs) from various manufacturers, such as Siemens, Beckhoff, Rockwell Automation and B&R. More information on the FBF can be found here. • **Note:** You can configure your function block at Function Block Factory. As a login please use your SICK ID.	Function Block Factory	On request

SICK AT A GLANCE

SICK is one of the leading manufacturers of intelligent sensors and sensor solutions for industrial applications. A unique range of products and services creates the perfect basis for controlling processes securely and efficiently, protecting individuals from accidents and preventing damage to the environment.

We have extensive experience in a wide range of industries and understand their processes and requirements. With intelligent sensors, we can deliver exactly what our customers need. In application centers in Europe, Asia and North America, system solutions are tested and optimized in accordance with customer specifications. All this makes us a reliable supplier and development partner.

Comprehensive services complete our offering: SICK LifeTime Services provide support throughout the machine life cycle and ensure safety and productivity.

For us, that is "Sensor Intelligence."

WORLDWIDE PRESENCE:

Contacts and other locations –www.sick.com

SICK
Sensor Intelligence.