Product data sheet

PAC50-ACC

PAC50

PRESSURE SWITCH

SICK
Sensor Intelligence.

Illustration may differ

Ordering information

Type	Part no.
PAC50-ACC	1062953

Other models and accessories → www.sick.com/PAC50

Detailed technical data

Features

Medium	Dry compressed air
Pressure type	Gauge pressure
Pressure unit	bar
Measuring range	–1 bar ... 0 bar
Overpressure safety	5 bar
Process temperature	0 °C ... +60 °C
Analog signal output and ohmic load R_A	Optional, 4 mA ... 20 mA / 0 V... 10 V. Automatic detection depending on connected load or programmable. Output signals can be inverted: 20 mA ... 4 mA / 10 V ... 0 V Load resistance for current output < 600 Ohm Load resistance with current output > 3 kOhm
Zero point adjustment	Max. + 5 % of span
Output signal	2 x PNP/NPN/Push-Pull + 4 mA ... 20 mA / 0 V ... 10 V
Diagnostics output	Switching output 2 can be set as diagnostics output
Display	LCD with LED backlight (green/red), can be rotated electronically by 180° Pressure display: 4 digits, 16 segments Pressure unit in display can be switched: bar, MPa, kPa, psi and inHg Update: 1,000, 500, 200, 100 ms (adjustable)
Initialization time	300 ms

Mechanics/electronics

Process connection	PIF 4 mm + G ¼ [1)]
Housing material	Housing: polycarbonate, Buttons: TPE, DIN rail mounting: POM, seals: NBR
Connection type	Round connector M12 x 1, 5-pin
Supply voltage	17 V DC ... 30 V DC
Power consumption	Max. 40 mA at L^+ = 24 VDC
Electrical safety	Protection class: III

[1)] Bottom side: push-in fitting for 4 mm pneumatic hose, back side: thread G ¼ female according to DIN ISO 16030.
[2)] Enclosure rating IP per IEC 60529. The enclosure rating classes specified only apply when connected with female connectors that provide the corresponding enclosure rating.

	Overvoltage protection: 32 V DC Short-circuit protection: Q_A, Q_1, Q_2 towards M and L^+ Reverse polarity protection: L^+ to M
CE-conformity	EMC directive: 2004/108/EC, EN 61326-2-3
Weight sensor	Approx. 40 g
Enclosure rating	IP65 [2)] IP67 [2)]
Protection class III	✓
RoHS certificate	✓
cRUus certificate	✓
MTTF	243.72 years

[1)] Bottom side: push-in fitting for 4 mm pneumatic hose, back side: thread G ¼ female according to DIN ISO 16030.

[2)] Enclosure rating IP per IEC 60529. The enclosure rating classes specified only apply when connected with female connectors that provide the corresponding enclosure rating.

Performance

Non-linearity	≤ ± 0.5 %, of span (Best Fit Straight Line, BFSL) according to IEC 61298-2
Accuracy	≤ ± 1.5 % of the span
Setting accuracy of switching outputs	≤ ± 0.2 % of span
Non-repeatability	≤ ± 0.2 % of the span
Rated temperature range	+10 °C ... +60 °C

Ambient data

Ambient temperature	0 °C ... +60 °C
Storage temperature	–20 °C ... +80 °C
Relative humidity	≤ 90 %
Shock load	Max. 30 g, xyz according to IEC 60068-2-27 (11 ms, mechanical shock)
Vibration load	Max. 5 g (10 ... 150 Hz), xyz, to DIN EN 60068-2-6

Classifications

eCl@ss 5.0	27200620
eCl@ss 5.1.4	27200620
eCl@ss 6.0	27200620
eCl@ss 6.2	27200620
eCl@ss 7.0	27200620
eCl@ss 8.0	27200620
eCl@ss 8.1	27200620
eCl@ss 9.0	27200620
eCl@ss 10.0	27200620
eCl@ss 11.0	27200620
eCl@ss 12.0	27200620
ETIM 5.0	EC000243
ETIM 6.0	EC000243
ETIM 7.0	EC000243
ETIM 8.0	EC000243

UNSPSC 16.0901	41112409

Dimensional drawing (Dimensions in mm (inch))

Bottom side: push-in fitting for 4 mm pneumatic hose, back side: thread G ¼ female

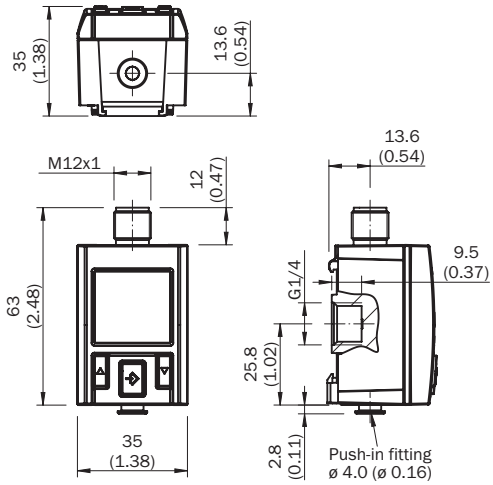

Connection type

Round connector M12 x 1, 5-pin

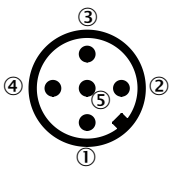

Output signals	Type code	Electrical connection	Pin assignment
2 x digital + analog	PAC50-xxC	M12 x 1, 5 pins	L+ = 1, M = 3, Q1 = 4, Q2 = 2, QA = 5
1 x IO-Link/digital + digital + analog	PAC50-xxF	M12 x 1, 5 pins	L+ = 1, M = 3, C/Q1 = 4, Q2 = 2, QA = 5

Instruction for installation

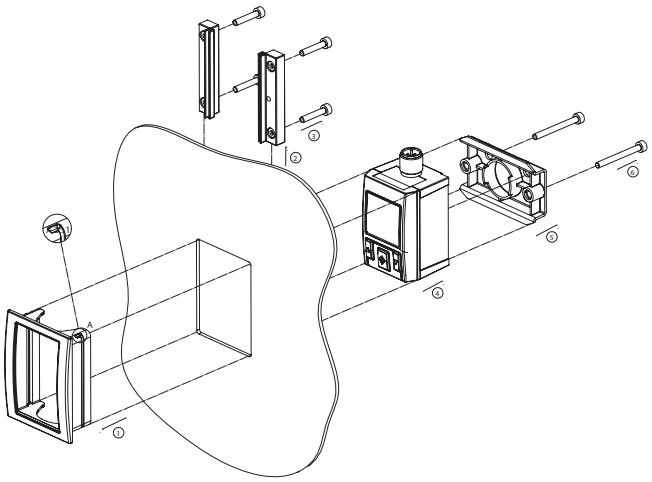

Opening in the switch panel

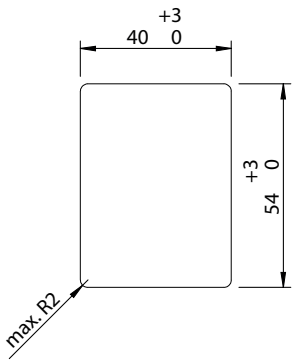

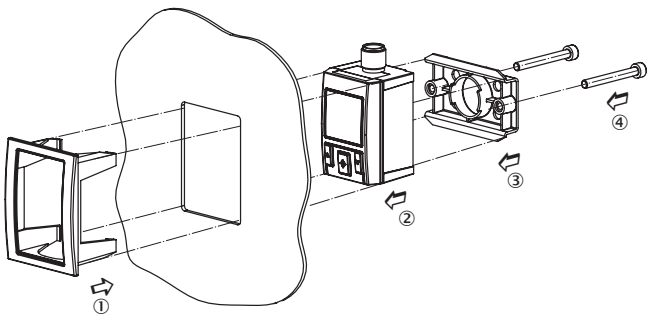

Mounting bracket

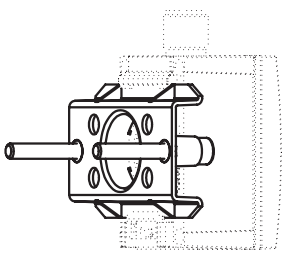

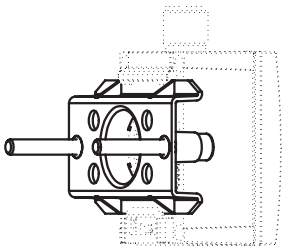

Recommended accessories

Other models and accessories ➜ www.sick.com/PAC50

	Brief description	Type	Part no.
Mounting brackets and plates			
	Wall-mounting kit; mounting element for wall-mounting of pressure switch PAC50, Mounting element: polycarbonate, screws: steel, zinc-coated	BEF-MA-WLM-NTS-PAC5	2069198
Terminal and alignment brackets			
	Switch panel installation set for rugged applications (shock, vibration) for installing the PAC50 pressure switch. Maximum switch panel thickness: 5 mm, Stainless steel, aluminum, plastic	BEF-MA-CTRLPX-PAC5	2099916

SICK AT A GLANCE

SICK is one of the leading manufacturers of intelligent sensors and sensor solutions for industrial applications. A unique range of products and services creates the perfect basis for controlling processes securely and efficiently, protecting individuals from accidents and preventing damage to the environment.

We have extensive experience in a wide range of industries and understand their processes and requirements. With intelligent sensors, we can deliver exactly what our customers need. In application centers in Europe, Asia and North America, system solutions are tested and optimized in accordance with customer specifications. All this makes us a reliable supplier and development partner.

Comprehensive services complete our offering: SICK LifeTime Services provide support throughout the machine life cycle and ensure safety and productivity.

For us, that is "Sensor Intelligence."

WORLDWIDE PRESENCE:

Contacts and other locations –www.sick.com

SICK
Sensor Intelligence.