Product data sheet

GRL18-N1137

GR18

CYLINDRICAL PHOTOELECTRIC SENSORS

SICK
Sensor Intelligence.

Illustration may differ

Ordering information

Type	Part no.
GRL18-N1137	1066553

Other models and accessories ➜ www.sick.com/GR18

Detailed technical data

Features

Functional principle	Photoelectric retro-reflective sensor
Functional principle detail	Dual lens
Dimensions (W x H x D)	18 mm x 18 mm x 71.5 mm
Housing design (light emission)	Cylindrical
Thread diameter (housing)	M18 x 1
Optical axis	Axial
Sensing range max.	0.03 m ... 7.2 m [1]
Sensing range	0.06 m ... 6 m [1]
Type of light	Visible red light
Light source	PinPoint LED [2]
Light spot size (distance)	Ø 175 mm (7 m)
Wave length	650 nm
Adjustment	Potentiometer
Indication	
LED green	Operating indicator Static on: power on
LED yellow	Status of received light beam Static on: object not present Static off: object present

[1] Reflector PL80A.
[2] Average service life: 100,000 h at T_U = +25 °C.

Mechanics/electronics

Supply voltage	10 V DC ... 30 V DC [1]
Ripple	< 5 V_{pp} [2]
Current consumption	30 mA
Switching output	NPN
Output function	Complementary
Switching mode	Light/dark switching
Signal voltage NPN HIGH/LOW	Approx. V_S / ≤ 3 V
Output current $I_{max.}$	≤ 100 mA [3]
Response time	< 500 µs [4]
Switching frequency	1,000 Hz [5]
Connection type	Cable, 4-wire, 2 m [6]
Cable material	PVC
Circuit protection	A [7] B [8] D [9]
Protection class	III
Polarisation filter	✓
Housing material	Plastic, ABS
Optics material	Plastic, PMMA
Enclosure rating	IP67
Items supplied	Fastening nuts (2 x)
Electromagnetic compatibility (EMC)	EN 60947-5-2
Ambient operating temperature	–25 °C ... +55 °C [10]
Ambient temperature, storage	–40 °C ... +70 °C
UL File No.	E348498

[1] Limit values. Operated in short-circuit protected network: max. 8 A.
[2] May not exceed or fall below U_V tolerances.
[3] At Uv > 24 V or ambient temperature > 49 °C, IA max. = 50 mA.
[4] Signal transit time with resistive load.
[5] With light/dark ratio 1:1.
[6] Do not bend below 0 °C.
[7] A = V_S connections reverse-polarity protected.
[8] B = inputs and output reverse-polarity protected.
[9] D = outputs overcurrent and short-circuit protected.
[10] At U_V <=24V and I_A<50mA.

Classifications

eCl@ss 5.0	27270902
eCl@ss 5.1.4	27270902
eCl@ss 6.0	27270902
eCl@ss 6.2	27270902
eCl@ss 7.0	27270902
eCl@ss 8.0	27270902

eCl@ss 8.1	27270902
eCl@ss 9.0	27270902
eCl@ss 10.0	27270902
eCl@ss 11.0	27270902
eCl@ss 12.0	27270902
ETIM 5.0	EC002717
ETIM 6.0	EC002717
ETIM 7.0	EC002717
ETIM 8.0	EC002717
UNSPSC 16.0901	39121528

Connection diagram

Cd-094

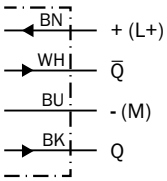

Characteristic curve

GRL18S

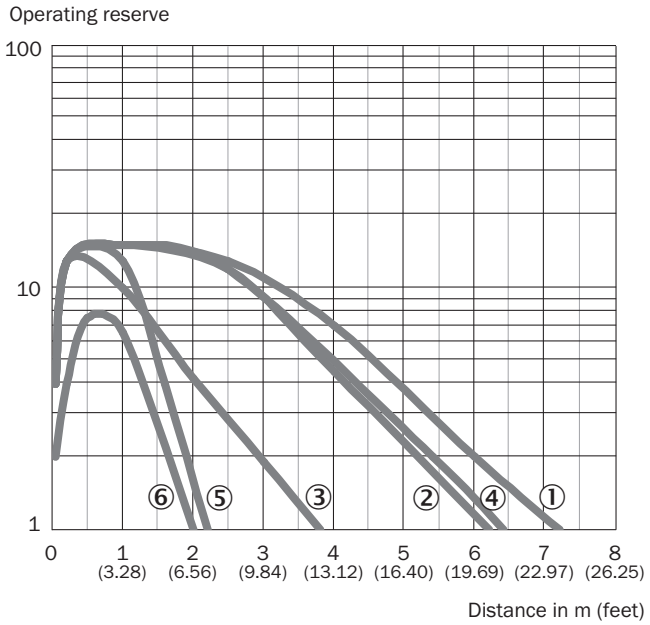

① Reflector PL80A
② Reflector PL40A
③ Reflector PL20A
④ Reflector P250
⑤ Reflector PL22
⑥ Reflective tape REF-Plus 3436

Light spot size

GRL18S

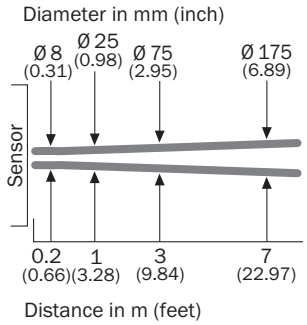

Sensing range diagram

GRL18S

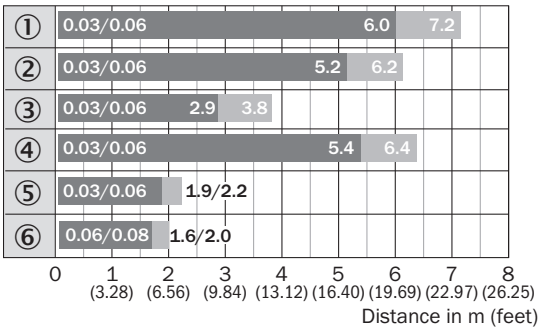

Sensing range Sensing range max.

① Reflector PL80A
② Reflector PL40A
③ Reflector PL20A
④ Reflector P250
⑤ Reflector PL22
⑥ Reflective tape REF-Plus 3436

Response range

GRL18S

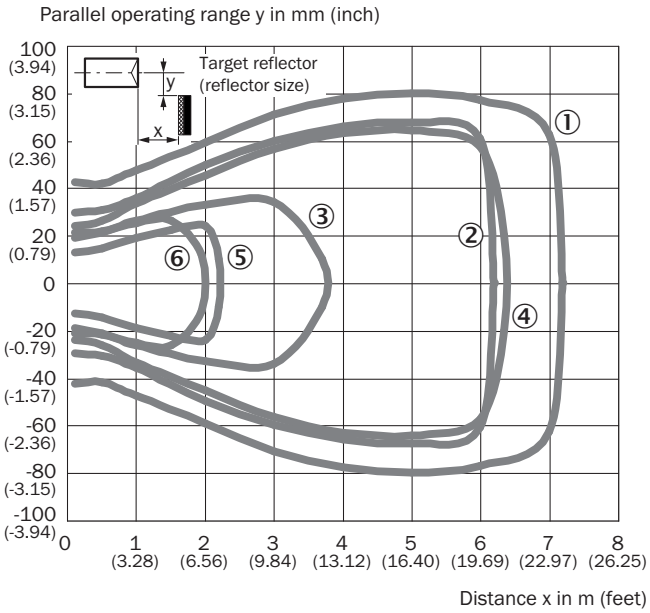

① Reflector PL80A
② Reflector PL40A
③ Reflector PL20A
④ Reflector P250
⑤ Reflector PL22
⑥ Reflective tape REF-Plus 3436

Adjustments

GRL18(S), GRSE18(S), Sensitivity setting: Potentiometer, 270°

Dimensional drawing (Dimensions in mm (inch))

GRTE18, GRL18, GRSE18, plastic, cable, straight

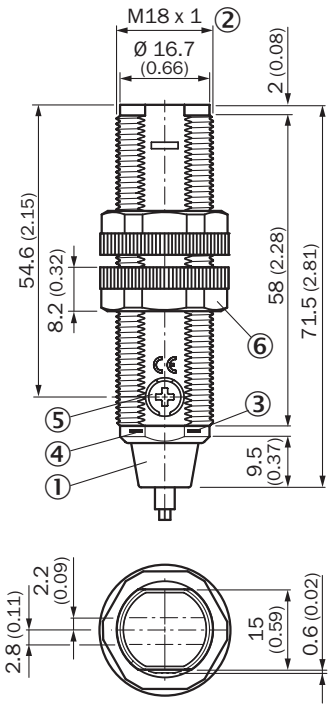

① Connection cable 2 m
② Threaded mounting hole M18 x 1
③ LED indicator yellow
④ LED indicator green
⑤ Sensitivity control: potentiometer 270°
⑥ Fastening nuts (2 x); width across 22, plastic

Recommended accessories

Other models and accessories ➜ www.sick.com/GR18

	Brief description	Type	Part no.
Mounting brackets and plates			
	Mounting bracket for M18 sensors, steel, zinc coated, without mounting hardware	BEF-WN-M18	5308446
	Universal mounting bracket for reflectors, steel, zinc coated	BEF-WN-REFX	2064574
Plug connectors and cables			
	Head A: male connector, M12, 4-pin, straight Cable: unshielded	STE-1204-G	6009932

SICK AT A GLANCE

SICK is one of the leading manufacturers of intelligent sensors and sensor solutions for industrial applications. A unique range of products and services creates the perfect basis for controlling processes securely and efficiently, protecting individuals from accidents and preventing damage to the environment.

We have extensive experience in a wide range of industries and understand their processes and requirements. With intelligent sensors, we can deliver exactly what our customers need. In application centers in Europe, Asia and North America, system solutions are tested and optimized in accordance with customer specifications. All this makes us a reliable supplier and development partner.

Comprehensive services complete our offering: SICK LifeTime Services provide support throughout the machine life cycle and ensure safety and productivity.

For us, that is "Sensor Intelligence."

WORLDWIDE PRESENCE:

Contacts and other locations –www.sick.com

SICK
Sensor Intelligence.