Product data sheet

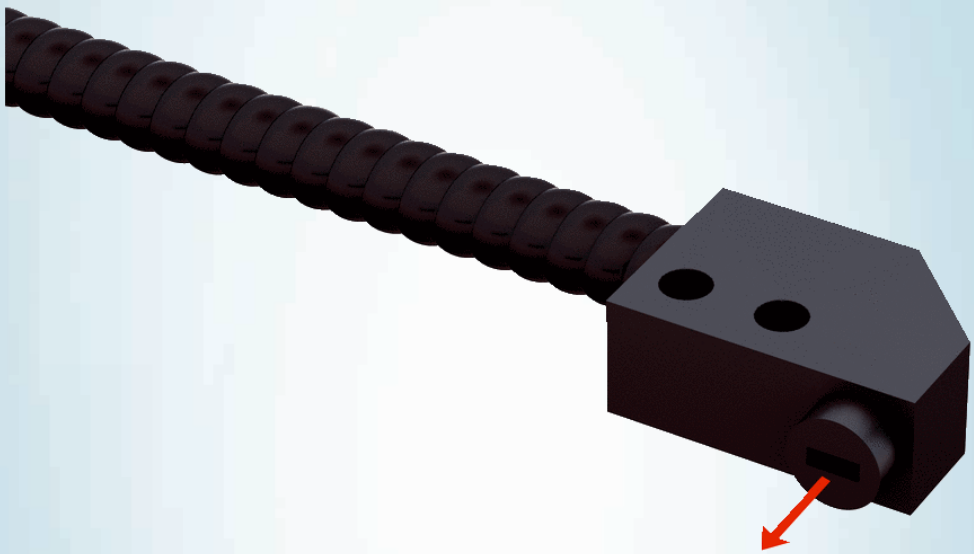

LL3-LM38750

LL3

FIBERS

SICK
Sensor Intelligence.

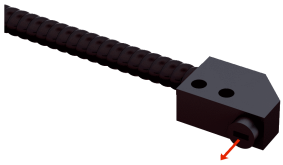

Illustration may differ

Ordering information

Type	Part no.
LL3-LM38750	2073503

Other models and accessories → www.sick.com/LL3

Detailed technical data

Features

Device type	Fibers, fiber suitable for WLL260
Functional principle	Through-beam system
Functional principle detail	Consisting of a sender and a receiver
For fiber-optic sensor	GLL170(T), WLL180
Fiber length	750 mm
Fiber material	Glass
Jacket material	Polyvinylchlorid (PVC)
Fiber head material	Chrome-plated metal coil
Outer diameter, fiber-optic cable connection	2.2 mm
Fiber-optic head design	Flat type, 90° deflection
Fiber arrangement	Multi-fiber – linear arrangement
Core structure	Multi-fiber – linear arrangement
Angle of dispersion < 60°	No
Compatibility with infrared light (1,450 nm)	Yes [1]
Highly flexible/elastic fibers (bend radius 1–4 mm)	No
Adapter end sleeves required	No
Angle of dispersion	60°
Integrated lens	No
Minimal object diameter	0.5 mm
Compatibility tip adapters	No

[1] Reduced sensing ranges possible when using a fiber-optic amplifier with infrared light.

Mechanics/electronics

Bend radius, fibre-optic cable	20 mm
Ambient operating temperature	–10 °C ... +60 °C

Classifications

ECLASS 5.0	27270905
ECLASS 5.1.4	27270905
ECLASS 6.0	27270905

ECLASS 6.2	27270905
ECLASS 7.0	27270905
ECLASS 8.0	27270905
ECLASS 8.1	27270905
ECLASS 9.0	27270905
ECLASS 10.0	27270905
ECLASS 11.0	27270905
ECLASS 12.0	27270905
ETIM 5.0	EC002651
ETIM 6.0	EC002651
ETIM 7.0	EC002651
ETIM 8.0	EC002651
UNSPSC 16.0901	39121528

Sensing ranges with WLL180T

Operating mode 16 µs	100 mm
Operating mode 70 µs	330 mm
Operating mode 250 µs	650 mm
Operating mode 2 ms	1,300 mm
Operating mode 8 ms	1,350 mm
Note	Sensing ranges related to fiber-optic sensors with type of light: visible red light

Sensing ranges with GLL170

Operating mode 250 µs	325 mm

Sensing ranges with GLL170T

Operating mode 50 µs	592 mm
Operating mode 250 µs	992 mm

Dimensional drawing (Dimensions in mm (inch))

LL3-LM38750

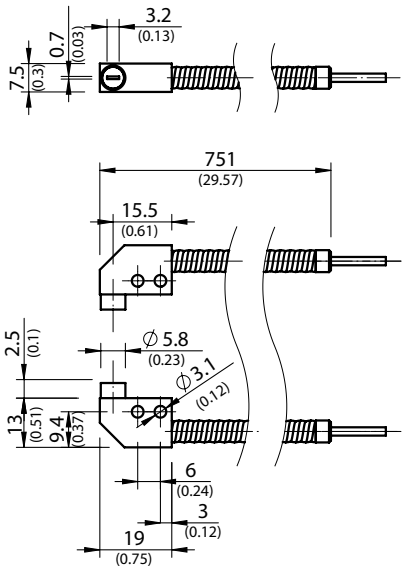

SICK AT A GLANCE

SICK is one of the leading manufacturers of intelligent sensors and sensor solutions for industrial applications. A unique range of products and services creates the perfect basis for controlling processes securely and efficiently, protecting individuals from accidents and preventing damage to the environment.

We have extensive experience in a wide range of industries and understand their processes and requirements. With intelligent sensors, we can deliver exactly what our customers need. In application centers in Europe, Asia and North America, system solutions are tested and optimized in accordance with customer specifications. All this makes us a reliable supplier and development partner.

Comprehensive services complete our offering: SICK LifeTime Services provide support throughout the machine life cycle and ensure safety and productivity.

For us, that is "Sensor Intelligence."

WORLDWIDE PRESENCE:

Contacts and other locations –www.sick.com

SICK
Sensor Intelligence.