Product data sheet

IME30-15BPPZUDSS28

IME

INDUCTIVE PROXIMITY SENSORS

SICK
Sensor Intelligence.

Illustration may differ

Ordering information

Type	Part no.
IME30-15BPPZUDSS28	1073996

Included in delivery: BEF-MU-M30 (1)

Other models and accessories → www.sick.com/IME

Detailed technical data

Features

Housing	Cylindrical thread design
Housing	Standard design
Thread size	M30 x 1.5
Diameter	Ø 30 mm
Sensing range S_n	15 mm
Installation type	Flush
Switching frequency	500 Hz
Connection type	Cable, 4-wire, 15 m
Switching output	PNP
Output function	Complementary
Electrical wiring	DC 4-wire
Enclosure rating	IP67 [1]
Special characteristic	Packaged in zip bag
Items supplied	Mounting nut, brass, nickel-plated (2x)

[1] According to EN 60529.

Mechanics/electronics

Supply voltage	10 V DC ... 30 V DC
Ripple	≤ 10 %
Voltage drop	≤ 2 V [1]
Time delay before availability	≤ 125 ms

[1] At I_a max.
[2] Supply voltage Ub and constant ambient temperature Ta.
[3] Of Sr.

Hysteresis	3 % ... 15 %
Reproducibility	≤ 2 % [2) 3)]
Temperature drift (of S_r)	± 10 %
EMC	According to EN 60947-5-2
Continuous current I_a	≤ 200 mA
No load current	≤ 10 mA
Cable material	PUR
Conductor size	0.25 mm²
Cable diameter	Ø 3.9 mm
Short-circuit protection	✓
Reverse polarity protection	✓
Power-up pulse protection	✓
Shock and vibration resistance	30 g, 11 ms/10 Hz ... 55 Hz, 1 mm
Ambient operating temperature	–25 °C ... +75 °C
Housing material	Brass, nickel-plated
Sensing face material	Plastic, PA 66
Housing length	70 mm
Thread length	54 mm
Tightening torque, max.	≤ 100 Nm
UL File No.	NRKH.E181493

[1)] At I_a max.
[2)] Supply voltage Ub and constant ambient temperature Ta.
[3)] Of Sr.

Reduction factors

Note	The values are reference values which may vary
St37 steel (Fe)	1
Stainless steel (V2A, 304)	Approx. 0.8
Aluminum (Al)	Approx. 0.45
Copper (Cu)	Approx. 0.4
Brass (Br)	Approx. 0.4

Installation note

Remark	Associated graphic see "Installation"
B	60 mm
C	30 mm
D	45 mm
F	120 mm

Classifications

ECLASS 5.0	27270101
ECLASS 5.1.4	27270101
ECLASS 6.0	27270101
ECLASS 6.2	27270101

ECLASS 7.0	27270101
ECLASS 8.0	27270101
ECLASS 8.1	27270101
ECLASS 9.0	27270101
ECLASS 10.0	27270101
ECLASS 11.0	27270101
ECLASS 12.0	27274001
ETIM 5.0	EC002714
ETIM 6.0	EC002714
ETIM 7.0	EC002714
ETIM 8.0	EC002714
UNSPSC 16.0901	39122230

Installation note

Flush installation

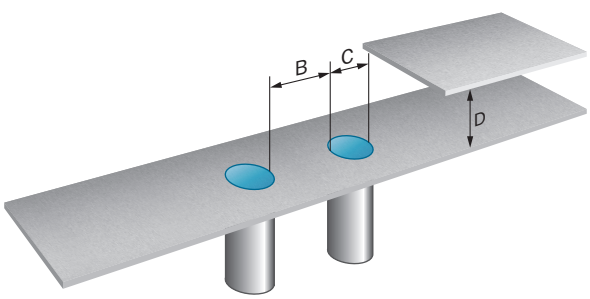

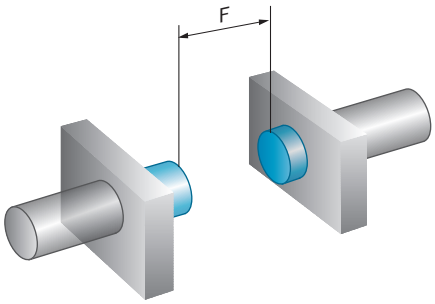

Connection diagram

Cd-005

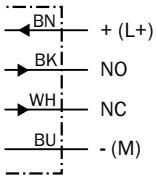

Dimensional drawing (Dimensions in mm (inch))

IME30 Standard, cable, flush

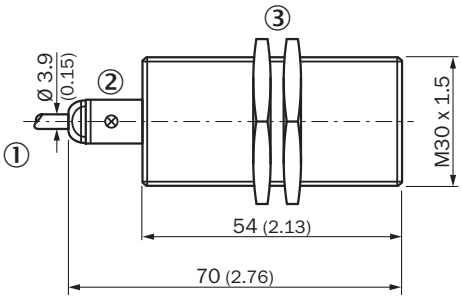

① Connection
② Display LED
③ Fastening nuts (2x); width across 36, metal

Recommended accessories

Other models and accessories ➜ www.sick.com/IME

	Brief description	Type	Part no.
Mounting brackets and plates			
	Mounting plate for M30 sensors, steel, zinc coated, without mounting hardware	BEF-WG-M30	5321871
	Mounting bracket for M30 sensors, steel, zinc coated, without mounting hardware	BEF-WN-M30	5308445

SICK AT A GLANCE

SICK is one of the leading manufacturers of intelligent sensors and sensor solutions for industrial applications. A unique range of products and services creates the perfect basis for controlling processes securely and efficiently, protecting individuals from accidents and preventing damage to the environment.

We have extensive experience in a wide range of industries and understand their processes and requirements. With intelligent sensors, we can deliver exactly what our customers need. In application centers in Europe, Asia and North America, system solutions are tested and optimized in accordance with customer specifications. All this makes us a reliable supplier and development partner.

Comprehensive services complete our offering: SICK LifeTime Services provide support throughout the machine life cycle and ensure safety and productivity.

For us, that is "Sensor Intelligence."

WORLDWIDE PRESENCE:

Contacts and other locations –www.sick.com

SICK
Sensor Intelligence.