EC No.
21893

500AMP. POWER RELAY

ENVIRONMENTALLY SEALED BOTTOM MOUNTING SUPPRESSION DEVICE MAGNETIC BLOWOUTS OPTIONAL

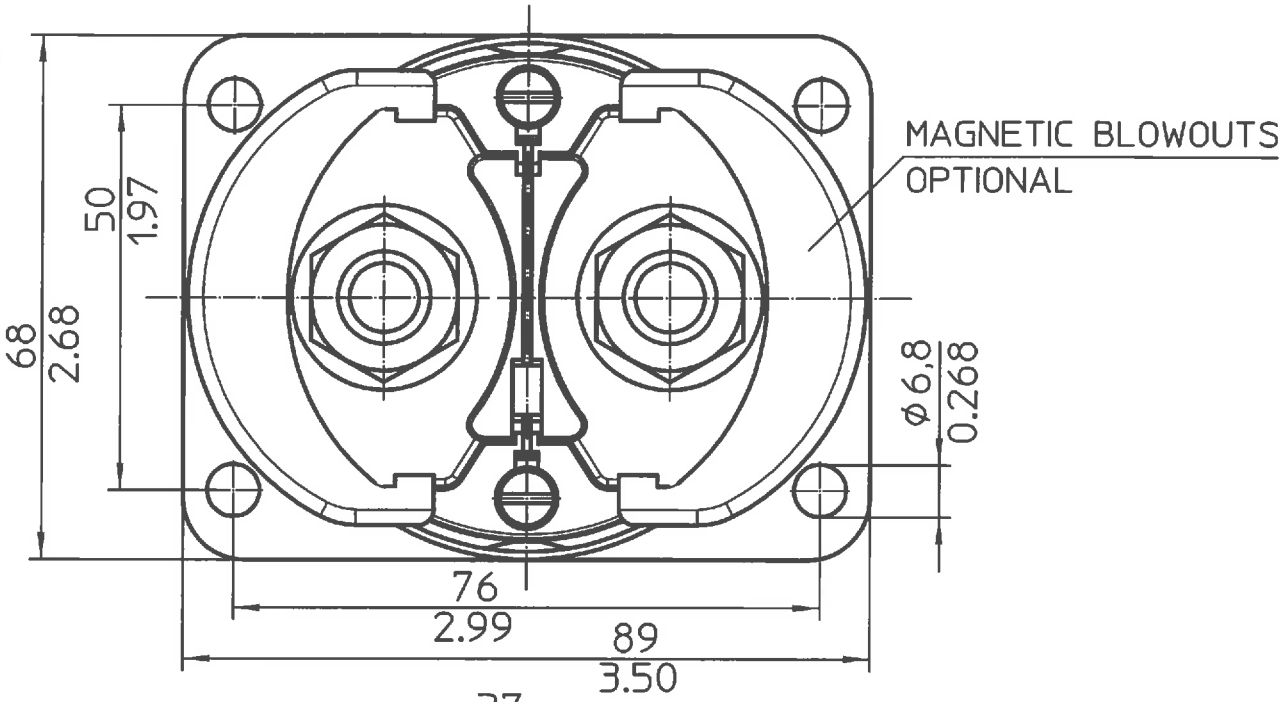

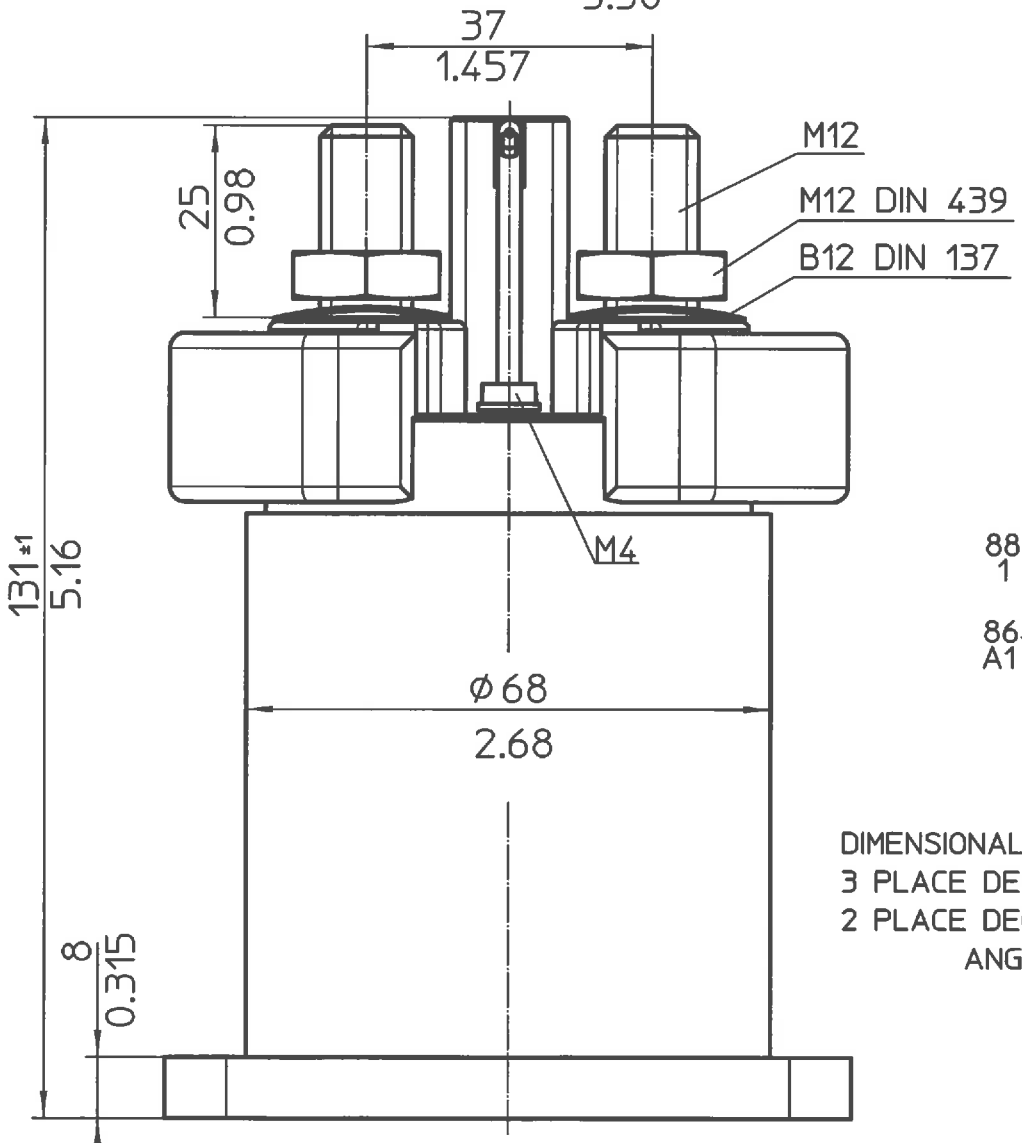

CIRCUIT

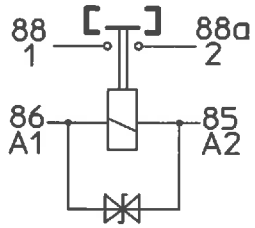

DIMENSIONAL TOLERANCES
3 PLACE DECIMAL ±0.010
2 PLACE DECIMAL ±0.03
ANGULAR ±0°30'

Third Angle Projection

	Date	Name	mm	Scale		Drawing No:
Drawn	06.05.2004	Hamar		1:1	Elektrotechnik - GmbH & Co KG	29-513-1...
Check	02.04.2014	Kaise	General Tolerances DIN ISO 2768 cL		D - 72218 Wildberg	NSN.:

EC No.
21893

500AMP. POWER RELAY

ENVIRONMENTALLY SEALED BOTTOM MOUNTING SUPRESSION DEVICE MAGNETIC BLOWOUTS OPTIONAL

TECHNICAL DATA

ENVIRONMENTAL CHARACTERISTICS

TEMPERATURE RANGE.....-40°C TO +85°C (-40°C F TO +185°F)
MAX. ALTITUDE RATING.....50 000 FT
SEAL.....IP67(6FEET/0,2BAR-1MIN.)I.A.W.IEC 529
IP6K9K (STEAM PRESSURE) DIN 40050 PART 9 AND I.A.W.IEC 529
SHOCK G-LEVEL.....6 G/ 11 MSEC
VIBRATION.....4 G/ 50-2000 Hz

ELECTRICAL CHARACTERISTICS

MIN.INSULATION RESISTANCE; INITIAL.....100 MEGOHMS
AFTER LIFE OR ENVIRONMENTAL.....50 MEGOHMS
DIELECTRIC WITHSTANDING VOLTAGE SEA-LEVEL 1 MINUTE.....1 050 VOLTS
ALTITUDE 1 MINUTE.....500 VOLTS
MAX. CONTACT DROP INITIAL.....0.15 VOLTS
AFTER LIFE TEST.....0.175 VOLTS
OVERLOAD.....4000 AMP FOR 1 SEC,1800 AMP FOR 20 SEC
DUTY RATING.....500 AMP CONTINUOUS

RATED CONTACT LOAD (28 VDC)	UP TO 48 VDC	UP TO 80 VDC	
RESISTIVE LOAD	500 AMP	300 AMP	100 000 CYCLES
INDUCTIVE LOAD	125 AMP	75 AMP	20 000 CYCLES
MOTOR LOAD	500 AMP	300 AMP	100 000 CYCLES
ENDURANCE			1 000 000 CYCLES

OPERATING CHARACTERISTICS

COIL DATA	12 VDC COIL	28 VDC COIL	48 VDC COIL	80 VDC COIL
VOLTAGE RANGE	9-16 VDC	18-32 VDC	36-54 VDC	60-90 VDC
NOMINAL VOLTAGE	12 VDC	28 VDC	48 VDC	80 VDC
PICK UP VOLTAGE MAX.*	9 VDC	18 VDC	36 VDC	60 VDC
DROP OUT VOLTAGE MAX.*	≤2 VDC	≤4 VDC	≤6 VDC	≤ 8 VDC
COIL RESISTANCE (±10%)	9 OHMS	36 OHMS	140 OHMS	350 OHMS
COIL CURRENT APPROX	1.33 AMP	0.78 AMP	0.34 AMP	0.23 AMP
COIL POWER APPROX	22 WATT	22 WATT	17 WATT	19 WATT

*FULL TEMP. RANGE

TIME-MILLISECONDS-MAX.

OPERATE.....60
BOUNCE.....5
RELEASE.....30

WHEIGT.....1.60 KG = 3.53 POUND MAX.

WIRE SECTION(AT NOMINAL LOAD).....MIN.240mm²/0.372 sq.in./MCM 500

MOUNTING POSITION.....OPTIONAL

ORDERING KEY

29.513.1X [ ]

SUFFIX B FOR MAGNETIC BLOWOUTS
NECESSARY>40 VDC CONTACT VOLTAGE

COIL	
1	12 VDC
2	28 VDC
4	48 VDC
8	80 VDC

	Date	Name	mm	Scale 1:1	Elektrotechnik - GmbH & Co KG D - 72218 Wildberg	Drawing No: 29-513-1...
Drawn	07.05.2004	Hamar	General Tolerances DIN ISO 2768 cL			
Check	02.04.2014	Kaise				NSN.: