Single phase, primary switched mode power supply, Economy

PVSE 230/48-10

Advantages

- Stabilised and adjustable output voltage
- Up to 200 % real power boost for 4 seconds
- Top boost to trip conventional circuit breakers
- DC OK signalling
- Stand-by-input
- Parallel connection option
- Service-friendly spring-loaded connector system
- Optional with active inrush current limiter

Applications

Primary switched mode power supply with massive power reserves focussing on the key task of power supply.

Simplified diagram

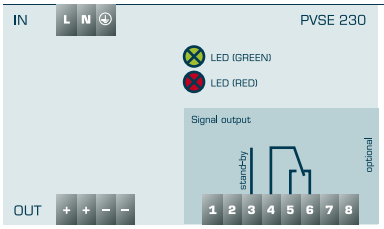

Standards

Primary switched mode power supply
to UL 60950, UL 508

Safety:
EN 61558-2-16, EN 60950-1

EMC:
EN 61204-3

Approvals

UL/CSA 60950 recognised, UL508 listed

BLOCK Transformatoren-Elektronik GmbH • Phone +49 4231 678-0 • info@block.eu

BLOCK
block.eu

Single phase, primary switched mode power supply, Economy
PVSE 230/48-10

Electrical data

Type	PVSE 230/48-10
Input	
Input rated voltage	110 - 240 Vac
Input rated current (rated load)	5.7 / 2.3 Aac (110 / 230 Vac)
Input voltage range	85 - 264 Vac (120 - 373 Vdc)
Rated frequency range	44 Hz - 66 Hz / 0 Hz
Starting current limiter	<8 A, active
Input fuse internal	10 A (slow-blow)
Recommended back-up fuse (circuit breaker)	10 A, 16 A, characteristics B, C
Harmonic correction	active
Mains buffering	20 / 25 ms (110 / 230 Vac)
Transient surge voltage protection	Varistor
Output	
Output rated voltage	48 Vdc ±1 %
Output voltage range	33 - 52 Vdc
Resistance to reverse feed max.	63 Vdc
Output rated current	10.00 A
Parallel connection	Yes
Power Boost	15 A / 4 s (12.5 A / 8 s)
Overload behaviour	Constant current
max. Power loss idling/nominal load	4.8 / 50.2 W
Serial operation	Yes
Efficiency	typ. 91 %
Ripple factor	typ. 70 mVss
Top Boost	40 A / 25 ms
Signaling	
Stand-by-input	Yes
Power Good (DC OK)	LED green, LED red
Potential free signal contact	Yes
Standards	
Classification	Primary switched mode power supply
Approvals	
Approvals	cURus, cULus
Environment	
Storage temperature	-25° C to +85° C
Derating	-3 %/K > +50° C, -1.5 %/Vac < 110 Vac
Ambient temperature	-10° C to +70° C
Safety and protection	
Safety class	I, with PE connection
Protection index	IP 20
Accessory	
Connector for signalling	PV-CON (optional)
Side DIN Rail mounting	PV-TS35M (optional)
Direct screw fastening plate for lateral mounting	PV-WB2 (optional)
Order numbers	
Order Number	**PVSE 230/48-10**

Mechanical data

Type	PVSE 230/48-10
Terminal and mounting	
Connections input, (spring clamp terminal, pluggable)	max. 2.5 mm²
Connections output, (spring clamp terminal, pluggable)	max. 10 mm²
Connections signalling, (spring clamp terminal, pluggable)	max. 0.5 mm²
Mounting position	vertical
Fixing method	DIN Rail system TH 35
Measures and weights	
Weight	2.30 kg

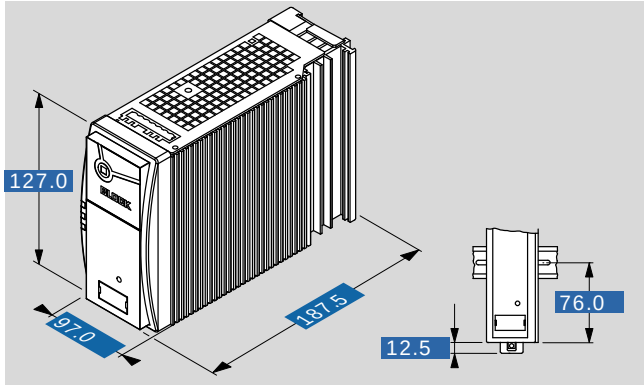

Subjects to change.