© 2022TE Connectivity. All Rights Reserved.

REVISIONS					
P	LTR	DESCRIPTION	DATE	DWN	APVD
	1	RELEASED PER ECN-22-190373	10JAN2023	CYH	WTN
	A	RELEASED PER ECN-23-195764	30JAN2023	CYH	WTN

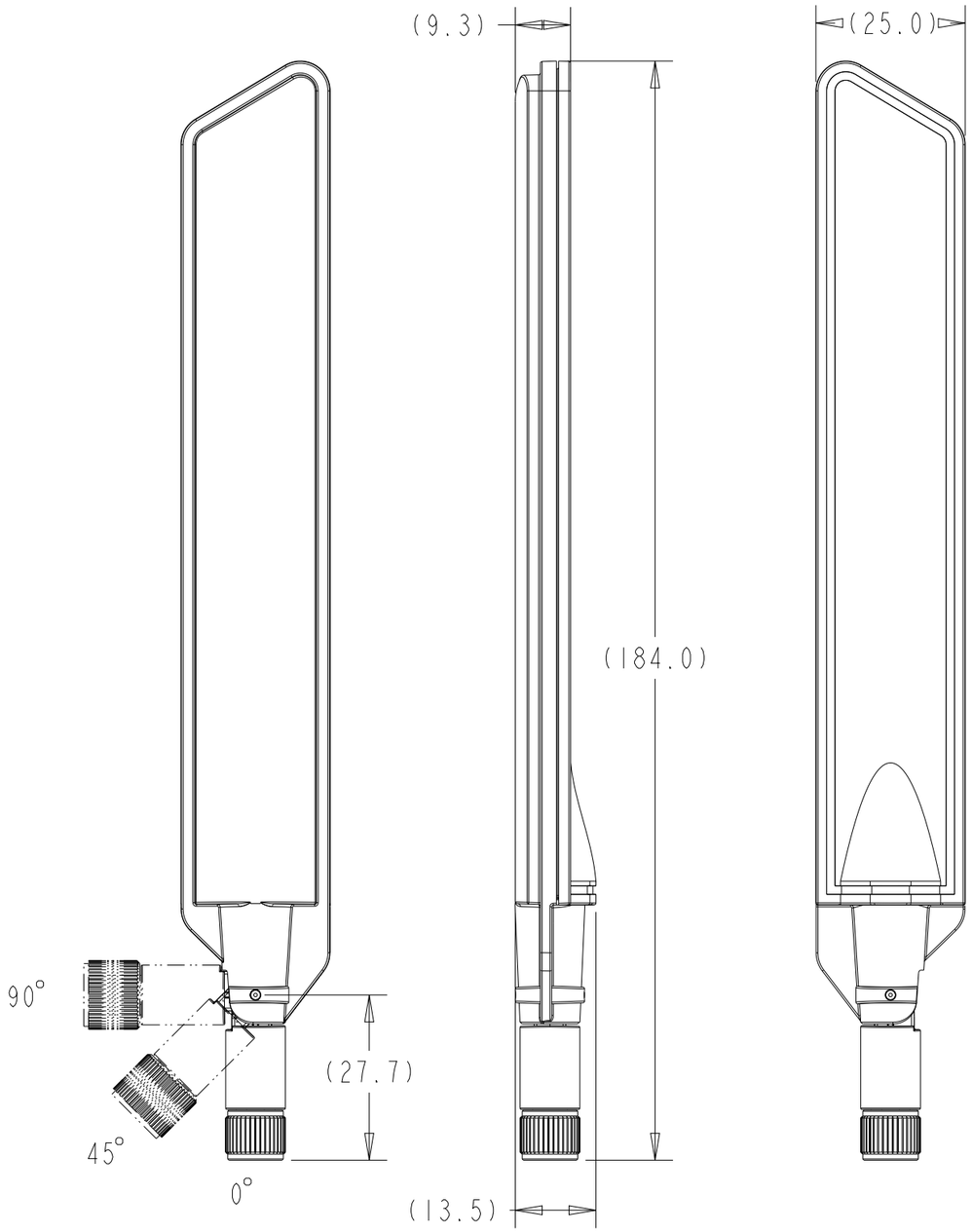

Antenna Bend Position

Parameter	Performance						
TE Part Number	DBA6171C2-BSMAM						
Frequency Bands, MHz	617-698	698-960	1427-1606	1710-2200	2300-2700	3300-4200	5150-6000
Peak Gain, dBi (Average)	-0.3	0.2	0.6	0.8	1.4	2.8	3.0
Peak Gain, dBi	0.0	1.0	1.0	2.1	2.1	3.9	4.4
Total Efficiency (Average, %)	51%	49%	59%	53%	74%	56%	65%
Total Efficiency (Average, dB)	-3.0	-3.1	-2.3	-2.7	-1.3	-2.5	-1.9
Polarization	Linear, Vertical						
VSWR (Average)	<1.9	<1.7	<1.7	<2.2	<1.7	<1.9	<1.8
VSWR (Max)	<2.5	<2.0	<3.5	<2.5	<2.3	<2.3	<2.3
Azimuth Beam Width	360°, Omnidirectional						
Nominal Impedance	50 Ohm						
Input Power, Max	5 Watts						
Weight	30g						
Radome	Polycarbonate, UV						
Color	Black						
Operating Temperature	-40°C ~ +85°C						
Storage Temperature	-40°C ~ +85°C						
Wind Rating (Survival)	N/A						
Ingression Protection	N/A						
RoHS Compliance	Yes						
RF Connector	SMA Male						

*Note: Measured at 0° bend position

THIS DRAWING IS A CONTROLLED DOCUMENT.

DIMENSIONS: mm

TOLERANCES UNLESS OTHERWISE SPECIFIED:
0 PLC ±0.5
1 PLC ±0.25
2 PLC ±0.13
3 PLC ±
4 PLC ±
ANGLES ±0.5

MATERIAL - N/A

FINISH - N/A

DWN CY HANG 30-Jan-23
CHK KM LIM 15-Dec-22
APVD WT NG 15-Dec-22
PRODUCT SPEC -
APPLICATION SPEC -
WEIGHT -

TE Connectivity

NAME DIPOLE, SMAM, SWIVEL 617-7125MHz, INDOOR
-

SIZE	CAGE CODE	DRAWING NO	RESTRICTED TO
A3	00779	C-DBA6171C2-BSMAM	-

CUSTOMER DRAWING | SCALE 1:1 | SHEET 1 OF 1 | REV A

1470-19 (3/13)