| DRW NO. | SH | REV |
|---|---|---|
| C-972-401J-500 | 1 | G |

| ZONE | REV | ECN NUMBER | DESCRIPTION | BY | DATE | APPROVED |
|---|---|---|---|---|---|---|
| | E | BWAG-18101704 | UPDATED NOTE 1.<br>ADDED NOTE 11 & 12.<br>REVISED BASE THICKNESS TOLERANCE 0.10 WAS 0.13.<br>ADDED SURFACE GROUND PLANE. | HCL-UD | 10/29/2018 | B.WANG |
| SHT1, C3 | F | HHUG-20010801 | ADDED PLATING OPTION "P" TO P/N TREE | HCL-SG | 01/23/2020 | H.HUANG |
| SHT9 | G | HHUG-20090906 | ADDED SE MODULE PCB DETAILS. | HCL-SH | 10/06/2020 | H.HUANG |

NOTE: ONLY THREE MOST RECENT RELEASED REVISIONS DISPLAYED.

# 972 - 4 X 1 J - X 0 X

XCede HD2 BACKPLANE MODULE MALE STANDARD LOAD

4 PAIR

4-POSITION

| LETTER | PLATING |
|---|---|
| D | NI SULFAMATE, STANDARD GOLD, LEADFREE |
| E | NI SULFAMATE, HIGH GOLD, LEADFREE |
| H | NANO NI, STANDARD GOLD, LEADFREE |
| J | NANO NI, HIGH GOLD, LEADFREE |
| P | Pd-NI, STANDARD GOLD, LEADFREE |

| NUMBER | SIGNAL & GROUND WIPE LENGTH, COMPLIANT PIN SIZE |
|---|---|
| G | 2 mm WIPE SIGNAL, 3 mm WIPE GND, Ø.0157" DRILL |
| J | 2 mm WIPE SIGNAL, 2 mm WIPE GND, Ø.0157" DRILL |

| NUMBER | WALL THICKNESS / SHIELD OPTION |
|---|---|
| 1 | THICK WALL, W/ EXTRA GROUND |

| LETTER | | | | | | | | | |
|---|---|---|---|---|---|---|---|---|---|
| LEFT POLARIZING GUIDANCE (SEE SHEET 6) | J (NO KEY) | A | B | C | D | E | F | G | H |
| RIGHT POLARIZING GUIDANCE (SEE SHEET 7) | Y (NO KEY) | P | Q | R | S | T | U | V | W |
| OPEN (SEE SHEET 2) | O (ZERO) | | | | | | | | |
| LEFT WALL (SEE SHEET 3) | L | | | | | | | | |
| RIGHT WALL (SEE SHEET 4) | M | | | | | | | | |
| TWO WALL (SEE SHEET 5) | 1 | | | | | | | | |

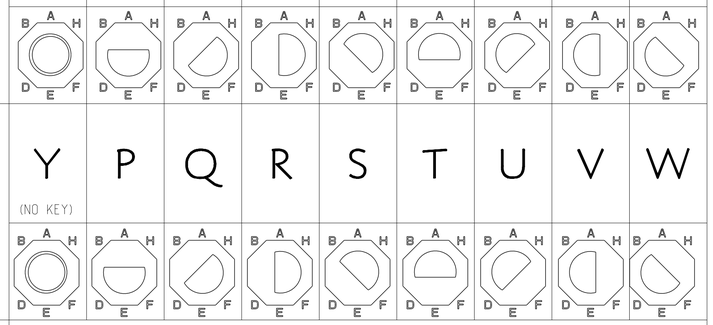


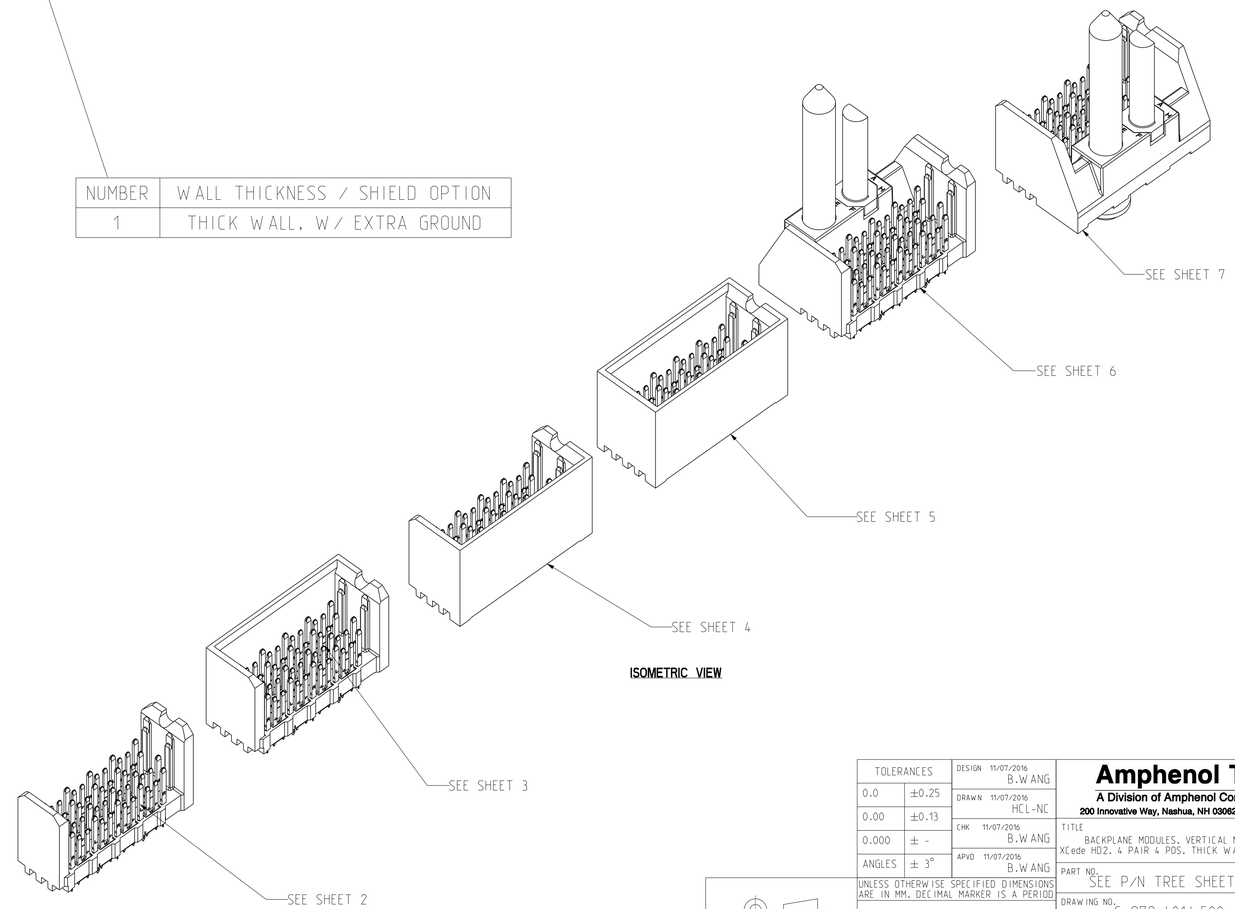


ISOMETRIC VIEW

NOTES:
1. REFER TO TB-2343 FOR XCede HD2 PRODUCT SPECIFICATIONS.
2. NOTCH DESIGNATES "ROW A" SIDE OF SHROUD. NOTCH FEATURE ON OPPOSITE SIDE FROM PART MARKING.
3. SEE TB-2325 FOR PART MARKING REQUIREMENTS.
4. PLATING THICKNESS OF SIGNAL CONTACT AND GROUND CONTACT IS DETERMINED BY PLATING CODE.
5. REPAIR PROCEDURE FOR MODULE. SEE TB-2245.
6. SEE TB-2237 (XCede HD2 ROUTING GUIDELINES) FOR BOARD SPECIFIC DETAILS ON ROUTING, PLATING THICKNESS, SECONDARY DIAMETERS, PAD, ANTIPAD LOCATIONS, BACK DRILLING AND SHADOW VIAS.
7. SEE DOC C-190-0009-000 FOR TOOLING KEEPOUT ZONES.
8. BACKPLANE DATUM REFERENCE.
9. OPTIONAL HOLE/MOUNTING SCREW LOCATION FOR GROUNDED PIN OR ADDITIONAL GUIDE PIN SUPPORT SEE DRAWING C-914-4010-000 FOR OPTIONAL HOLE DETAILS. ONLY APPLIES FOR MACHINED GUIDE PIN APPLICATIONS.
10. SHADOW VIAS (GND VIA'S) DO NOT RECEIVE COMPLIANT PINS. THEY ARE ADDED FOR IMPROVED SIGNAL INTEGRITY PERFORMANCE AND CAN CHANGE IN SIZE AND LOCATION BASED UPON THE SPECIFIC DESIGN DETAILS.
11. SURFACE GROUND PLANE EQUAL TO COMPONENT OUTLINE REQUIRED. SURFACE GROUND PLANE TO BE FREE FROM SOLDEMASK
12. ALL PLASTIC MATERIAL IS UL 94V-0 FLAMMABLE

| TOLERANCES | |
|---|---|
| 0.0 | ±0.25 |
| 0.00 | ±0.13 |
| 0.000 | ± - |
| ANGLES | ± 3° |

UNLESS OTHERWISE SPECIFIED DIMENSIONS ARE IN MM. DECIMAL MARKER IS A PERIOD

INTERPRET PER ASME Y14.5M

CODE IDENT 31413

CUSTOMER USE DRAWING

| | | |
|---|---|---|
| DESIGN 11/07/2016 | B.WANG | |
| DRAWN 11/07/2016 | HCL-NC | |
| CHK 11/07/2016 | B.WANG | |
| APVD 11/07/2016 | B.WANG | |

**Amphenol TCS**
A Division of Amphenol Corporation
200 Innovative Way, Nashua, NH 03062 603.879.3000

TITLE
BACKPLANE MODULES, VERTICAL MALE HEADER
XCede HD2, 4 PAIR 4 POS, THICK WALL W/EXTRA GND

| PART NO. | REV |
|---|---|
| SEE P/N TREE SHEET 1 | N/A |
| DRAWING NO. C-972-401J-500 | REV G |

ASSEM C972-401J-500_XG-HD2 0.2
DRAWING C972-401J-500_XG-HD2 0.11

SIZE D | SCALE 1/1 | SHEET 1 OF 9

| DRW NO. | SH | REV |
|---|---|---|
| C-972-401J-500 | 2 | G |

| ZONE | REV | ECN NUMBER | DESCRIPTION | BY | DATE | APPROVED |
|---|---|---|---|---|---|---|
| | | | SEE SHEET 1 | | | |

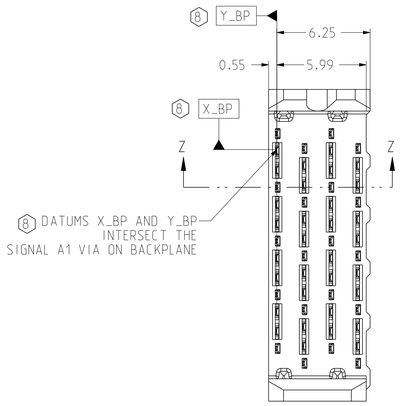


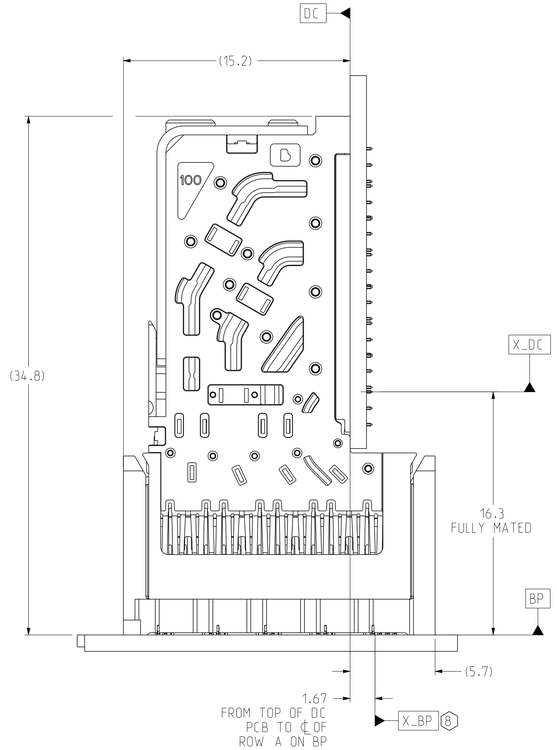


**CONNECTOR REFERENCE**
SCALE 5/1

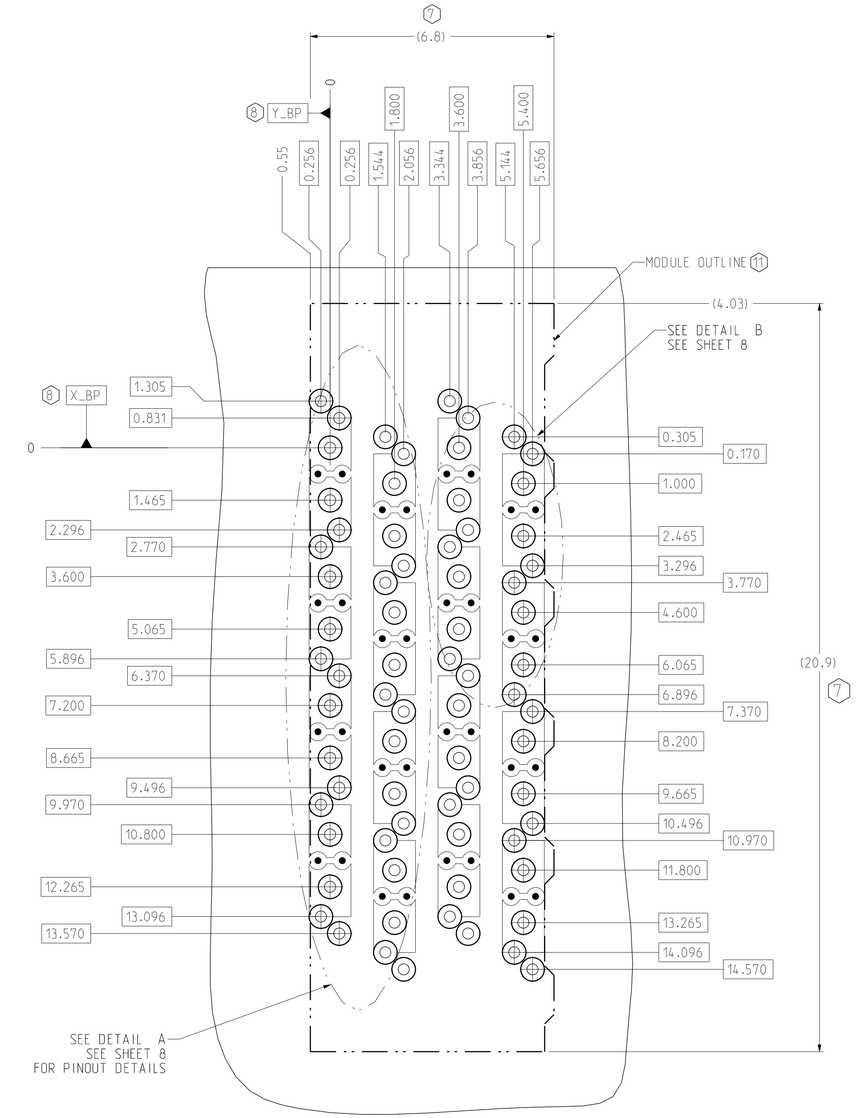


**BP HOLE PATTERN**
**COMPONENT SIDE**
SCALE 12/1

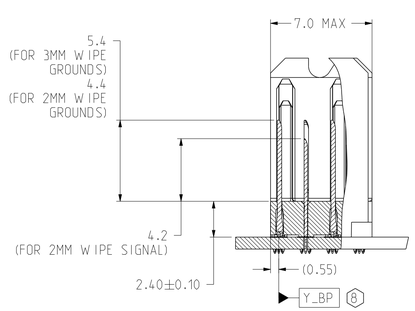


**SECTION Z-Z**

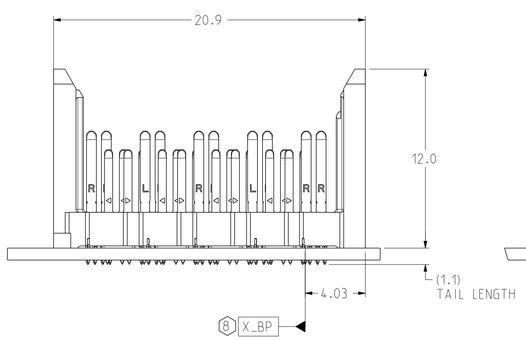


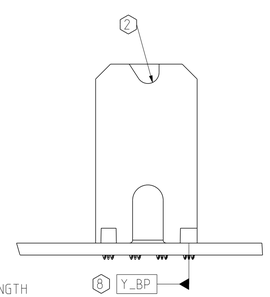


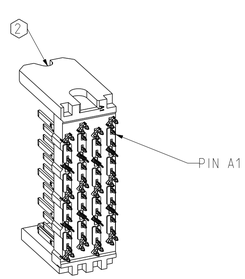


**ISOMETRIC VIEW**
SCALE 3/1

# OPEN BACKPLANE MODULE DIMENSION

| TOLERANCES | |
|---|---|
| 0.0 | ±0.25 |
| 0.00 | ±0.13 |
| 0.000 | ± - |
| ANGLES | ± 3° |

UNLESS OTHERWISE SPECIFIED DIMENSIONS ARE IN MM. DECIMAL MARKER IS A PERIOD

INTERPRET PER ASME Y14.5M

CODE IDENT 31413

CUSTOMER USE DRAWING

DESIGN 11/07/2016 B.WANG
DRAWN 11/07/2016 HCL-NC
CHK 11/07/2016 B.WANG
APVD 11/07/2016 B.WANG

**Amphenol TCS**
A Division of Amphenol Corporation
200 Innovative Way, Nashua, NH 03062 603.879.3000

TITLE: BACKPLANE MODULES, VERTICAL MALE HEADER XCede HD2, 4 PAIR 4 POS. THICK WALL W/EXTRA GND

PART NO. SEE P/N TREE SHEET 1 — REV N/A

DRAWING NO. C-972-401J-500 — REV G

ASSEM C972-401J-500_XG-HD2 0.2
DRAWING C972-401J-500_XG-HD2 0.11

SIZE D | SCALE 1/1 | SHEET 2 OF 9

| DRW NO. | SH | REV |
|---|---|---|
| C-972-401J-500 | 3 | G |

| ZONE | REV | ECN NUMBER | DESCRIPTION | BY | DATE | APPROVED |
|---|---|---|---|---|---|---|
| | | | SEE SHEET 1 | | | |

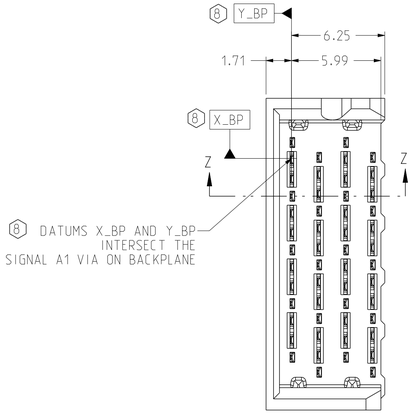


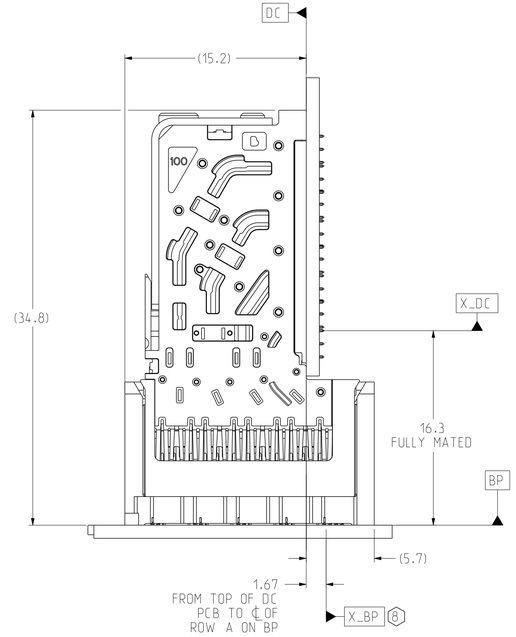


**CONNECTOR REFERENCE**
SCALE 4/1

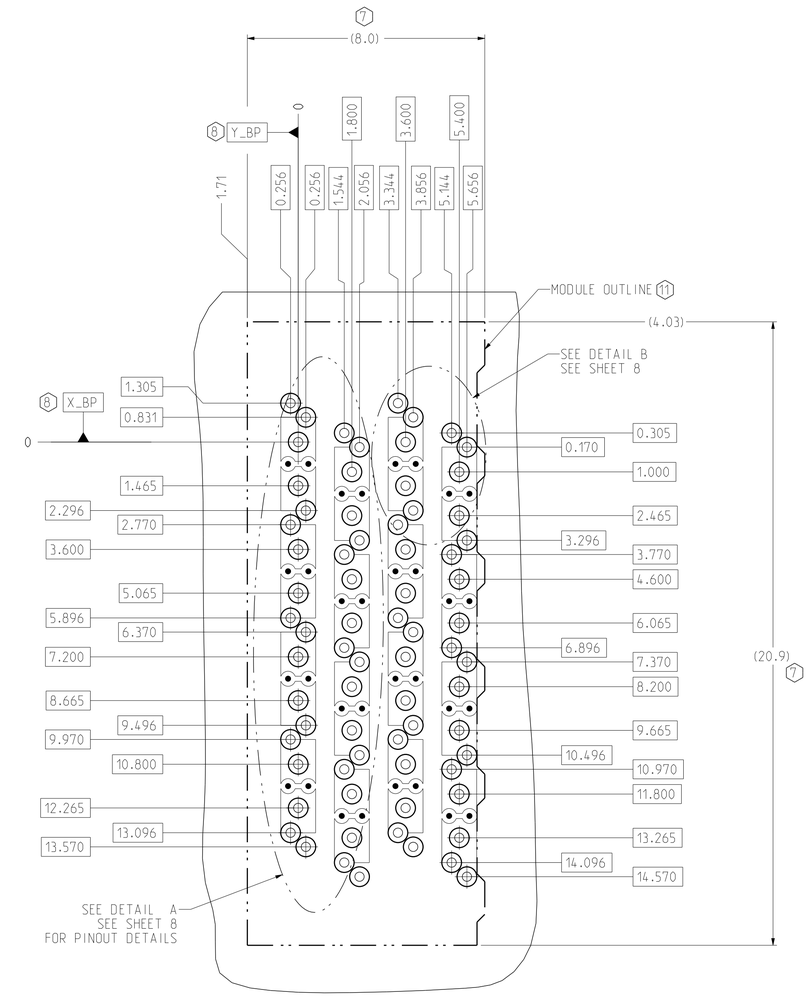


**BP HOLE PATTERN**
**COMPONENT SIDE**
SCALE 10/1

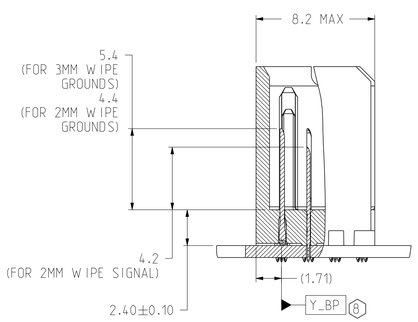


**SECTION Z-Z**

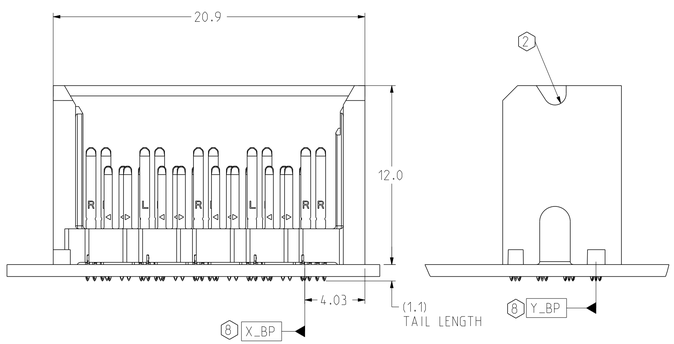


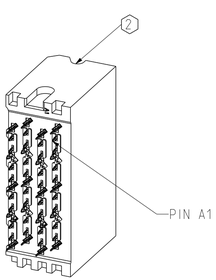


**ISOMETRIC VIEW**
SCALE 3/1

# LEFT WALL BACKPLANE MODULE DIMENSION

| TOLERANCES | |
|---|---|
| 0.0 | ±0.25 |
| 0.00 | ±0.13 |
| 0.000 | ± - |
| ANGLES | ± 3° |

UNLESS OTHERWISE SPECIFIED DIMENSIONS ARE IN MM. DECIMAL MARKER IS A PERIOD

INTERPRET PER ASME Y14.5M

CODE IDENT 31413

CUSTOMER USE DRAWING

DESIGN 11/07/2016 B.WANG
DRAWN 11/07/2016 HCL-NC
CHK 11/07/2016 B.WANG
APVD 11/07/2016 B.WANG

**Amphenol TCS**
A Division of Amphenol Corporation
200 Innovative Way, Nashua, NH 03062 603.879.3000

TITLE BACKPLANE MODULES, VERTICAL MALE HEADER XCede HD2, 4 PAIR 4 POS, THICK WALL W/EXTRA GND

PART NO. SEE P/N TREE SHEET 1 REV N/A

DRAWING NO. C-972-401J-500 REV G

ASSEM C972-401J-500_XG-HD2 0.2
DRAWING C972-401J-500_XG-HD2 0.11

SIZE D SCALE 1/1 SHEET 3 OF 9

| DRW NO. | SH | REV |
|---|---|---|
| C-972-401J-500 | 4 | G |

| ZONE | REV | ECN NUMBER | DESCRIPTION | BY | DATE | APPROVED |
|---|---|---|---|---|---|---|
| | | | SEE SHEET 1 | | | |

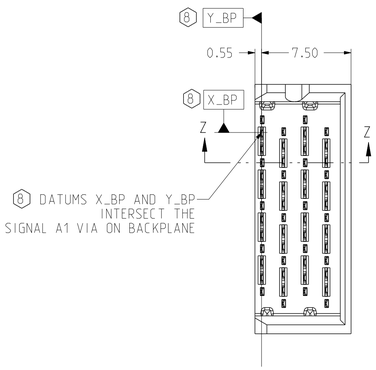


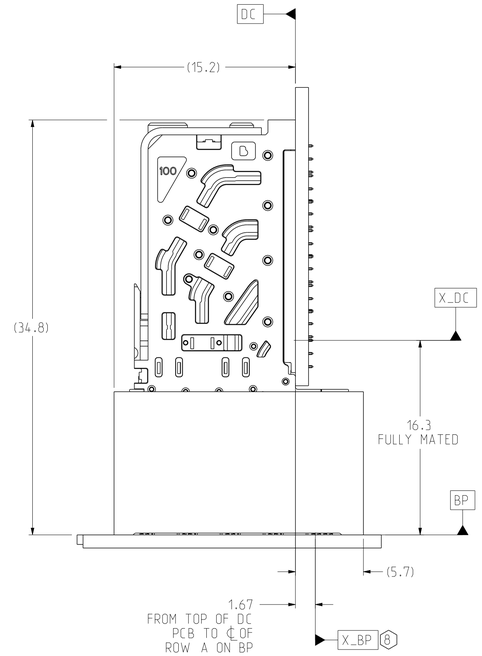


**CONNECTOR REFERENCE**
SCALE 4/1

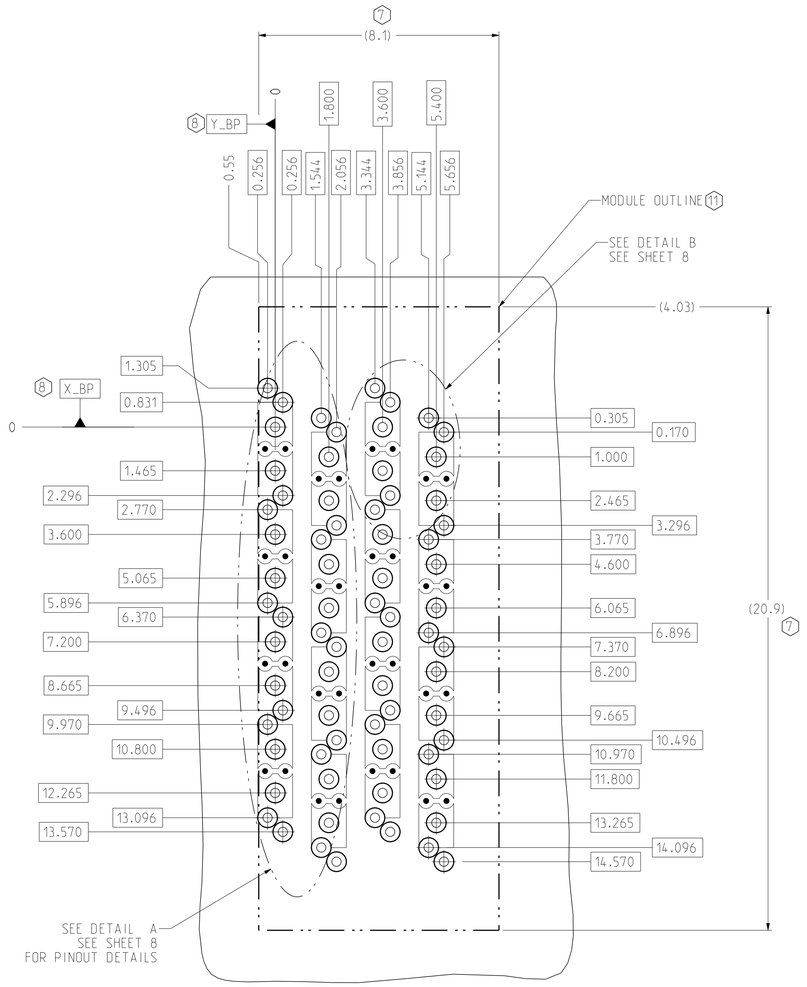


**BP HOLE PATTERN**
**COMPONENT SIDE**
SCALE 10/1

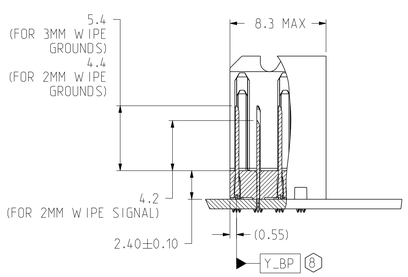


**SECTION Z-Z**

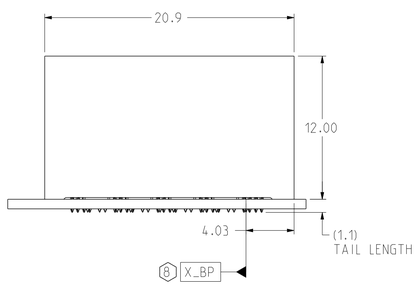


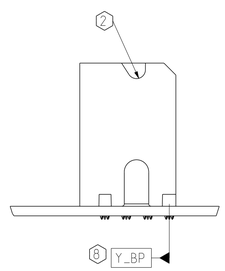


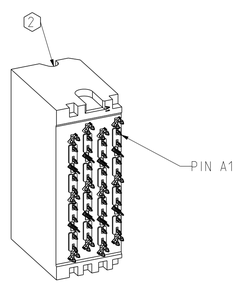


**ISOMETRIC VIEW**
SCALE 3/1

# RIGHT WALL BACKPLANE MODULE DIMENSION

| TOLERANCES | |
|---|---|
| 0.0 | ±0.25 |
| 0.00 | ±0.13 |
| 0.000 | ± - |
| ANGLES | ± 3° |

| | | |
|---|---|---|
| DESIGN | 11/07/2016 | B.WANG |
| DRAWN | 11/07/2016 | HCL-NC |
| CHK | 11/07/2016 | B.WANG |
| APVD | 11/07/2016 | B.WANG |

UNLESS OTHERWISE SPECIFIED DIMENSIONS ARE IN MM. DECIMAL MARKER IS A PERIOD

INTERPRET PER ASME Y14.5M

CODE IDENT 31413

CUSTOMER USE DRAWING

**Amphenol TCS**
A Division of Amphenol Corporation
200 Innovative Way, Nashua, NH 03062 603.879.3000

TITLE
BACKPLANE MODULES, VERTICAL MALE HEADER XCede HD2, 4 PAIR 4 POS, THICK WALL W/EXTRA GND

| PART NO. | REV |
|---|---|
| SEE P/N TREE SHEET 1 | N/A |
| DRAWING NO. C-972-401J-500 | REV G |
| ASSEM C972-401J-500_XG-HD2 | 0.2 |
| DRAWING C972-401J-500_XG-HD2 | 0.11 |

SIZE D | SCALE 1/1 | SHEET 4 OF 9

| DRW NO. | SH | REV |
|---|---|---|
| C-972-401J-500 | 5 | G |

| ZONE | REV | ECN NUMBER | DESCRIPTION | BY | DATE | APPROVED |
|---|---|---|---|---|---|---|
| | | | SEE SHEET 1 | | | |

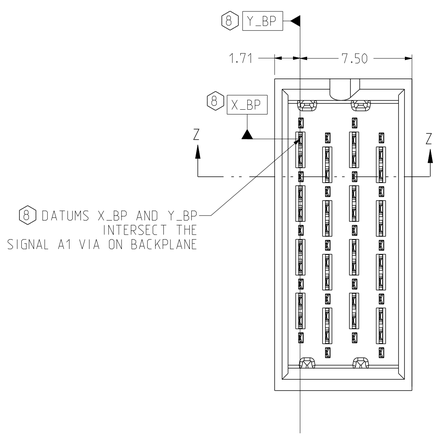


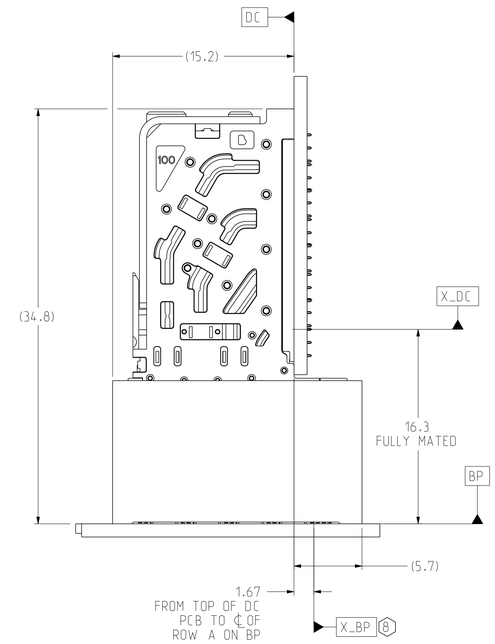


**CONNECTOR REFERENCE**
SCALE 4/1

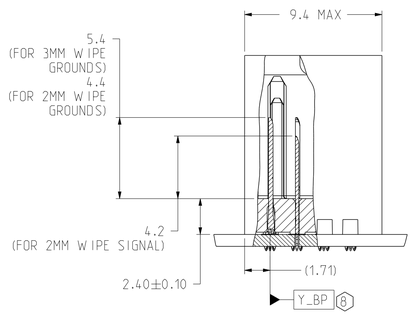


**SECTION Z-Z**

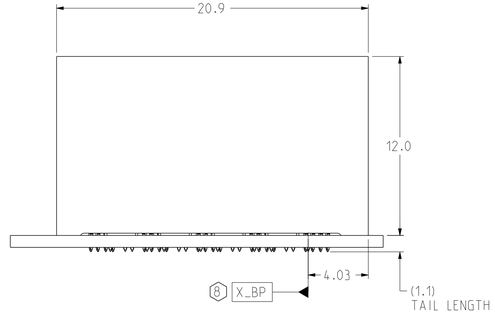


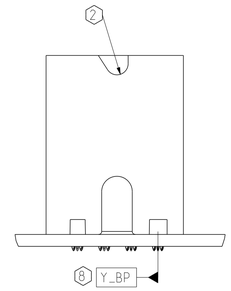


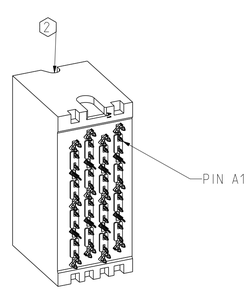


**ISOMETRIC VIEW**
SCALE 3/1

## TWO WALL BACKPLANE MODULE DIMENSION

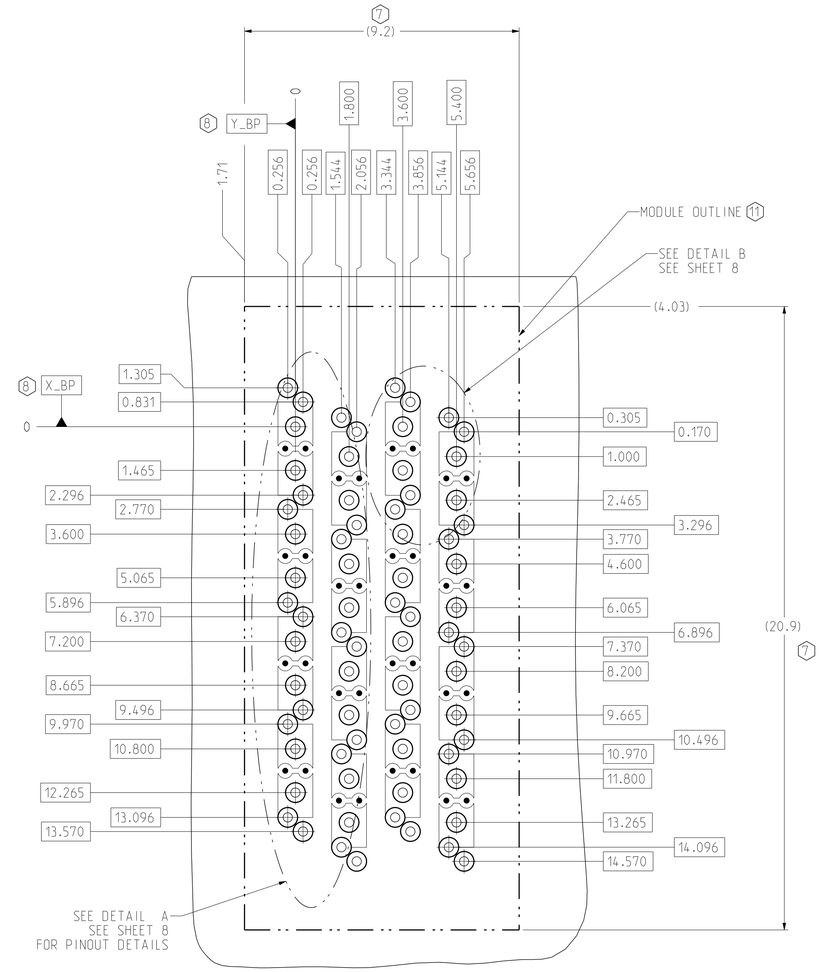


## TWO WALL BACKPLANE FOOTPRINT

**BP HOLE PATTERN**
**COMPONENT SIDE**
SCALE 10/1

| TOLERANCES | |
|---|---|
| 0.0 | ±0.25 |
| 0.00 | ±0.13 |
| 0.000 | ± - |
| ANGLES | ± 3° |

UNLESS OTHERWISE SPECIFIED DIMENSIONS ARE IN MM. DECIMAL MARKER IS A PERIOD

INTERPRET PER ASME Y14.5M

CODE IDENT 31413

CUSTOMER USE DRAWING

| | | |
|---|---|---|
| DESIGN 11/07/2016 | B.WANG | |
| DRAWN 11/07/2016 | HCL-NC | |
| CHK 11/07/2016 | B.WANG | |
| APVD 11/07/2016 | B.WANG | |

**Amphenol TCS**
A Division of Amphenol Corporation
200 Innovative Way, Nashua, NH 03062 603.879.3000

TITLE
BACKPLANE MODULES, VERTICAL MALE HEADER XCede HD2, 4 PAIR 4 POS, THICK WALL W/EXTRA GND

| | | |
|---|---|---|
| PART NO. | SEE P/N TREE SHEET 1 | REV N/A |
| DRAWING NO. | C-972-401J-500 | REV G |
| ASSEM C972-401J-500_XG-HD2 | | 0.2 |
| DRAWING C972-401J-500_XG-HD2 | | 0.11 |

SIZE D | SCALE 1/1 | SHEET 5 OF 9

| DRW NO. | SH | REV |
|---|---|---|
| C-972-401J-500 | 6 | G |

| ZONE | REV | ECN NUMBER | DESCRIPTION | BY | DATE | APPROVED |
|---|---|---|---|---|---|---|
| | | | SEE SHEET 1 | | | |

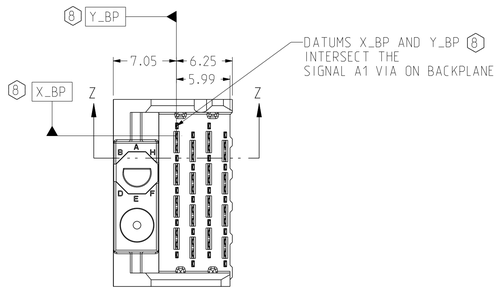


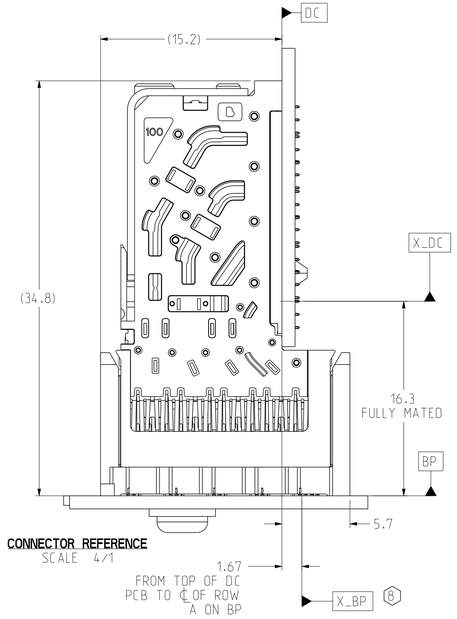


CONNECTOR REFERENCE
SCALE 4/1

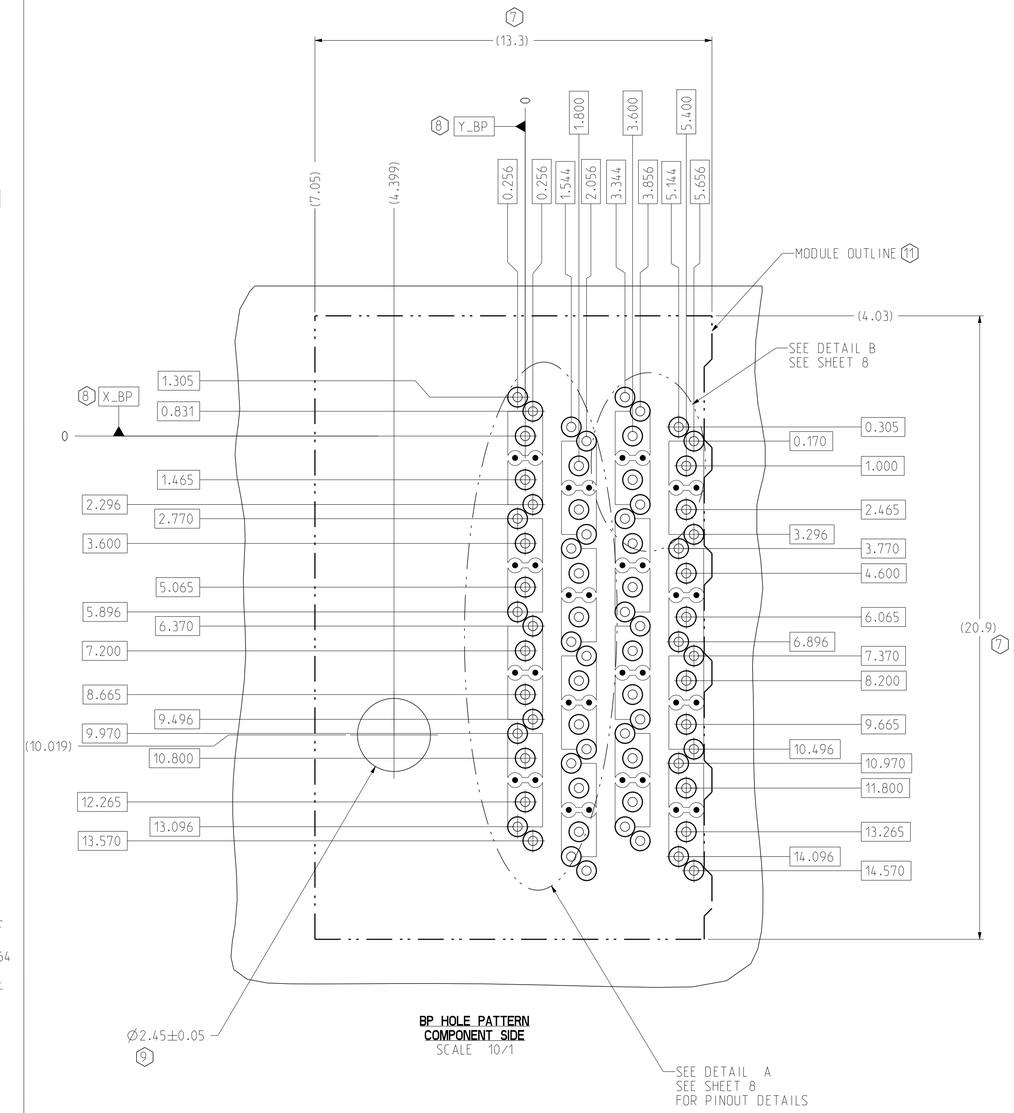


BP HOLE PATTERN
COMPONENT SIDE
SCALE 10/1

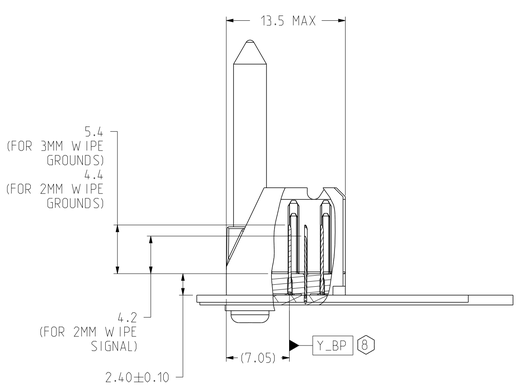


SECTION Z-Z

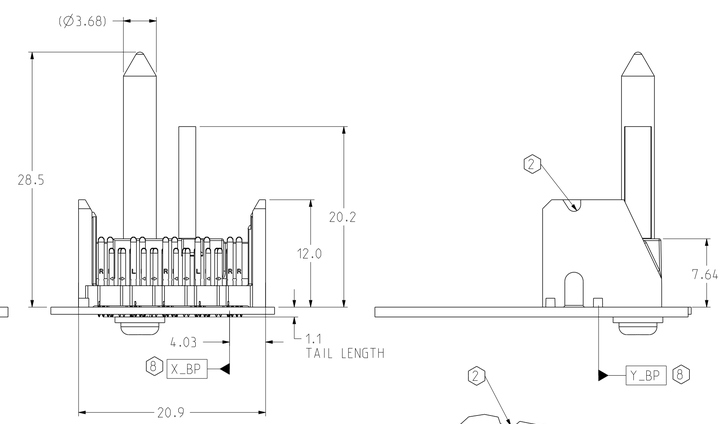


SCALE 3/1

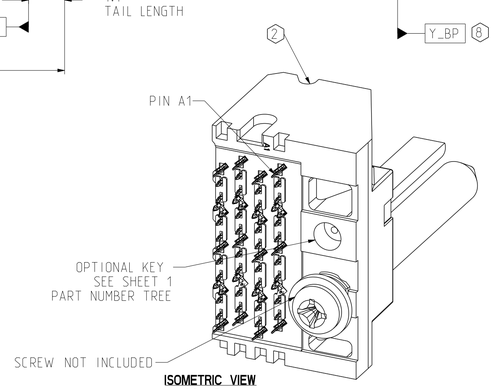


ISOMETRIC VIEW
SCALE 4/1

# LEFT POLARIZING/GUIDE BACKPLANE MODULE DIMENSION

| TOLERANCES | |
|---|---|
| 0.0 | ±0.25 |
| 0.00 | ±0.13 |
| 0.000 | ± - |
| ANGLES | ± 3° |

UNLESS OTHERWISE SPECIFIED DIMENSIONS ARE IN MM. DECIMAL MARKER IS A PERIOD

| | | |
|---|---|---|
| DESIGN | 11/07/2016 | B.WANG |
| DRAWN | 11/07/2016 | HCL-NC |
| CHK | 11/07/2016 | B.WANG |
| APVD | 11/07/2016 | B.WANG |

**Amphenol TCS**
A Division of Amphenol Corporation
200 Innovative Way, Nashua, NH 03062 603.879.3000

TITLE
BACKPLANE MODULES, VERTICAL MALE HEADER
XCede HD2, 4 PAIR 4 POS, THICK WALL W/EXTRA GND

| PART NO. | REV |
|---|---|
| SEE P/N TREE SHEET 1 | N/A |
| DRAWING NO. C-972-401J-500 | G |
| ASSEM C972-401J-500_XG-HD2 | 0.2 |
| DRAWING C972-401J-500_XG-HD2 | 0.11 |

INTERPRET PER ASME Y14.5M

CODE IDENT 31413

CUSTOMER USE DRAWING

SIZE D | SCALE 1/1 | SHEET 6 OF 9

| DRW NO. | SH | REV |
|---|---|---|
| C-972-401J-500 | 7 | G |

| ZONE | REV | ECN NUMBER | DESCRIPTION | BY | DATE | APPROVED |
|---|---|---|---|---|---|---|
| | | | SEE SHEET 1 | | | |

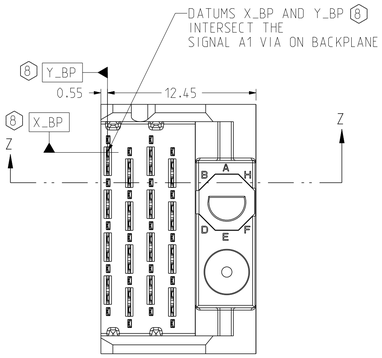


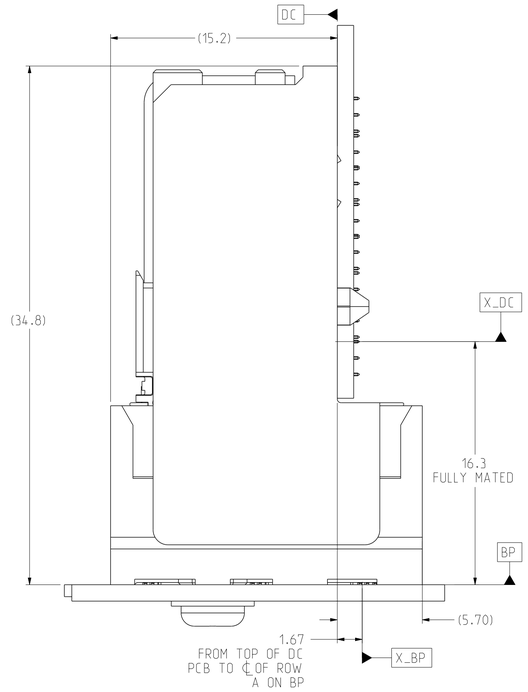


CONNECTOR REFERENCE
SCALE 5/1

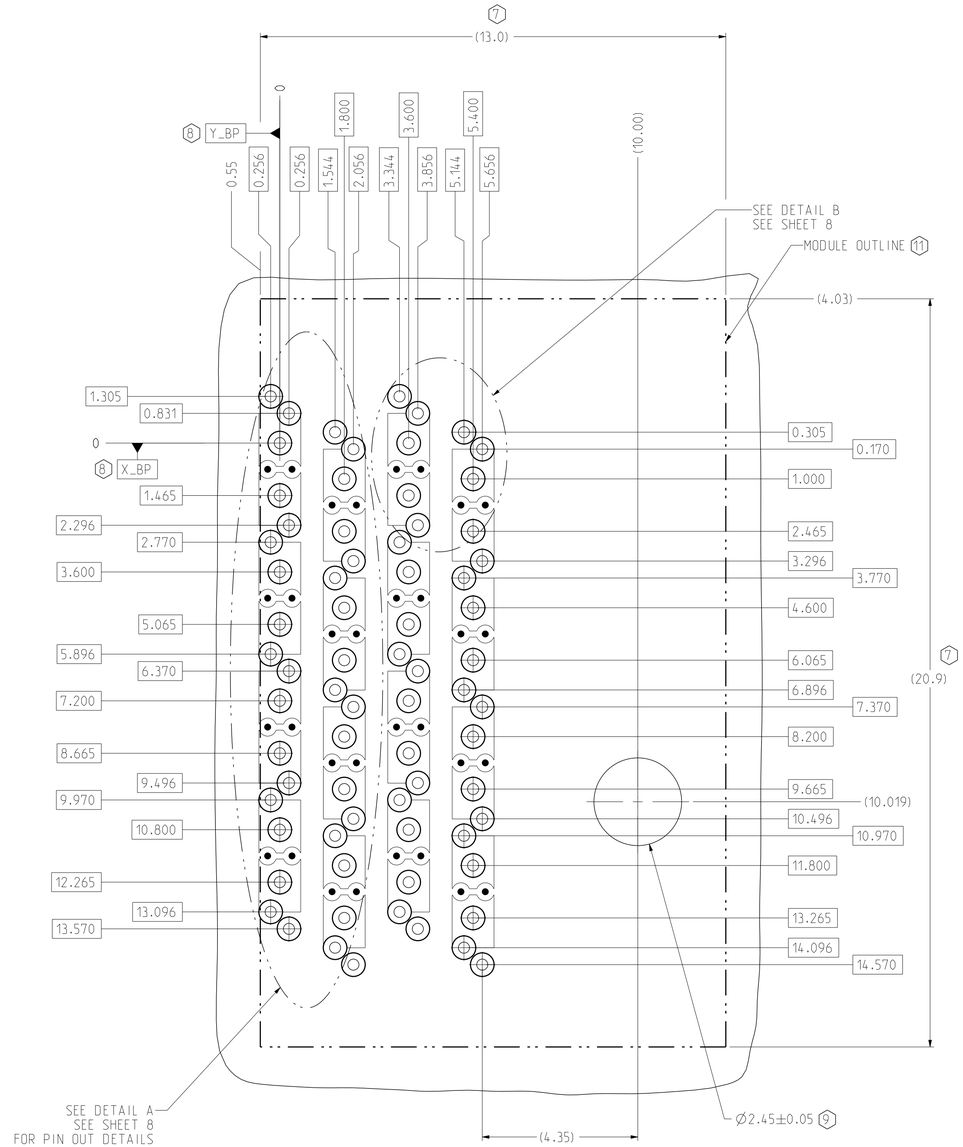


BP HOLE PATTERN
COMPONENT SIDE
SCALE 12/1

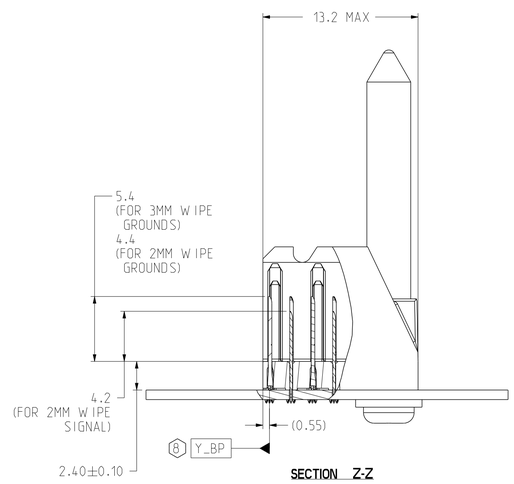


SECTION Z-Z

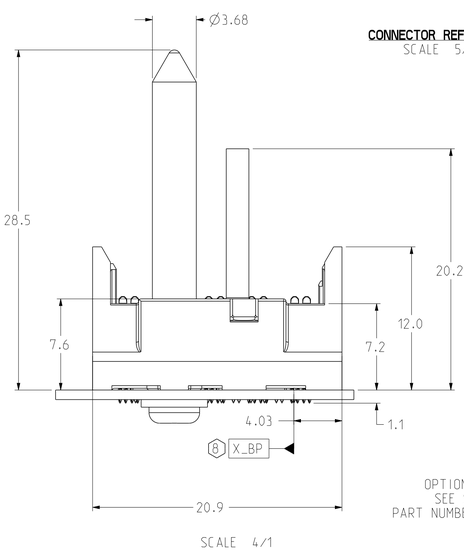


SCALE 4/1

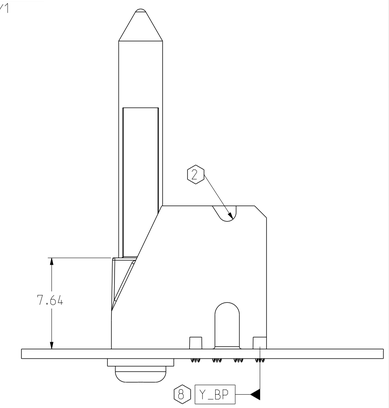


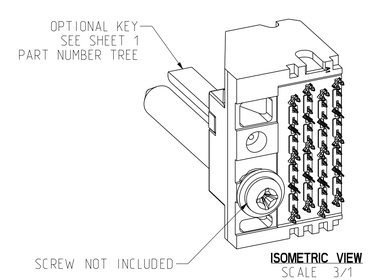


ISOMETRIC VIEW
SCALE 3/1

# RIGHT POLARIZING/GUIDE BACKPLANE MODULE DIMENSION

| TOLERANCES | |
|---|---|
| 0.0 | ±0.25 |
| 0.00 | ±0.13 |
| 0.000 | ± - |
| ANGLES | ± 3° |

UNLESS OTHERWISE SPECIFIED DIMENSIONS ARE IN MM. DECIMAL MARKER IS A PERIOD

INTERPRET PER ASME Y14.5M

CODE IDENT 31413

CUSTOMER USE DRAWING

DESIGN 11/07/2016 B.WANG
DRAWN 11/07/2016 HCL-NC
CHK 11/07/2016 B.WANG
APVD 11/07/2016 B.WANG

**Amphenol TCS**
A Division of Amphenol Corporation
200 Innovative Way, Nashua, NH 03062 603.879.3000

TITLE
BACKPLANE MODULES, VERTICAL MALE HEADER
XCede HD2, 4 PAIR 4 POS, THICK WALL W/EXTRA GND

| PART NO. | REV |
|---|---|
| SEE P/N TREE SHEET 1 | N/A |
| DRAWING NO. C-972-401J-500 | G |
| ASSEM C972-401J-500_XG-HD2 | 0.2 |
| DRAWING C972-401J-500_XG-HD2 | 0.11 |

SIZE D | SCALE 1/1 | SHEET 7 OF 9

| DRW NO. | SH | REV |
|---|---|---|
| C-972-401J-500 | 8 | G |

| ZONE | REV | ECN NUMBER | DESCRIPTION | BY | DATE | APPROVED |
|---|---|---|---|---|---|---|
| | | | SEE SHEET 1 | | | |

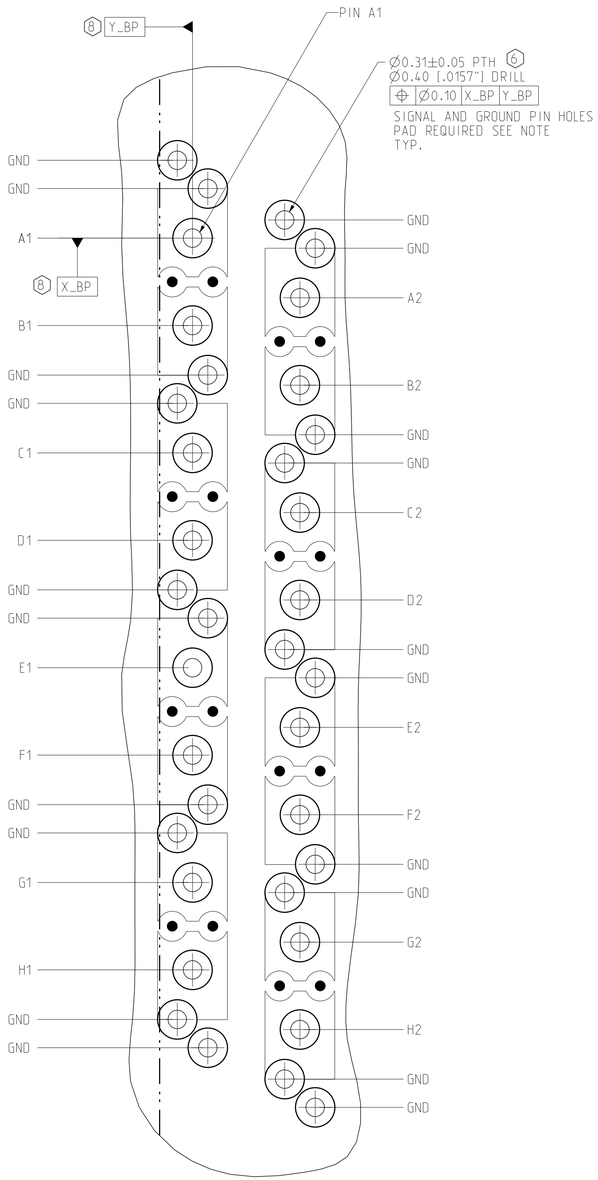


**DETAIL A**
**PINOUT DETAILS**
SCALE 20/1

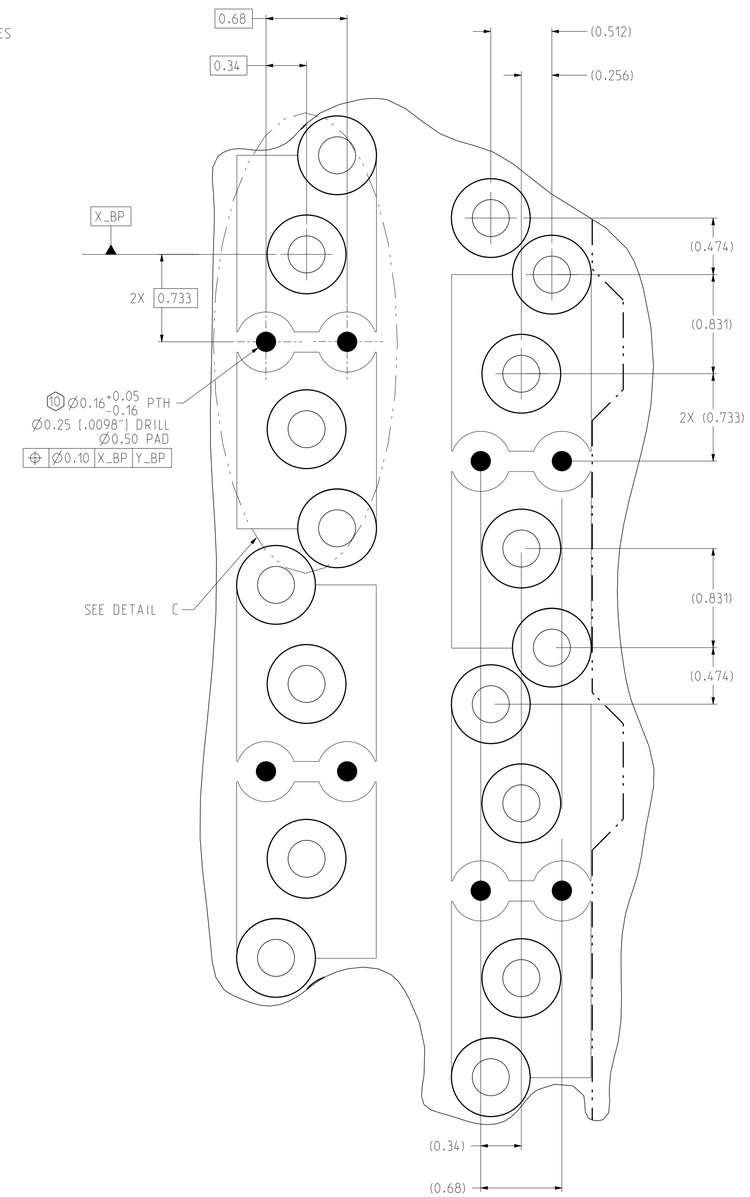


**DETAIL B**
**SHADOW VIAS (BETWEEN SIGNALS) 10**
**TYPICAL LAYOUT**
SCALE 40/1

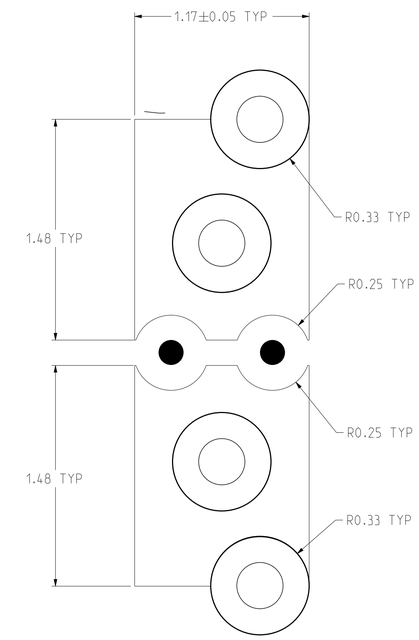


**DETAIL C**
**ANTIPAD DETAILS**
**GROUND AND SHADOW VIAS CAN BE CONNECTED AS ONE CONTINUOUS SURFACE PAD**
SCALE 50/1

| TOLERANCES | |
|---|---|
| 0.0 | ±0.25 |
| 0.00 | ±0.13 |
| 0.000 | ± - |
| ANGLES | ± 3° |

UNLESS OTHERWISE SPECIFIED DIMENSIONS ARE IN MM. DECIMAL MARKER IS A PERIOD

INTERPRET PER ASME Y14.5M

CODE IDENT 31413

CUSTOMER USE DRAWING

| | | |
|---|---|---|
| DESIGN 11/07/2016 | B.WANG | |
| DRAWN 11/07/2016 | HCL-NC | |
| CHK 11/07/2016 | B.WANG | |
| APVD 11/07/2016 | B.WANG | |

**Amphenol TCS**
A Division of Amphenol Corporation
200 Innovative Way, Nashua, NH 03062 603.879.3000

TITLE
BACKPLANE MODULES. VERTICAL MALE HEADER XCede HD2. 4 PAIR 4 POS. THICK WALL W/EXTRA GND

| PART NO. | REV |
|---|---|
| SEE P/N TREE SHEET 1 | N/A |
| DRAWING NO. C-972-401J-500 | G |
| ASSEM C972-401J-500_XG-HD2 | 0.2 |
| DRAWING C972-401J-500_XG-HD2 | 0.11 |

SIZE D | SCALE 1/1 | SHEET 8 OF 9

| DRW NO. | SH | REV |
|---|---|---|
| C-972-401J-500 | 9 | G |

| ZONE | REV | ECN NUMBER | DESCRIPTION | BY | DATE | APPROVED |
|---|---|---|---|---|---|---|
| | | | SEE SHEET 1 | | | |

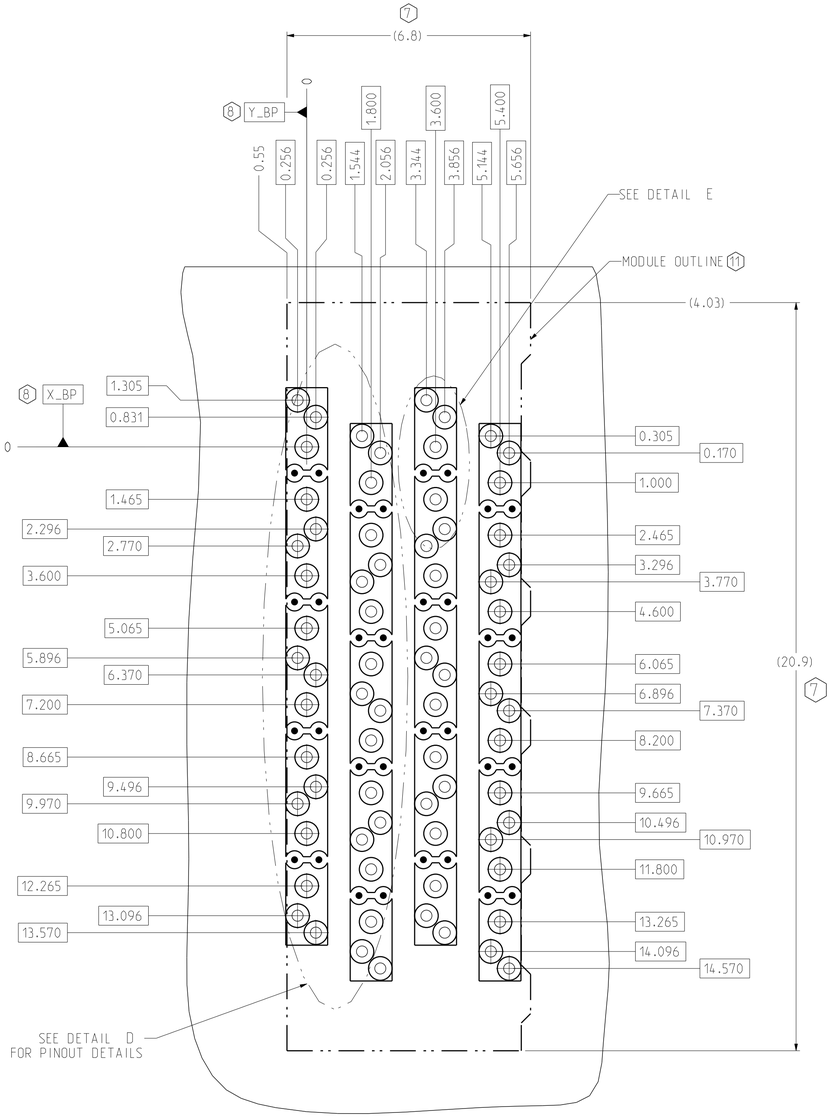


**SE_MODULE**
**BP_HOLE_PATTERN**
**COMPONENT_SIDE**
SCALE 12/1

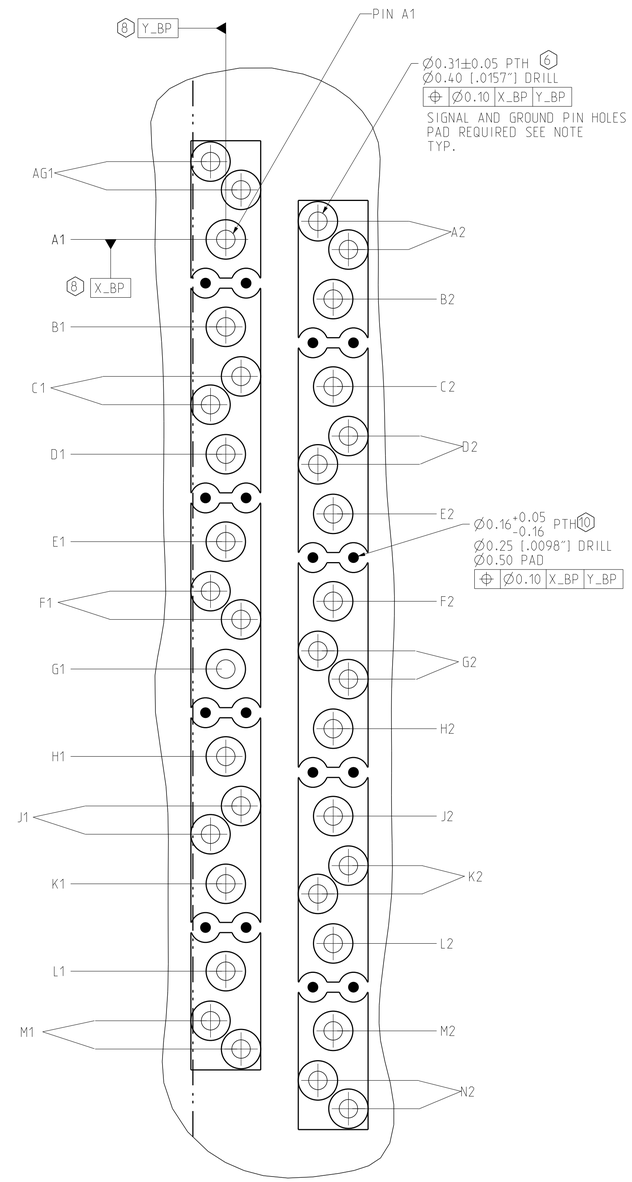


**DETAIL D**
**SE_PINOUT_DETAILS**
SCALE 20/1

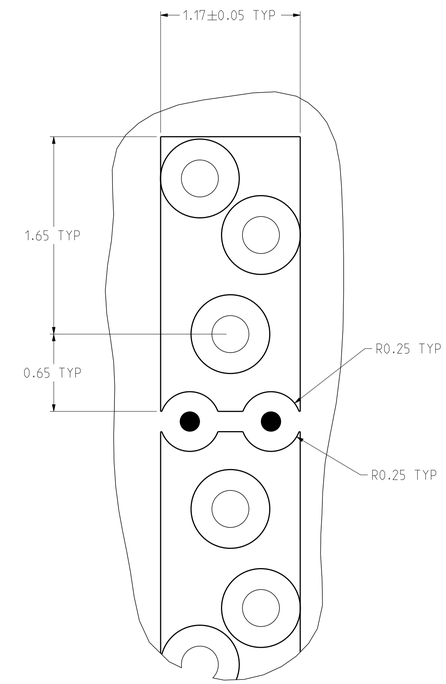


**DETAIL E**
**SE_ANTIPAD_DETAILS**
**GROUND AND SHADOW VIAS CAN BE CONNECTED AS**
**ONE CONTINUOUS SURFACE PAD**
SCALE 40/1

| TOLERANCES | |
|---|---|
| 0.0 | ±0.25 |
| 0.00 | ±0.13 |
| 0.000 | ± - |
| ANGLES | ± 3° |

| | |
|---|---|
| DESIGN 11/07/2016 | B.WANG |
| DRAWN 11/07/2016 | HCL-NC |
| CHK 11/07/2016 | B.WANG |
| APVD 11/07/2016 | B.WANG |

**Amphenol TCS**
A Division of Amphenol Corporation
200 Innovative Way, Nashua, NH 03062 603.879.3000

TITLE
BACKPLANE MODULES, VERTICAL MALE HEADER
XCede HD2, 4 PAIR 4 POS, THICK WALL W/EXTRA GND

PART NO. SEE P/N TREE SHEET 1 — REV N/A
DRAWING NO. C-972-401J-500 — REV G
ASSEM C972-401J-500_XG-HD2 0.2
DRAWING C972-401J-500_XG-HD2 0.11

UNLESS OTHERWISE SPECIFIED DIMENSIONS ARE IN MM. DECIMAL MARKER IS A PERIOD

INTERPRET PER ASME Y14.5M

CUSTOMER USE DRAWING

CODE IDENT 31413

SIZE D | SCALE 1/1 | SHEET 9 OF 9