PRODUCT NUMBER ("LF" DENOTES LEAD-FREE)	CONTACT PLATING NOTE	MATING LENGTH, DIM "X"				ROHS COMPATIBILITY
		POSN 1	POSN 2	POSN 3	POSN 4	
10124646-4444P00	2a	1.10	1.10	1.10	1.10	N/A
10124646-4444P00LF	2b					SEE NOTE 9
10124646-5555P00	2a	2.60	2.60	2.60	2.60	N/A
10124646-5555P00LF	2b					SEE NOTE 9
10124646-4555P00	2a	1.10	2.60	2.60	2.60	N/A
10124646-4555P00LF	2b					SEE NOTE 9
10124646-5455P00	2a	2.60	1.10	2.60	2.60	N/A
10124646-5455P00LF	2b					SEE NOTE 9
10124646-5545P00	2a	2.60	2.60	1.10	2.60	N/A
10124646-5545P00LF	2b					SEE NOTE 9
10124646-5554P00	2a	2.60	2.60	2.60	1.10	N/A
10124646-5554P00LF	2b					SEE NOTE 9
10124646-4554P00	2a	1.10	2.60	2.60	1.10	N/A
10124646-4554P00LF	2b					SEE NOTE 9
10124646-4455P00	2a	1.10	1.10	2.60	2.60	N/A
10124646-4455P00LF	2b					SEE NOTE 9
10124646-5544P00	2a	2.60	2.60	1.10	1.10	N/A
10124646-5544P00LF	2b					SEE NOTE 9

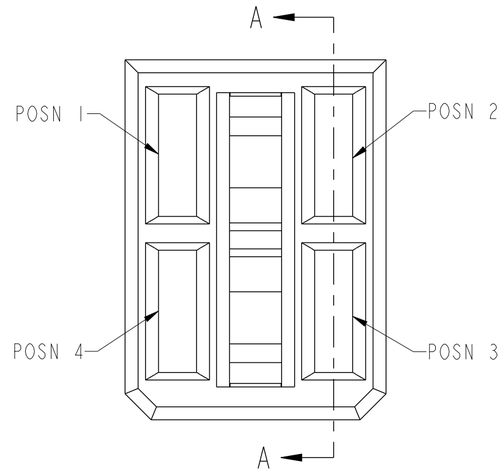

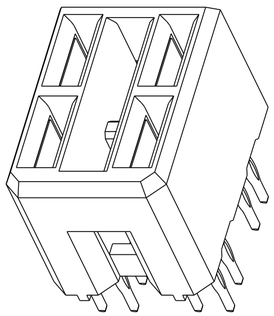

SCALE 4:1

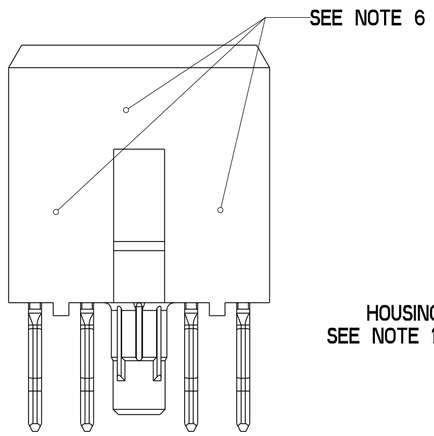

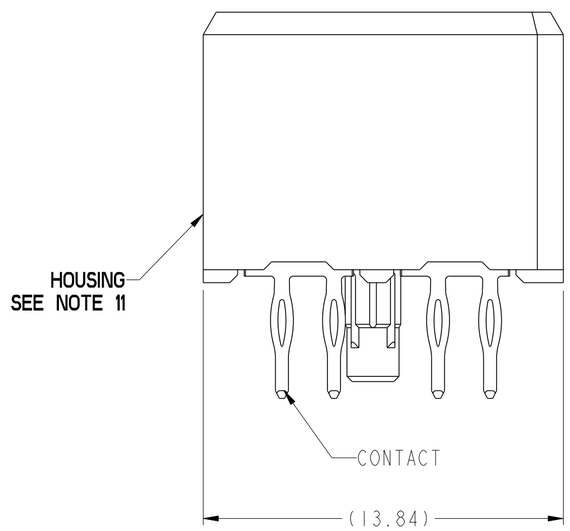

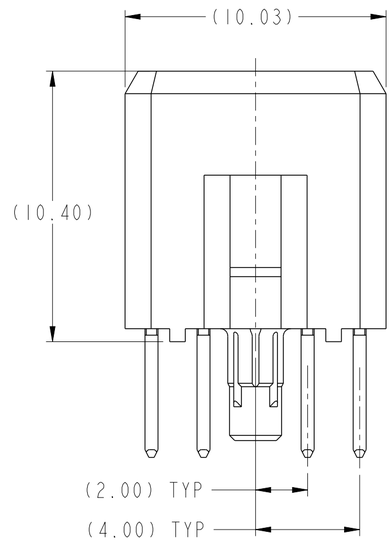

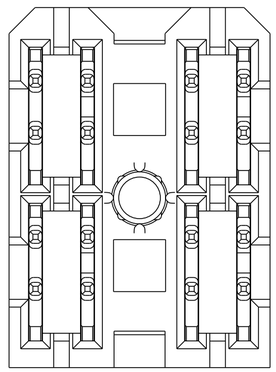

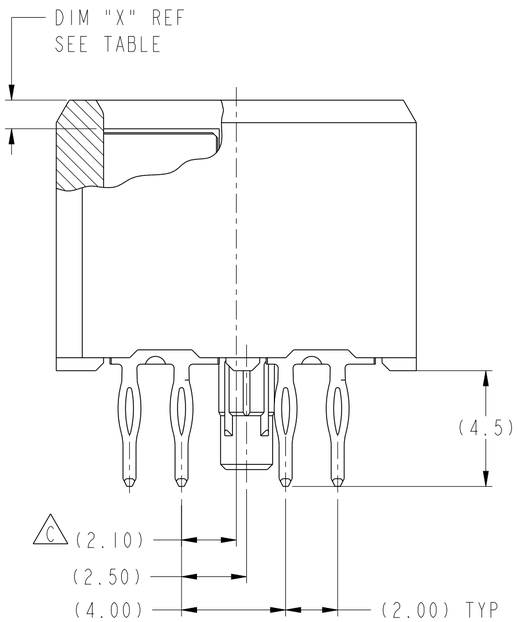

SECTION A-A

spec ref GS-12-220			dr	S Paulpandian	2013/03/11	projection	MM
tolerance std ASME Y14.5 -	TOLERANCES UNLESS OTHERWISE SPECIFIED		eng	Suzie Nah	2013/11/07	size A2	scale 6:1
			chr	-	-	ecn no	ELX-S-16034-1
			appr	Chen-Hong Tan	2013/11/14	product family 2mm High Power	rel level Released
surface 3.2 ASME Y14.5	linear	0.X ±0.3	FCI	title RECEPTACLE ASSEMBLY, 2X2 AIRMAX POWER (PERFORMANCE BASED PLATING)		dwg no 10124646	rev C
		0.XX ±0.1					
		0.XXX ±0.050					
	angular	0° ±2°	www.fci.com	cat. no. -		Product - Customer Drw	sheet 1 of 2

Copyright FCI.

TABLE 1
PLATED THROUGH-HOLE REQUIREMENTS

TOP LAYER DESCRIPTION	DRILLED HOLE DIAMETER	COPPER THICKNESS	TIN-LEAD THICKNESS	NICKEL THICKNESS	GOLD THICKNESS	TIN THICKNESS	SILVER THICKNESS	FINISHED HOLE DIAMETER (DIM"A")
TIN-LEAD	0.81-0.86 (0.85 DRILL)	0.025 - 0.050	0.005 - 0.015	--	--	--	--	0.65 - 0.80
IMMERSION TIN	0.81-0.86 (0.85 DRILL)	0.025 - 0.050	--	--	--	0.9 - 1.5um	--	0.70 - 0.80
IMMERSION SILVER	0.81-0.86 (0.85 DRILL)	0.025 - 0.050	--	--	--	--	0.15 - 0.65um	0.70 - 0.80
COPPER (SEE NOTE 12)	0.81-0.86 (0.85 DRILL)	0.025 - 0.050	--	--	--	--	--	0.70 - 0.80
GOLD	0.81-0.86 (0.85 DRILL)	0.025 - 0.050	--	0.003 - 0.007	FLASH UP TO 0.0002	--	--	0.69 - 0.80

NOTES:

1. CONNECTOR MATERIALS:
   HOUSING: HIGH TEMPERATURE THERMOPLASTIC, BLACK UL 94V-0 COMPLIANT
   CONTACT: HIGH PERFORMANCE COPPER ALLOY

2. a) CONTACT PLATING (LEADED):
   PRESS-FIT TAIL: TIN-LEAD OVER NICKEL.
   b) CONTACT PLATING (LEAD-FREE):
   PRESS-FIT TAIL: MATTE TIN OVER NICKEL.

   SEPARABLE INTERFACE: 0.76 um MIN GXT OVER NICKEL

4. PRODUCT SPECIFICATION: GS-12-220

5. APPLICATION SPECIFICATION: GS-20-023

6. PRODUCT MARKING (PRODUCT NUMBER & LOT CODE) ON HOUSING IN AREA SHOWN, EITHER SIDE.

7. MINIMUM NOMINAL BOARD THICKNESS: 2.4mm

8. REFER TO CUSTOMER DRAWING SK100359II FOR INFORMATION REGARDING PCB LAYOUT OF POWER AND GUIDE MODULES RELATIVE TO AIRMAX SIGNAL MODULES.

9. PRODUCT MEETS EUROPEAN UNION DIRECTIVES AND OTHER COUNTRY REGULATIONS AS DESCRIBED IN FCI SPECIFICATION GS-22-008.

10. PACKAGING MEETS FCI SPECIFICATION GS-14-920

11. HOUSING COMPONENT WILL WITHSTAND EXPOSURE TO 260° PEAK TEMPERATURE FOR 60 SECONDS IN A CONVECTION, INFRA-RED OR VAPOR-PHASE REFLOW OVEN.

12. COPPER PLATING THICKNESS AT CENTER OF VIA HOLE CAN BE NO MORE THAN 0.003 LESS THAN OTHER AREAS.

13. KEEPOUT AREA APPLICABLE FOR HIGH PROFILE POWER HEADER WITH 14.70MM HEIGHT ABOVE TOP SURFACE OF DAUGHTER CARD. IT MAY BE 11.5MM IF A LOWER PROFILE HEADER IS USED.

14. A △1 SYMBOL WILL BE NEXT TO ANY DIMENSION, VIEW, OR NOTE WHICH HAS BEEN MODIFIED WITH THE CURRENT DRAWING REVISION

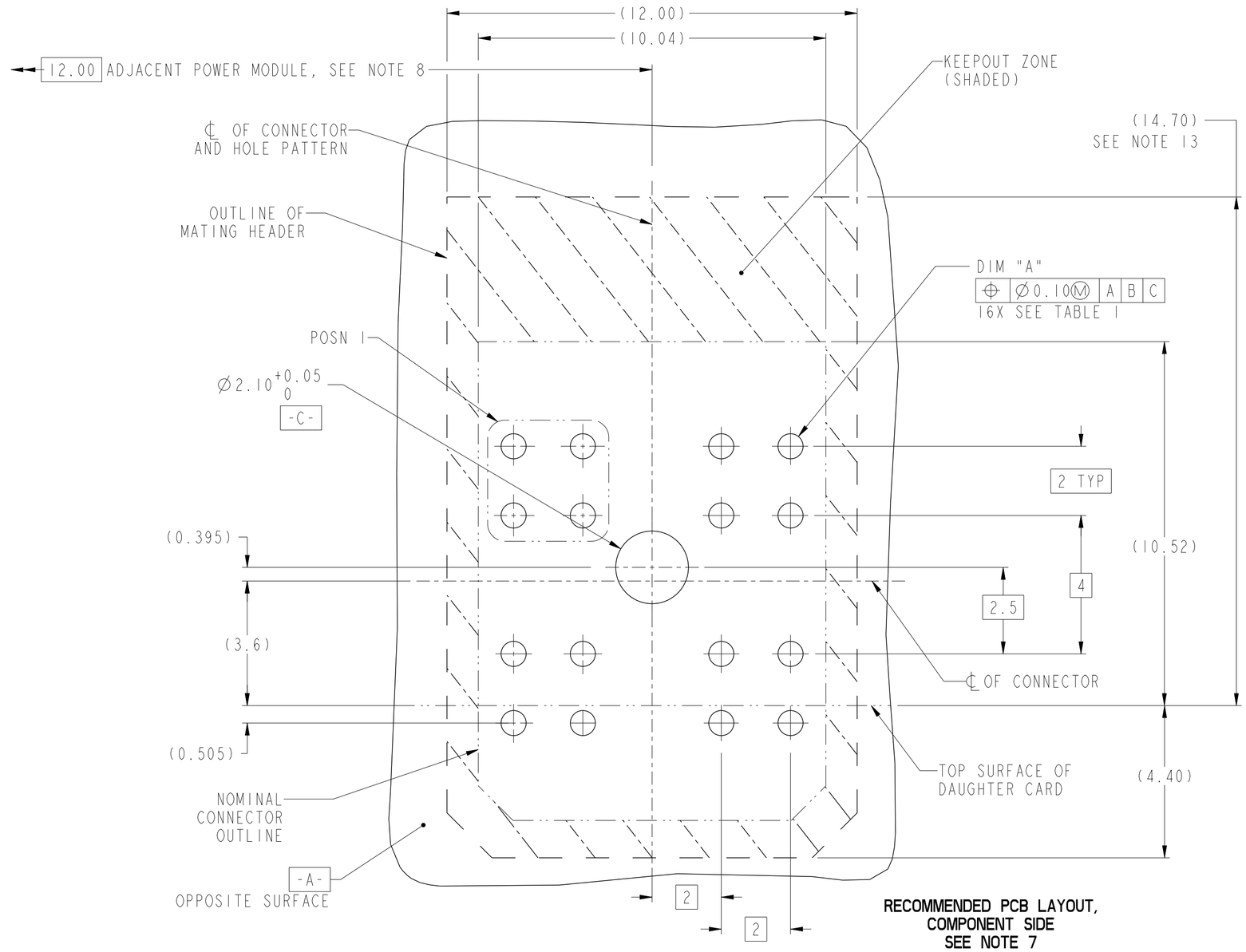

RECOMMENDED PCB LAYOUT,
COMPONENT SIDE
SEE NOTE 7
SCALE 10:1

spec ref	GS-12-220	dr	S Paulpandian	2013/03/11	projection	MM	size A2 / scale 3:1
tolerance std ASME Y14.5 -	TOLERANCES UNLESS OTHERWISE SPECIFIED	eng	Suzie Nah	2013/11/07			ecn no ELX-S-16034-1
		chr	-	-			
		appr	Chen-Hong Tan	2013/11/14	product family -		rel level Released
surface -	linear 0.X ±0.3 / 0.XX ±0.1 / 0.XXX ±0.050	FCI www.fci.com	title: RECEPTACLE ASSEMBLY, 2X2 AIRMAX POWER (PERFORMANCE BASED PLATING)		dwg no 10124646		rev C
ASME Y14.5	angular 0° ±2°		cat. no. -		Product - Customer Drw		sheet 2 of 2

Copyright FCI.