DATE	DESCRIPTION	REV.

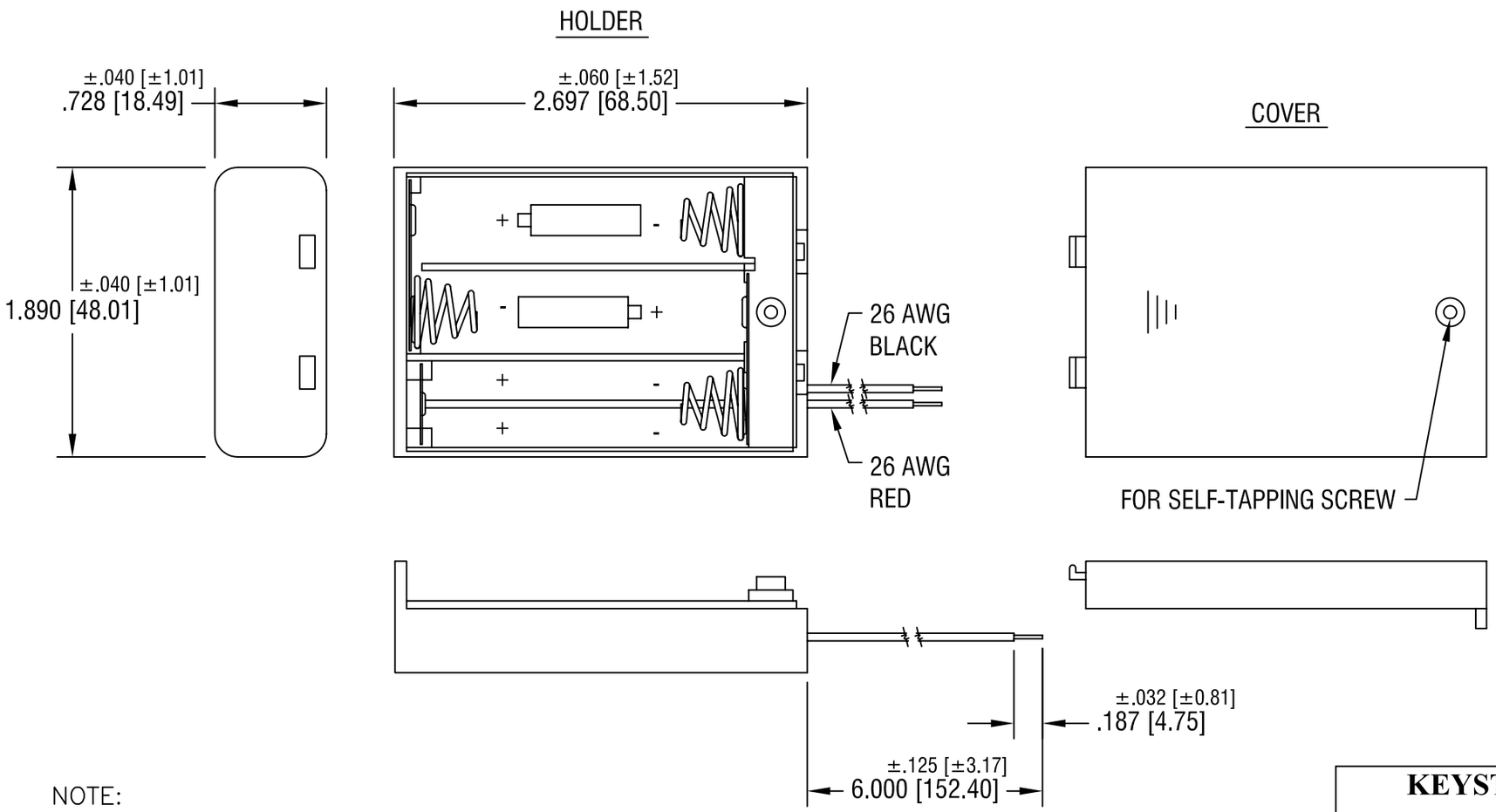

NOTE:

1. HOLDER: MAT'L: A.B.S., BLACK
   WIRE: 26 AWG, 1007 UL/CSA APPROVED
   SPRING: MAT'L: MUSIC WIRE, .020 [0.50] DIA.
   FINISH: NICKEL PLATE

THIS DOCUMENT IS THE PROPERTY OF KEYSTONE ELECTRONICS CORP. AND SHALL NOT BE REPRODUCED, DISTRIBUTED OR USED AS A BASIS FOR MANUFACTURE WITHOUT PRIOR WRITTEN PERMISSION FROM KEYSTONE ELECTRONICS CORP.

KEYSTONE ELECTRONICS CORP.
ASTORIA, N.Y. 11105-2017

PART NAME	BATTERY HOLDER & COVER, (3) 'AA'		
MATERIAL	AS NOTED		
FINISH	AS NOTED	DRN BY BOONE	DATE 3.13.00
		APP'D LN	SCALE 1X
TOLERANCES INCH [MM] DECIMAL ± .015 [± 0.38] ANGULAR ± 1° UNLESS OTHERWISE SPECIFIED	CODE C/M	DWG NO. 2487	