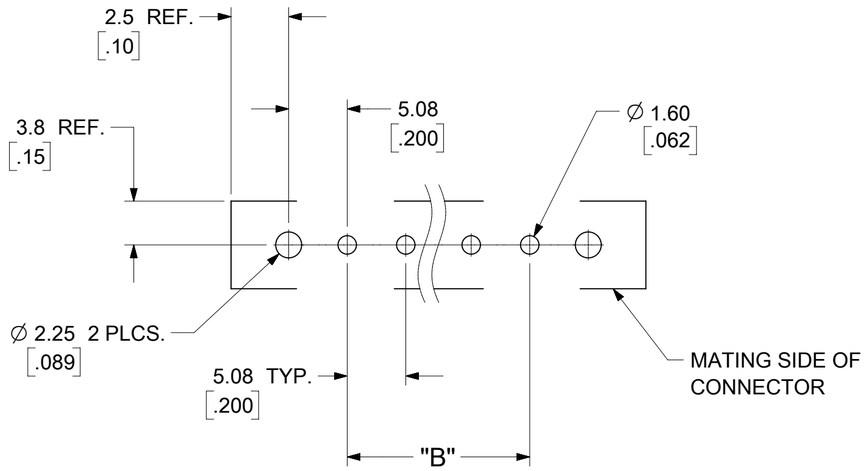

PCB LAYOUT

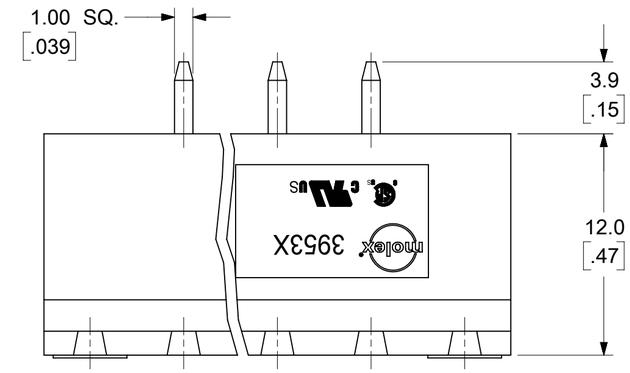

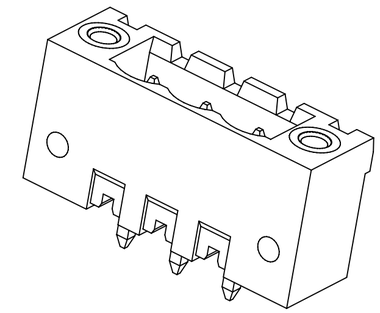

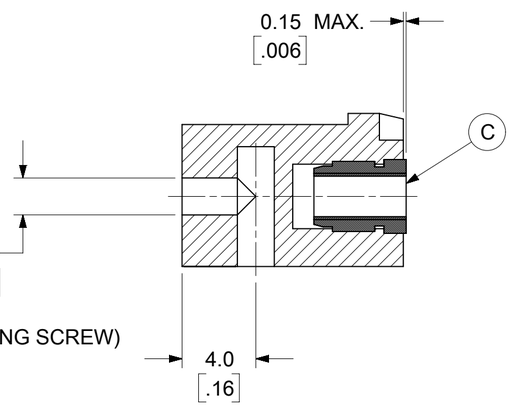

FOR ST 2.9
(2.9MM SELF TAPPING SCREW)

SECTION Y-Y

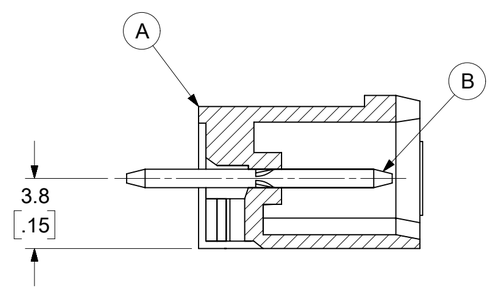

SECTION Z-Z

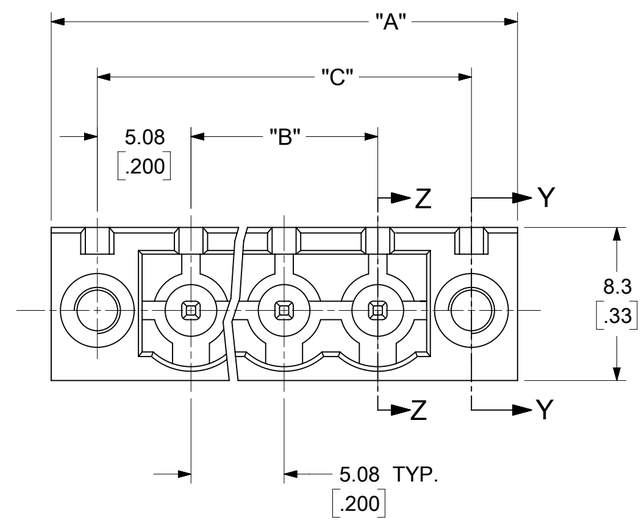

SPECIFICATIONS:

1. MATERIAL:
   (A). BODY: PA66
   (B). PIN: BRASS
   (C). THREADED INSERT: BRASS
2. WIRE RANGE: N/A
3. ELECTRICAL RATING: 300V, 15A
4. WIRE STRIP LENGTH: N/A
5. OPERATING TEMPERATURE: -40°C to +115°C
6. MAX TORQUE: N/A
7. INSULATION RESISTANCE: DC 500V, 500M
8. DIELECTRIC WITHSTAND: AC 2500V FOR 1 MINUTE
9. BREAKDOWN VOLTAGE : 4000V
10. A = (B + 15.24mm)
11. B = (N - 1) x P
12. C= (B + 10.16mm)
13. P (PITCH) = 5.08mm (.200").
14. N = NUMBER OF POSITIONS AVAILABLE 2 THROUGH 24
15. DIMS SHOWN ARE FOR REFERENCE ONLY

TOLERANCES			
MM	TOL	INCH	TOL
0-6	±0.25	0-.24	±.010
>6-30	±0.40	.24-1.18	±.016
>30-120	±0.50	1.18-4.76	±.020
>120	±0.80	>4.76	±.031

THIS DRAWING CONTAINS INFORMATION THAT IS PROPRIETARY TO MOLEX ELECTRONIC TECHNOLOGIES, LLC AND SHOULD NOT BE USED WITHOUT WRITTEN PERMISSION

SYMBOLS: = 0 / = 0 / = 0 / = 0 / = 0 / = 0 / = 0 / = 0

DIMENSION UNITS: MM/INCH — SCALE: 4:1

GENERAL TOLERANCES (UNLESS SPECIFIED)

	MM	INCH
4 PLACES	± ---	± ---
3 PLACES	± ---	± SEE CHART
2 PLACES	± SEE CHART	± SEE CHART
1 PLACE	± SEE CHART	± ---
0 PLACES	± ---	± ---
ANGULAR TOL	± ---	

DRAFT WHERE APPLICABLE MUST REMAIN WITHIN DIMENSIONS

CURRENT REV DESC: MIGRATION TO ECTR/NX

EC NO: 623382
DRWN: ABENJAMINLW 2019/07/23
CHK'D: DACHAMMER 2019/09/03
APPR: JFMURPHY 2019/09/26

INITIAL REVISION:
DRWN: LROTHAUS 2006/01/09
APPR: JPAWLICK 2006/01/10

THIRD ANGLE PROJECTION | DRAWING: C-SIZE | SERIES: 59535

molex

5.08MM, EURO HEADER
VERTICAL MOUNTING

PRODUCT CUSTOMER DRAWING

DOCUMENT NUMBER	DOC TYPE	DOC PART	REVISION
SD-39535-002	PSD	001	C2

MATERIAL NUMBER	CUSTOMER	SHEET NUMBER
SEE SHEET-2	GENERAL MARKET	1 OF 2

DOCUMENT STATUS	P1	RELEASE DATE	2019/09/26 15:47:11

FORMAT: Eng-lega-master-tb-prod-C
REVISION: D
DATE: 2018/01/18

DESCRIPTION	CIRCUIT SIZE	MATERIAL NUMBERS												DIMENSIONAL INFORMATION					
		BLACK						GREEN											
		100% TIN			30 u" GOLD			100% TIN			30 u" GOLD								
		PRINTING OPTIONS			PRINTING OPTIONS			PRINTING OPTIONS			PRINTING OPTIONS			DIM. "A"		DIM. "B"		DIM. "C"	
		None	10AV	11AV	None	10AV	11AV	None	10AV	11AV	None	10AV	11AV	mm	inch	mm	inch	mm	inch
5.08 MM, EURO HEADER, RIGHT ANGLE, MOUNTING ENDS	2	395350002	395350302	395350402	395350502	395350802	395350902	395355002	395355302	395355402	395355502	395355802	395355902	20.32	.800	5.08	.200	15.24	.600
5.08 MM, EURO HEADER, RIGHT ANGLE, MOUNTING ENDS	3	395350003	395350303	395350403	395350503	395350803	395350903	395355003	395355303	395355403	395355503	395355803	395355903	25.40	1.000	10.16	.400	20.32	.800
5.08 MM, EURO HEADER, RIGHT ANGLE, MOUNTING ENDS	4	395350004	395350304	395350404	395350504	395350804	395350904	395355004	395355304	395355404	395355504	395355804	395355904	30.48	1.200	15.24	.600	25.40	1.000
5.08 MM, EURO HEADER, RIGHT ANGLE, MOUNTING ENDS	5	395350005	395350305	395350405	395350505	395350805	395350905	395355005	395355305	395355405	395355505	395355805	395355905	35.56	1.400	20.32	.800	30.48	1.200
5.08 MM, EURO HEADER, RIGHT ANGLE, MOUNTING ENDS	6	395350006	395350306	395350406	395350506	395350806	395350906	395355006	395355306	395355406	395355506	395355806	395355906	40.64	1.600	25.40	1.000	35.56	1.400
5.08 MM, EURO HEADER, RIGHT ANGLE, MOUNTING ENDS	7	395350007	395350307	395350407	395350507	395350807	395350907	395355007	395355307	395355407	395355507	395355807	395355907	45.72	1.800	30.48	1.200	40.64	1.600
5.08 MM, EURO HEADER, RIGHT ANGLE, MOUNTING ENDS	8	395350008	395350308	395350408	395350508	395350808	395350908	395355008	395355308	395355408	395355508	395355808	395355908	50.80	2.000	35.56	1.400	45.72	1.800
5.08 MM, EURO HEADER, RIGHT ANGLE, MOUNTING ENDS	9	395350009	395350309	395350409	395350509	395350809	395350909	395355009	395355309	395355409	395355509	395355809	395355909	55.88	2.200	40.64	1.600	50.80	2.000
5.08 MM, EURO HEADER, RIGHT ANGLE, MOUNTING ENDS	10	395350010	395350310	395350410	395350510	395350810	395350910	395355010	395355310	395355410	395355510	395355810	395355910	60.96	2.400	45.72	1.800	55.88	2.200
5.08 MM, EURO HEADER, RIGHT ANGLE, MOUNTING ENDS	11	395350011	395350311	395350411	395350511	395350811	395350911	395355011	395355311	395355411	395355511	395355811	395355911	66.04	2.600	50.80	2.000	60.96	2.400
5.08 MM, EURO HEADER, RIGHT ANGLE, MOUNTING ENDS	12	395350012	395350312	395350412	395350512	395350812	395350912	395355012	395355312	395355412	395355512	395355812	395355912	71.12	2.800	55.88	2.200	66.04	2.600
5.08 MM, EURO HEADER, RIGHT ANGLE, MOUNTING ENDS	13	395350013	395350313	395350413	395350513	395350813	395350913	395355013	395355313	395355413	395355513	395355813	395355913	76.20	3.000	60.96	2.400	71.12	2.800
5.08 MM, EURO HEADER, RIGHT ANGLE, MOUNTING ENDS	14	395350014	395350314	395350414	395350514	395350814	395350914	395355014	395355314	395355414	395355514	395355814	395355914	81.28	3.200	66.04	2.600	76.20	3.000
5.08 MM, EURO HEADER, RIGHT ANGLE, MOUNTING ENDS	15	395350015	395350315	395350415	395350515	395350815	395350915	395355015	395355315	395355415	395355515	395355815	395355915	86.36	3.400	71.12	2.800	81.28	3.200
5.08 MM, EURO HEADER, RIGHT ANGLE, MOUNTING ENDS	16	395350016	395350316	395350416	395350516	395350816	395350916	395355016	395355316	395355416	395355516	395355816	395355916	91.44	3.600	76.20	3.000	86.36	3.400
5.08 MM, EURO HEADER, RIGHT ANGLE, MOUNTING ENDS	17	395350017	395350317	395350417	395350517	395350817	395350917	395355017	395355317	395355417	395355517	395355817	395355917	96.52	3.800	81.28	3.200	91.44	3.600
5.08 MM, EURO HEADER, RIGHT ANGLE, MOUNTING ENDS	18	395350018	395350318	395350418	395350518	395350818	395350918	395355018	395355318	395355418	395355518	395355818	395355918	101.60	4.000	86.36	3.400	96.52	3.800
5.08 MM, EURO HEADER, RIGHT ANGLE, MOUNTING ENDS	19	395350019	395350319	395350419	395350519	395350819	395350919	395355019	395355319	395355419	395355519	395355819	395355919	106.68	4.200	91.44	3.600	101.60	4.000
5.08 MM, EURO HEADER, RIGHT ANGLE, MOUNTING ENDS	20	395350020	395350320	395350420	395350520	395350820	395350920	395355020	395355320	395355420	395355520	395355820	395355920	111.76	4.400	96.52	3.800	106.68	4.200
5.08 MM, EURO HEADER, RIGHT ANGLE, MOUNTING ENDS	21	395350021	395350321	395350421	395350521	395350821	395350921	395355021	395355321	395355421	395355521	395355821	395355921	116.84	4.600	101.60	4.000	111.76	4.400
5.08 MM, EURO HEADER, RIGHT ANGLE, MOUNTING ENDS	22	395350022	395350322	395350422	395350522	395350822	395350922	395355022	395355322	395355422	395355522	395355822	395355922	121.92	4.800	106.68	4.200	116.84	4.600
5.08 MM, EURO HEADER, RIGHT ANGLE, MOUNTING ENDS	23	395350023	395350323	395350423	395350523	395350823	395350923	395355023	395355323	395355423	395355523	395355823	395355923	127.00	5.000	111.76	4.400	121.92	4.800
5.08 MM, EURO HEADER, RIGHT ANGLE, MOUNTING ENDS	24	395350024	395350324	395350424	395350524	395350824	395350924	395355024	395355324	395355424	395355524	395355824	395355924	132.08	5.200	116.84	4.600	127.00	5.000

TOLERANCES			
MM	TOL	INCH	TOL
0-6	±0.25	0-.24	±.010
>6-30	±0.40	.24-1.18	±.016
>30-120	±0.50	1.18-4.76	±.020
>120	±0.80	>4.76	±.031

SYMBOLS

= 0
= 0
= 0
= 0
= 0
= 0
= 0
= 0
= 0

THIS DRAWING CONTAINS INFORMATION THAT IS PROPRIETARY TO MOLEX ELECTRONIC TECHNOLOGIES, LLC AND SHOULD NOT BE USED WITHOUT WRITTEN PERMISSION

DIMENSION UNITS: MM/INCH
SCALE: 4:1

GENERAL TOLERANCES (UNLESS SPECIFIED)

	MM	INCH
4 PLACES	± ---	± ---
3 PLACES	± ---	± SEE CHART
2 PLACES	± SEE CHART	± SEE CHART
1 PLACE	± SEE CHART	± ---
0 PLACES	± ---	± ---
ANGULAR TOL	± ---	

DRAFT WHERE APPLICABLE MUST REMAIN WITHIN DIMENSIONS

CURRENT REV DESC: MIGRATION TO ECTR/NX

EC NO: 623382
DRWN: ABENJAMINLW 2019/07/23
CHK'D: DACHAMMER 2019/09/03
APPR: JFMURPHY 2019/09/26

INITIAL REVISION:
DRWN: LROTHAUS 2006/01/09
APPR: JPAWLICK 2006/01/10

THIRD ANGLE PROJECTION | DRAWING: C-SIZE | SERIES: 59535

molex

5.08MM, EURO HEADER
VERTICAL MOUNTING

PRODUCT CUSTOMER DRAWING

DOCUMENT NUMBER	DOC TYPE	DOC PART	REVISION
SD-39535-002	PSD	001	C2

MATERIAL NUMBER	CUSTOMER	SHEET NUMBER
SEE TABLE	GENERAL MARKET	2 OF 2

DOCUMENT STATUS	P1	RELEASE DATE	2019/09/26 15:47:11

FORMAT: Eng-lega-master-tb-prod-C
REVISION: D
DATE: 2018/01/18

Description	Circuit size	Material Numbers: Black, 100% Tin, Printing Options: None	Black, 100% Tin, 10/AV	Black, 100% Tin, 11/AV	Black, 30 u" Gold, Printing Options: None	Black, 30 u" Gold, 10/AV	Black, 30 u" Gold, 11/AV	Green, 100% Tin, Printing Options: None	Green, 100% Tin, 10/AV	Green, 100% Tin, 11/AV	Green, 30 u" Gold, Printing Options: None	Green, 30 u" Gold, 10/AV	Green, 30 u" Gold, 11/AV	Dimensional Information: Dim. A mm	Dim. A inch	Dim. B mm	Dim. B inch	Dim. C mm	Dim. C inch
5.08mm, Euro Header, Vertical, Mounting Ends	2	395350002	395350302	395350402	395350502	395350802	395350902	395355002	395355302	395355402	395355502	395355802	395355902	20.32	0.800	5.08	0.200	15.24	0.600
5.08mm, Euro Header, Vertical, Mounting Ends	3	395350003	395350303	395350403	395350503	395350803	395350903	395355003	395355303	395355403	395355503	395355803	395355903	25.40	1.000	10.16	0.400	20.32	0.800
5.08mm, Euro Header, Vertical, Mounting Ends	4	395350004	395350304	395350404	395350504	395350804	395350904	395355004	395355304	395355404	395355504	395355804	395355904	30.48	1.200	15.24	0.600	25.40	1.000
5.08mm, Euro Header, Vertical, Mounting Ends	5	395350005	395350305	395350405	395350505	395350805	395350905	395355005	395355305	395355405	395355505	395355805	395355905	35.56	1.400	20.32	0.800	30.48	1.200
5.08mm, Euro Header, Vertical, Mounting Ends	6	395350006	395350306	395350406	395350506	395350806	395350906	395355006	395355306	395355406	395355506	395355806	395355906	40.64	1.600	25.40	1.000	35.56	1.400
5.08mm, Euro Header, Vertical, Mounting Ends	7	395350007	395350307	395350407	395350507	395350807	395350907	395355007	395355307	395355407	395355507	395355807	395355907	45.72	1.800	30.48	1.200	40.64	1.600
5.08mm, Euro Header, Vertical, Mounting Ends	8	395350008	395350308	395350408	395350508	395350808	395350908	395355008	395355308	395355408	395355508	395355808	395355908	50.80	2.000	35.56	1.400	45.72	1.800
5.08mm, Euro Header, Vertical, Mounting Ends	9	395350009	395350309	395350409	395350509	395350809	395350909	395355009	395355309	395355409	395355509	395355809	395355909	55.88	2.200	40.64	1.600	50.80	2.000
5.08mm, Euro Header, Vertical, Mounting Ends	10	395350010	395350310	395350410	395350510	395350810	395350910	395355010	395355310	395355410	395355510	395355810	395355910	60.96	2.400	45.72	1.800	55.88	2.200
5.08mm, Euro Header, Vertical, Mounting Ends	11	395350011	395350311	395350411	395350511	395350811	395350911	395355011	395355311	395355411	395355511	395355811	395355911	66.04	2.600	50.80	2.000	60.96	2.400
5.08mm, Euro Header, Vertical, Mounting Ends	12	395350012	395350312	395350412	395350512	395350812	395350912	395355012	395355312	395355412	395355512	395355812	395355912	71.12	2.800	55.88	2.200	66.04	2.600
5.08mm, Euro Header, Vertical, Mounting Ends	13	395350013	395350313	395350413	395350513	395350813	395350913	395355013	395355313	395355413	395355513	395355813	395355913	76.20	3.000	60.96	2.400	71.12	2.800
5.08mm, Euro Header, Vertical, Mounting Ends	14	395350014	395350314	395350414	395350514	395350814	395350914	395355014	395355314	395355414	395355514	395355814	395355914	81.28	3.200	66.04	2.600	76.20	3.000
5.08mm, Euro Header, Vertical, Mounting Ends	15	395350015	395350315	395350415	395350515	395350815	395350915	395355015	395355315	395355415	395355515	395355815	395355915	86.36	3.400	71.12	2.800	81.28	3.200
5.08mm, Euro Header, Vertical, Mounting Ends	16	395350016	395350316	395350416	395350516	395350816	395350916	395355016	395355316	395355416	395355516	395355816	395355916	91.44	3.600	76.20	3.000	86.36	3.400
5.08mm, Euro Header, Vertical, Mounting Ends	17	395350017	395350317	395350417	395350517	395350817	395350917	395355017	395355317	395355417	395355517	395355817	395355917	96.52	3.800	81.28	3.200	91.44	3.600
5.08mm, Euro Header, Vertical, Mounting Ends	18	395350018	395350318	395350418	395350518	395350818	395350918	395355018	395355318	395355418	395355518	395355818	395355918	101.60	4.000	86.36	3.400	96.52	3.800
5.08mm, Euro Header, Vertical, Mounting Ends	19	395350019	395350319	395350419	395350519	395350819	395350919	395355019	395355319	395355419	395355519	395355819	395355919	106.68	4.200	91.44	3.600	101.60	4.000
5.08mm, Euro Header, Vertical, Mounting Ends	20	395350020	395350320	395350420	395350520	395350820	395350920	395355020	395355320	395355420	395355520	395355820	395355920	111.76	4.400	96.52	3.800	106.68	4.200
5.08mm, Euro Header, Vertical, Mounting Ends	21	395350021	395350321	395350421	395350521	395350821	395350921	395355021	395355321	395355421	395355521	395355821	395355921	116.84	4.600	101.60	4.000	111.76	4.400
5.08mm, Euro Header, Vertical, Mounting Ends	22	395350022	395350322	395350422	395350522	395350822	395350922	395355022	395355322	395355422	395355522	395355822	395350922	121.92	4.800	106.68	4.200	116.84	4.600
5.08mm, Euro Header, Vertical, Mounting Ends	23	395350023	395350323	395350423	395350523	395350823	395350923	395355023	395355323	395355423	395355523	395355823	395355923	127.00	5.000	111.76	4.400	121.92	4.800
5.08mm, Euro Header, Vertical, Mounting Ends	24	395350024	395350324	395350424	395350524	395350824	395350924	395355024	395355324	395355424	395355524	395355824	395355924	132.08	5.200	116.84	4.600	127.00	5.000

TOLERANCES			
MM	TOL	INCH	TOL
0-6	±0.25	0-.24	±.010
>6-30	±0.40	.24-1.18	±.016
>30-120	±0.50	1.18-4.76	±.020
>120	±0.80	>4.76	±.031

SEE SHEET 1
EC NO: IPG2017-0881 2017/03/24
DRWN:CRAODOREMS
CH'KD:
APPR:BRUPERT 2017/04/18
DESCRIPTION
B1
REV

QUALITY SYMBOLS
▼=0
▽=0

GENERAL TOLERANCES (UNLESS SPECIFIED)

	mm	INCH
4 PLACES	± ---	± ---
3 PLACES	± ---	± ---
2 PLACES	± ---	± ---
1 PLACE	± ---	± ---
ANGULAR ±---°		

DRAFT WHERE APPLICABLE MUST REMAIN WITHIN DIMENSIONS

DIMENSION STYLE: MM/IN
SCALE
DESIGN UNITS: INCH
THIRD ANGLE PROJECTION

DRAWN BY: LROTHAUS DATE: 12/6/05
CHECKED BY: C. YORK DATE: 01/05/06
APPROVED BY DATE

TITLE: 5.08MM, EURO HEADER, VERTICAL, MOUNTING

molex MOLEX INCORPORATED

MATERIAL NO.: SEE CHART
DOCUMENT NO.: SD-39535-002
SHEET NO.: 2 OF 2
SIZE: B

THIS DRAWING CONTAINS INFORMATION THAT IS PROPRIETARY TO MOLEX INCORPORATED AND SHOULD NOT BE USED WITHOUT WRITTEN PERMISSION

Description	Circuit size	Material Numbers: Black, 100% Tin, Printing Options: None	Black, 100% Tin, 10/AV	Black, 100% Tin, 11/AV	Black, 30 u" Gold, Printing Options: None	Black, 30 u" Gold, 10/AV	Black, 30 u" Gold, 11/AV	Green, 100% Tin, Printing Options: None	Green, 100% Tin, 10/AV	Green, 100% Tin, 11/AV	Green, 30 u" Gold, Printing Options: None	Green, 30 u" Gold, 10/AV	Green, 30 u" Gold, 11/AV	Dimensional Information: Dim. A mm	Dim. A inch	Dim. B mm	Dim. B inch	Dim. C mm	Dim. C inch
5.08mm, Euro Header, Vertical, Mounting Ends	2	395350002	395350302	395350402	395350502	395350802	395350902	395355002	395355302	395355402	395355502	395355802	395355902	20.32	0.800	5.08	0.200	15.24	0.600
5.08mm, Euro Header, Vertical, Mounting Ends	3	395350003	395350303	395350403	395350503	395350803	395350903	395355003	395355303	395355403	395355503	395355803	395355903	25.40	1.000	10.16	0.400	20.32	0.800
5.08mm, Euro Header, Vertical, Mounting Ends	4	395350004	395350304	395350404	395350504	395350804	395350904	395355004	395355304	395355404	395355504	395355804	395355904	30.48	1.200	15.24	0.600	25.40	1.000
5.08mm, Euro Header, Vertical, Mounting Ends	5	395350005	395350305	395350405	395350505	395350805	395350905	395355005	395355305	395355405	395355505	395355805	395355905	35.56	1.400	20.32	0.800	30.48	1.200
5.08mm, Euro Header, Vertical, Mounting Ends	6	395350006	395350306	395350406	395350506	395350806	395350906	395355006	395355306	395355406	395355506	395355806	395355906	40.64	1.600	25.40	1.000	35.56	1.400
5.08mm, Euro Header, Vertical, Mounting Ends	7	395350007	395350307	395350407	395350507	395350807	395350907	395355007	395355307	395355407	395355507	395355807	395355907	45.72	1.800	30.48	1.200	40.64	1.600
5.08mm, Euro Header, Vertical, Mounting Ends	8	395350008	395350308	395350408	395350508	395350808	395350908	395355008	395355308	395355408	395355508	395355808	395355908	50.80	2.000	35.56	1.400	45.72	1.800
5.08mm, Euro Header, Vertical, Mounting Ends	9	395350009	395350309	395350409	395350509	395350809	395350909	395355009	395355309	395355409	395355509	395355809	395355909	55.88	2.200	40.64	1.600	50.80	2.000
5.08mm, Euro Header, Vertical, Mounting Ends	10	395350010	395350310	395350410	395350510	395350810	395350910	395355010	395355310	395355410	395355510	395355810	395355910	60.96	2.400	45.72	1.800	55.88	2.200
5.08mm, Euro Header, Vertical, Mounting Ends	11	395350011	395350311	395350411	395350511	395350811	395350911	395355011	395355311	395355411	395355511	395355811	395355911	66.04	2.600	50.80	2.000	60.96	2.400
5.08mm, Euro Header, Vertical, Mounting Ends	12	395350012	395350312	395350412	395350512	395350812	395350912	395355012	395355312	395355412	395355512	395355812	395355912	71.12	2.800	55.88	2.200	66.04	2.600
5.08mm, Euro Header, Vertical, Mounting Ends	13	395350013	395350313	395350413	395350513	395350813	395350913	395355013	395355313	395355413	395355513	395355813	395355913	76.20	3.000	60.96	2.400	71.12	2.800
5.08mm, Euro Header, Vertical, Mounting Ends	14	395350014	395350314	395350414	395350514	395350814	395350914	395355014	395355314	395355414	395355514	395355814	395355914	81.28	3.200	66.04	2.600	76.20	3.000
5.08mm, Euro Header, Vertical, Mounting Ends	15	395350015	395350315	395350415	395350515	395350815	395350915	395355015	395355315	395355415	395355515	395355815	395355915	86.36	3.400	71.12	2.800	81.28	3.200
5.08mm, Euro Header, Vertical, Mounting Ends	16	395350016	395350316	395350416	395350516	395350816	395350916	395355016	395355316	395355416	395355516	395355816	395355916	91.44	3.600	76.20	3.000	86.36	3.400
5.08mm, Euro Header, Vertical, Mounting Ends	17	395350017	395350317	395350417	395350517	395350817	395350917	395355017	395355317	395355417	395355517	395355817	395355917	96.52	3.800	81.28	3.200	91.44	3.600
5.08mm, Euro Header, Vertical, Mounting Ends	18	395350018	395350318	395350418	395350518	395350818	395350918	395355018	395355318	395355418	395355518	395355818	395355918	101.60	4.000	86.36	3.400	96.52	3.800
5.08mm, Euro Header, Vertical, Mounting Ends	19	395350019	395350319	395350419	395350519	395350819	395350919	395355019	395355319	395355419	395355519	395355819	395355919	106.68	4.200	91.44	3.600	101.60	4.000
5.08mm, Euro Header, Vertical, Mounting Ends	20	395350020	395350320	395350420	395350520	395350820	395350920	395355020	395355320	395355420	395355520	395355820	395355920	111.76	4.400	96.52	3.800	106.68	4.200
5.08mm, Euro Header, Vertical, Mounting Ends	21	395350021	395350321	395350421	395350521	395350821	395350921	395355021	395355321	395355421	395355521	395355821	395355921	116.84	4.600	101.60	4.000	111.76	4.400
5.08mm, Euro Header, Vertical, Mounting Ends	22	395350022	395350322	395350422	395350522	395350822	395350922	395355022	395355322	395355422	395355522	395355822	395350922	121.92	4.800	106.68	4.200	116.84	4.600
5.08mm, Euro Header, Vertical, Mounting Ends	23	395350023	395350323	395350423	395350523	395350823	395350923	395355023	395355323	395355423	395355523	395355823	395355923	127.00	5.000	111.76	4.400	121.92	4.800
5.08mm, Euro Header, Vertical, Mounting Ends	24	395350024	395350324	395350424	395350524	395350824	395350924	395355024	395355324	395355424	395355524	395355824	395355924	132.08	5.200	116.84	4.600	127.00	5.000

TOLERANCES			
MM	TOL	INCH	TOL
0-6	±0.25	0-.24	±.010
>6-30	±0.40	.24-1.18	±.016
>30-120	±0.50	1.18-4.76	±.020
>120	±0.80	>4.76	±.031

SEE SHEET 1
EC NO: IPG2017-0881 2017/03/24
DRWN:CRAODOREMS
CH'KD:
APPR:BRUPERT 2017/04/18
DESCRIPTION
B1
REV

QUALITY SYMBOLS
▼=0
▽=0

GENERAL TOLERANCES (UNLESS SPECIFIED)

	mm	INCH
4 PLACES	± ---	± ---
3 PLACES	± ---	± ---
2 PLACES	± ---	± ---
1 PLACE	± ---	± ---
ANGULAR ±---°		

DRAFT WHERE APPLICABLE MUST REMAIN WITHIN DIMENSIONS

DIMENSION STYLE: MM/IN
SCALE
DESIGN UNITS: INCH
THIRD ANGLE PROJECTION

DRAWN BY: LROTHAUS DATE: 12/6/05
CHECKED BY: C. YORK DATE: 01/05/06
APPROVED BY DATE

TITLE: 5.08MM, EURO HEADER, VERTICAL, MOUNTING

molex MOLEX INCORPORATED

MATERIAL NO.: SEE CHART
DOCUMENT NO.: SD-39535-002
SHEET NO.: 2 OF 2
SIZE: B

THIS DRAWING CONTAINS INFORMATION THAT IS PROPRIETARY TO MOLEX INCORPORATED AND SHOULD NOT BE USED WITHOUT WRITTEN PERMISSION