Features

- Low Forward Voltage
- Ultra Low Reverse Leakage
- Excellent High Temperature Stability
- Patented Super Barrier Rectifier Technology
- Soft, Fast Switching Capability
- **Lead-Free Finish; RoHS Compliant (Notes 1 & 2)**
- **Halogen and Antimony Free. "Green" Device (Note 3)**

Mechanical Data

- Case: SOT323
- Case Material: Molded Plastic, "Green" Molding Compound. UL Flammability Classification Rating 94V-0
- Patented Super Barrier Rectifier SBR® Technology
- Moisture Sensitivity: Level 1 per J-STD-020
- Terminals: Finish - Matte Tin Annealed over Alloy 42 Leadframe. Solderable per MIL-STD-202, Method 208 e3
- Terminal Connections: See Diagram
- Weight: 0.008 grams (Approximate)

SOT323

Top View

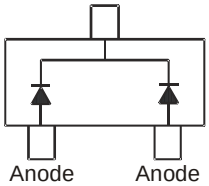

Equivalent Circuit

Ordering Information (Note 4)

Part Number	Case	Packaging
SBR0330CW-7	SOT323	3,000/Tape & Reel

Notes:
1. EU Directive 2002/95/EC (RoHS) & 2011/65/EU (RoHS 2) compliant. All applicable RoHS exemptions applied.
2. See http://www.diodes.com/quality/lead_free.html for more information about Diodes Incorporated's definitions of Halogen- and Antimony-free, "Green" and Lead-free.
3. Halogen- and Antimony-free "Green" products are defined as those which contain <900ppm bromine, <900ppm chlorine (<1500ppm total Br + Cl) and <1000ppm antimony compounds.
4. For packaging details, go to our website at http://www.diodes.com/products/packages.html.

Marking Information

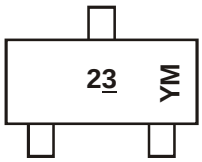

23 = Product Type Marking Code
YM = Date Code Marking
Y = Year (ex: C = 2015)
M = Month (ex: 9 = September)

Date Code Key

Year	2015	2016	2017	2018	2019	2020	2021	2022	2023	2024
Code	C	D	E	F	G	H	I	J	K	L

Month	Jan	Feb	Mar	Apr	May	Jun	Jul	Aug	Sep	Oct	Nov	Dec
Code	1	2	3	4	5	6	7	8	9	O	N	D

SBR is a registered trademark of Diodes Incorporated

© Diodes Incorporated

Maximum Ratings (@T_A = +25°C, unless otherwise specified.)

Single phase, half wave, 60Hz, resistive or inductive load.
For capacitance load, derate current by 20%.

Characteristic	Symbol	Value	Unit
Peak Repetitive Reverse Voltage Working Peak Reverse Voltage DC Blocking Voltage	V_{RRM} V_{RWM} V_{RM}	30	V
DC Forward Current	I_F (Per diode)	0.3	A
Average Rectified Output Current	Io		
Non-Repetitive Peak Forward Surge Current 8.3ms Single Half Sine-Wave Superimposed on Rated Load	I_{FSM}	1	A

Thermal Characteristics

Characteristic	Symbol	Value	Unit
Typical Thermal Resistance Thermal Resistance Junction to Ambient (Note 5)	$R_{\theta JA}$	261	°C/W
Typical Thermal Resistance Thermal Resistance Junction to Ambient (Note 6)	$R_{\theta JA}$	445	°C/W
Operating and Storage Temperature Range	T_J, T_{STG}	-65 to +150	°C

Electrical Characteristics (@T_A = +25°C, unless otherwise specified.)

Characteristic	Symbol	Min	Typ	Max	Unit	Test Condition
Forward Voltage Drop	V_F	—	—	240	mV	I_F = 0.1mA, T_J = +25°C
		—	—	300		I_F = 1mA, T_J = +25°C
		—	—	375		I_F = 10mA, T_J = +25°C
		—	—	430		I_F = 30mA, T_J = +25°C
		—	—	500		I_F = 100mA, T_J = +25°C
		—	—	580		I_F = 200mA, T_J = +25°C
		—	530	—		I_F = 300mA, T_J = +25°C
Leakage Current (Note 7)	I_R	—	—	5	µA	V_R = 30V, T_J = +25°C
		—	0.63	3		V_R = 25V, T_J = +25°C
		—	—	1		V_R = 10V, T_J = +25°C
		—	0.35	0.8		V_R = 5V, T_J = +25°C
		—	7	20		V_R = 10V, T_J = +70°C
		—	18	50		V_R = 10V, T_J = +85°C

Notes: 5. Device mounted on Polymide substrate, 10cm x 10cm, 2oz, copper, PC boards.
6. Device mounted on FR-4 PCB, 2oz. Copper, minimum recommended pad layout per http://www.diodes.com/datasheets/ap02001.pdf.
7. Short duration pulse test used to minimize self-heating effect.

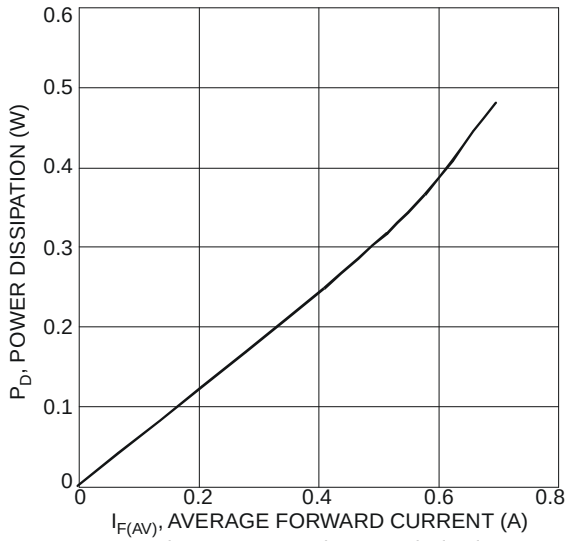

Figure 1. Forward Power Dissipation

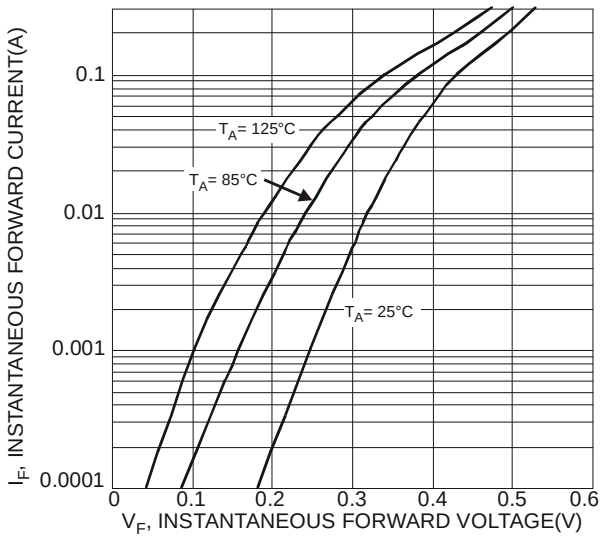

Figure 2. Typical Forward Characteristics

© Diodes Incorporated

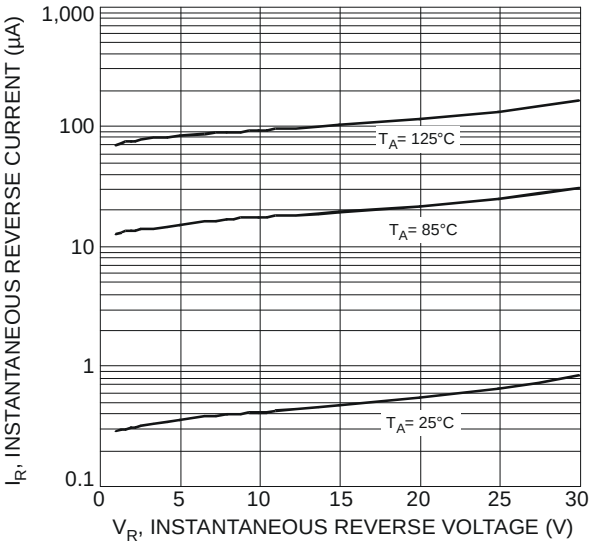

Figure 3. Typical Reverse Characteristics

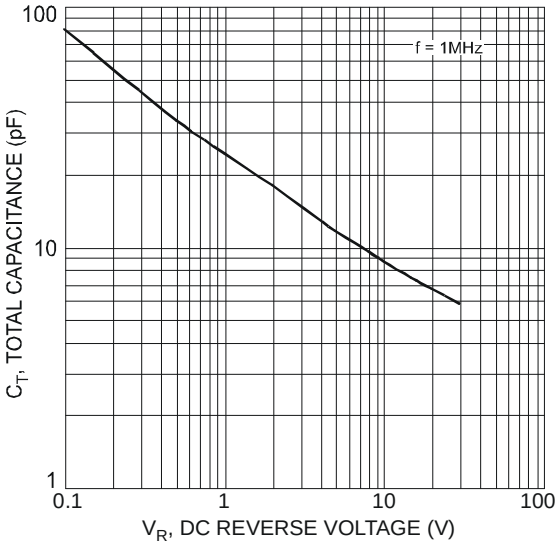

Figure 4. Total Capacitance vs. Reverse Voltage

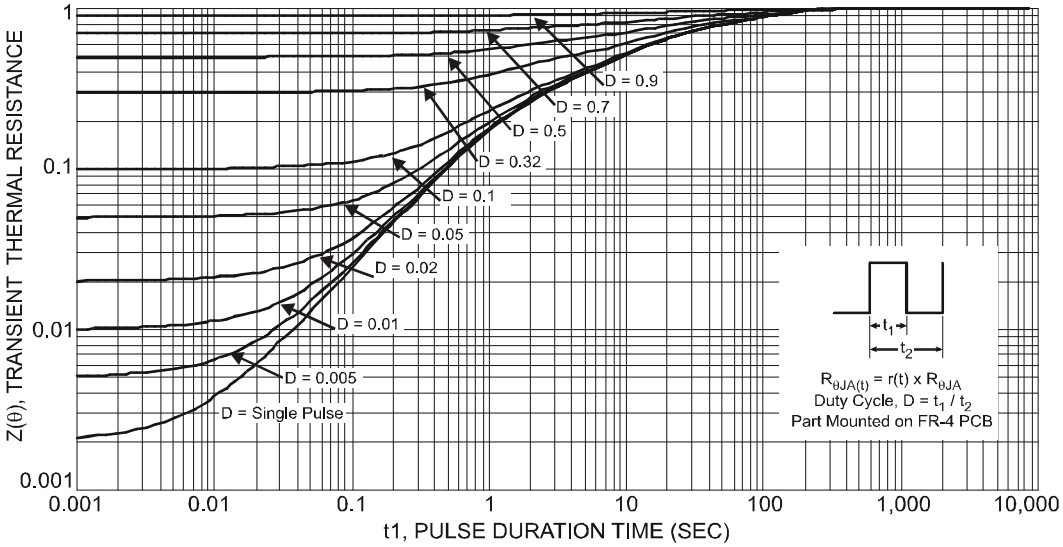

Figure 5. Transient Thermal Resistance

© Diodes Incorporated

Package Outline Dimensions

Please see AP02002 at http://www.diodes.com/datasheets/ap02002.pdf for the latest version.

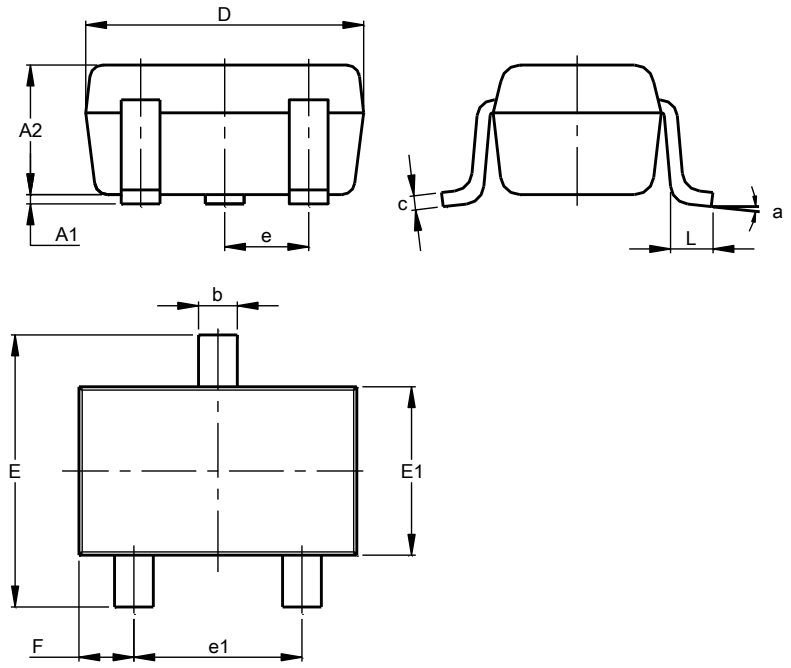

SOT323			
Dim	**Min**	**Max**	**Typ**
A1	0.00	0.10	0.05
A2	0.90	1.00	0.95
b	0.25	0.40	0.30
c	0.10	0.18	0.11
D	1.80	2.20	2.15
E	2.00	2.20	2.10
E1	1.15	1.35	1.30
e	0.650 BSC		
e1	1.20	1.40	1.30
F	0.375	0.475	0.425
L	0.25	0.40	0.30
a	8°		
All Dimensions in mm			

Suggested Pad Layout

Please see AP02002 at http://www.diodes.com/datasheets/ap02002.pdf for the latest version.

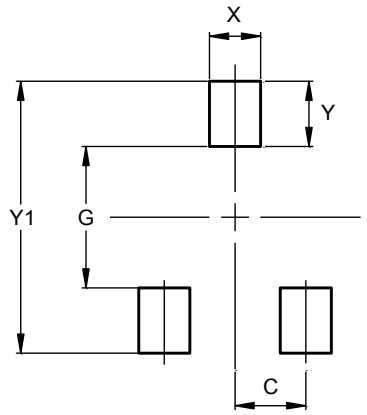

Dimensions	Value (in mm)
C	0.650
G	1.300
X	0.470
Y	0.600
Y1	2.500

© Diodes Incorporated

IMPORTANT NOTICE

DIODES INCORPORATED MAKES NO WARRANTY OF ANY KIND, EXPRESS OR IMPLIED, WITH REGARDS TO THIS DOCUMENT, INCLUDING, BUT NOT LIMITED TO, THE IMPLIED WARRANTIES OF MERCHANTABILITY AND FITNESS FOR A PARTICULAR PURPOSE (AND THEIR EQUIVALENTS UNDER THE LAWS OF ANY JURISDICTION).

Diodes Incorporated and its subsidiaries reserve the right to make modifications, enhancements, improvements, corrections or other changes without further notice to this document and any product described herein. Diodes Incorporated does not assume any liability arising out of the application or use of this document or any product described herein; neither does Diodes Incorporated convey any license under its patent or trademark rights, nor the rights of others. Any Customer or user of this document or products described herein in such applications shall assume all risks of such use and will agree to hold Diodes Incorporated and all the companies whose products are represented on Diodes Incorporated website, harmless against all damages.

Diodes Incorporated does not warrant or accept any liability whatsoever in respect of any products purchased through unauthorized sales channel. Should Customers purchase or use Diodes Incorporated products for any unintended or unauthorized application, Customers shall indemnify and hold Diodes Incorporated and its representatives harmless against all claims, damages, expenses, and attorney fees arising out of, directly or indirectly, any claim of personal injury or death associated with such unintended or unauthorized application.

Products described herein may be covered by one or more United States, international or foreign patents pending. Product names and markings noted herein may also be covered by one or more United States, international or foreign trademarks.

This document is written in English but may be translated into multiple languages for reference. Only the English version of this document is the final and determinative format released by Diodes Incorporated.

LIFE SUPPORT

Diodes Incorporated products are specifically not authorized for use as critical components in life support devices or systems without the express written approval of the Chief Executive Officer of Diodes Incorporated. As used herein:

A. Life support devices or systems are devices or systems which:

1. are intended to implant into the body, or
2. support or sustain life and whose failure to perform when properly used in accordance with instructions for use provided in the labeling can be reasonably expected to result in significant injury to the user.

B. A critical component is any component in a life support device or system whose failure to perform can be reasonably expected to cause the failure of the life support device or to affect its safety or effectiveness.

Customers represent that they have all necessary expertise in the safety and regulatory ramifications of their life support devices or systems, and acknowledge and agree that they are solely responsible for all legal, regulatory and safety-related requirements concerning their products and any use of Diodes Incorporated products in such safety-critical, life support devices or systems, notwithstanding any devices- or systems-related information or support that may be provided by Diodes Incorporated. Further, Customers must fully indemnify Diodes Incorporated and its representatives against any damages arising out of the use of Diodes Incorporated products in such safety-critical, life support devices or systems.

Copyright © 2015, Diodes Incorporated

www.diodes.com