15 Watt AC-DC Enclosed Power Supply

Features:

- 15W Compact Size 65.0 x 55.0 x 25.0mm
- Wide AC & DC Input 85V to 305VAC
- Temperature Range -30°C to +70°C
- Over-voltage Category OVC III
- Output Range: 3.3V - 48VDC
- Low Standby Power <0.5W
- Fully Isolated Pri - Sec >4000Vrms
- Insulation: Class II
- Materials: UL94-V0
- UL/EN62368-1, EN61558, EN60335
- 3 Year Warranty

Description

VTX-212-015-0## AC-DC enclosed caged PSU is in a compact size. It features a wide AC input 85V to 305VAC and a DC input voltage 100 to 430VDC. The converters have been designed with low power consumption, high efficiency, high reliability, reinforced isolation. It offers good EMC performance compliant to IEC/EN61000-4 and CISPR32/EN55032 and meets IEC/EN/UL62368/EN60335/EN61558 standards. The converters are widely used in industrial, power, home appliances, instrumentation, communication, LED lighting and civil applications. For extremely harsh EMC environment, we recommend using the application circuit show in this Datasheet or contact our Technical team for further support.

Selection Guide

Part Number	Power Rating Watts	Output Voltage (VDC)	Output Voltage Adj. Range	Output Current (mA)	Ambient Temp. (°C)	Efficiency Typical	Input Range
VTX-212-015-003	9.9	3.3	2.8~3.6	3000	50°C (70°C @ 60%)	>73%	85 - 305VAC (100 - 430VDC)
VTX-212-015-005	15	5	4.5~5.5	3000			
VTX-212-015-012	15	12	10.2~13.8	1300			
VTX-212-015-015	15	15	13.5~18	1000			
VTX-212-015-024	15	24	21.6~28.8	625			
VTX-212-015-048	15	48	42~54	320			
Note: Other output voltages are available upon request.							

Please contact Vigortronix for any enquiries. Products can be altered to suit custom requirements.
The information contained in this document is subject to change without notice.

Vigortronix, 16 De Havilland Way, Witney, Oxfordshire, OX29 0YG, UK
Tel. +44 (0)1993 777570 Web. www.vigortronix.com, E-mail: sales@vigortronix.com
Vigortronix is a trading name of Vigortronix Limited

15 Watt AC-DC Enclosed Power Supply

Input Specification					
Item	Conditions	Min	Typical	Max	Unit
Input Voltage	AC Input	85	-	305	VAC
	DC Input	100	-	430	VDC
Input Frequency		47	-	63	Hz
Input Current	115VAC	-	-	0.35	A
	230VAC	-	-	0.25	
Inrush Curent	115VAC	-	30	-	
	230VAC	-	50	-	
Leakage Current	277VAC / 50Hz	0.5mA RMS Max			

Output Specification					
Item	Conditions	Min	Typical	Max	Unit
Output Voltage	Output 3.3/5V	-	+/-2	-	%
	Output 12V/15/24V/48V	-	+/-1	-	
Line Regulation	Full Load 3.3/5V	-	+/-1	-	
	Full Load 12V/15/24V/48V	-	+/-0.5	-	
Load Regulation	0% - 100% Load 3.3/5V	-	+/-1	-	
	0% - 100% Load 12V/15/24V/48V	-	+/-0.5	-	
Ripple / Noise	20MHz Bandwidth (Peak to Peak Value)	-	120	150	mV
Stand by Power	230VAC	-	0.3	0.5	W
Temp. Coefficient		-	+/-0.02	-	%/^{O}C
Short Circuit Protection		Hiccup, Continuous, Self-recovery			
Over Current Protection		>110% Load Self-recovery			
Over Voltage Protection		Hiccup, Continuous, Self-recovery			
Minimum Load		0	-	-	%
Hold-up Time	115VAC Input	-	7	-	mS
	230VAC Input	-	48	-	

Please contact Vigortronix for any enquiries. Products can be altered to suit custom requirements.

The information contained in this document is subject to change without notice.

Vigortronix, 16 De Havilland Way, Witney, Oxfordshire, OX29 0YG, UK
Tel. +44 (0)1993 777570 Web. www.vigortronix.com, E-mail: sales@vigortronix.com
Vigortronix is a trading name of Vigortronix Limited

15 Watt AC-DC Enclosed Power Supply

General Specification					
Item	Conditions	Min	Typical	Max	Unit
Dielectric Strength	Input to Output (1Min, 10mA)	4000	-	-	VAC
	Input to Earth (1Min, 10mA)	2000	-	-	
Insulation Resistance	Input to Output (500VDC)	100			M.Ohm
Operating Temperture		-30	-	+70	^{o}C
Storage Temperture		-40	-	+85	
Operating Humidity		20	-	90	%RH
Storage Humidity		-	-	95	
Switching Frequency		-	65	-	KHz
Altitude		-	-	5000	m
Safety Class		CLASS I			
MTBF		>700KHrs @ 25°C (MIL-HDBK-217F)			
Safety Approvals		IEC/UL62368-1, EN61558-1, EN60335-1			
Case Material		Metal (AL5052)			
Dimensions		65.00 x 55.00 x 25.00mm			
Cooling Method		Free air convection			
Weight		90g			

EMC Specification		
Emissions	CE /RE	CISPR32 / EN55032 CLASS B EN55014-1
Immunity	ESD	IEC/EN 61000-4-2 CONTACT +/-6KV EN55014-2
	RS	IEC/EN 61000-4-3 10V/m EN55014-2
	EFT	IEC/EN 61000-4-4
	SURGE	IEC/EN 61000-4-5, EN55014-2
	CS	IEC/EN 61000-4-6 10V/r.m.s. EN55014-2
	Voltage Variation	IEC/EN 61000-4-11, EN55014-2

Please contact Vigortronix for any enquiries. Products can be altered to suit custom requirements.

The information contained in this document is subject to change without notice.

Vigortronix, 16 De Havilland Way, Witney, Oxfordshire, OX29 0YG, UK
Tel. +44 (0)1993 777570 Web. www.vigortronix.com, E-mail: sales@vigortronix.com
Vigortronix is a trading name of Vigortronix Limited

Derating Graphs

Temperature Derating Graph

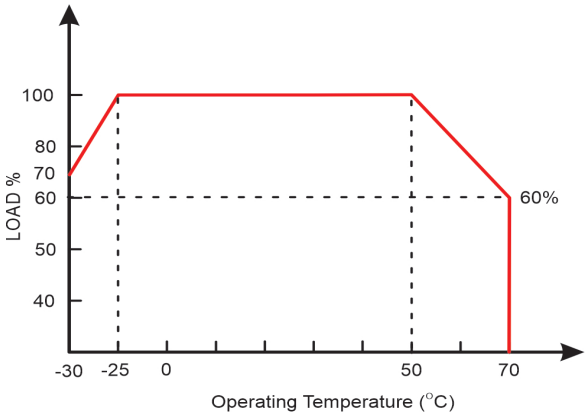

Input Voltage Derating Graph

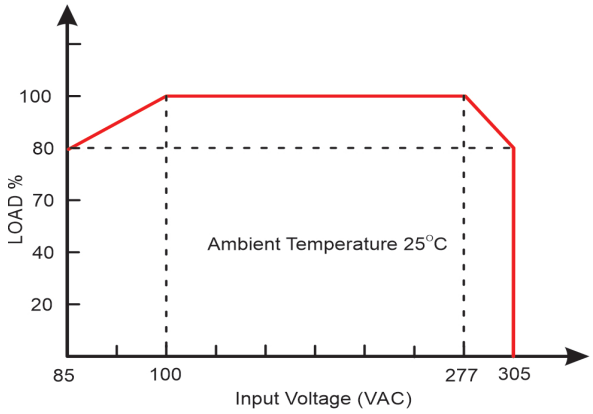

Dimensions

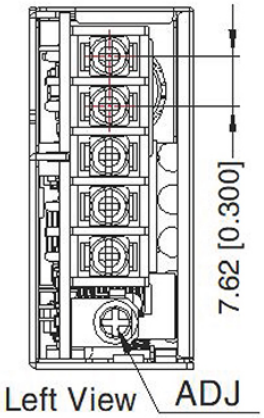

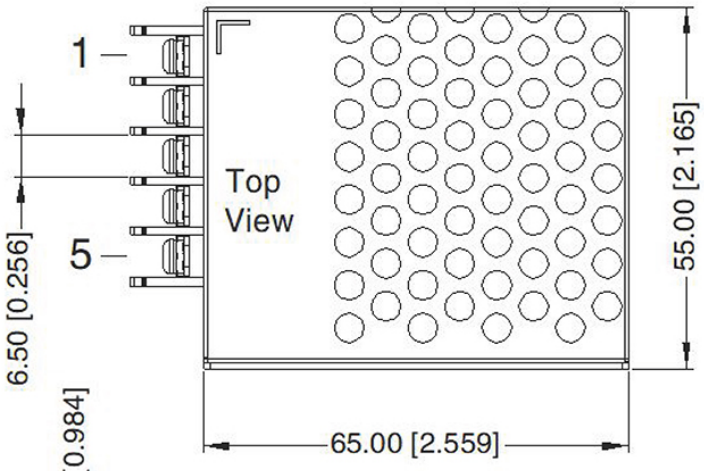

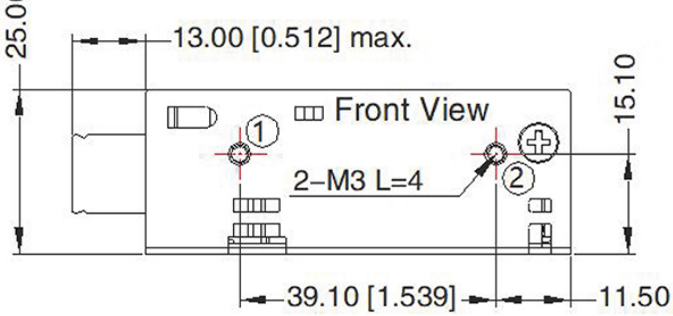

PIN Number	Function
1	AC(L)
2	AC(N)
3	Earth
4	-Vo
5	+Vo

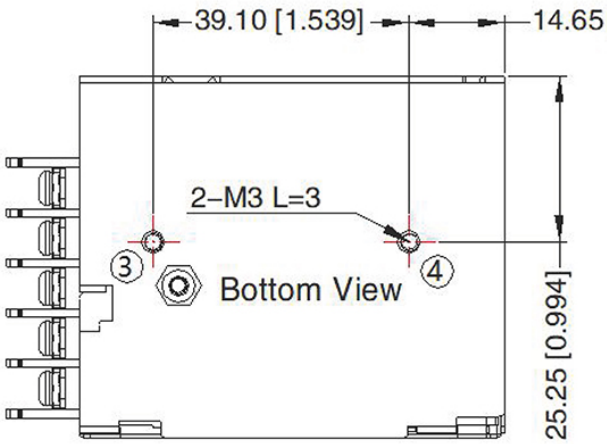

Position	Screw Size	Max Length	Max Torque
1 - 2	M3	4mm	0.4Nm
3 - 4	M3	3mm	0.4Nm

Please contact Vigortronix for any enquiries. Products can be altered to suit custom requirements.
The information contained in this document is subject to change without notice.

Vigortronix, 16 De Havilland Way, Witney, Oxfordshire, OX29 0YG, UK
Tel. +44 (0)1993 777570 Web. www.vigortronix.com, E-mail: sales@vigortronix.com
Vigortronix is a trading name of Vigortronix Limited