SIGN	DATE	DESCRIPTION	APPROVER
1	11.01'05	Standard spec is changed.	Marivn
2	8/07'06	Added VDE and TUV standard	梁仁松
3	2010.03.12	Add the 2p mark	Jacke

THIS IS CAD DRAWING, DO NOT REVISE MANUALLY!!!

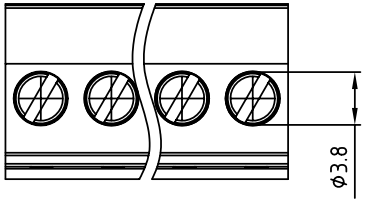

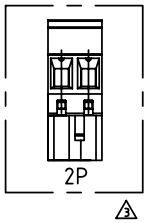

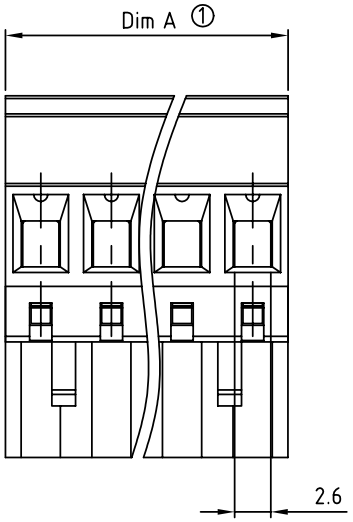

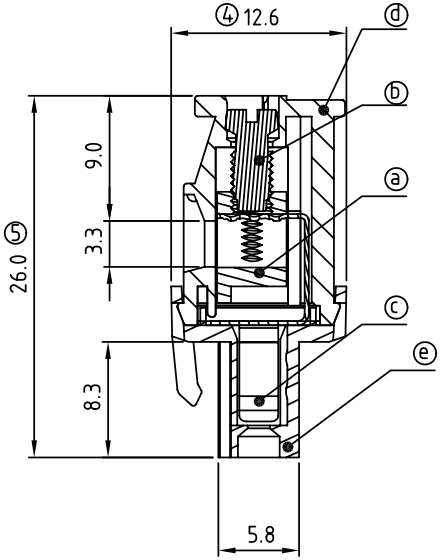

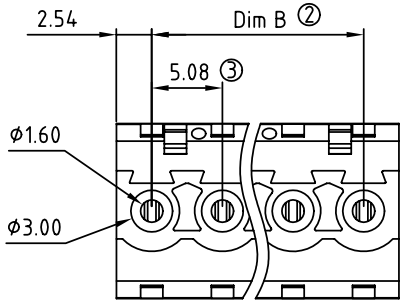

Material

- Item a Clamp: Brass(CuZn) Ni plated
- Item b Terminal screw: Steel Zinc plating "-" slot type
- Item c Female contact: PhBz Tin plated
- Item d Terminal (housing): Thermoplastic (UL94V-0)
- Item e Terminal (cover): Thermoplastic (UL94V-0)

2 1 Electrical cULus/VDE/TUV

- Voltage rating: 300VAC/300VAC/300VAC
- Current rating: 15A/17A/15A
- Wire range: 2.5mm²/0.34-2.5mm²
- Solid wire(AWG): 12-24
- Stranded wire(AWG): 12-24
- Torque: 3.5Lb-In./0.5Nm/0.4Nm
- Screw: M3
- Wire strip length: 6-7mm
- Withstanding Voltage: 1.6KV/2.5KV/2.5KV
- Operating temperature: -40°C to +115°C
- Safety approval: cULus VDE TÜV

TS xx 51 x A xxxx G

02	2 CONTACTS
03	3 CONTACTS
...	...
24	24 CONTACTS

Color

0	Black (RAL9005)
2	Red (RAL3001/D)
3	Orange(RAL2011/P)
4	Yellow(RAL1018/A)
5	Green(RAL6018/T)
6	Blue (RAL5015/A)
8	Grey(RAL7035/D)

0000: "@" Logo
000A: "ANYTEK" Mark
0091: "ANYTEK" Mark
Any special item by customer requst. please contact sales department.

RoHS
Pb<40,000ppm

N = Number of poles
Dim A=Nx5.08
Dim B=(N-1)x5.08

	Dim A	Dim B
2-6p	±0.15	±0.15
7-12p	±0.25	±0.25
13-18p	±0.30	±0.30
19-24p	±0.40	±0.40

ANYTEK

CUSTOMER COPY

ALL RIGHTS RESERVED. REPRODUCTION OR ISSUE TO THIRD PARTIES IN ANY FORM WHATEVER IS NOT PERMITTED WITHOUT WRITTEN AUTHORITY FROM THE PROPRIETOR. PROPERTY OF ANYTEK TECHNOLOGY CO., LTD

TITLE	TS-5.08mm Series(W/latching hooks on the wire entry side)				
PART NO.	TSxx51xAxxxxG			DWG NO.	8TS0101
APPROVED	CHECKED	DESIGNED	DRAWN	CUST NO.	
		Jacke 2010.03.13	Jacke 2010.03.13	UNIT: mm	
				SCALE: NONE	
				SHEET: 01/01	REV.: F

Tolerance	
X.	±0.50
X.X	±0.30
X.XX	±0.10
X°	±1°