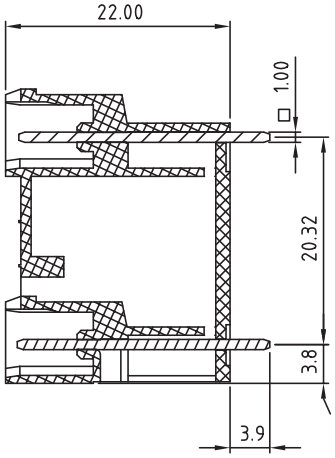

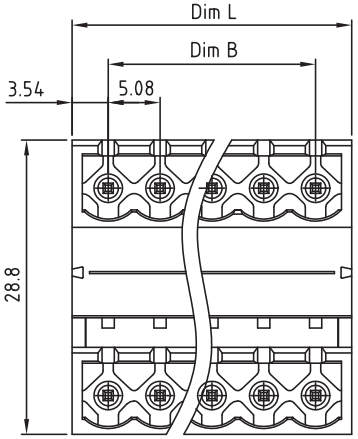

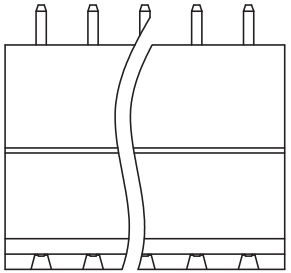

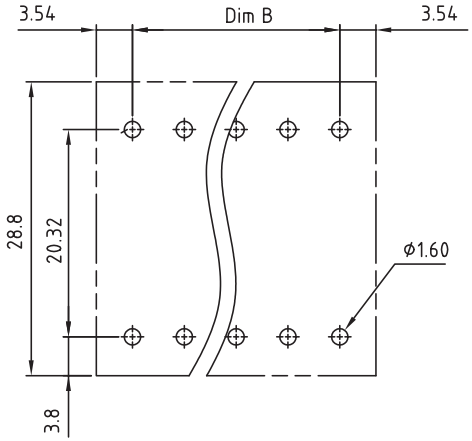

PCB LAYOUT - COMPONENT VIEW

TECHNICAL CHARACTERISTICS

MATERIAL
INSULATOR: PA 66
FLAMMABILITY RATING: UL94-V0
COLOR: GREEN
CONTACT PIN: BRASS (CuZn)
SURFACE OF SOLDER TAIL PLATING: TIN

ENVIRONMENTAL
OPERATING TEMPERATURE: -40 UP TO 105°C
COMPLIANCE: LEAD FREE AND ROHS

ELECTRICAL	UL
CURRENT RATING:	20A
WORKING VOLTAGE:	300VAC
WITHSTANDING VOLTAGE:	1.6KV
CONTACT RESISTANCE:	20 mOhm MAX

STANDARD
CERTIFIED E315414

MECHANICAL
PITCH: 5.08mm

SOLDERING
JEDEC LEAD FREE WAVE SOLDERING PROCESS

PACKAGING
BOX

N=NUMBER OF CONTACTS

DIM		TOL			
		4--12P	14--24P	26--36P	38--48P
Dim L	(N-1)×5.08+7.08	±0.15	±0.25	±0.35	±0.40
Dim B	(N-1)×5.08	±0.15	±0.25	±0.35	±0.40

RoHS Compliant

REV	DATE	FILE	BY
G			
F			
E			
D			
C			
B	07-JUL-15	UPDATE	AK
A	18-JUN-10	PDF	JP

PROJECTION:

APPROVAL: FBr

GENERAL TOLERANCE
.X = +/- 0.2
.XX = +/- 0.15

UNIT: MM
SCALE:
SHEET: 1/2
DRAW: MARVIN

WÜRTH ELEKTRONIK

DESCRIPTION: SERIE 3335 - 5.08MM DOUBLE LEVEL VERTICAL MALE PCB HEADER WITH FLANGES TYPE WR-TBL

WERI PART NO: 691 333 500 0xx

SIZE
A4

Cautions and Warnings:

This electronic component is designed and developed with the intention for use in general electronics equipments.
Before incorporating the components into any equipments in the field such as aerospace, aviation, nuclear control, submarine, transportation, (automotive control, train control, ship control), transportation signal, disaster prevention, medical, public information network etc. where higher safety and reliability are especially required or if there is possibility of direct damage or injury to human body, Wurth Elektronik must be asked for a written approval.
In addition, even electronic component in general electronic equipments, when used in electrical circuits that require high safety, reliability functions or performance, the sufficient reliability evaluation-check for the safety must be performed before by the user before usage.

RoHS Compliant

REV	DATE	FILE	BY
G			
F			
E			
D			
C			
B			
A	10-SEP-14	PDF	QL

PROJECTION:

APPROVAL: JC

GENERAL TOLERANCE
.X = +/_ 0.2
.XX = +/_ 0.15

UNIT: MM
SCALE:
SHEET: 2/2
DRAW: QL

WÜRTH ELEKTRONIK

DESCRIPTION: DISCLAIMER

WERI PART NO: DISCLAIMER

SIZE
A4