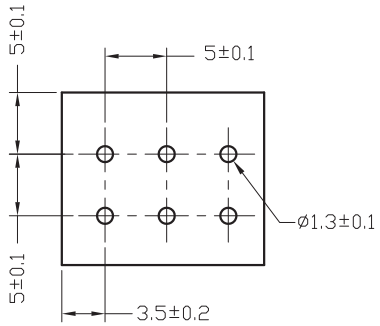

RECOMMENDED PCB LAYOUT - COMPONENT VIEW

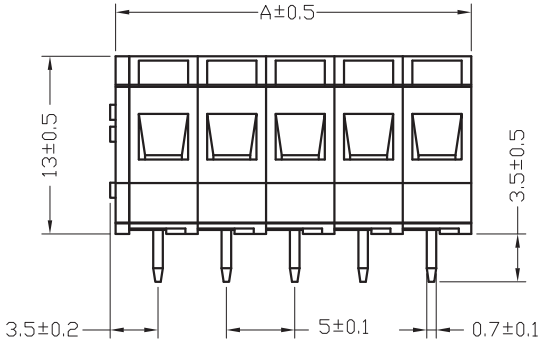

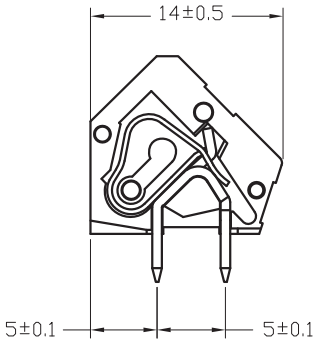

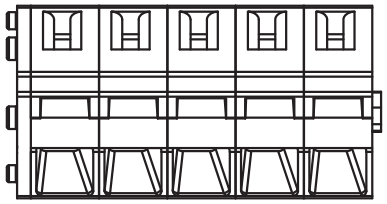

Pitch : 5.00mm			
Poles	A(mm)	Poles	A(mm)
1	6.00	15	76.00
2	11.00	16	81.00
3	16.00	17	86.00
4	21.00	18	91.00
5	26.00	19	96.00
6	31.00	20	101.00
7	36.00	21	106.00
8	41.00	22	111.00
9	46.00	23	116.00
10	51.00	24	121.00
11	56.00		
12	61.00		
13	66.00		
14	71.00		

TECHNICAL CHARACTERISTICS

MATERIAL
INSULATOR: PA 66
FLAMMABILITY RATING: UL94-V0
COLOR: GREY
WIRE GUARD: STAINLESS STEEL
CONTACT PIN: BRASS (CuZn)
SOLDER TAIL PLATING: TIN

ENVIRONMENTAL
OPERATING TEMPERATURE: -40 UP TO 115°C
COMPLIANCE: LEAD FREE AND ROHS

ELECTRICAL	UL
CURRENT RATING:	15 A
WORKING VOLTAGE:	300 VAC
WITHSTANDING VOLTAGE:	1.6 KV
CONTACT RESISTANCE:	20 mOhm MAX

STANDARD
cULus CERTIFIED E315414

MECHANICAL

SOLID WIRE:	28-12 AWG / 0.08-3.31 MM²
STRANDED WIRE:	28-12 AWG / 0.08-3.31 MM²
WIRE STRIP LENGTH:	5-6 MM

MECHANICAL:
PITCH: 5.0MM

SOLDERING
JEDEC LEAD FREE WAVE SOLDERING

PACKAGING
BOX

RoHS Compliant

REV	DATE	FILE	BY
G			
F			
E			
D	01-FEB-16	MECHANICAL	AK
C	21-SEP-15	MECHANICAL	AK
B	24-SEP-13	DWG REVIEW	QL
A	02-JUL-12	PDF	GG

PROJECTION:

APPROVAL: FBr

GENERAL TOLERANCE
.X = +/_ 0.2
.XX = +/_ 0.15

UNIT: MM
SCALE:
SHEET: 1/2
DRAW:

WÜRTH ELEKTRONIK

DESCRIPTION: SERIE 413 B - 5.00 MM SCREWLESS 45° ENTRY - WR-TBL

WERI PART NO: 691 413 720 0xx B

SIZE
A4

Cautions and Warnings:

This electronic component is designed and developed with the intention for use in general electronics equipments.
Before incorporating the components into any equipments in the field such as aerospace, aviation, nuclear control, submarine, transportation, (automotive control, train control, ship control), transportation signal, disaster prevention, medical, public information network etc. where higher safety and reliability are especially required or if there is possibility of direct damage or injury to human body, Wurth Elektronik must be asked for a written approval.
In addition, even electronic component in general electronic equipments, when used in electrical circuits that require high safety, reliability functions or performance, the sufficient reliability evaluation-check for the safety must be performed before by the user before usage.

RoHS Compliant

REV	DATE	FILE	BY
G			
F			
E			
D			
C			
B			
A	10-SEP-14	PDF	QL

PROJECTION:

APPROVAL: JC

GENERAL TOLERANCE
.X = +/_ 0.2
.XX = +/_ 0.15

UNIT: MM
SCALE:
SHEET: 2/2
DRAW: QL

WÜRTH ELEKTRONIK

DESCRIPTION: DISCLAIMER

WERI PART NO: DISCLAIMER

SIZE
A4