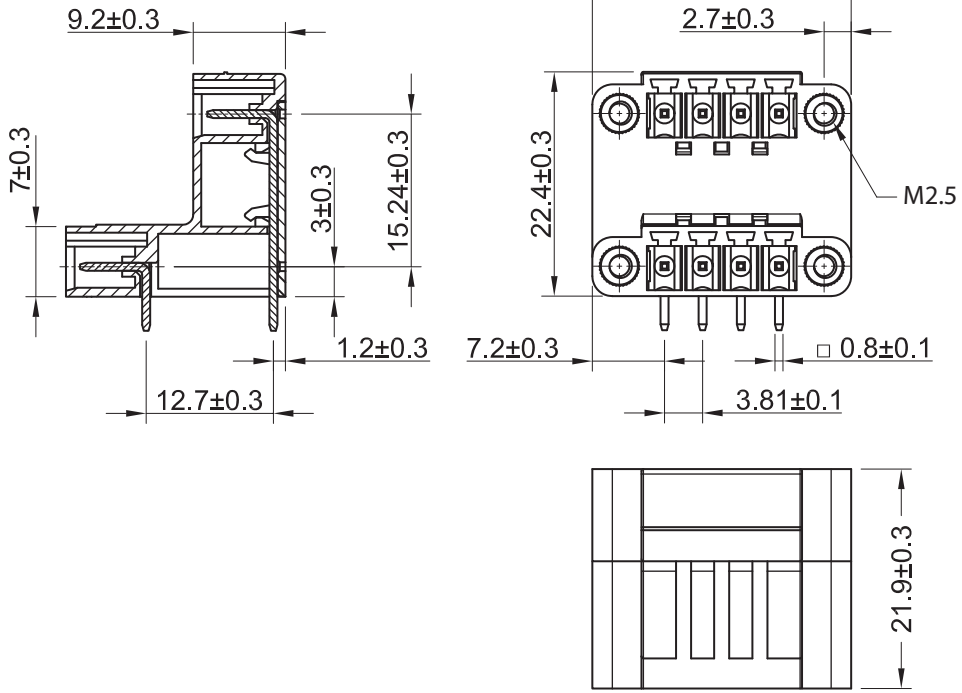

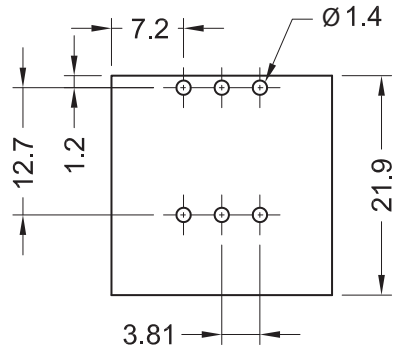

RECOMMENDED PCB LAYOUT - COMPONENT VIEW

TECHNICAL CHARACTERISTICS

MATERIAL
INSULATOR: PA 66
FLAMABILITY RATING: UL94-V0
COLOR: LIGHT GREEN
CONTACT MATERIAL: BRASS (CuZn)
PLATING: TIN PLATED

ENVIRONMENTAL
OPERATING TEMPERATURE: -40 UP TO 105°C
COMPLIANCE: LEAD FREE AND ROHS

ELECTRICAL	UL
CURRENT RATING:	10A
WORKING VOLTAGE:	300VAC
WITHSTANDING VOLTAGE:	2000 V AC/MN
INSULATION RESISTANCE:	>2000M OHM
CONTACT RESISTANCE:	20 mOhm MAX

STANDARD
CERTIFIED E315414

SCREW: M2.5
PITCH: 3.81mm

SOLDERING
JEDEC LEAD FREE WAVE SOLDERING PROCESS

PACKAGING
BOX

DIMENSION

PINS	A
4	18.21
6	22.02
8	25.83
10	29.64
12	33.45
14	37.26
16	41.07

RoHS Compliant

REV	DATE	FILE	BY
G			
F			
E			
D			
C	07-JUL-15	UPDATE	AK
B	15-MAY-13	UL	JC
A	30-JAN-13	PDF	QL

PROJECTION:

APPROVAL: FBr

GENERAL TOLERANCE
.X = +/_ 0.2
.XX = +/_ 0.15

UNIT: MM
SCALE:
SHEET: 1/2
DRAW: QL

WÜRTH ELEKTRONIK

DESCRIPTION: SERIE 357B - 3.81MM DOUBLE LEVEL HORIZONTAL MALE PCB HEADER WITH FLANGES TYPE WR - TBL

WERI PART NO: 691 357 310 0xxB

SIZE
A4

Cautions and Warnings:

This electronic component is designed and developed with the intention for use in general electronics equipments.
Before incorporating the components into any equipments in the field such as aerospace, aviation, nuclear control, submarine, transportation, (automotive control, train control, ship control), transportation signal, disaster prevention, medical, public information network etc. where higher safety and reliability are especially required or if there is possibility of direct damage or injury to human body, Wurth Elektronik must be asked for a written approval.
In addition, even electronic component in general electronic equipments, when used in electrical circuits that require high safety, reliability functions or performance, the sufficient reliability evaluation-check for the safety must be performed before by the user before usage.

RoHS Compliant

REV	DATE	FILE	BY
G			
F			
E			
D			
C			
B			
A	10-SEP-14	PDF	QL

PROJECTION:

APPROVAL: JC

GENERAL TOLERANCE
.X = +/_ 0.2
.XX = +/_ 0.15

UNIT: MM
SCALE:
SHEET: 2/2
DRAW: QL

WÜRTH ELEKTRONIK

DESCRIPTION: DISCLAIMER

WERI PART NO: DISCLAIMER

SIZE
A4