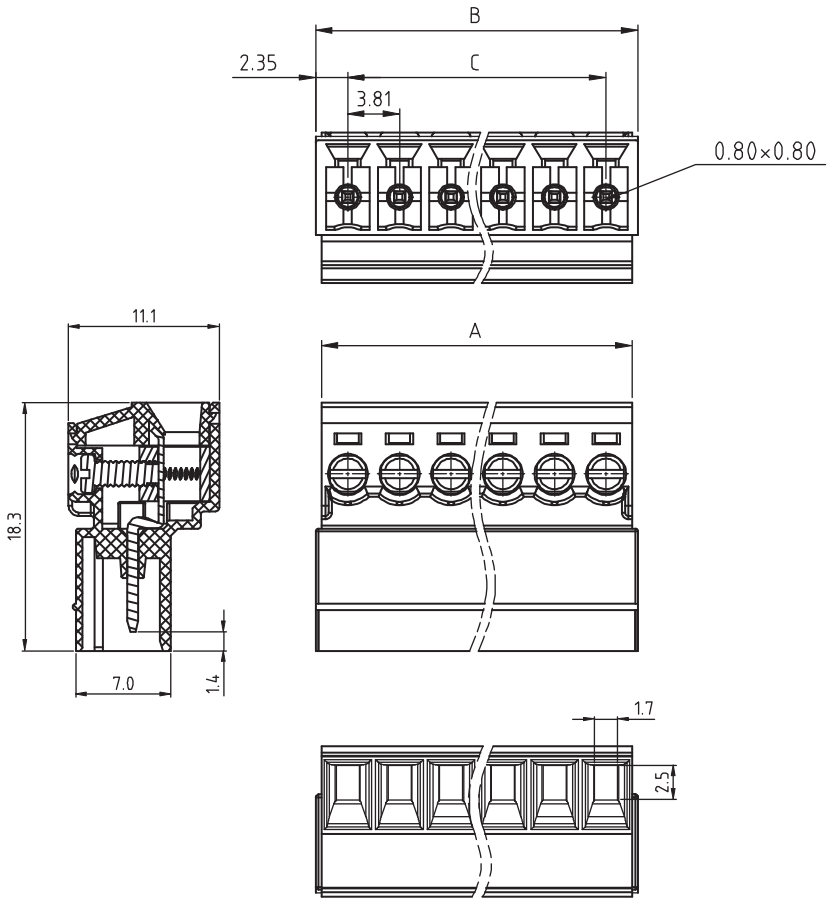


TECHNICAL CHARACTERISTICS

MATERIAL
INSULATOR: PA 66
FLAMMABILITY RATING: UL94-V0
COLOR: GREEN
CONTACT MATERIAL: BRASS
CONTACT PLATING: TIN
CONTACT TYPE: STAMPED
TERMINAL SCREW: STEEL ZINC PLATING

ENVIRONMENTAL
OPERATING TEMPERATURE: -40 UP TO 115°C
COMPLIANCE: LEAD FREE AND ROHS

| | |
|---|---|
| ELECTRICAL | cULus |
| CURRENT RATING: | 8A |
| WORKING VOLTAGE: | 300VAC |
| WITHSTANDING VOLTAGE: | 1.6KV |
| CONTACT RESISTANCE: | 20 mOhm max |

STANDARD
cULus CERTIFIED E315414

MECHANICAL

| | |
|---|---|
| SOLID WIRE: | 30-14 AWG / 0.051-2.08 MM² |
| STRANDED WIRE: | 30-14 AWG / 0.051-2.08 MM² |
| TORQUE: | 2.6Lb-In / 0.29Nm |

WIRE STRIPE LENGTH: 7 MM
SCREW: M2.0
PITCH: 3.81 MM

SOLDERING
JEDEC LEAD FREE WAVE SOLDERING PROCESS

PACKAGING
BOX

DIMENSION
A = 3.81 x NB PINS
B = (3.81 x NB PINS) +0.88
C = 3.81 x (NB PINS-1)

RoHS Compliant

| REV | DATE | FILE | BY |
|---|---|---|---|
| G | | | |
| F | | | |
| E | | | |
| D | | | |
| C | | | |
| B | | | |
| A | 11-JUN-15 | PDF | AK |

PROJECTION:

APPROVAL: FBr

GENERAL TOLERANCE
.X = +/_ 0.2
.XX = +/_ 0.15

UNIT: MM
SCALE:
SHEET: 1/2
DRAW: AK

WÜRTH ELEKTRONIK

**DESCRIPTION: SERIE 3483 - 3.81 MM REVERSED PLUG VERTICAL ENTRY**

**WERI PART NO: 691 348 300 0xx**

SIZE
**A4**

## Cautions and Warnings:

This electronic component is designed and developed with the intention for use in general electronics equipments.
Before incorporating the components into any equipments in the field such as aerospace, aviation, nuclear control, submarine, transportation, (automotive control, train control, ship control), transportation signal, disaster prevention, medical, public information network etc. where higher safety and reliability are especially required or if there is possibility of direct damage or injury to human body, Wurth Elektronik must be asked for a written approval.
In addition, even electronic component in general electronic equipments, when used in electrical circuits that require high safety, reliability functions or performance, the sufficient reliability evaluation-check for the safety must be performed before by the user before usage.

RoHS Compliant

| REV | DATE | FILE | BY |
|---|---|---|---|
| G | | | |
| F | | | |
| E | | | |
| D | | | |
| C | | | |
| B | | | |
| A | 10-SEP-14 | PDF | QL |

PROJECTION:

APPROVAL: JC

GENERAL TOLERANCE
.X = +/_ 0.2
.XX = +/_ 0.15

UNIT: MM
SCALE:
SHEET: 2/2
DRAW: QL

WÜRTH ELEKTRONIK

DESCRIPTION: DISCLAIMER

WERI PART NO: DISCLAIMER

SIZE
A4