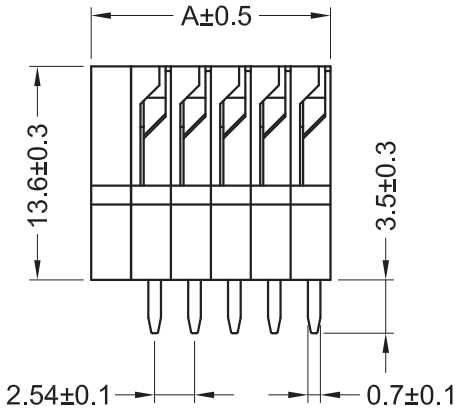

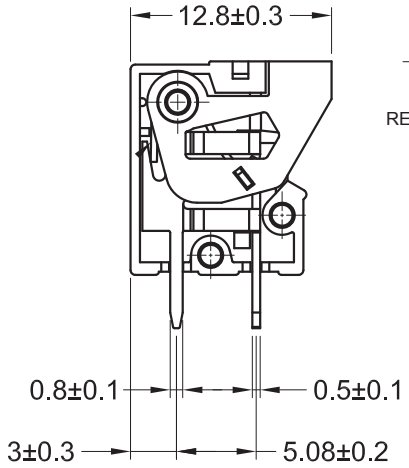

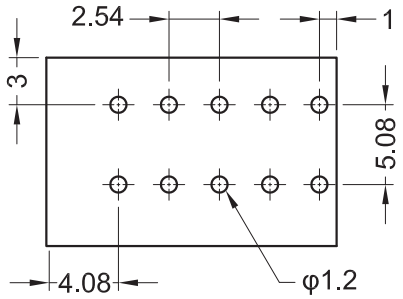

RECOMMENDED PCB LAYOUT - COMPONENT VIEW

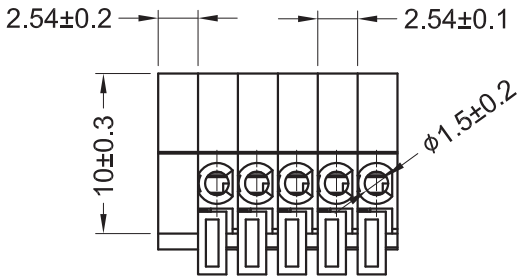

TECHNICAL CHARACTERISTICS

MATERIAL
INSULATOR: PA 66
FLAMMABILITY RATING: UL94-V0
COLOR: GREEN/ORANGE
WIRE GUARD: STAINLESS STEEL
CONTACT: BRASS
SOLDER TAIL PLATING: TIN

ENVIRONMENTAL
OPERATING TEMPERATURE: -40°C UP TO 115°C
COMPLIANCE: LEAD FREE AND ROHS

ELECTRICAL	cULus
CURRENT RATING:	6A
WORKING VOLTAGE:	150 VAC
WITHSTANDING VOLTAGE:	2.0 KV
CONTACT RESISTANCE:	20 mΩ max

STANDARD
cULus CERTIFIED E315414

MECHANICAL

SOLID WIRE:	26-20 AWG / 0.129-0.518 MM²
STRANDED WIRE:	26-20 AWG / 0.129-0.518 MM²

WIRE STRIPE LENGTH: 9-10 MM
PITCH: 2.54 MM

SOLDERING:
JEDEC LEAD FREE WAVE SOLDERING PROCESS

PACKAGING
BOX

DIMENSION
A = 2.54 x NB PINS + 2.54

RoHS Compliant

REV	DATE	FILE	BY
G			
F			
E			
D	09-JUN-15	LAYOUT REVIEW	AK
C	12-NOV-14	GENERAL UPDATE	AS
B	29-JUL-13	DWG REVIEW	QL
A	02-JUL-12	PDF	GG

PROJECTION:

APPROVAL: FBr

GENERAL TOLERANCE
.X = +/_ 0.2
.XX = +/_ 0.15

UNIT: MM
SCALE:
SHEET: 1/2
DRAW: AS

WÜRTH ELEKTRONIK

DESCRIPTION: SERIE 4039 B - 2.54MM SCREWLESS VERTICAL ENTRY - WR-TBL

WERI PART NO: 691 403 900 0xx B

SIZE
A4

Cautions and Warnings:

This electronic component is designed and developed with the intention for use in general electronics equipments.
Before incorporating the components into any equipments in the field such as aerospace, aviation, nuclear control, submarine, transportation, (automotive control, train control, ship control), transportation signal, disaster prevention, medical, public information network etc. where higher safety and reliability are especially required or if there is possibility of direct damage or injury to human body, Wurth Elektronik must be asked for a written approval.
In addition, even electronic component in general electronic equipments, when used in electrical circuits that require high safety, reliability functions or performance, the sufficient reliability evaluation-check for the safety must be performed before by the user before usage.

RoHS Compliant							
G				PROJECTION:	GENERAL TOLERANCE		
F					.X = +/_ 0.2		
E					.XX = +/_ 0.15		
D							
C				APPROVAL: JC	UNIT: MM	DESCRIPTION: DISCLAIMER	SIZE
B					SCALE:		
A	10-SEP-14	PDF	QL		SHEET: 2/2	WERI PART NO: DISCLAIMER	A4
REV	DATE	FILE	BY		DRAW: QL		

WÜRTH ELEKTRONIK