STGIPQ4C60T-HZ

Datasheet

SLLIMM nano - 2nd series IPM, 3-phase inverter, 6 A, 600 V short-circuit rugged IGBT

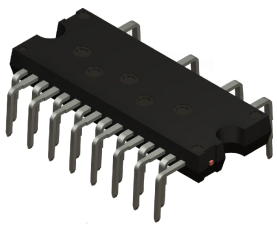

N2DIP-26L type Z

Features

- IPM 6 A, 600 V, 3-phase IGBT inverter bridge including 3 control ICs for gate driving and freewheeling diodes
- 3.3 V, 5 V, 15 V TTL/CMOS input comparators with hysteresis and pull-down/pull-up resistors
- Internal bootstrap diode
- Optimized for low electromagnetic interference
- Undervoltage lockout
- Short-circuit rugged TFS IGBT
- Shutdown function
- Interlocking function
- Op-amp for advanced current sensing
- Comparator for fault protection against overcurrent
- Isolation ratings of 1500 V_{rms}/min.
- NTC (UL 1434 CA 2 and 4)
- Up to ±2 kV ESD protection (HBM C = 100 pF, R = 1.5 kΩ)
- UL recognition: UL 1557, file E81734

Applications

- 3-phase inverters for motor drives
- Dish washers
- Washing machines
- Refrigerator compressors
- Fans

Product status link
STGIPQ4C60T-HZ

Product summary	
Order code	STGIPQ4C60T-HZ
Marking	GIPQ4C60T-HZ
Package	N2DIP-26L type Z
Packing	Tube

Description

This second series of SLLIMM (small low-loss intelligent molded module) nano provides a compact, high-performance AC motor drive in a simple, rugged design. It is composed of six improved short-circuit rugged trench gate fieldstop IGBTs with freewheeling diodes and three half-bridge HVICs for gate driving, providing low electromagnetic interference (EMI) characteristics with optimized switching speed. The package is designed to allow a better and more easily screwed-on heat sink, and is optimized for thermal performance and compactness in built-in motor applications or other low power applications where assembly space is limited. This IPM includes a completely uncommitted operational amplifier and a comparator that can be used to design a fast and efficient protection circuit. SLLIMM is a trademark of STMicroelectronics.

1 Internal schematic diagram and pin configuration

Figure 1. Internal schematic diagram

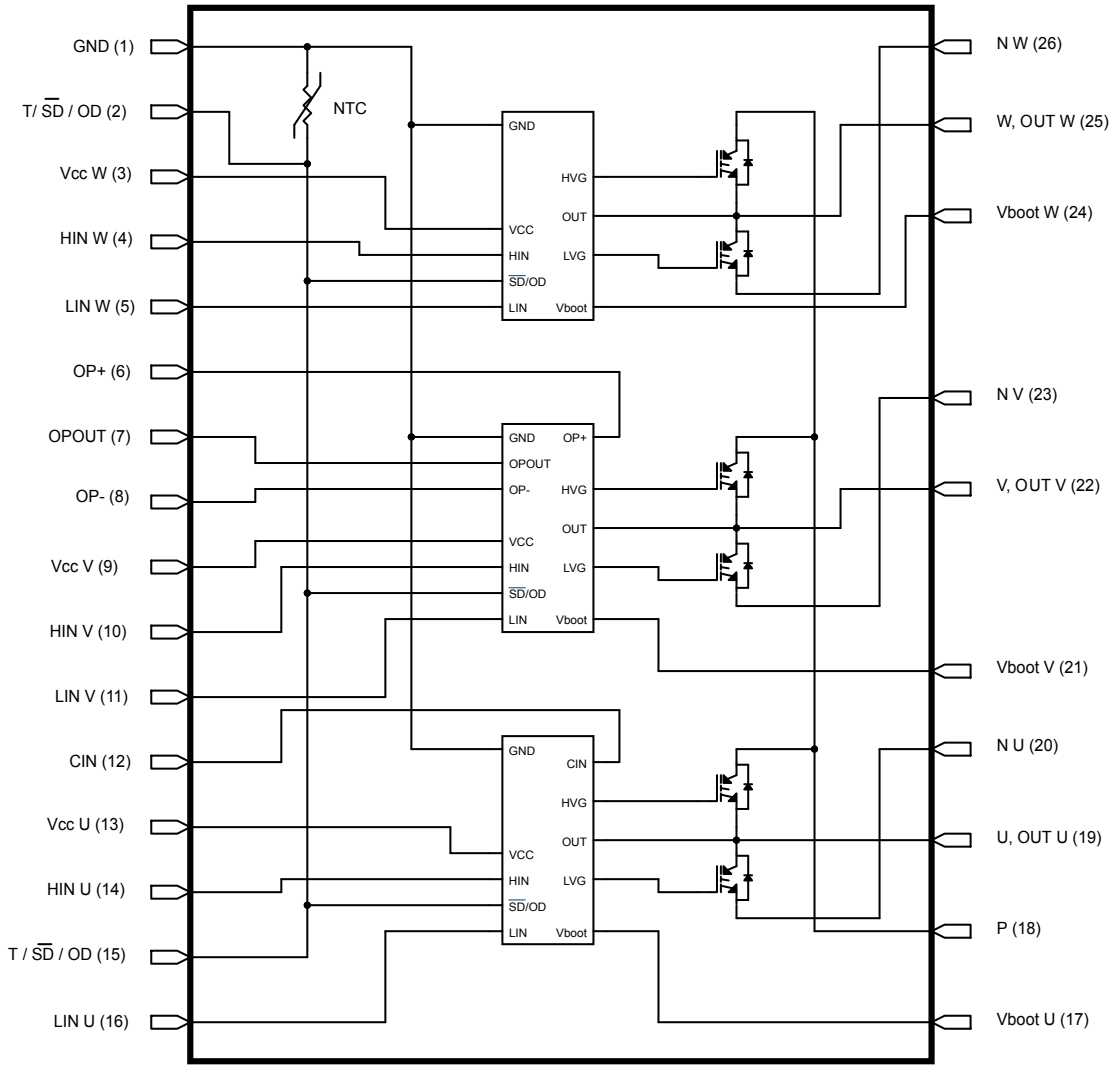

Table 1. Pin description

Pin	Symbol	Description
1	GND	Ground
2	T/$\overline{SD}$/ OD	NTC thermistor terminal/shutdown logic input (active low)/open-drain (comparator output)
3	V_{CC} W	Low-voltage power supply W phase
4	HIN W	High-side logic input for W phase
5	LIN W	Low-side logic input for W phase
6	OP+	Op-amp non-inverting input
7	OP_{OUT}	Op-amp output
8	OP-	Op-amp inverting input
9	V_{CC} V	Low-voltage power supply V phase
10	HIN V	High-side logic input for V phase
11	LIN V	Low-side logic input for V phase
12	CIN	Comparator input
13	V_{CC} U	Low-voltage power supply for V phase
14	HIN U	High-side logic input for V phase
15	T/$\overline{SD}$/ OD	NTC thermistor terminal/shutdown logic input (active low)/open-drain (comparator output)
16	LIN U	Low-side logic input for U phase
17	V_{boot} U	Bootstrap voltage for U phase
18	P	Positive DC input
19	U, OUT_U	U phase output
20	N_U	Negative DC input for U phase
21	V_{boot} V	Bootstrap voltage for V phase
22	V, OUT_V	V phase output
23	N_V	Negative DC input for V phase
24	V_{boot} W	Bootstrap voltage for W phase
25	W, OUT_W	W phase output
26	N_W	Negative DC input for W phase

Figure 2. Pin layout (top view) - N2DIP-26L type Z

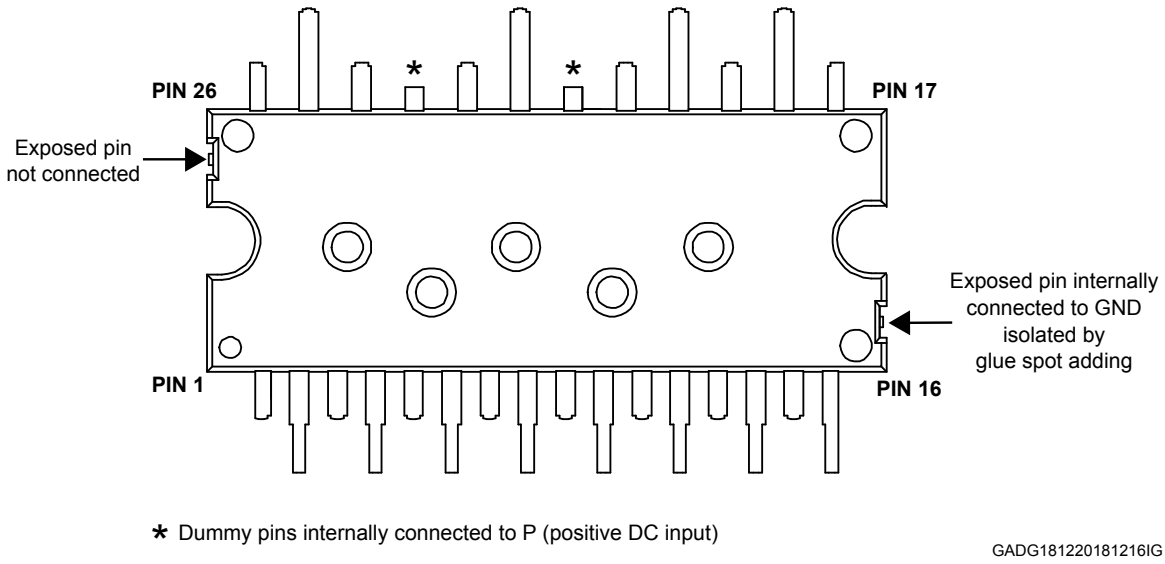

2 Electrical ratings

T_J = 25 °C unless otherwise specified.

2.1 Absolute maximum ratings

Table 2. Inverter part

Symbol	Parameter	Value	Unit
V_{CES}	Collector-emitter voltage for each IGBT (V_{IN}[1] = 0)	600	V
I_C	Continuous collector current for each IGBT (T_C = 25 °C)	6	A
I_{CP}[2]	Peak collector current for each IGBT (less than 1 ms)	9	A
P_{TOT}	Total power dissipation for each IGBT (T_C = 25 °C)	12.5	W
t_{SCW}	Short-circuit withstand time (V_{CE} = 300 V, T_J = 125 °C, V_{CC} = V_{boot} = 15 V, V_{IN}[1] = 0 to 5 V)	5	µs

1. *Applied among HIN_x, LIN_x and GND for x = U, V, W*
2. *Pulse width limited by maximum junction temperature.*

Table 3. Control part

Symbol	Parameter	Min.	Max.	Unit
V_{CC}	Low voltage power supply	-0.3	21	V
V_{boot}	Bootstrap voltage	-0.3	620	V
V_{OUT}	Output voltage applied among OUT_U, OUT_V, OUT_W - GND	V_{boot} - 21	V_{boot} + 0.3	V
V_{CIN}	Comparator input voltage	-0.3	V_{CC} + 0.3	V
V_{op+}	Op-amp non-inverting input	-0.3	V_{CC} + 0.3	V
V_{op-}	Op-amp inverting input	-0.3	V_{CC} + 0.3	V
V_{IN}	Logic input voltage applied among HINx, LINx and GND	-0.3	15	V
$V_{T/\overline{SD}/OD}$	Open-drain voltage	-0.3	15	V
dV_{out}/dt	Allowed output slew rate		50	V/ns

Table 4. Total system

Symbol	Parameter	Value	Unit
V_{ISO}	Isolation withstand voltage applied to each pin and heat sink plate (AC voltage, t = 60 s)	1500	V_{rms}
T_J	Power chip operating junction temperature range	-40 to 150	°C
T_C	Module case operation temperature range	-40 to 125	°C

2.1.1 Thermal data

Table 5. Thermal data

Symbol	Parameter	Value	Unit
R_{thJC}	Thermal resistance, junction-to-case single IGBT	10	°C/W
	Thermal resistance, junction-to-case single diode	15	

3 Electrical characteristics

T_J = 25 °C unless otherwise specified.

3.1 Inverter part

Table 6. Static

Symbol	Parameter	Test conditions	Min.	Typ.	Max.	Unit
I_{CES}	Collector cut-off current (V_{IN}(1) = 0 “logic state”)	V_{CE} = 550 V, V_{CC} = V_{Boot} = 15 V	-		250	µA
$V_{CE(sat)}$	Collector-emitter saturation voltage	V_{CC} = V_{boot} = 15 V, V_{IN}(1) = 0 to 5 V, I_C = 1 A	-	1.20	1.36	V
		V_{CC} = V_{boot} = 15 V, V_{IN}(1) = 0 to 5 V, I_C = 3 A	-	1.6	1.8	
		V_{CC} = V_{boot} = 15 V, V_{IN}(1) = 0 to 5 V, I_C = 4 A	-	1.79	2.00	
V_F	Diode forward voltage	V_{IN}(1) = 0 “logic state”, I_C = 3 A	-	1.70	1.95	V

1. *Applied among HIN_x, LIN_x and GND for x = U, V, W*

Table 7. Inductive load switching time and energy

Symbol	Parameter	Test conditions	Min.	Typ.	Max.	Unit
t_{on}(1)	Turn-on time	V_{DD} = 300 V,V_{CC} = V_{boot} = 15 V, V_{IN}(2) = 0 to 5 V, I_C = 4 A (see Figure 4. Switching time definition)	-	238	-	ns
$t_{c(on)}$(1)	Crossover time (on)		-	102	-	ns
t_{off}(1)	Turn-off time		-	736	-	ns
$t_{c(off)}$(1)	Crossover time (off)		-	133	-	ns
t_{rr}	Reverse recovery time		-	320	-	ns
E_{on}	Turn-on switching energy		-	78	-	µJ
E_{off}	Turn-off switching energy		-	67	-	µJ

1. *t_{on} and t_{off} include the propagation delay times of the internal drive. $t_{c(on)}$ and $t_{c(off)}$ are the switching times of IGBT itself under the internally given gate driving conditions.*
2. *Applied among HIN_x, LIN_x and GND for x = U, V, W.*

Figure 3. Switching time test circuit

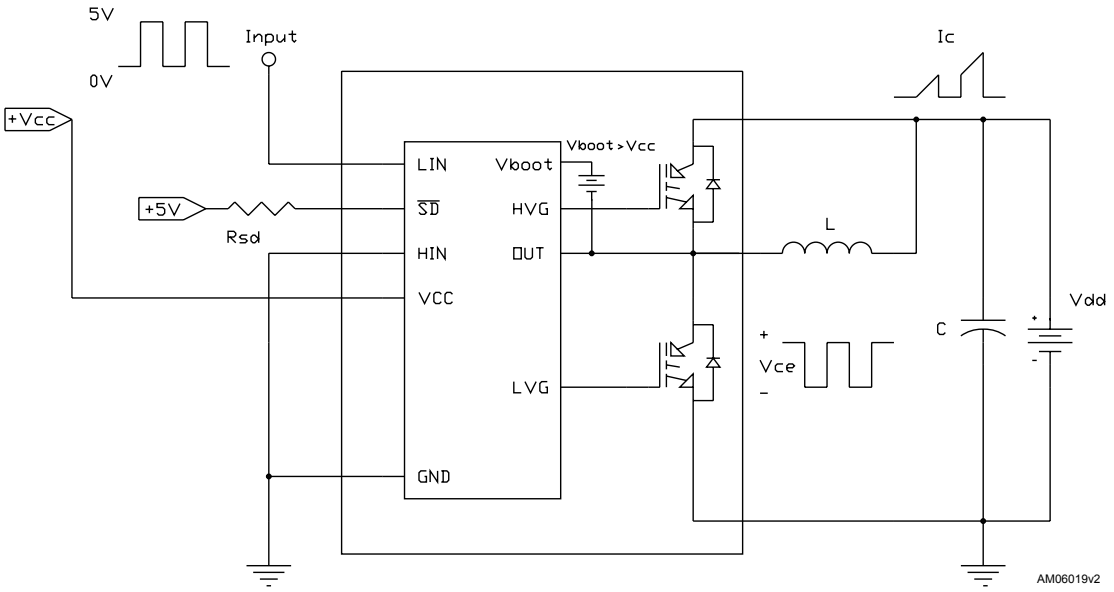

Figure 4. Switching time definition

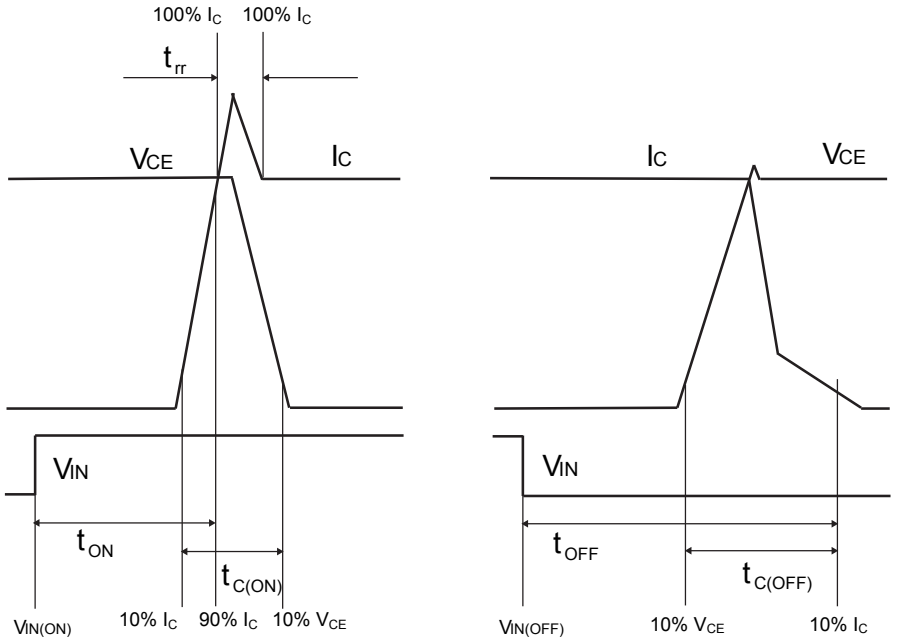

3.2 Control part

(V_{CC} = 15 V unless otherwise specified)

Table 8. Low-voltage power supply

Symbol	Parameter	Test conditions	Min.	Typ.	Max.	Unit
V_{CC_hys}	V_{CC} UV hysteresis		1.2	1.5	1.8	V
V_{CC_thON}	V_{CC} UV turn-ON threshold		11.5	12	12.5	V
V_{CC_thOFF}	V_{CC} UV turn-OFF threshold		10	10.5	11	V
I_{qccu}	Undervoltage quiescent supply current	V_{CC} = 10 V, $V_{T/\overline{SD}/OD}$ = 5 V, LIN = HIN = CIN = 0 V			150	µA
I_{qcc}	Quiescent current	V_{CC} = 10 V, $V_{T/\overline{SD}/OD}$ = 5 V, LIN = HIN = CIN = 0 V			1	mA
V_{ref}	Internal comparator (CIN) reference voltage		0.51	0.54	0.56	V

Table 9. Bootstrapped voltage

Symbol	Parameter	Test conditions	Min.	Typ.	Max.	Unit
V_{BS_hys}	V_{BS} UV hysteresis		1.2	1.5	1.8	V
V_{BS_thON}	V_{BS} UV turn-ON threshold		11.1	11.5	12.1	V
V_{BS_thOFF}	V_{BS} UV turn-OFF threshold		9.8	10	10.6	V
I_{QBSU}	Undervoltage V_{BS} quiescent current	V_{BS} < 9 V, $V_{T/\overline{SD}/OD}$ = 5 V, LIN = 0 V and HIN = 5 V, CIN = 0 V		70	110	µA
I_{QBS}	V_{BS} quiescent current	V_{BS} = 15 V, $V_{T/\overline{SD}/OD}$ = 5 V, LIN = 0 V and HIN = 5 V, CIN = 0 V		150	210	µA
$R_{DS(on)}$	Bootstrap driver on-resistance	LVG ON		120		Ω

Table 10. Logic inputs

Symbol	Parameter	Test conditions	Min.	Typ.	Max.	Unit
V_{il}	Low logic level voltage				0.8	V
V_{ih}	High logic level voltage		2.25			V
I_{HINh}	HIN logic “1” input bias current	HIN = 15 V	20	40	100	µA
I_{HINl}	HIN logic “0” input bias current	HIN = 0 V			1	µA
I_{LINl}	LIN logic “0” input bias current	LIN = 0 V			1	µA
I_{LINh}	LIN logic “1” input bias current	LIN = 15 V	20	40	100	µA
I_{SDh}	$\overline{SD}$ logic “0” input bias current	$\overline{SD}$ = 15 V	210	350	477	µA
I_{SDl}	$\overline{SD}$ logic “1” input bias current	$\overline{SD}$ = 0 V			3	µA
Dt	Dead time	See Figure 9. Dead time and interlocking waveform definitions		180		ns

Table 11. Op-amp characteristics

Symbol	Parameter	Test conditions	Min.	Typ.	Max.	Unit
V_{io}	Input offset voltage	V_{ic} = 0 V, V_o = 7.5 V			6	mV
I_{io}	Input offset current			4	40	nA
I_{ib}	Input bias current[1]			100	200	nA
V_{OL}	Low level output voltage	R_L = 10 kΩ to V_{CC}		75	150	mV
V_{OH}	High level output voltage	R_L= 10 kΩ to GND	14	14.7		V
I_o	Output short-circuit current	Source, V_{id} = + 1 V; V_o = 0 V	16	30		mA
		Sink, V_{id} = -1 V; V_o = V_{CC}	50	80		mA
SR	Slew rate	V_i = 1 - 4 V; C_L = 100 pF; unity gain	2.5	3.8		V/µs
GBWP	Gain bandwidth product	V_o = 7.5 V	8	12		MHz
A_{vd}	Large signal voltage gain	R_L = 2 kΩ	70	85		dB
SVR	Supply voltage rejection ratio	vs V_{CC}	60	75		dB
CMRR	Common mode rejection ratio		55	70		dB

1. *The direction of input current is out of the IC.*

Table 12. Sense comparator characteristics

Symbol	Parameter	Test conditions	Min.	Typ.	Max.	Unit
I_{ib}	Input bias current	V_{CIN} = 1 V	-		1	µA
V_{od}	Open-drain low level output voltage	I_{od} = 3 mA	-		0.5	V
R_{ON_OD}	Open-drain low level output	I_{od} = 3 mA	-	166		Ω
R_{PD_SD}	$\overline{SD}$ pull-down resistor[1]		-	125		kΩ
t_{d_comp}	Comparator delay	$V_{T/\overline{SD}/OD}$ pulled to 5 V through 100 kΩ resistor	-	90	130	ns
SR	Slew rate	C_L = 180 pF, R_{pu} = 5 kΩ	-	60		V/µs
t_{sd}	Shutdown to high-/low-side driver propagation delay	V_{OUT} = 0, V_{boot} = V_{CC}, V_{IN} = 0 to 3.3 V	50	125	200	ns
t_{isd}	Comparator triggering to high-/ low-side driver turn-off propagation delay	Measured applying a voltage step from 0 V to 3.3 V to pin CIN	50	200	250	

1. *Equivalent values as a result of the resistances of three drivers in parallel.*

Table 13. Truth table

Conditions	Logic input (V_I)			Output	
	T/$\overline{SD}$/OD	LIN	HIN	LVG	HVG
Shutdown enable half-bridge tri-state	L	X[1]	X[1]	L	L
Interlocking half-bridge tri-state	H	H	H	L	L
0 “logic state” half-bridge tri-state	H	L	L	L	L
1 “logic state” low-side direct driving	H	H	L	H	L
1 “logic state” high-side direct driving	H	L	H	L	H

1. *X: don’t care.*

3.2.1 NTC thermistor

Figure 5. Internal structure of $\overline{SD}$ and NTC

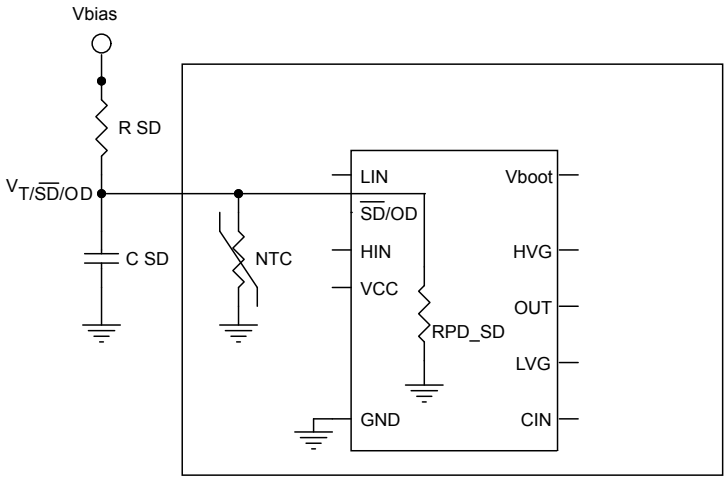

RPD_SD: equivalent value as result of resistances of three drivers in parallel.

Figure 6. Equivalent resistance (NTC//R_{PD_SD})

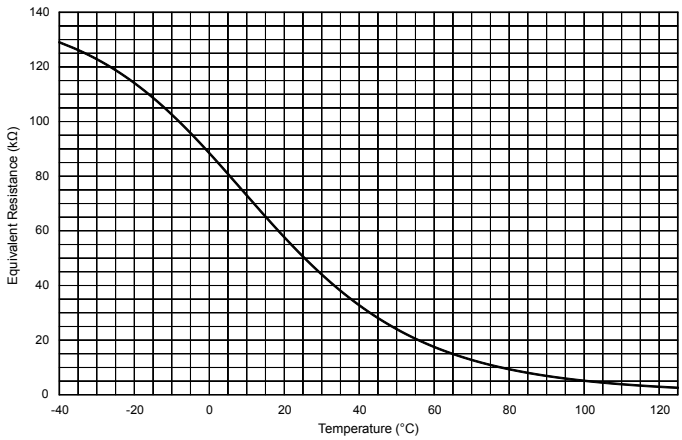

Figure 7. Equivalent resistance (NTC//R_{PD_SD}) zoom

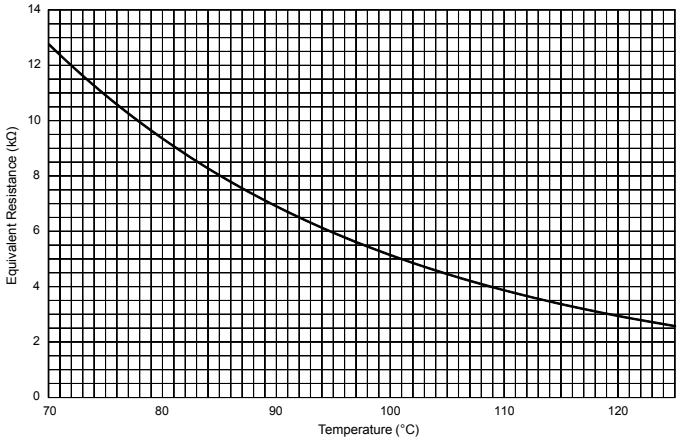

Figure 8. Voltage of T/$\overline{SD}$/OD pin according to NTC temperature

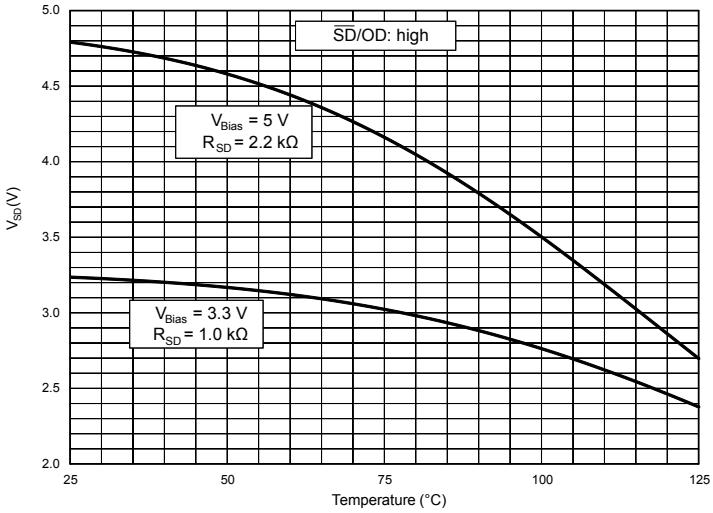

3.3 Waveform definitions

Figure 9. Dead time and interlocking waveform definitions

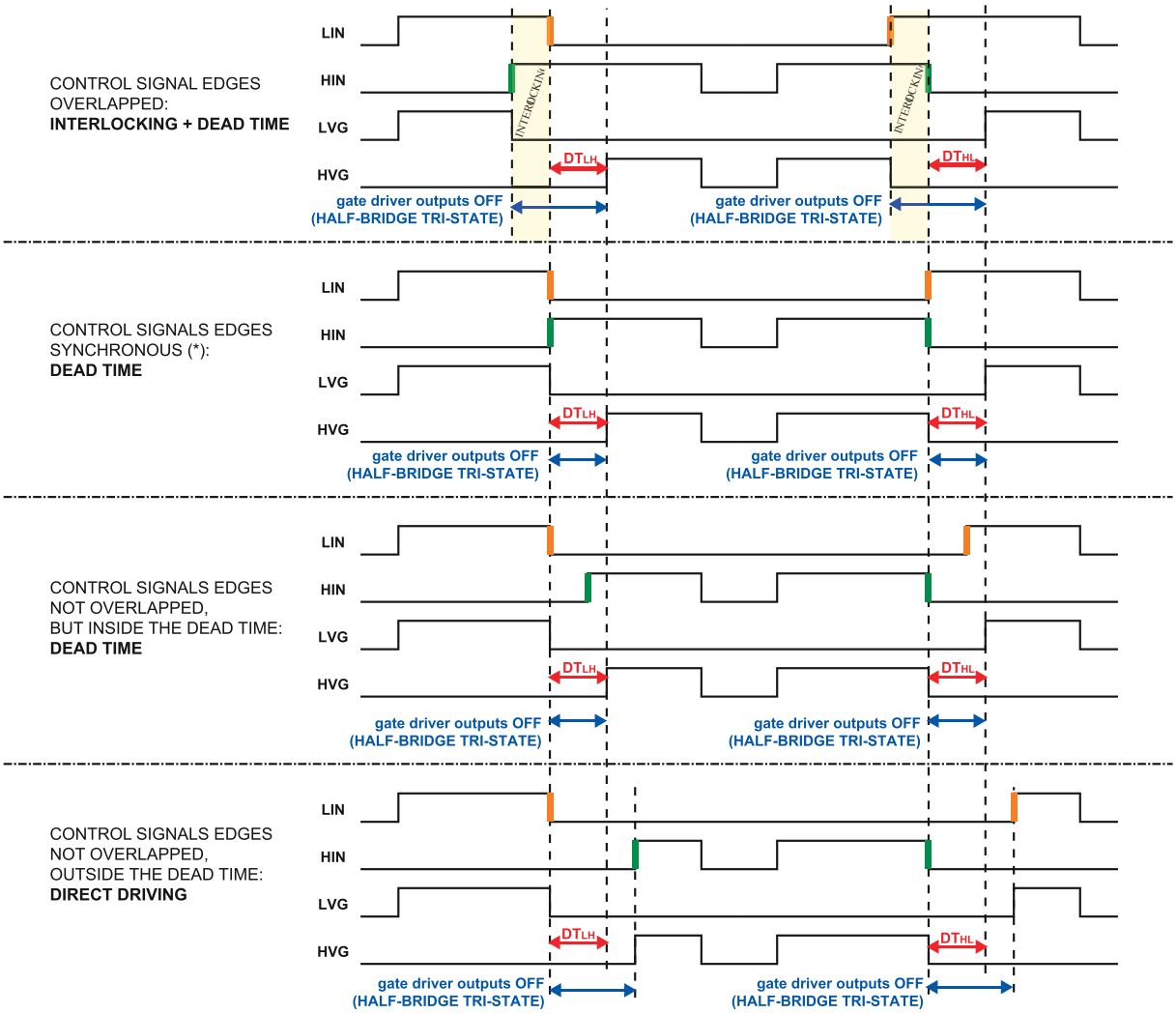

4 Shutdown function

The device is equipped with three half-bridge IC gate drivers and integrates a comparator for fault detection.

The comparator has an internal voltage reference V_{REF} connected to the inverting input, while the non-inverting input pin (CIN) can be connected to an external shunt resistor for current monitoring.

Since the comparator is embedded in the U IC gate driver, in case of fault it disables directly the U outputs, whereas the shutdown of V and W IC gate drivers depends on the RC value of the external SD circuitry, which fixes the disabling time.

For an effective design of the shutdown circuit, please refer to Application note AN4966.

Figure 10. Shutdown timing waveforms

GADG250120171515FSR

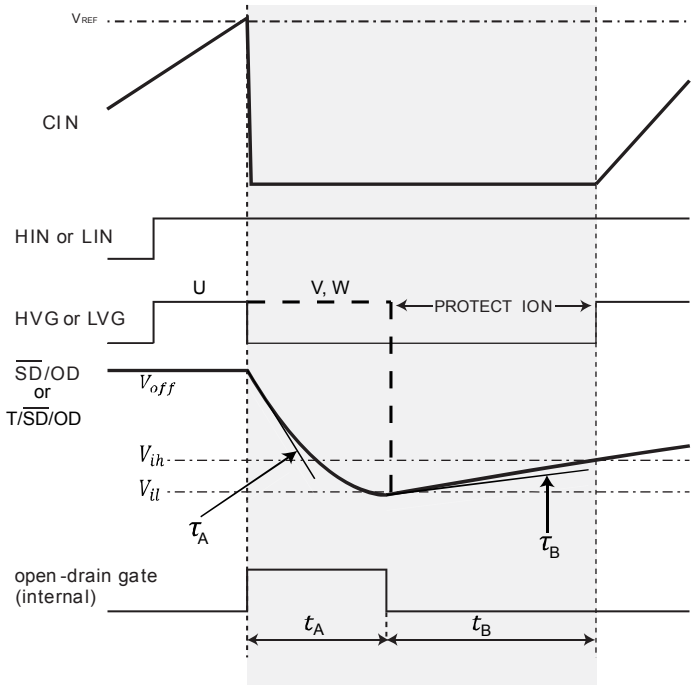

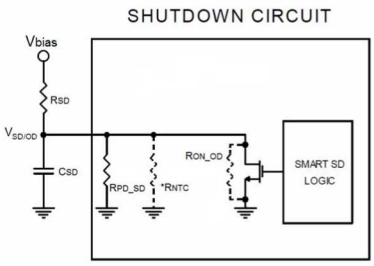

$$t_A \cong \tau_A \cdot ln\left(\frac{V_{off} - V_{on}}{V_{il} - V_{on}}\right), \quad t_B \cong \tau_B \cdot ln\left(\frac{V_{il} - V_{off}}{V_{ih} - V_{off}}\right)$$

$$\tau_A = (R_{ON_OD}//R_{SD}//R_{PD_SD}//{}^*R_{NTC}) \cdot C_{SD} \cong R_{ON_OD} \cdot C_{SD}$$

$$\tau_B = (R_{SD}//R_{PD_SD}//{}^*R_{NTC}) \cdot C_{SD}$$

$$V_{on} = \frac{R_{ON_OD}//R_{PD_SD}//{}^*R_{NTC}}{(R_{ON_OD}//R_{PD_SD}//{}^*R_{NTC}) + R_{SD}} \cdot V_{bias} \cong \frac{R_{ON_OD}}{R_{ON_OD} + R_{SD}} \cdot V_{bias}$$

$$V_{off} = \frac{R_{PD_SD}//{}^*R_{NTC}}{(R_{PD_SD}//{}^*R_{NTC}) + R_{SD}} \cdot V_{bias}$$

R_{SD} and C_{SD} external circuitry must be designed to ensure $V_{on} < V_{il}$ & $V_{off} > V_{ih}$

Please refer to AN4966 for further details.

* R_{NTC} to be considered only when the NTC is internally connected to the T/$\overline{SD}$/OD pin.

5 Application circuit example

Figure 11. Application circuit example

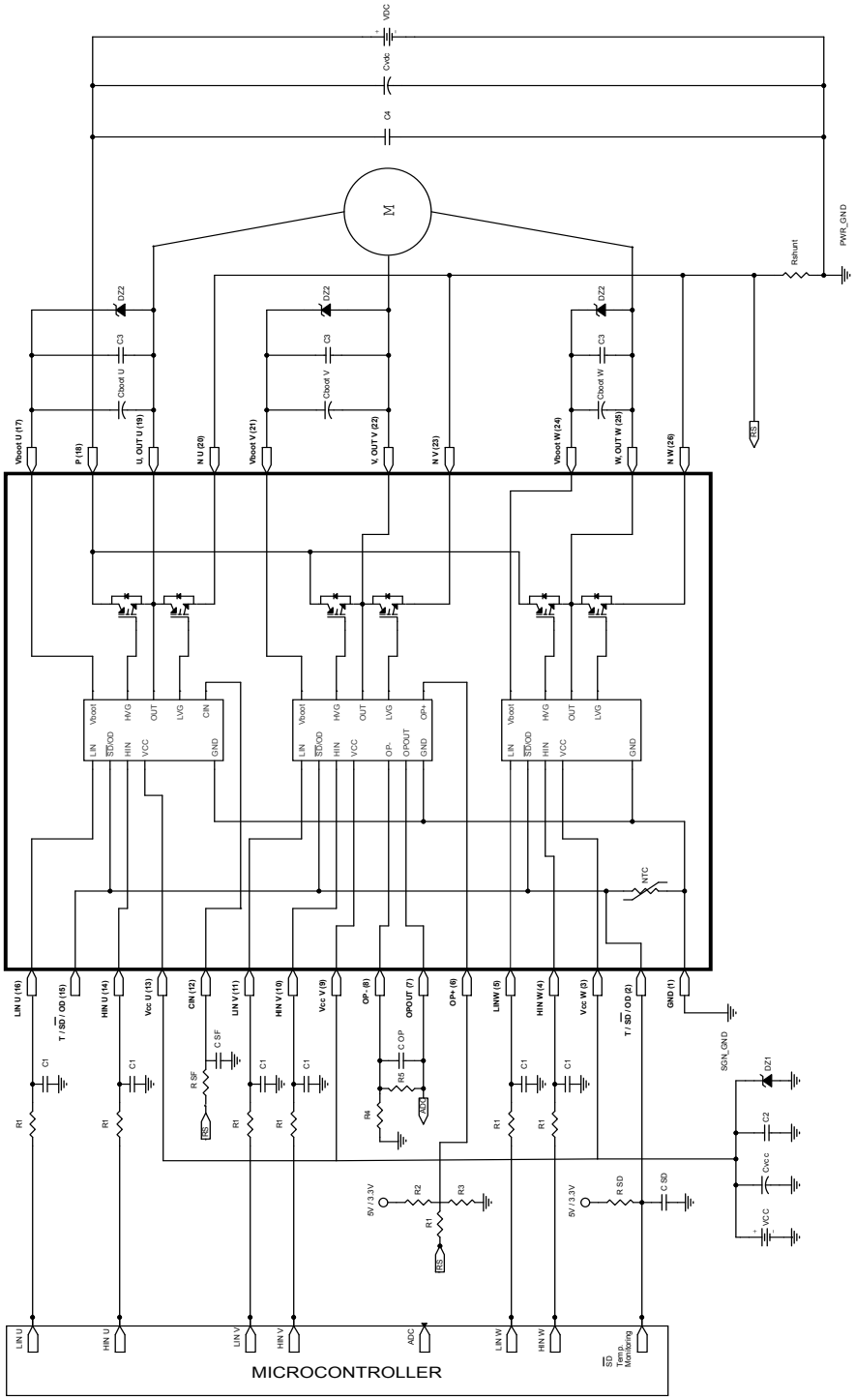

GAD250720161156FSR

Application designers are free to use a different scheme according to the specifications of the device.

5.1 Guidelines

- Input signals HIN, LIN are active high logic. A 375 kΩ (typ.) pull-down resistor is built-in for each input. To avoid input signal oscillation, the wiring of each input should be as short as possible, and the use of RC filters (R_1, C_1) on each input signal is suggested. The filters should be with a time constant of about 100 ns and placed as close as possible to the IPM input pins.
- The use of a bypass capacitor C_{VCC} (aluminum or tantalum) can reduce the transient circuit demand on the power supply. Also, to reduce any high-frequency switching noise distributed on the power lines, a decoupling capacitor C_2 (100 to 220 nF, with low ESR and low ESL) should be placed as close as possible to the V_{cc} pin and in parallel with the bypass capacitor.
- The use of an RC filter (R_{SF}, C_{SF}) is recommended to prevent protection circuit malfunction. The time constant (R_{SF} x C_{SF}) should be set to 1 µs and the filter must be placed as close as possible to the C_{IN} pin.
- The $\overline{SD}$ is an input/output pin (open-drain type if it is used as output). A built-in thermistor NTC is internally connected between the $\overline{SD}$ pin and GND. The voltage V_{SD}-GND decreases as the temperature increases, due to the pull-up resistor R_{SD}. In order to keep the voltage always higher than the high-level logic threshold, the pull-up resistor should be set to 1 kΩ or 2.2 kΩ for 3.3 V or 5 V MCU power supply, respectively. The capacitor C_{SD} of the filter on $\overline{SD}$ should be fixed no higher than 3.3 nF in order to assure the $\overline{SD}$ activation time $\tau_A \leq 500$ ns. Besides, the filter should be placed as close as possible to the $\overline{SD}$ pin.
- The decoupling capacitor C_3 (from 100 to 220 nF, ceramic with low ESR and low ESL), in parallel with each C_{boot}, filters high-frequency disturbance. Both C_{boot} and C_3 (if present) should be placed as close as possible to the U, V, W and V_{boot} pins. Bootstrap negative electrodes should be connected to U, V, W terminals directly and separated from the main output wires.
- To avoid overvoltage on the V_{cc} pin, a Zener diode (Dz1) can be used. Similarly on the V_{boot} pin, a Zener diode (Dz2) can be placed in parallel with each C_{boot}.
- The use of the decoupling capacitor C_4 (100 to 220 nF, with low ESR and low ESL) in parallel with the electrolytic capacitor C_{vdc} is useful to prevent surge destruction. Both capacitors C_4 and C_{vdc} should be placed as close as possible to the IPM (C_4 has priority over C_{vdc}).
- By integrating an application-specific type HVIC inside the module, direct coupling to the MCU terminals without an opto-couplers is possible.
- Low-inductance shunt resistors have to be used for phase leg current sensing.
- In order to avoid malfunctions, the wiring on N pins, the shunt resistor and P_{WR_GND} should be as short as possible.
- The connection of SGN_GND to PWR_GND on one point only (close to the shunt resistor terminal) can reduce the impact of power ground fluctuation.

These guidelines ensure the specifications of the device for application designs. For further details, please refer to the relevant application note.

Table 14. Recommended operating conditions

Symbol	Parameter	Test conditions	Min.	Typ.	Max.	Unit
V_{PN}	Supply voltage	Applied among P-Nu, Nv, Nw		300	500	V
V_{CC}	Control supply voltage	Applied to V_{CC}-GND	13.5	15	18	V
V_{BS}	High-side bias voltage	Applied to V_{BOOTx}-OUT for x = U, V, W	13		18	V
t_{dead}	Blanking time to prevent arm-short	For each input signal	1.5			µs
f_{PWM}	PWM input signal	-40 °C < T_C < 100 °C -40 °C < T_J < 125 °C			25	kHz
T_C	Case operation temperature				100	°C

6 Electrical characteristics (curves)

Figure 12. Output characteristics

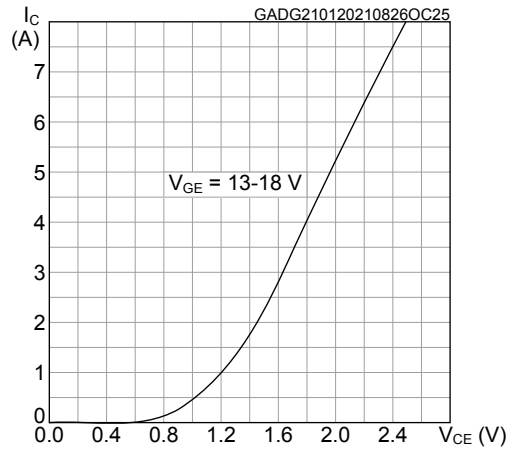

Figure 13. $V_{CE(sat)}$ vs collector current

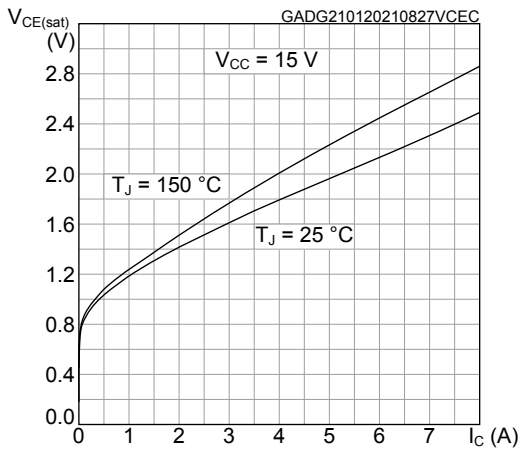

Figure 14. Diode V_F vs forward current

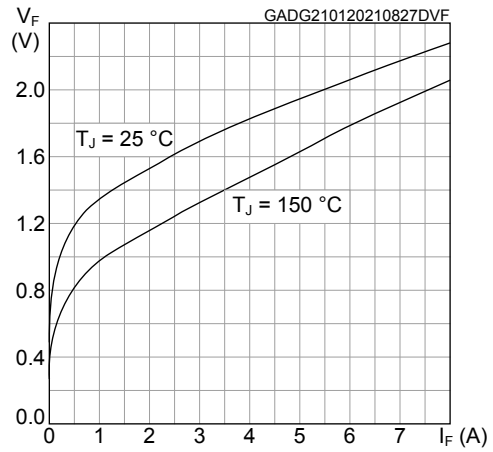

Figure 15. I_C vs case temperature

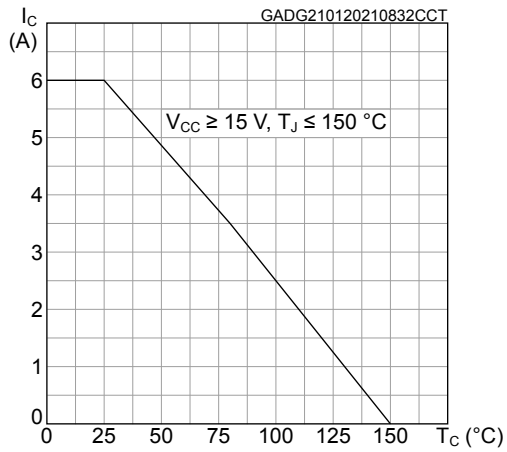

Figure 16. E_{on} switching energy vs collector current

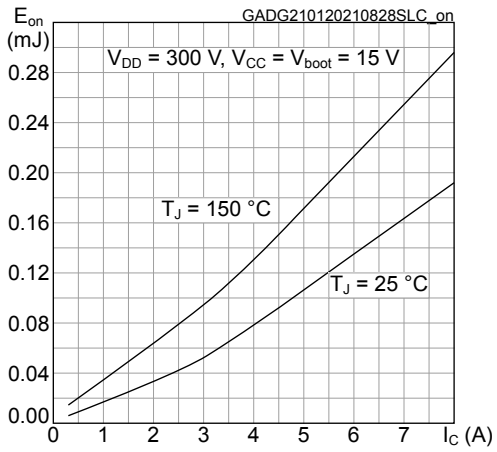

Figure 17. E_{off} switching energy vs collector current

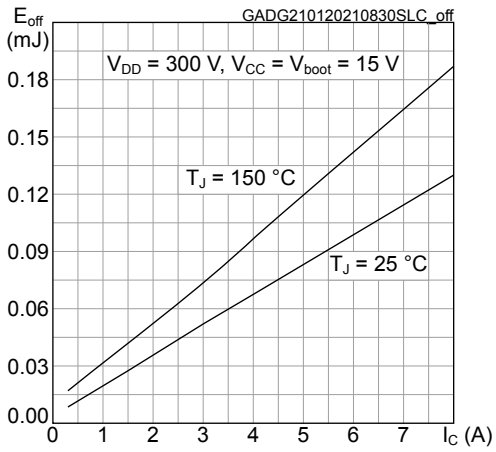

Figure 18. Normalized transient thermal impedance for IGBT

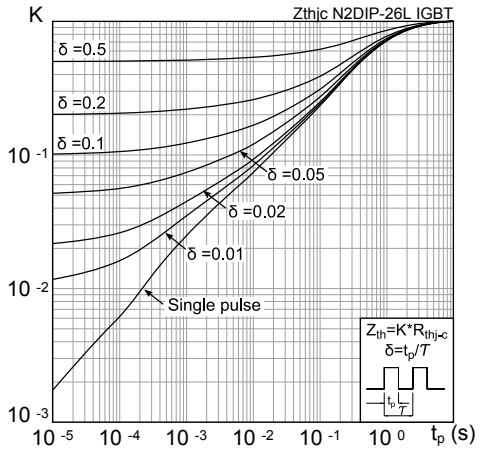

7 Package information

In order to meet environmental requirements, ST offers these devices in different grades of ECOPACK packages, depending on their level of environmental compliance. ECOPACK specifications, grade definitions and product status are available at: www.st.com. ECOPACK is an ST trademark.

7.1 N2DIP-26L type Z package information

Figure 19. N2DIP-26L type Z package outline

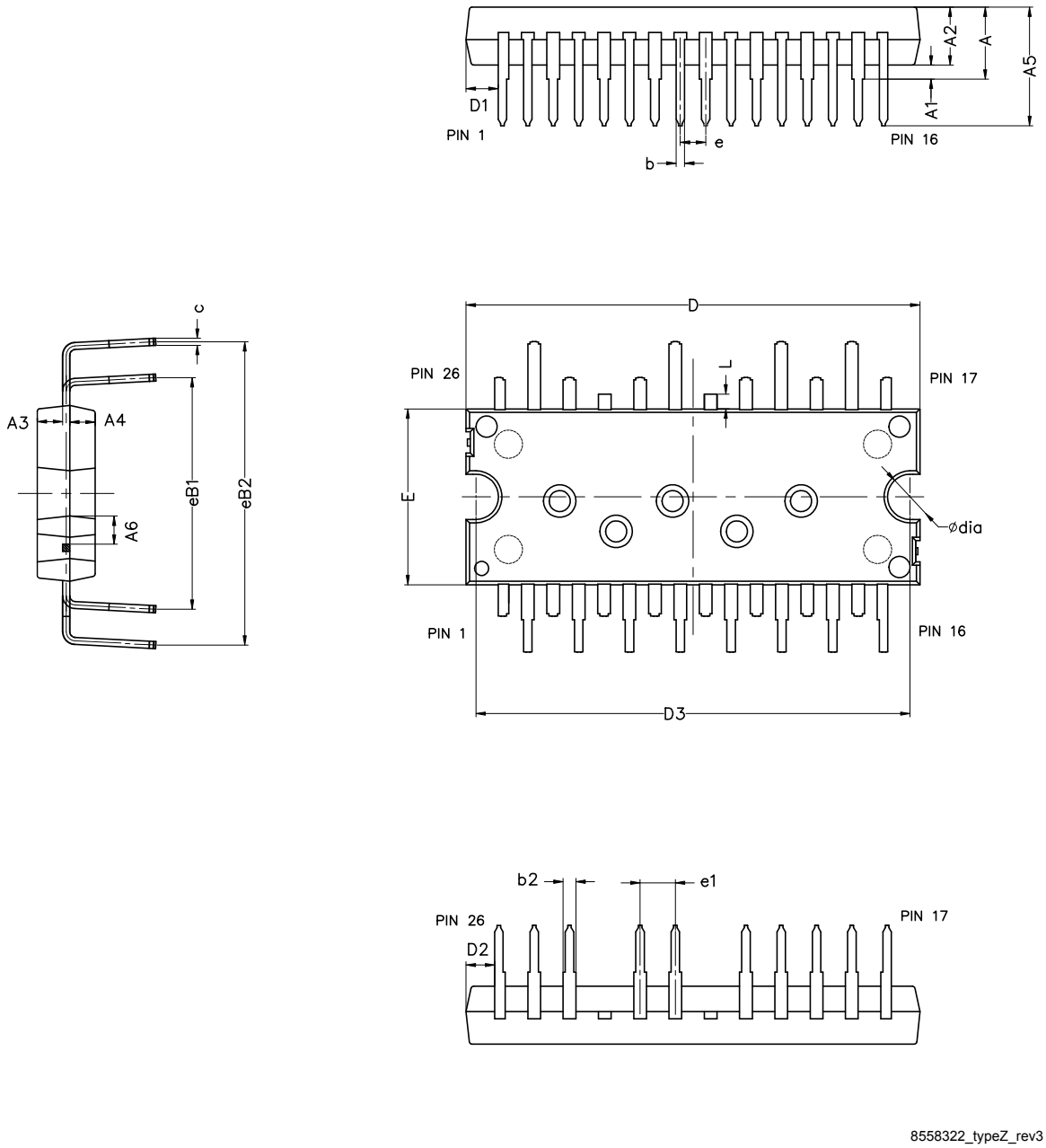

Table 15. **N2DIP-26L type Z mechanical data**

Dim.	mm		
	Min.	Typ.	Max.
A	4.80	5.10	5.40
A1	0.80	1.00	1.20
A2	4.00	4.10	4.20
A3	1.70	1.80	1.90
A4	1.70	1.80	1.90
A5	8.10	8.40	8.70
A6	1.75		
b	0.53		0.72
b2	0.83		1.02
c	0.46		0.59
D	32.05	32.15	32.25
D1	2.10		
D2	1.85		
D3	30.65	30.75	30.85
E	12.35	12.45	12.55
e	1.70	1.80	1.90
e1	2.40	2.50	2.60
eB1	16.10	16.40	16.70
eB2	21.18	21.48	21.78
L	0.85	1.05	1.25
Dia	3.10	3.20	3.30

7.2 N2DIP-26L packing information

Figure 20. N2DIP-26L tube (dimensions are in mm)

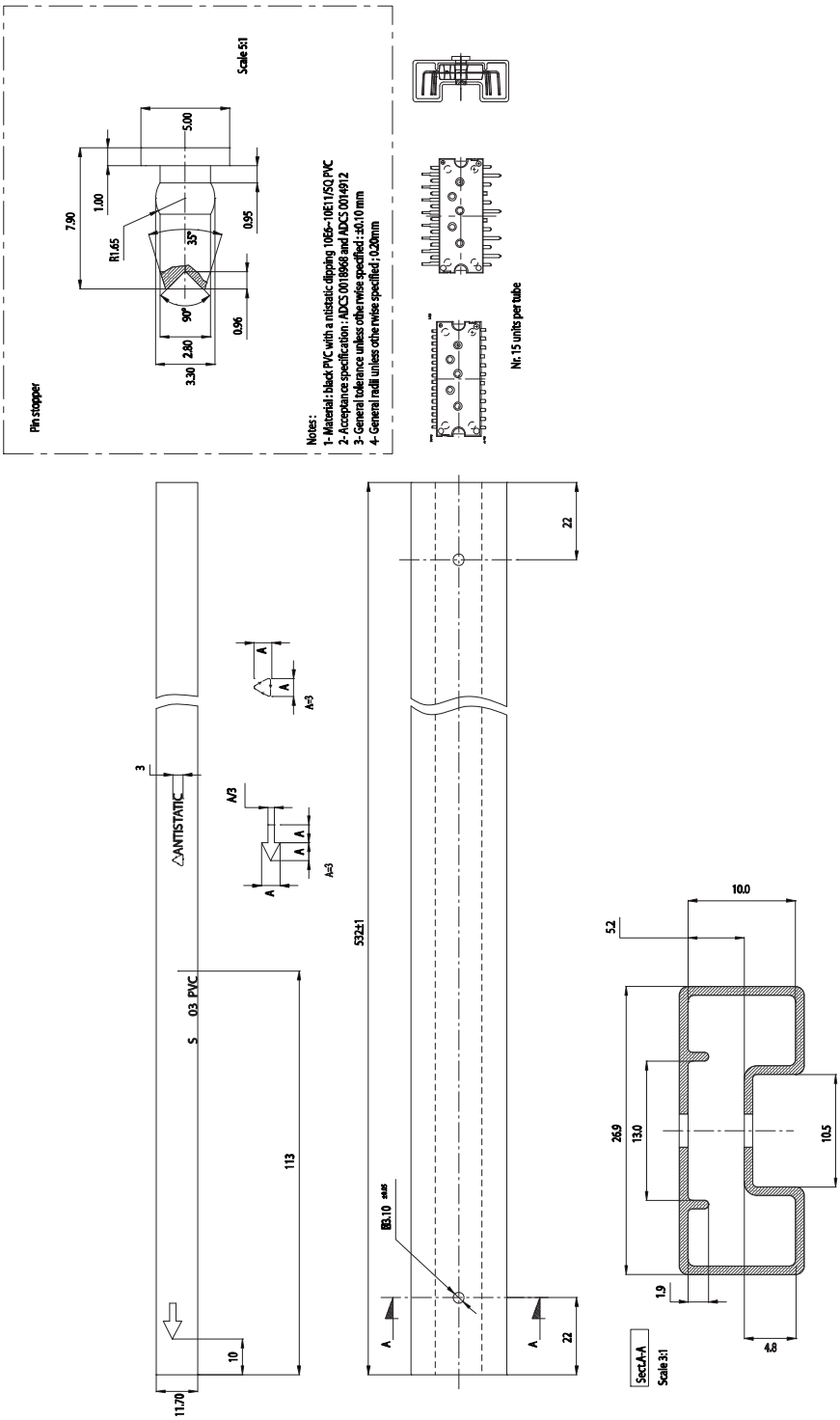

Revision history

Table 16. Document revision history

Date	Version	Changes
03-Nov-2020	1	First release.
21-Jan-2021	2	Updated Features. Updated Table 6. Static and Table 7. Inductive load switching time and energy. Added Section 6 Electrical characteristics (curves).

Contents

1 Internal schematic diagram and pin configuration 2

2 Electrical ratings 5

2.1 Absolute maximum ratings 5

2.1.1 Thermal data 6

3 Electrical characteristics 7

3.1 Inverter part 7

3.2 Control part 9

3.2.1 NTC thermistor 11

3.3 Waveform definitions 13

4 Shutdown function 14

5 Application circuit example 15

5.1 Guidelines 16

6 Electrical characteristics (curves) 17

7 Package information 19

7.1 N2DIP-26L type Z package information 19

7.2 N2DIP-26L packing information 21

Revision history 22

IMPORTANT NOTICE – PLEASE READ CAREFULLY

STMicroelectronics NV and its subsidiaries (“ST”) reserve the right to make changes, corrections, enhancements, modifications, and improvements to ST products and/or to this document at any time without notice. Purchasers should obtain the latest relevant information on ST products before placing orders. ST products are sold pursuant to ST’s terms and conditions of sale in place at the time of order acknowledgement.

Purchasers are solely responsible for the choice, selection, and use of ST products and ST assumes no liability for application assistance or the design of Purchasers’ products.

No license, express or implied, to any intellectual property right is granted by ST herein.

Resale of ST products with provisions different from the information set forth herein shall void any warranty granted by ST for such product.

ST and the ST logo are trademarks of ST. For additional information about ST trademarks, please refer to www.st.com/trademarks. All other product or service names are the property of their respective owners.

Information in this document supersedes and replaces information previously supplied in any prior versions of this document.

© 2021 STMicroelectronics – All rights reserved