BASE PART NUMBER	THICKNESS	MATERIAL	STANDARD LENGTH PART NUMBER
0097-0622 (STANDARD)	0.127 ± 0.004 [0.0050]	BeCu ALLOY 25 TH02	0097062202
0098-0622 (ULTRASOFT)	0.064 ± 0.005 [0.0025]	BeCu ALLOY 25 TH02	0098062202

PLATING CODE TABLE	
NUMBER CODE	PLATING TYPE
02	BRIGHT FINISH
17	BRIGHT TIN
19	BRIGHT NICKEL
MORE PLATING OPTIONS AVAILABLE CONTACT LAIRD SALES FOR DETAILS	

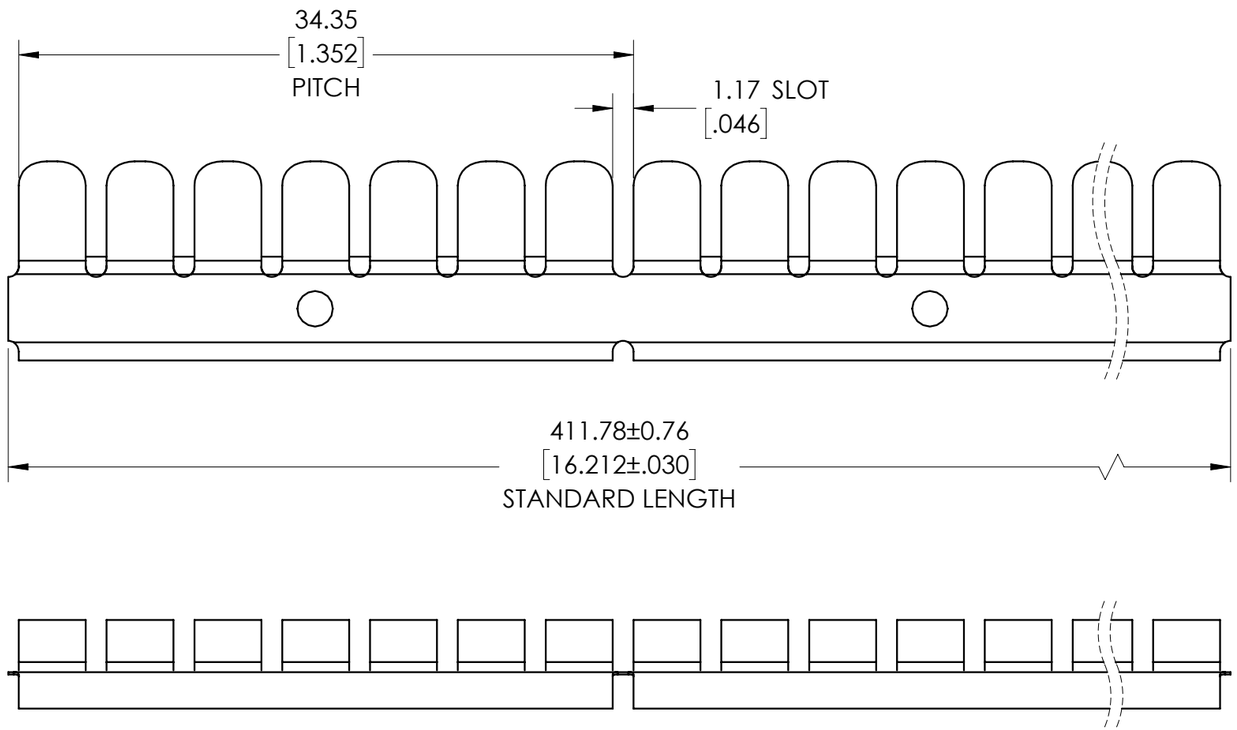

CUSTOM LENGTHS AVAILABLE IN MULTIPLES OF PITCHES OR "FINGERS"
LENGTH = PITCH X N
WHERE 'PITCH' IS 34.35 AND 'N' IS NUMBER OF PITCHES
EXAMPLE: 7 x 34.35 = 240.45MM LONG
SEE BOTTOM LEFT FOR CUSTOM LENGTH PART NUMBERING

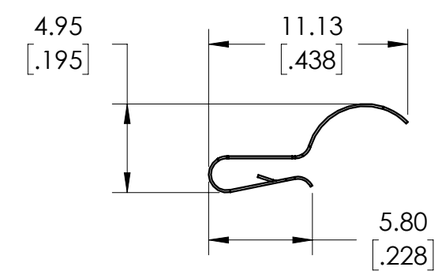

CUSTOM LENGTH PART NUMBER CONFIGURATION:

009X 0622 XX N 0XXXX

- X (009X): 7 FOR STANDARD, 8 FOR ULTRASOFT
- XX: PLATING CODE (SEE TABLE)
- XXXX: LENGTH IN MM TO ONE DECIMAL PLACE

EXAMPLE: 0098062217N02405
ULTRASOFT, BRIGHT TIN PLATING, 240.45MM LONG (7 FINGERS)

UNITS: MM [INCH]	Laird	LAIRD DRAWING NUMBER: 0097-0622-SALES
TOLERANCES: X.X = ± 0.4, X.XX = ± 0.2, X.XXX = ± 0.1	3RD ANGLE PROJECTION	THIS IS AN UNCONTROLLED SALES DRAWING. THE DIMENSIONAL CHARACTERISTICS AND TOLERANCES OF THIS PART SHOWN ON THIS DRAWING AS A REFERENCE TO THE DIMENSIONAL SPECIFICATIONS OF THE LAIRD STANDARD PRODUCTION DRAWING FOR THIS PART. ANY SUBSEQUENT CHANGES TO THE STANDARD PART SPECIFICATION WILL SUPERSEDE THIS SALES DRAWING.
ANGULAR: X° = ± 3°, X.X° = ± 1.0°	DESIGNED IN SOLIDWORKS / SCALE: 3:1 / SHEET 1 OF 1	SIZE B