Panasonic
ideas for life

MOTION SENSOR (PASSIVE INFRARED TYPE)

MP MOTION SENSOR 'NaPiOn'

Standard type

Slight motion detection type

Spot type

10 m detection type

What is passive infrared type?

This sensor detects changes in infrared radiation which occur when there is movement by a person (or object) which is different in temperature from the surroundings.

① As this sensor detects temperature differences, it is well suited to detecting the motion of people by their body temperature.

② Wide sensing area.

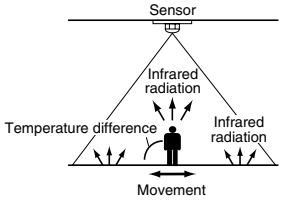

FEATURES

1. The world's smallest with a built-in amplifier

Extremely compact. Ideal for use in miniaturized devices.

2. Dual lens colors (white and black) are provided

With an ultrasmall design and dual lens colors (white and black), it is inconspicuous, allowing the user to select either white or black to match the equipment color. This provides greater flexibility in equipment design.

3. Both digital output and analog output (with adjustable sensitivity) are available.

4. Built-in amplifier for easy use

Has a built-in amplifier, and can be connected directly to a microcomputer.

• Block diagram of the digital output circuit

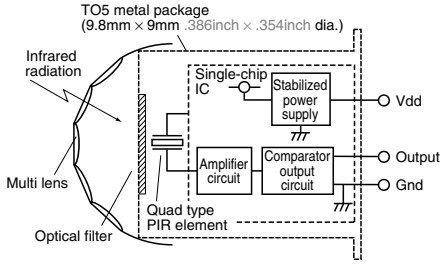

• Block diagram of the analog output circuit

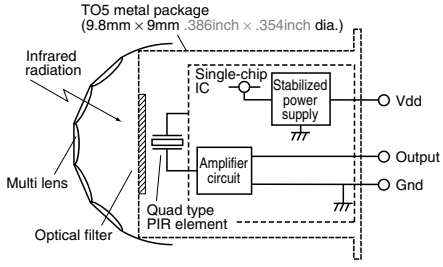

5. Detects even slight motion of a person

With our sensor, even slight motions made by people will be detected easily.

• Fine motion detection capability within approximately 2 meters of sensor.

Standard type:
Detects movement of approximately 30cm 11.811inch.

Slight motion detection type:
Detects movement of approximately 20cm 7.874inch.

6. Noise withstanding capability

Circuitry is contained in a TO5 metal package, providing at least twice the noise withstanding capability as conventional type.

• Comparison example of noise withstanding capability

	Distance at which motion sensor is not affected by cellular phone noise
Conventional type	Min. 1 to 2m 3.281 to 6.562ft
MP Motion Sensor	Min. 1 to 2cm .394 to .787inch

7. A low current consumption type (46 µA) has also been added to the line-up.

A type that keeps current consumption to 46 µA (less than 30% compared to predecessor) is now available.
Ideal for battery driven devices.

*Digital output type only.

APPLICATIONS

1. Home appliances
Useful for saving energy in air conditioner, television, personal computer, or ventilator and air purifier

2. Amusement machine market
Useful for saving energy and for automated guidance in theme parks and large video games

3. Equipment in service market
Useful for automated guidance, automated announcements and energy saving in vending machines, ATMs, etc.

4. Lighting market
Automated on/off controls, etc. for lamps, desk lamps, indoor lights, halls, stairway lights, etc.

ORDERING INFORMATION

AMN [ ] [ ] 1 [ ] [ ]

Output
1: Digital output
2: Analog output
4: Low current consumption (digital output)

Detection performance
1: Standard detection type
2: Slight motion detection type
3: Spot detection type
4: 10m detection type

Feature
1: PC board mounting type

Operating voltage
1: 5V DC
2: 3V DC

Lens color
1: Black
2: White

PRODUCT TYPES

1. Digital output

Rated operating voltage	Detection performance		Ambient temperature	Lens color	Part No.	Packing quantity	
						Inner	Outer
3 to 6 V DC	Standard detection type	Standard	–20 to +60°C –4 to +140°F	Black	AMN11111	50 pcs.	1,000 pcs.
				White	AMN11112		
		Low current consumption		Black	AMN41121		
				White	AMN41122		
	Slight motion detection type	Standard		Black	AMN12111		
				White	AMN12112		
		Low current consumption		Black	AMN42121		
				White	AMN42122		
	Spot detection type	Standard		Black	AMN13111		
				White	AMN13112		
		Low current consumption		Black	AMN43121		
				White	AMN43122		
	10m detection type	Standard		Black	AMN14111		
				White	AMN14112		
		Low current consumption		Black	AMN44121		
				White	AMN44122		

2. Analog output

Rated operating voltage	Detection performance	Ambient temperature	Lens color	Part No.	Packing quantity	
					Inner	Outer
4.5 to 5.5 V DC	Standard detection type	–20 to +60°C –4 to +140°F	Black	AMN21111	50 pcs.	1,000 pcs.
			White	AMN21112		
	Slight motion detection type		Black	AMN22111		
			White	AMN22112		
	Spot detection type		Black	AMN23111		
			White	AMN23112		
	10m detection type		Black	AMN24111		
			White	AMN24112		

PERFORMANCE

1. Detection performance

Items		Standard detection type	Slight motion detection type	Spot detection type	10m detection type	Conditions of objects to be detected
Rated detection distance*Remark 1		5m 16.404ft (Max.)	2m 6.562ft (Max.)	5m 16.404ft (Max.)	10m 32.808ft (Max.)	1. Detectable difference in temperature between the target and background for the spot type is more than 4°C 39.2°F. 2. Movement speed • Standard detection type/Spot detection type/ 10m detection type: 0.5 to 1.5 m/s • Slight motion detection type: 0.3 to 1.0 m/s 3. Detection object = human body (size is 700mm × 250mm 27.559inch × 9.843inch, but for the slight motion detection type the size is 200mm × 200mm 7.874inch × 7.874inch)
Detection range	Horizontal*Remark 2	100°	91°	38°	110°	
	Vertical*Remark 2	82°	91°	22°	93°	
	Detection zone*Remark 3	64 zones	104 zones	24 zones	80 zones	

2.

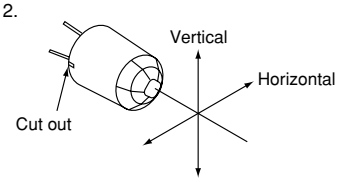

(Standard detection/
Slight motion detection type)

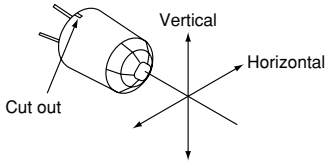

(Spot detection type/
10 m detection type)

*Remarks 1. Depending on the difference in temperature between the background and detection target and the speed at which the target moves, these sensors may be capable of detection beyond the detection distances stated above. Nevertheless, they should be used within the prescribed detection distances. For further details, refer to the detection range diagram on page 14.

3. Regarding of detection zone, please refer to “DETECTION PERFORMANCE” on page 14.

2. Rating (Measuring condition: ambient temp. = 25°C 77°F) (Common to All types)

Items	Specified value	Remarks
Power supply voltage	–0.3 to 7 V DC	
Usable ambient temperature	–20 to 60°C –4 to +140°F	No freezing and condensing at low temperature.
Storage temperature	–20 to 70°C –4 to +158°F	

3. Electrical characteristics (Measuring condition: ambient temp. = 25°C 77°F; operating voltage = 5V) (Common to All types)

1) Digital output

Items			Symbol	Specified value		Measured conditions
				Standard type	Low current consumption type	
Reted operating voltage		Minimum Typical Maximum	Vdd	3.0 V DC — 6.0 V DC	2.2 V DC — 3.0 V DC	
Reted consumption current (Standby) *Remark		Typical Maximum	Iw	170 µA 300 µA	46 µA 60 µA	Iout = 0
Output (when detecting)	Current	Maximum	Iout	100 µA	100 µA	Vout ≧ Vdd–0.5
	Voltage	Minimum Maximum	Vout	Vdd –0.5 —	Vdd –0.5 —	Open when not detecting
Circuit stability time		Typical Maximum	Twu	7 s 30 s	7 s 30 s	

Remark: The current which is consumed during detection consists of the standby consumed current plus the output current.

2) Analog output

Items		Symbol	Specified value	Measured conditions
Reted operating voltage	Minimum Maximum	Vdd	4.5 V DC 5.5 V DC	
Reted consumption current	Typical Maximum	Iw	0.17 mA 0.3 mA	Iout = 0
Output current	Maximum	Iout	50 µA	
Output voltage	Minimum Typical Maximum	Vout	0 V 2.5 V Vdd	
Output offset average voltage	Minimum Typical Maximum	Voff	2.3 V 2.5 V 2.7 V	Steady-state output voltage when not detecting
Steady-state noise	Typical Maximum	Vn	130 m Vp-p 300 m Vp-p	
Circuit stability time	Maximum	Twu	45 s	

Note: To set to the same detection performance as the digital type, set the output voltage to the offset voltage (2.5V) ±0.45V (i.e. 2.95V or more and 2.05V or less).

[Timing chart]

1) Digital output

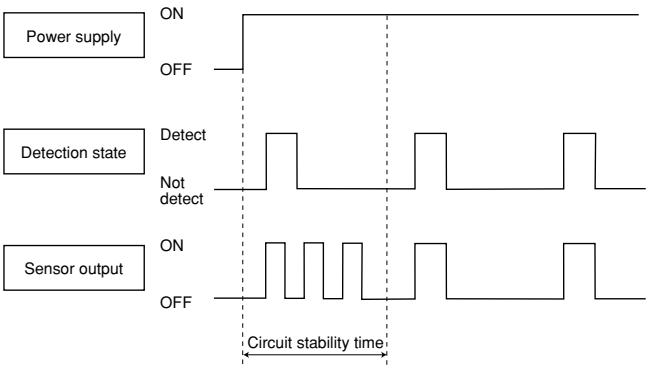

Remark: Circuit stability time: 30s max.
While the circuitry is stabilizing after the power is turned on, the sensor output is not fixed in the “on” state or “off” state. This is true regardless of whether or not the sensor has detected anything.

2) Analog output

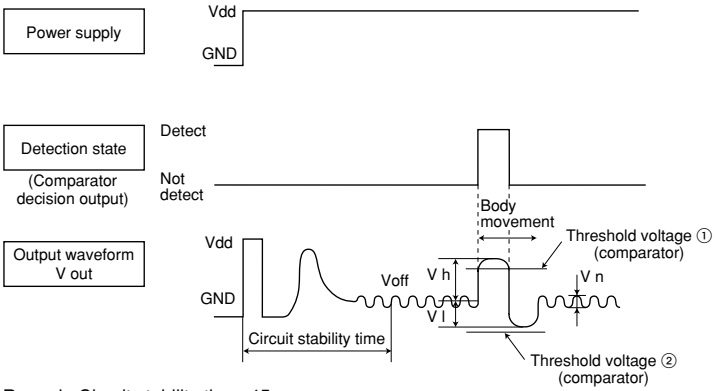

Remark: Circuit stability time: 45s max.
While the circuitry is stabilizing after the power is turned on, the sensor output is not fixed in the “on” state or “off” state. This is true regardless of whether or not the sensor has detected anything.

DETECTION PERFORMANCE

1. Standard detection type

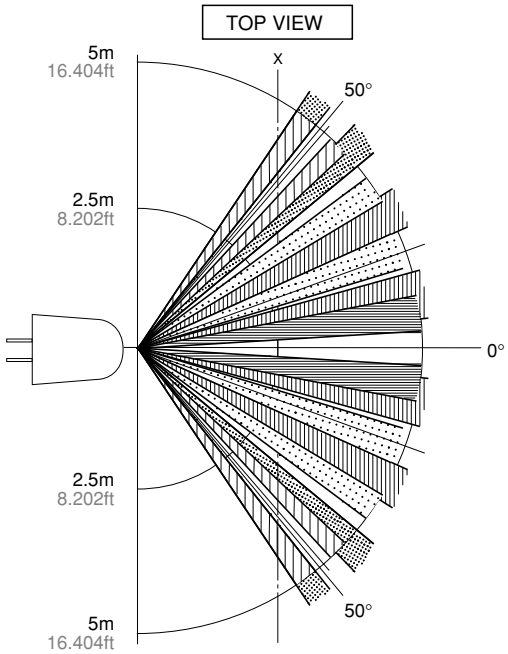

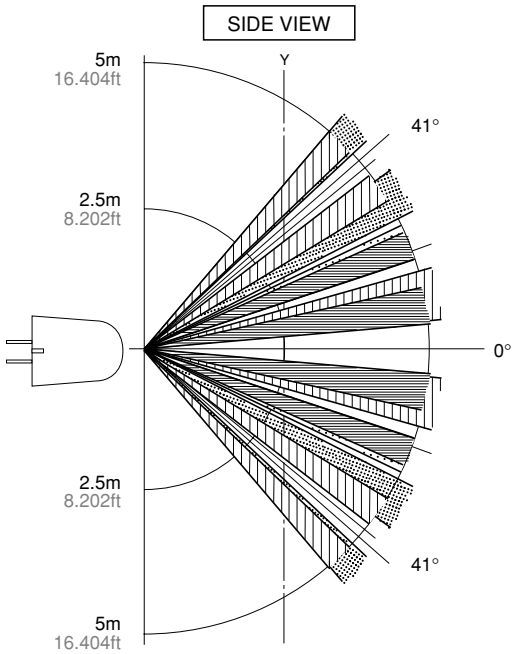

X-Y cross section

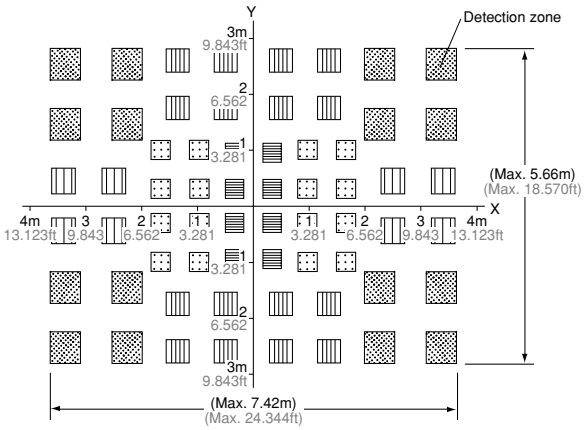

Remarks: 1. The X-Y cross-sectional diagram shows the detection area.
2. The differences in the detection zone patterns are indicative of the projections of the 16 lenses with single focal point and with five optical axes. An object whose temperature differs from the background temperature and which crosses inside the detection zone will be detected.

2. Slight motion detection type

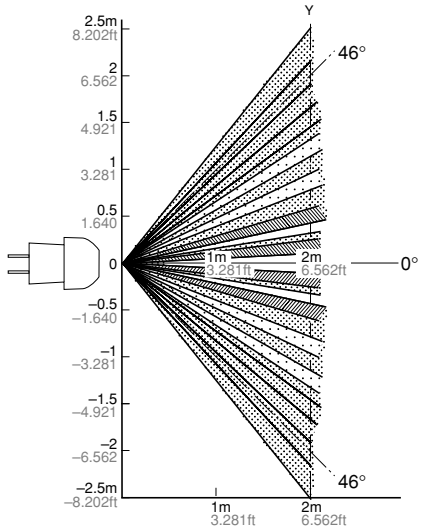

X-Y cross section

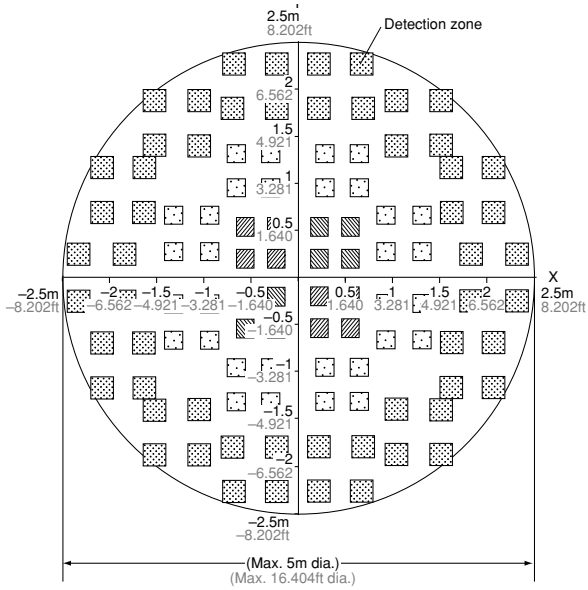

Remarks: 1. The X-Y cross-sectional diagram shows the detection area.
2. The differences in the detection zone patterns are indicative of the projections of the 26 lenses with single focal point and with three optical axes. An object whose temperature differs from the background temperature and which crosses inside the detection zone will be detected.

3. Spot detection type

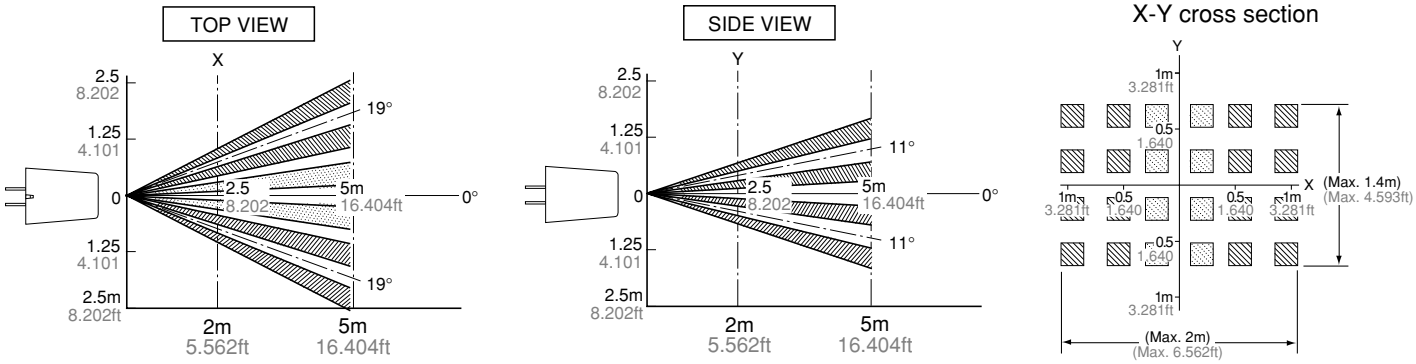

Remarks: 1. The X-Y cross-sectional diagram shows the detection area.
2. The differences in the detection zone patterns are indicative of the projections of the 6 lenses with single focal point and with two optical axes. An object whose temperature differs from the background temperature and which crosses inside the detection zone will be detected.

4. 10m detection type

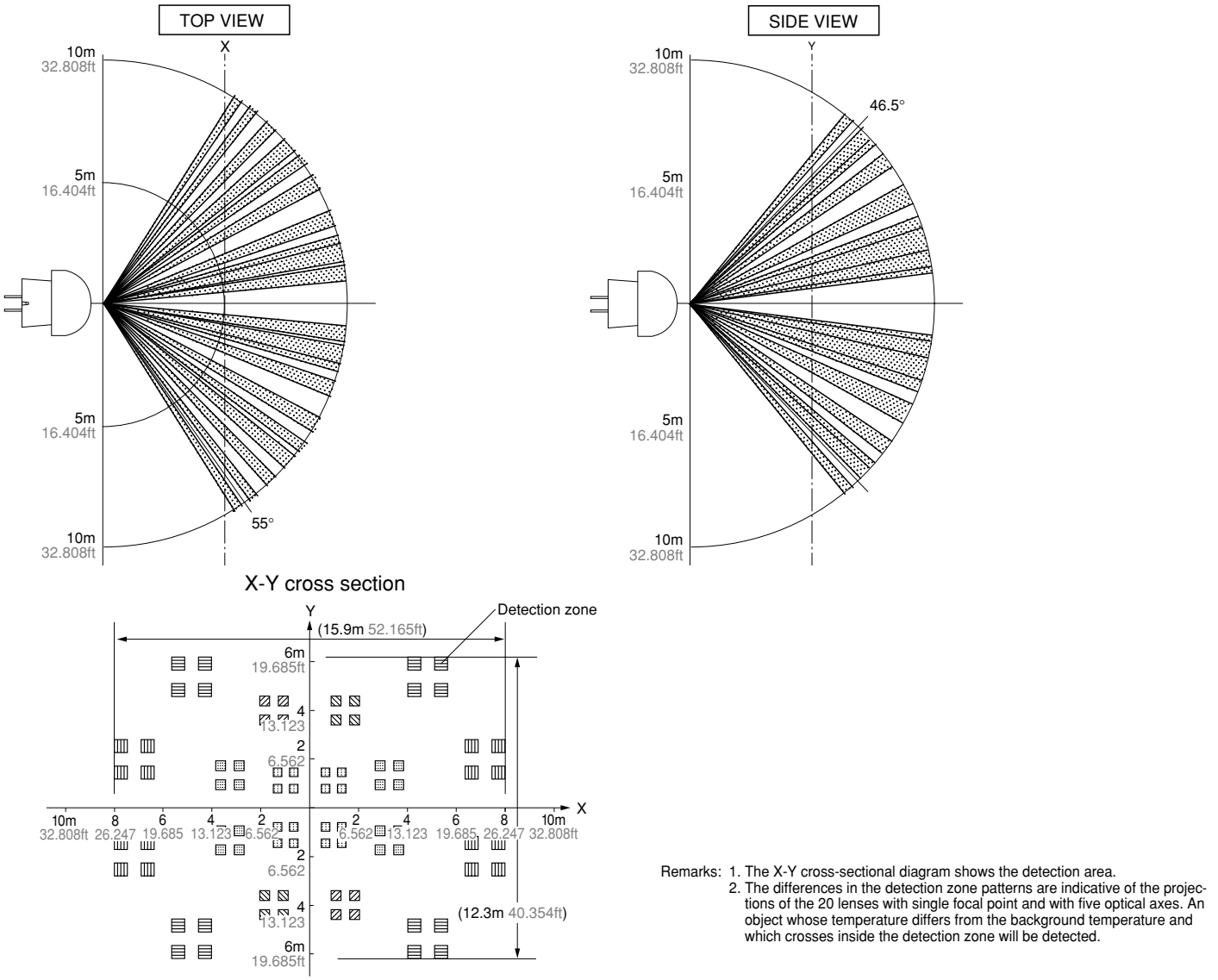

Remarks: 1. The X-Y cross-sectional diagram shows the detection area.
2. The differences in the detection zone patterns are indicative of the projections of the 20 lenses with single focal point and with five optical axes. An object whose temperature differs from the background temperature and which crosses inside the detection zone will be detected.

5. Notes regarding the detection zone

The detection zone has the polarity shown in the diagram on the right. When targets enter both the + and – zones with the same timing, the signals are cancelled each other, thus in this case there is a possibility that the object cannot be detected at the maximum specified detection distance.

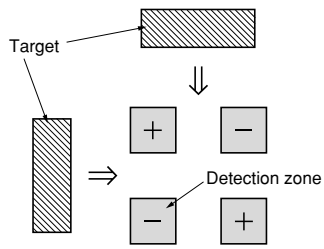

HOW TO USE

1. Wiring diagram

1) Digital output

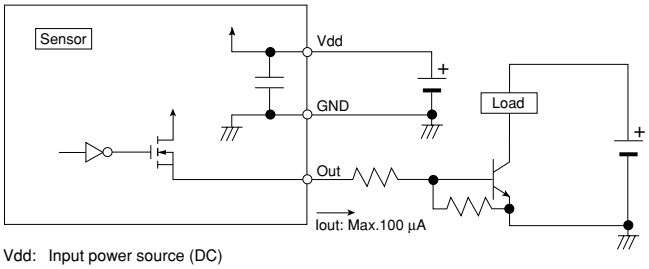

Vdd: Input power source (DC)
GND: GND
Out: Output (Comparator)

2) Analog output

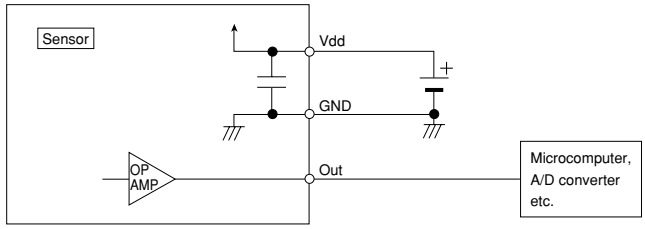

2. Timer circuit example

1) Digital output

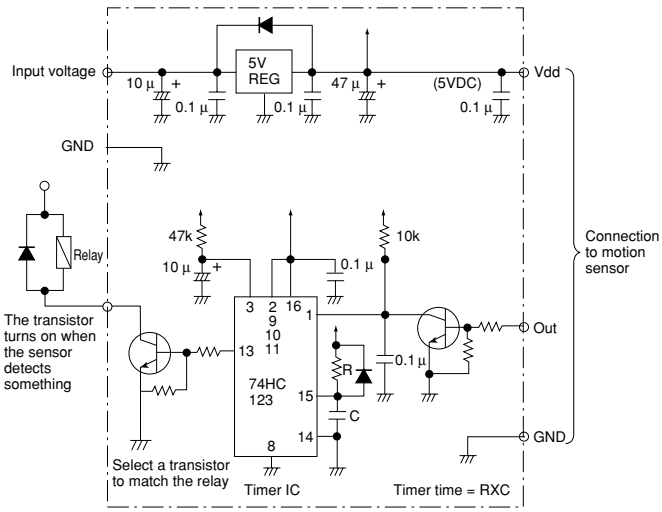

Note: This is the reference circuit which drives the MP motion sensor. Install a noise filter for applications requiring enhanced detection reliability and noise withstanding capability.
Differences in the specifications of electronic components to which the units are connected sometimes affect their correct operation; please check the units' performance and reliability for each application.

2) Analog output

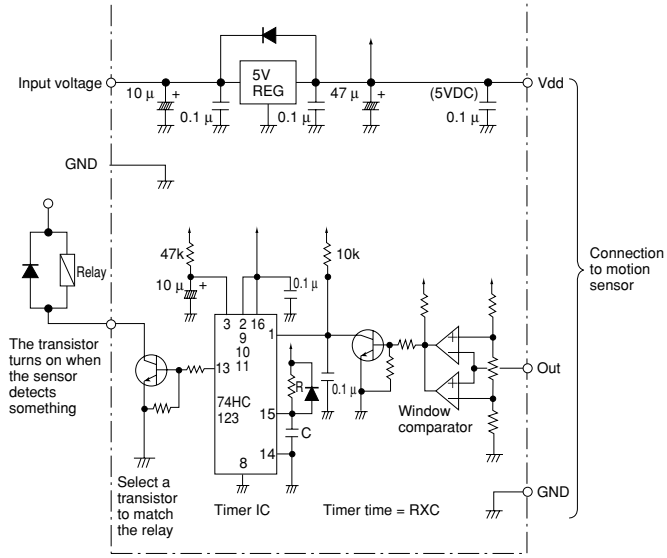

Note: This circuit is a sample of a drive circuit for the MP Motion Sensor. Its noise resistance and long-term reliability are not considered or investigated.
To improve the detection reliability and noise resistance of the circuit, consider adding a noise filter.
Matsushita Electric Works, Ltd. accepts no responsibility for damages resulting from the use of this circuit.

3. Installation

Install the sensor so that people will be entering from the X or Y direction shown below. If persons approch the sensor from the Z direction, detection distance will be shortened.

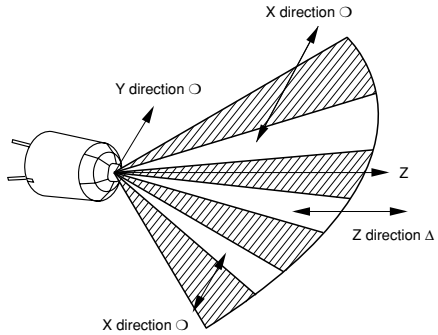

DIMENSIONS

mm inch General tolerance ±0.5 ±.020

1. Standard detection type

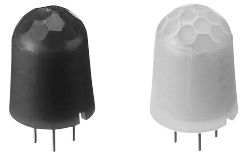

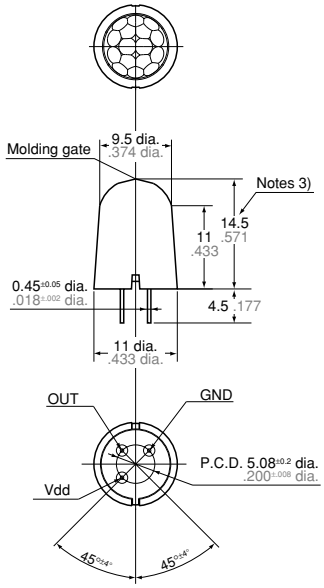

Recommended PC board pattern (BOTTOM VIEW)

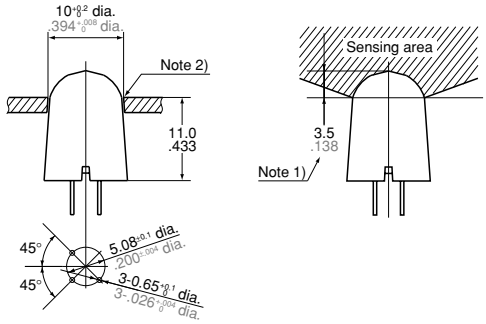

Notes: 1. In order to ensure proper detection, install it with the lens exposed at least 3.5mm .138inch.
2. As for panel mounting hole, tapering or making a large size hole should be done.
3. The height dimension does not include the remaining molding gate.

2. Slight motion detection type

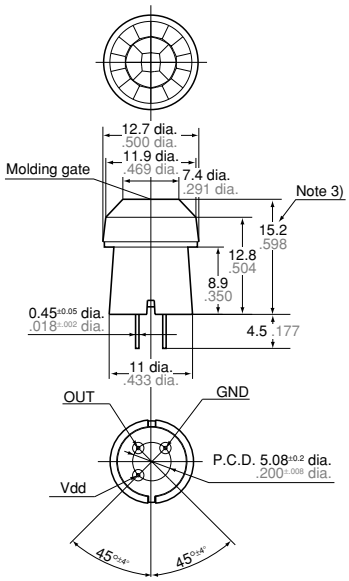

Recommended PC board pattern (BOTTOM VIEW)

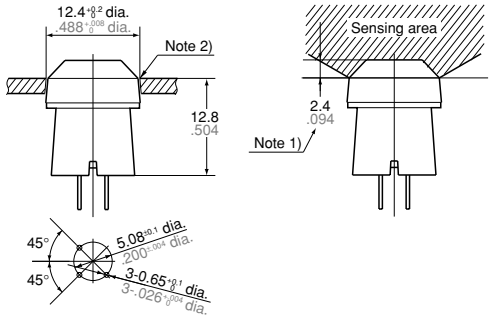

Notes: 1. In order to ensure proper detection, install it with the lens exposed at least 2.4mm .094inch.
2. As for panel mounting hole, tapering or making a large size hole should be done.
3. The height dimension does not include the remaining molding gate.