SIEMENS

Data sheet 3RQ3055-1SM30

!!! phased-out product !!! the preferred successor is 3RQ4055-1SM30 output coupler optocoupler 1 NO, transistor, 24 V DC output max. 30 V DC, 5 A short-circuit-proof screw terminal width 6.2 mm thermal current 5 A

product brand name	SIRIUS
product category	SIRIUS 3RQ3 coupling relays in slim design
product designation	Coupling relays with semiconductor output (not plug-in)
design of the product	Output coupling link
product type designation	3RQ3
General technical data	
display version LED	Yes
product feature protective coating on printed-circuit board	No
product component	
● relay output	No
● semi-conductor output	Yes
consumed active power	0.3 W
insulation voltage for overvoltage category III according to IEC 60664 with degree of pollution 3 rated value	50 V
surge voltage resistance rated value	2.5 kV
flammability class of enclosure material	UL94 V-0
shock resistance	
● according to IEC 60068-2-27	sinusoidal half-wave 15 g / 11 ms
vibration resistance	
● according to IEC 60068-2-6	6 ... 150 Hz: 2 g
switching frequency	100 Hz
thermal current	5 A
reference code according to IEC 81346-2	K
Substance Prohibitance (day/month/year)	03/25/2015
Net Weight	0.032 kg
Control circuit/ Control	
control supply voltage at DC rated value	11 ... 30 V
operating range factor control supply voltage rated value at DC	
● initial value	1
● full-scale value	1
minimum switching voltage when switching on	11 V
maximum switching voltage when switching off	5 V
ON-delay time	
● at DC maximum	0.2 ms
OFF-delay time maximum	0.3 ms
Mechanical data	
product component plug-in socket	No
Auxiliary circuit	

Subject to change without notice
© Copyright Siemens

type of switching contact	NO contact
number of NO contacts for auxiliary contacts	1
Main circuit	
type of voltage	DC
Inputs/ Outputs	
property of the output short-circuit proof	Yes
switching voltage of the semiconductor output at DC	10 ... 30 V
ampacity of the semiconductor output at DC	5 mA
Electromagnetic compatibility	
EMC emitted interference according to IEC 60947-1	ambience A (industrial sector)
EMC immunity according to IEC 60947-1	corresponds to degree of severity 3
conducted interference	
● due to burst according to IEC 61000-4-4	2 kV
● due to conductor-earth surge according to IEC 61000-4-5	2 kV
● due to conductor-conductor surge according to IEC 61000-4-5	1 kV
field-based interference according to IEC 61000-4-3	10 V/m
electrostatic discharge according to IEC 61000-4-2	6 kV contact discharge / 8 kV air discharge
Display	
display version as status display by LED	LED green
Connections/ Terminals	
product function removable terminal	No
type of electrical connection	
● for auxiliary and control circuit	screw-type terminals
type of connectable conductor cross-sections	
● solid	1x (0.25 ... 2.5 mm²)
● finely stranded with core end processing	1x (0.25 ... 1.5 mm²)
● for AWG cables solid	1x (20 ... 14)
connectable conductor cross-section	
● solid	0.25 ... 2.5 mm²
● finely stranded with core end processing	0.25 ... 1.5 mm²
AWG number as coded connectable conductor cross section	
● solid	20 ... 14
tightening torque with screw-type terminals	0.5 ... 0.6 N·m
Installation/ mounting/ dimensions	
mounting position	any
fastening method	snap-on mounting
height	93 mm
width	6.2 mm
depth	72.5 mm
required spacing	
● with side-by-side mounting	
— forwards	0 mm
— backwards	0 mm
— upwards	0 mm
— downwards	0 mm
— at the side	0 mm
● for grounded parts	
— forwards	0 mm
— backwards	0 mm
— upwards	0 mm
— at the side	0 mm
— downwards	0 mm
● for live parts	
— forwards	0 mm
— backwards	0 mm
— upwards	0 mm
— downwards	0 mm

Subject to change without notice
© Copyright Siemens

— at the side	0 mm

Ambient conditions

installation altitude at height above sea level maximum	2 000 m
ambient temperature	
● during operation	-25 ... +60 °C
● during storage	-40 ... +85 °C
● during transport	-40 ... +85 °C
relative humidity during operation	10 ... 95 %

Approvals Certificates

Environment	General Product Approval				
Environmental Confirmations	CSA	c UL us	UL	EAC	UKCA

EMV		Test Certificates	Maritime application	other
KC	RCM	Type Test Certificates/Test Report	DNV	Confirmation

Further information

Information on the packaging
https://support.industry.siemens.com/cs/ww/en/view/109813875
Information for data generation and storage
https://support.industry.siemens.com/cs/ww/en/view/109995012
Information- and Downloadcenter (Catalogs, Brochures,…)
https://www.siemens.com/ic10
Industry Mall (Online ordering system)
https://mall.industry.siemens.com/mall/en/en/Catalog/product?mlfb=3RQ3055-1SM30
Cax online generator
https://support.automation.siemens.com/WW/CAXorder/default.aspx?lang=en&mlfb=3RQ3055-1SM30
Service&Support (Manuals, Certificates, Characteristics, FAQs,...)
https://support.industry.siemens.com/cs/ww/en/ps/3RQ3055-1SM30
Image database (product images, 2D dimension drawings, 3D models, device circuit diagrams, EPLAN macros, ...)
https://www.automation.siemens.com/bilddb/cax_de.aspx?mlfb=3RQ3055-1SM30&lang=en

Subject to change without notice
© Copyright Siemens

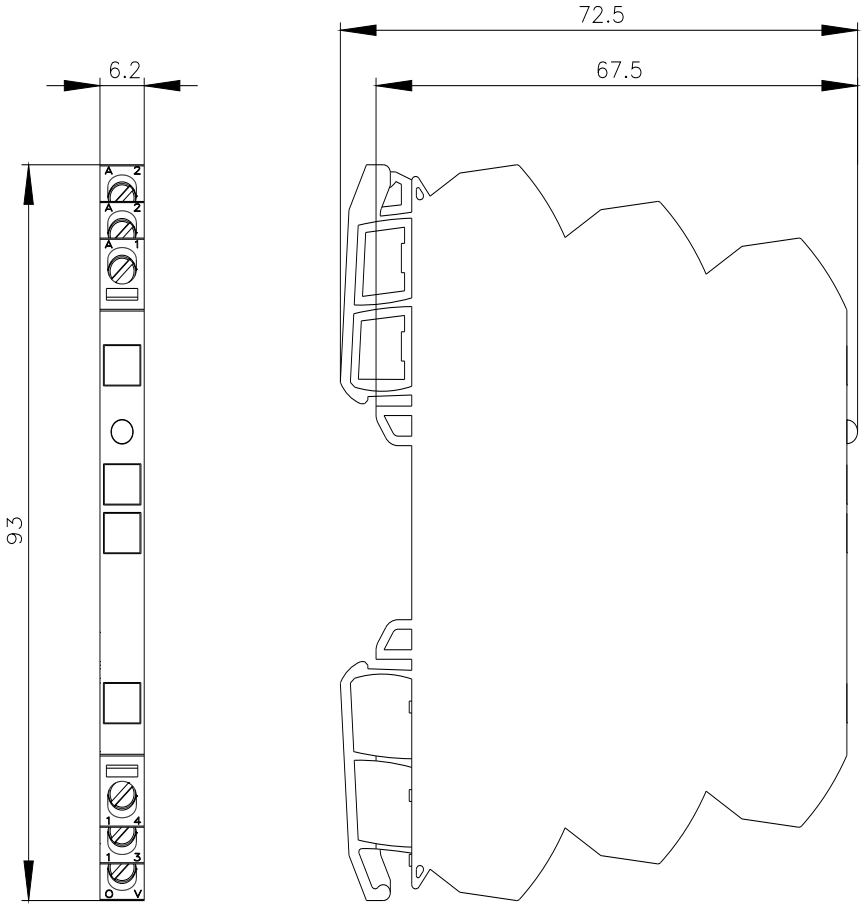

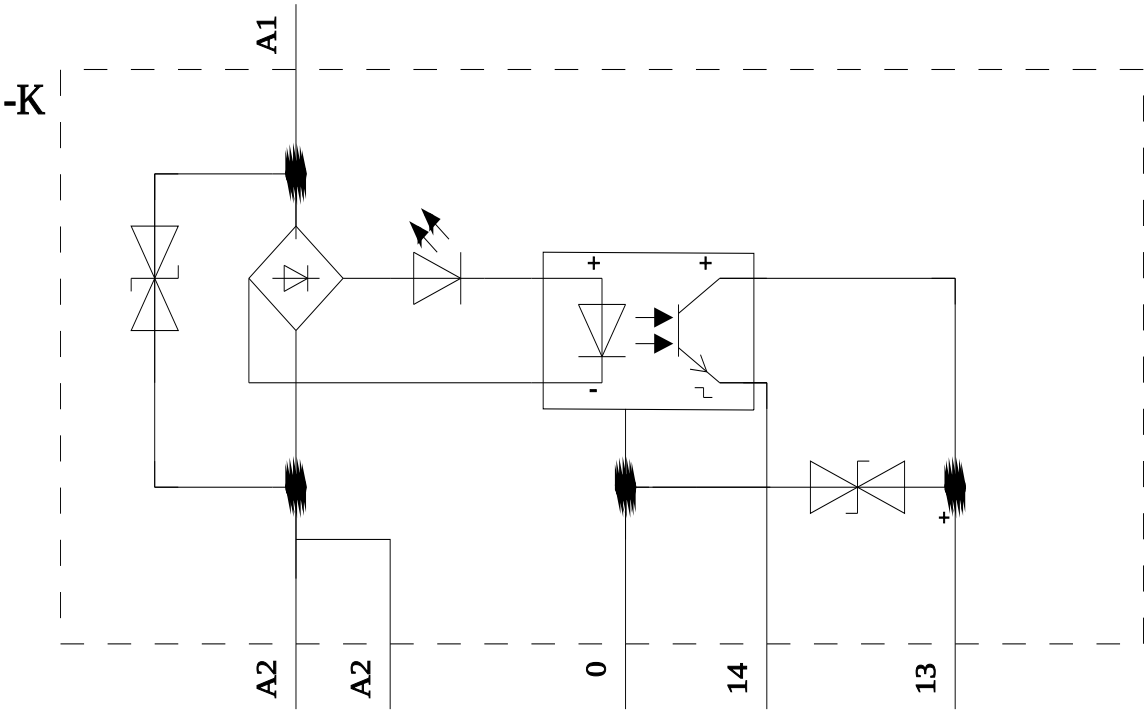

last modified: 4/9/2026

Subject to change without notice
© Copyright Siemens

Subject to change without notice
© Copyright Siemens