REVISIONS				
EC NO	DATE	REV	DESCRIPTION	CHANGER
CY19-5238	2019/4/8	C	CHANGE CABLE OD FROM 4.5 TO 5.5	CISSY
CY19-5490	2019/6/17	D	DELETE NOTE 3.3	CISSY
CY19-5566	2019/7/13	E	ADD PART NO.	CISSY

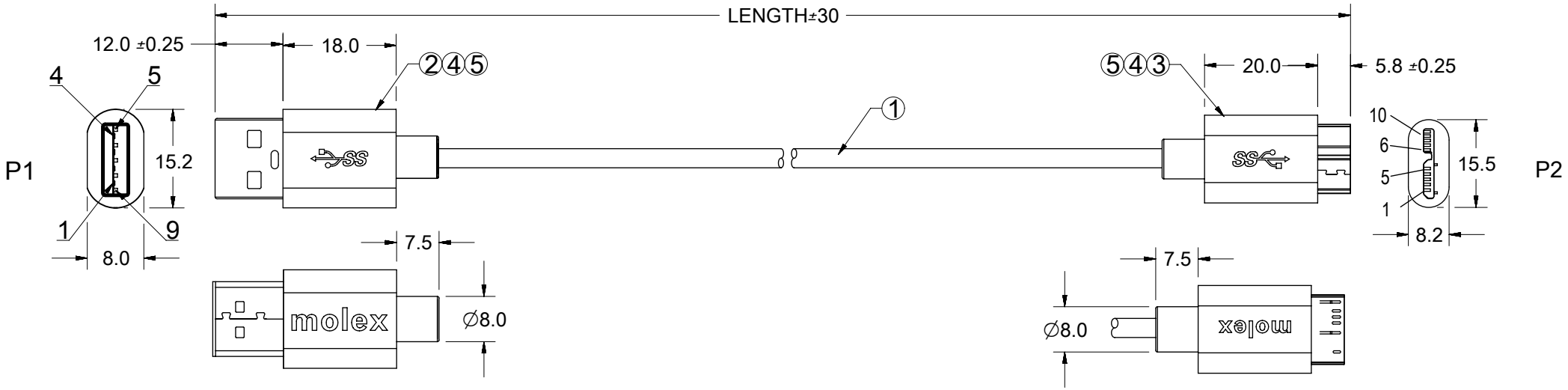

PART NO.	LENGTH	DESCRIPTION	CABLE OD
687890041	L=1000MM	USB3.0 A to USB3.0 MicroB L=1M	30+30+24,OD5.5MM
687890042	L=1500MM	USB3.0 A to USB3.0 MicroB L=1.5M	28+28+22,OD5.5MM
687890043	L=2000MM	USB3.0 A to USB3.0 MicroB L=2M	28+28+22,OD5.5MM
687890045	L=500MM	USB3.0A TO USB3.0 MICRO B L=0.5M	30+30+24,OD5.5MM

C

E

WIRING CHART			
P1	SIGNAL NAME	WIRE COLOR	P2
1	VBUS	RED	1
2	D-	WHITE	2
3	D+	GREEN	3
4	GND	BLACK	5
5	STD_SSRX-	BLUE	6
6	STD_SSRX+	YELLOW	7
7	GND_DRAIN	GND_DRAIN	8
8	STD_SSTX-	PURPLE	9
9	STD_SSTX+	ORANGE	10
SHELL	SHIELD	BRAID	SHELL

5	OUTMOLDED PVC BLACK	A/R
4	INNER MOLDED LDPE	A/R
3	USB 3.0MIRCO B TYPE PLUG, CONTACTS: GOLD 1u" PLATED,SHELL: NICKEL PLATED,	1
2	USB3.0 A TYPE PLUG, CONTACTS: GOLD 1u" PLATED,SHELL: NICKEL PLATED,	1
1	USB3.0 CABLE JACKET BLACK	1
ITEM	DESCRIPTION	QTY'

NOTE:
1.OVERMOLDING SPECIFICATION:
1.1 INNER MOLDING: PE RESIN
1.2 OUTER MOLDING: PVC RESIN
2.APPLICATION CONDITION
2.1 WORKING TEMPERATURE: 0°--- +50°
2.2 STORAGE TEMPERATURE: -20°--- +60°
3.ELECTRICAL PERFORMACNE
3.1 CURRENT RATING:1.8A FOR POWER WIRE/ 0.25A FOR SIGNAL WIRE
3.2 VOLTAGE RATING:30V AC
4. THIS PRODUCT MUST MEET THE EU RoHS CHEMICAL SUBSTANCES SPECIFICATION FOR PRODUCTS (2011/65/EU).

SYMBOLS
= 0
= 0
= 0
= 0
= 0
= 0
= 0
= 0
= 0

THIS DRAWING CONTAINS INFORMATION THAT IS PROPRIETARY TO MOLEX ELECTRONIC TECHNOLOGIES, LLC AND SHOULD NOT BE USED WITHOUT WRITTEN PERMISSION

DIMENSION UNITS	SCALE
mm	1:1

GENERAL TOLERANCES (UNLESS SPECIFIED)		
ANGULAR TOL	±	°
4 PLACES	±	
3 PLACES	±	
2 PLACES	±	0.25
1 PLACE	±	0.5
0 PLACES	±	

DRAFT WHERE APPLICABLE MUST REMAIN WITHIN DIMENSIONS

CURRENT REV DESC:

EC NO: 620785
DRWN: ZZXIAN 2019/07/08
CHK'D: CWANG49 2019/07/17
APPR: LHLIU 2019/07/17

INITIAL REVISION:
DRWN: ZZXIAN 2018/08/16
APPR: LHLIU 2018/09/14

molex

USB3.0 A TO USB3.0 MICRO B

PRODUCT CUSTOMER DRAWING

DOCUMENT NUMBER	DOC TYPE	DOC PART	REVISION
2012410606	PSD	000	E

THIRD ANGLE PROJECTION	DRAWING	SERIES	MATERIAL NUMBER	CUSTOMER	SHEET NUMBER
	A4-SIZE	201241	SEE TABLE	GENERAL MARKET	1 OF 1

DOCUMENT STATUS	P1	RELEASE DATE	2019/07/17 03:12:25

FORMAT: master-tb-prod-A4
REVISION: H
DATE: 2018/01/18