CHARACTERISTICS					
PARAMETER	MIN	TYP	MAX	UNITS	CONDITIONS/REMARKS
SUPPLY VOLTAGE	5.4		13.2	VOLTS	-25°C TO 85°C
SUPPLY CURRENT		8.0	20	mA	MAX @ -25°C, TYP @ 25°C, Vs=8.0V, EXCLUDES LOAD
OUTPUT CURRENT	1	13		mA	SINKING OR SOURCING
OUTPUT VOLTAGE SWING	(-V)+1.25		(+V)-1.25	VOLTS	MAX CLAMPED @ 9.0 VOLTS MIN
SENSITIVITY	15.1		17.2	mV/NI	@ Vs=8.0V & 25°C 5
LINEARITY		.5	1.0	% OF SPAN	DEV FROM STR LINE FROM -1 MAX TO +1 MAX 1
Vout @ Ø NULL	.5(Vs)-2%		.5(Vs)+2%	VOLTS	25°C
TEMP ERROR-NULL	-.02		+.02	%/°C	-25°C TO 85°C
TEMP ERROR-GAIN	-.06		+.01	5/°C	-25°C TO 85°C

CSLA2DGI

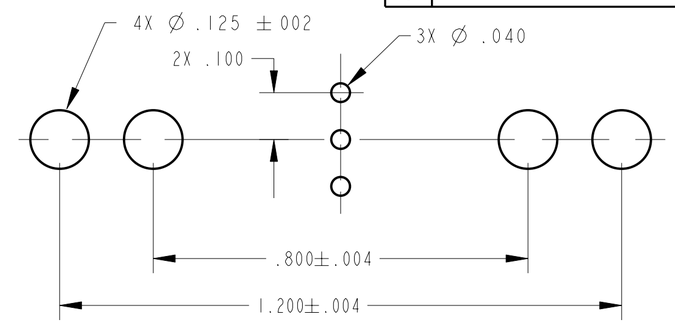

SUGGESTED HOLE CENTERS
SCALE 4:1

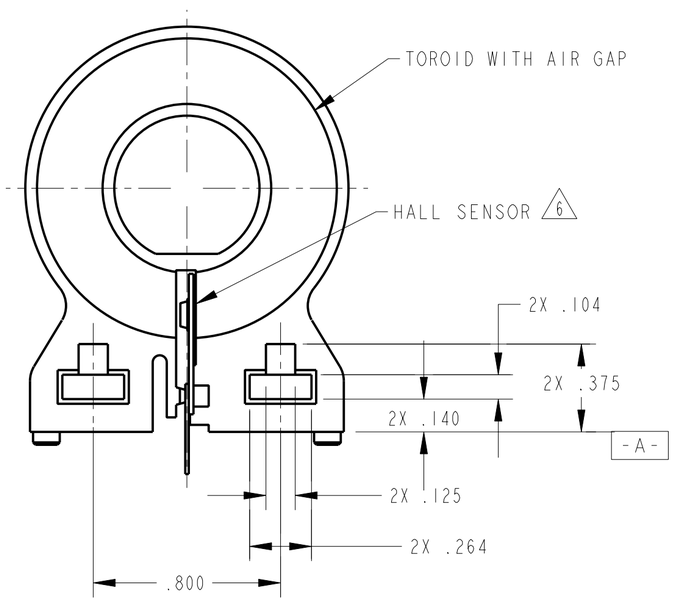

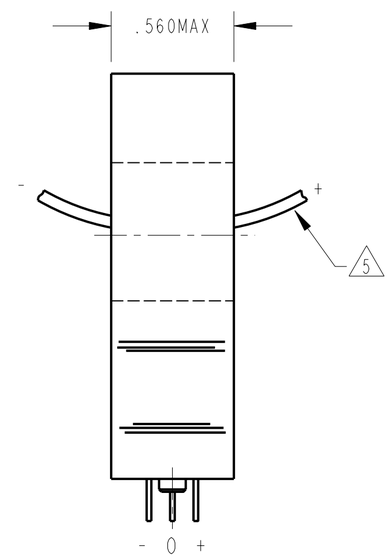

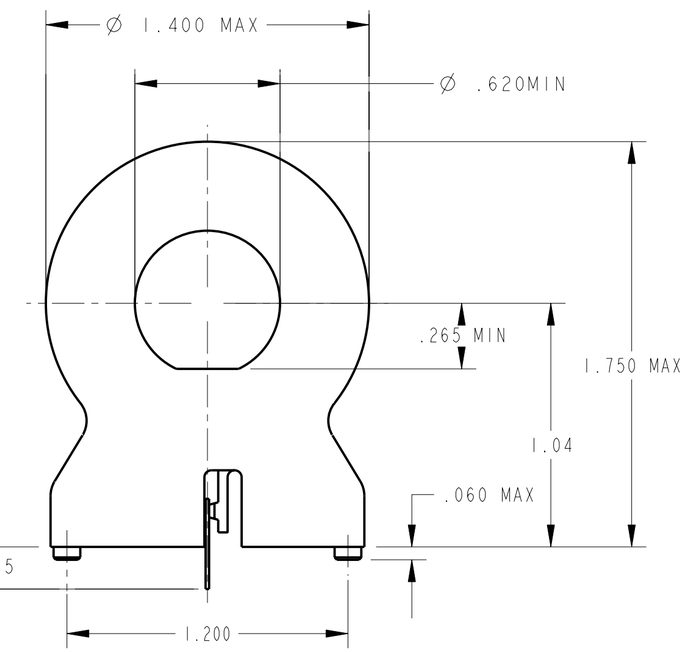

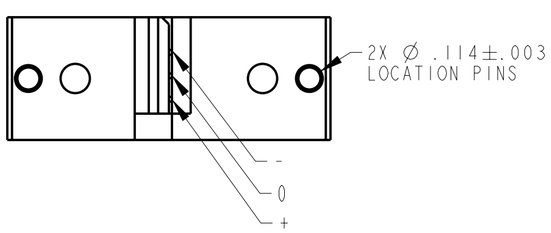

NOTES
1. SUGGESTED I MAX FOR LINEAR OPERATION IS 150 AMPS
2 - RECOMMENDED MOUNTING IS 4-40 SQUARE NUT AND .375 LONG 4-40 SCREW
3 - CONVENTIONAL CURRENT FLOW IN DIRECTION INDICATED WILL CAUSE AN INCREASE IN OUTPUT VOLTAGE
4 - THE DEVICE CANNOT BE DAMAGED BY MAGNETIC OVERDRIVE
5. AT Vs OTHER THAN 8.0 VOLTS, SENSITIVITY = (NUMBER SHOWN) X Vs/8
6. GROUND PLANE ON BACKSIDE OF THE CERAMIC IS ELECTRICALLY CONNECTED TO THE (-) TERMINAL
7 - SENSOR COATED WITH HUMISEAL
8 - CORE TO BE VISUALLY CENTERED ABOUT SENSOR

THIRD ANGLE PROJECTION
SCALE 2 : 1
DO NOT SCALE PRINT

UNLESS OTHERWISE SPECIFIED TOLERANCES ARE

ONE PLACE	(.0)	±.030
TWO PLACES	(.00)	±.015
THREE PLACES	(.000)	±.005
ANGLES		±

WEIGHT

THIS DRAWING COVERS A PROPRIETARY ITEM AND IS THE PROPERTY OF MICRO SWITCH. A DIVISION OF HONEYWELL. THIS DRAWING IS NOT TO BE COPIED OR USED WITHOUT THE APPROVAL OF MICRO SWITCH.

MICRO SWITCH a Honeywell Division
FED. MFG. CODE 91929

CURRENT SENSOR

CATALOG LISTING
CSLA2DGI

ANSI Y14.5M-1982 APPLIES

CSLA2DGI
PAGE 1 OF 1
RELEASE NO. PR-22035
REPLACES
DRAWING NUMBER
ISSUE 2
CHECK
REVISIONS
A 200456 LJK 26 MAY 00
CHECK
26 MAY 00
SAV
CHECK
26 MAY 00
PTC/CAD 2D
DRAWN LJK 26 MAY 00