Aavid Confidential

THE INFORMATION CONTAINED IN THIS DRAWING IS THE SOLE PROPERTY OF AAVID, A THERMAL DIVISION OF BOYD CORPORATION. ANY REPRODUCTION IN PART OR AS A WHOLE WITHOUT THE WRITTEN PERMISSION OF AAVID, A THERMAL DIVISION OF BOYD CORPORATION IS PROHIBITED.

THIS DRAWING IS CONTROLLED BY A CAD MODEL. IF IN DOUBT, PLEASE ASK.

REVISION HISTORY

REV	ZONE	REASON FOR CHANGE	REVISED BY	REV DATE	APPROVED BY	DATE APPROVED
A	-	RELEASE TO PROTOTYPE	Kelly	5/8/2019	Jim	5/9/2019
B	-	CHANGE DESCRIPTION	Sam	9/19/2019	Jim	9/19/2019

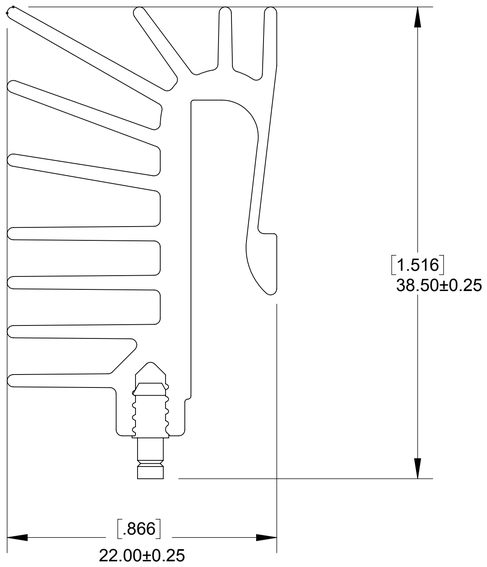

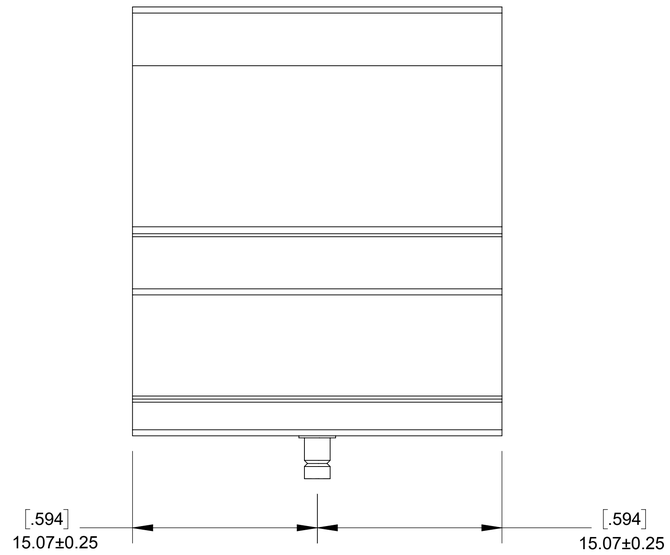

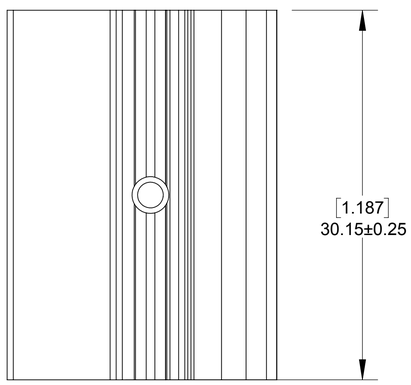

NOTES:
1.) SEE CAD MODEL.
2.) PIN IS CENTERED WITH EXTRUSION WIDTH.

NOTES:

1.未注尺寸公差参考CAD图档
2.钉子居中压进铝挤槽内
3.散热片表面处理：黑色阳极
4.产品不允许有毛刺、脏污等不良

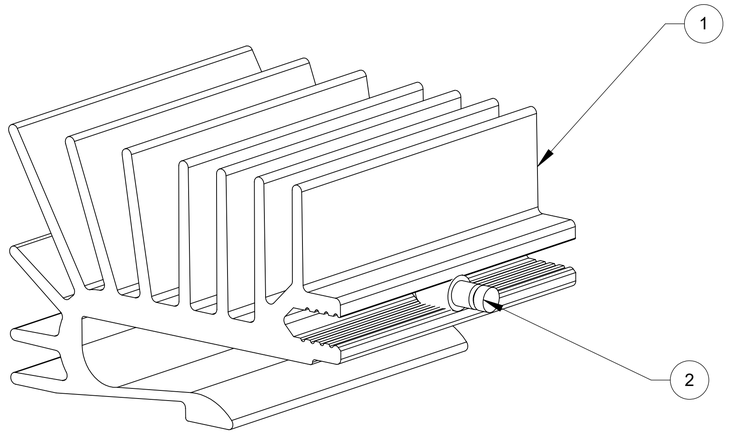

ITEM NO.	PART NUMBER	DESCRIPTION	QTY.
1	78240	EXTRUSION CUT TO 1.187"	1
2	406060	PIN,SHOULDER,.118X0.307, PLTDG	1

RoHS COMPLIANT
PER AAVID SPEC ROHS - 9000

THIRD ANGLE PROJECTION

PART TYPE IS MACHINED
DIMENSIONS ARE IN mm
TOLERANCES UNLESS OTHERWISE SPECIFIED
X ± 0.380
.X ± 0.250
.XX ± 0.125
Angle 1°
REMOVE ALL BURRS
BREAK SHARP EDGES .13 - .38
PART TO BE FREE OF DIRT, OIL, OR DEBRIS
0.8 MACHINED SURFACES

AAVID THERMAL DIVISION OF BOYD CORPORATION
1 Aavid Circle, Laconia, NH 03246, USA
www.boydcorp.com/aavid

DIVISION CODE: LC

DESCRIPTION: M48118B011000G

SIZE: A1

DRAWN BY	DATE	MATERIAL			
Sam Zeng	9/19/2019	AL6063-T5			
CHECKED BY	**DATE**	**FINISH**			
Jim Liu	9/19/2019	BLACK ANODIZE			
APPROVED BY	**DATE**	**SHEET**	**SCALE**	**PART NUMBER**	**REV**
Jim Liu	9/19/2019	1 of 1	1:1	665986	B