	SPECIFICATION CONTROL DRAWING **Crystal Resonator**	**FREQUENCY** 9.843750MHz

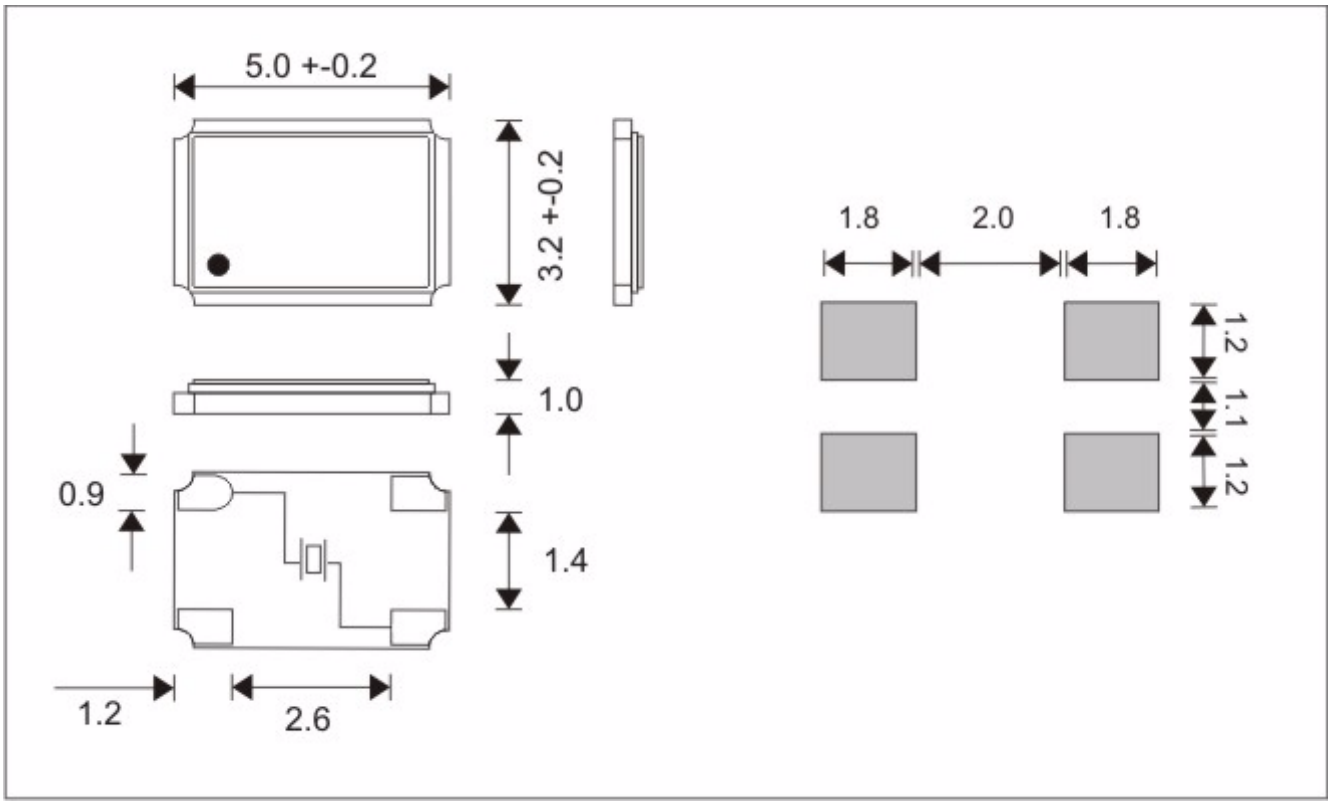

Holder Style	5x32x1 4-Pad
Mode	Fundamental
Adjustment Tolerance	± 20PPM at 25°C
Temperature Stability	± 20 PPM
Operating Temp. Range	-20°C to +70°C
Load Capacitance	20 pF
ESR	80 Ohm
Marking	AEL 9.84375 WWYY

Amdt Date	Change Note	AEL Code	
		X9M843750S007	
		Issue Ref	B

© Not to be reproduced without permission from AEL Crystals Ltd