	SPECIFICATION CONTROL DRAWING **Crystal Resonator**	**FREQUENCY** 8.192000MHz

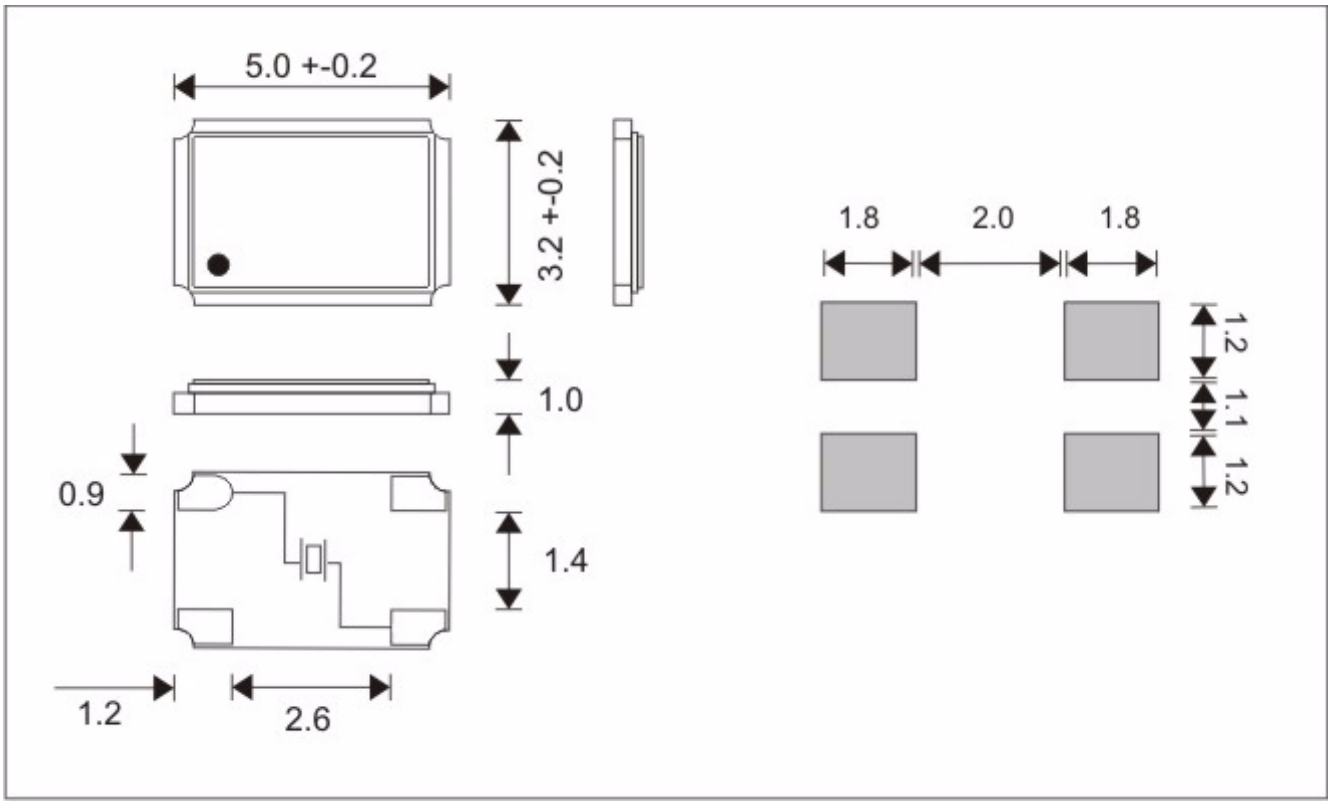

Holder Style	5x32x1 4-Pad
Mode	Fundamental
Adjustment Tolerance	± 30PPM at 25°C
Temperature Stability	± 50 PPM
Operating Temp. Range	-40°C to +85°C
Load Capacitance	12 pF
ESR	150 Max Ohm
Static Capacitance (C0)	Unspecified pF
Ageing	+/-5PPM 1st Year
Marking	AEL 8.00WW/YY

Amdt Date	Change Note	AEL Code	
		X8M192000S011	
		Issue Ref	A

© Not to be reproduced without permission from AEL Crystals Ltd