Tuesday, January 20, 2004 13:23:18

SD-38002-016

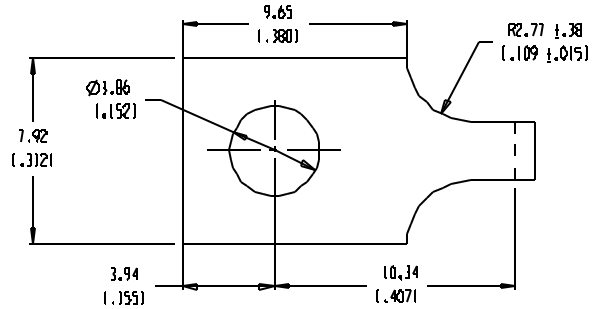

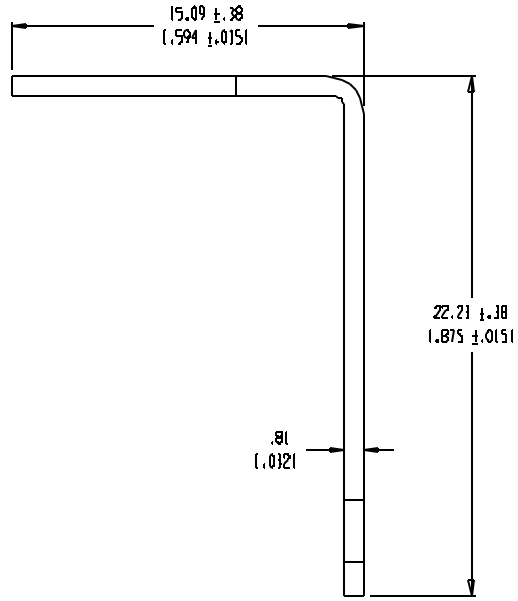

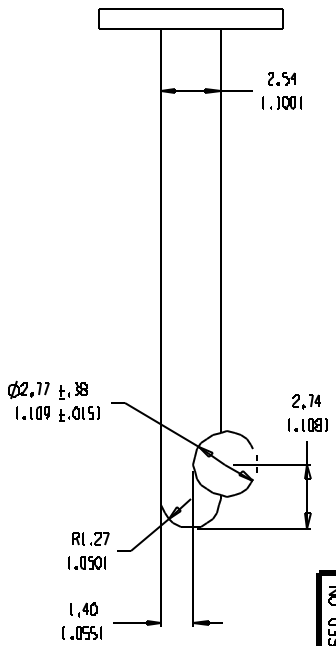

NOTES:

1. MATERIAL: SEE TABLE
2. FINISHES: SEE TABLE
3. PRODUCT SPECIFICATION: NOT REQUIRED
4. PACKAGING: NOT REQUIRED
5. MATES WITH: NONE
6. USED WITH: 1800 & 1900 SERIES TERMINAL STRIPS.

ITEM	QTY.	DESCRIPTION	MATERIAL NO.	MATERIAL	FINISH
1	1	TERMINAL	38002-0257	BRASS	TIN

RELEASED ON
EC NO. ECO 11412
DRAWN: WH 11/25/03
CH'K:
APPR:
REV A
DESCRIPTION

QUALITY SYMBOLS
MAJOR
CRITICAL C
SPC S

GENERAL TOLERANCES: (UNLESS SPECIFIED)

	mm	INCH
4 PLACES		±.0015
3 PLACES	±.038	±.005
2 PLACES	±.13	±.01
1 PLACE	±.3	
ANGULAR:	±2°	

DRAFT WHERE APPLICABLE MUST REMAIN WITHIN DIMENSIONS

SCALE 5:1
DESIGN UNITS ☐ mm ☒ INCH
THIRD ANGLE PROJECTION
DRAWN BY & DATE W. HOWARD 11/25/03
CHECKED BY & DATE
APPROVED BY & DATE
CAD FILENAME 1804-0401

PROJECT NO. -
DIMENSIONS: ☒ mm/INCH ☐ INCH/mm ☐ mm ONLY
SHT -
REV -
REVISE ON CAD ONLY

TITLE:
TERMINAL, SOLDER Y
(CAT #183)

MOLEX INCORPORATED

MATERIAL NO. SEE TABLE
DRAWING NO. SD-38002-016
SHEET NO. 1 OF 1
SIZE B

THIS DRAWING CONTAINS INFORMATION THAT IS PROPRIETARY TO MOLEX INCORPORATED AND SHOULD NOT BE USED WITHOUT WRITTEN PERMISSION.