THIS DRAWING IS UNPUBLISHED. RELEASED FOR PUBLICATION -,- .
© COPYRIGHT - By - ALL RIGHTS RESERVED.

| LOC | DIST |
|---|---|
| AD | 00 |

REVISIONS

| P | LTR | DESCRIPTION | DATE | DWN | APVD |
|---|---|---|---|---|---|
| | A1 | REVISED PER ECO-11-004917 | 11MAR11 | RK | HMR |

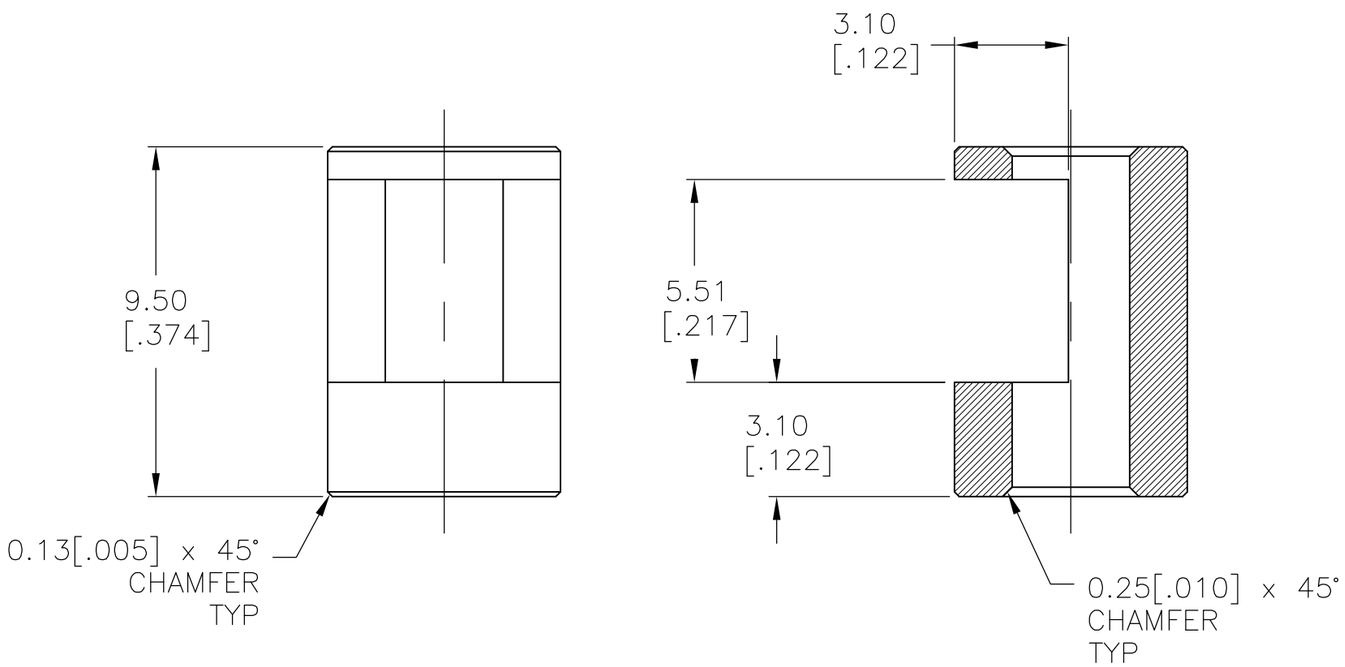


1 BRASS

2 NICKEL PLATE ELECTRODEPOSITED

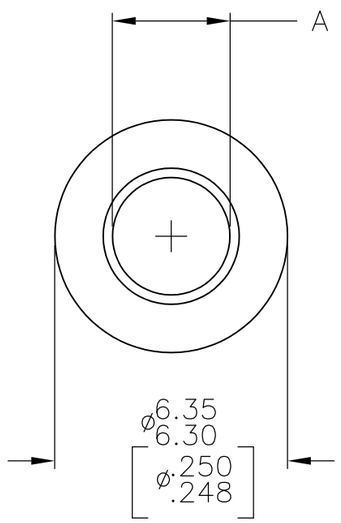


| A | FINISH | MATERIAL | ALCO P/N | P/N |
|---|---|---|---|---|
| $4.09^{+0.08}_{-0.0}$ [$.161^{+.003}_{-.000}$] | 2 | 1 | KR-304 | 1825620-3 |
| $4.83^{+0.08}_{-0.0}$ [$.190^{+.003}_{-.000}$] | 2 | 1 | KR-204 | 1825620-2 |
| $3.20^{+0.08}_{-0.0}$ [$.126^{+.003}_{-.000}$] | 2 | 1 | KR-104 | 1825620-1 |

THIS DRAWING IS A CONTROLLED DOCUMENT.

DIMENSIONS: mm [INCHES]

TOLERANCES UNLESS OTHERWISE SPECIFIED:

| | |
|---|---|
| 0 PLC | ± - |
| 1 PLC | ± - |
| 2 PLC | ± 0.13[.005] |
| 3 PLC | ± - |
| 4 PLC | ± - |
| ANGLES | ± 5° |

MATERIAL: SEE TABLE

FINISH: SEE TABLE

DWN M.BINNER 18OCT2007
CHK M.WILBOURN 18OCT07
APVD M.WILBOURN 18OCT07
PRODUCT SPEC —
APPLICATION SPEC —
WEIGHT —

TE Connectivity

NAME: SHAFT ADAPTER —

| SIZE | CAGE CODE | DRAWING NO | RESTRICTED TO |
|---|---|---|---|
| A3 | 00779 | C-1825620 | — |

CUSTOMER DRAWING

SCALE 8:1 SHEET 1 OF 1 REV A1