THIS DRAWING IS UNPUBLISHED. RELEASED FOR PUBLICATION 2011
© COPYRIGHT 2011 - ALL RIGHTS RESERVED.

LOC	DIST
AI	-

REVISIONS

P	LTR	DESCRIPTION	DATE	DWN	APVD
	B	REVISED PER ECO-12-005569	22MAR2012	HRY	MS

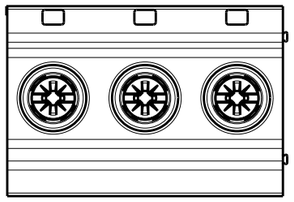

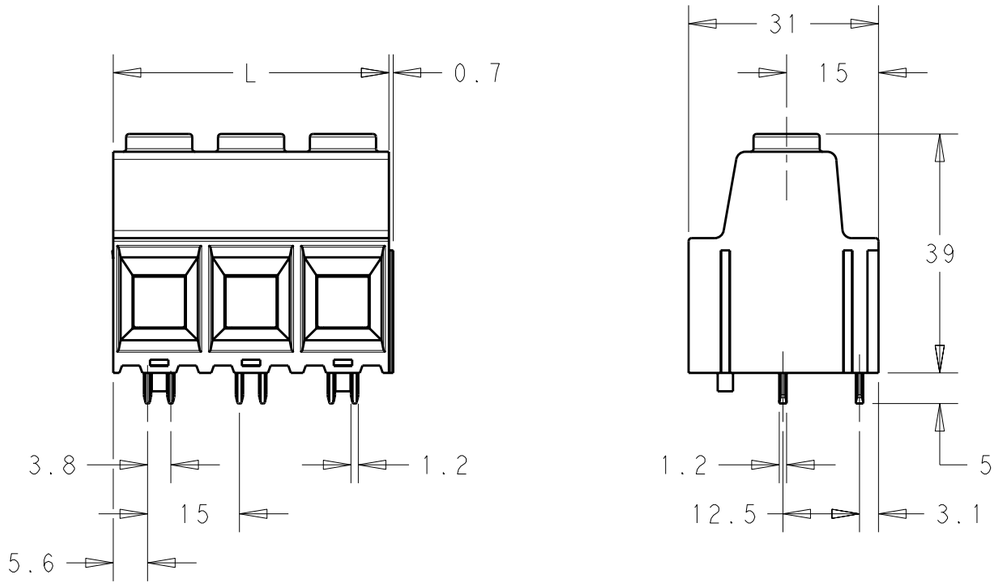

MATERIALS:
HOUSING-POLYAMIDE, COLOR-GREEN
SCREW- M5,NICKEL PLATED STEEL.
CLAMP- TIN PLATED STEEL.
PIN-TIN OVER NICKEL PLATED COPPER ALLOY.

MECHANICAL:
PCB THICKNESS-2.40 MAX
PCB HOLE DIAMETER-1.60 MIN
STRIP LENGTH-18 MM
OPERATING TEMPERATURE--40°C TO +110°C
TORQUE-2.1~2.5 Nm.

ELECTRICAL:
WIRE RANGE- 20 TO 1 AWG
VOLTAGE RATING- 600 VOLTS
CURRENT RATING-130 AMP FIELD WIRING; 135 AMP FACTORY WIRING
CONTACT RESISTANCE-15 MILLOHM MAX
INSULATION RESISTANCE-10^9 OHMS MIN (500V DC)

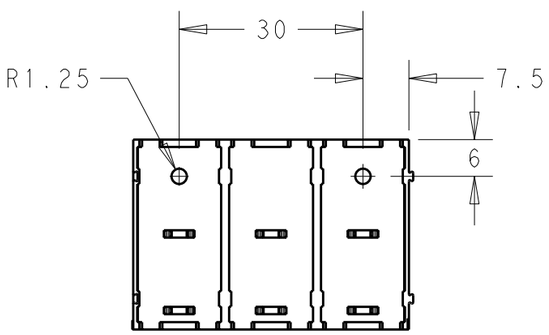

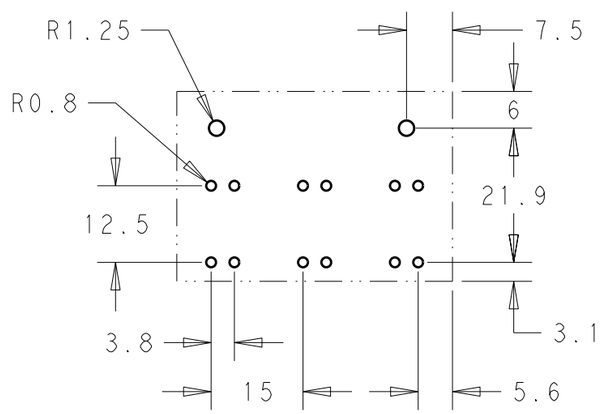

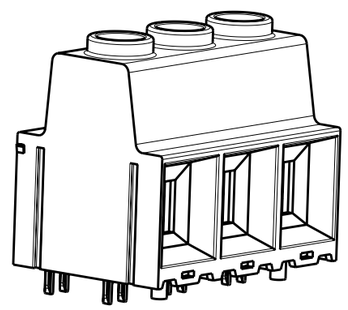

SCALE 1:1
-3 AS SHOWN

DIM L	POLE	PART NUMBER
180.00	12	1-1986714-2
165.00	11	1-1986714-1
150.00	10	1-1986714-0
135.00	9	1986714-9
120.00	8	1986714-8
105.00	7	1986714-7
90.00	6	1986714-6
75.00	5	1986714-5
60.00	4	1986714-4
45.00	3	1986714-3
30.00	2	1986714-2

THIS DRAWING IS A CONTROLLED DOCUMENT.

DIMENSIONS: mm

TOLERANCES UNLESS OTHERWISE SPECIFIED:
0 PLC ±-
1 PLC ±0.40
2 PLC ±0.20
3 PLC ±-
4 PLC ±-
ANGLES ±1°

MATERIAL -
FINISH -

DWN RAGHAVENDRA 05SEP2011
CHK SARVER MICHAEL 05SEP2011
APVD SARVER MICHAEL 05SEP2011
PRODUCT SPEC -
APPLICATION SPEC -
WEIGHT -

TE Connectivity

NAME POWER TERMINAL BLOCK, SOLDERABLE UP TO 275DEG C DOUBLE PIN MODULAR 02 - 12 POLES PITCH 15.00mm WITH PEG

SIZE	CAGE CODE	DRAWING NO	RESTRICTED TO
A3	00779	C-1986714	-

CUSTOMER DRAWING
SCALE 1:1 SHEET 1 OF 1 REV B

1470-19 (3/11)

Pro/ENGINEER DRAWING