A2C25S12M3-F

ACEPACK™ 2 converter inverter brake, 1200 V, 25 A trench gate field-stop IGBT M series, soft diode and NTC

Datasheet - production data

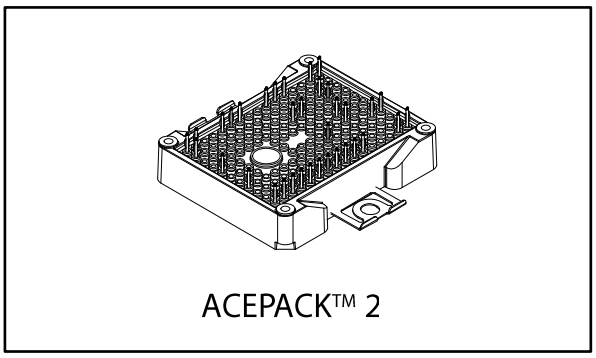

Figure 1: Internal electrical schematic

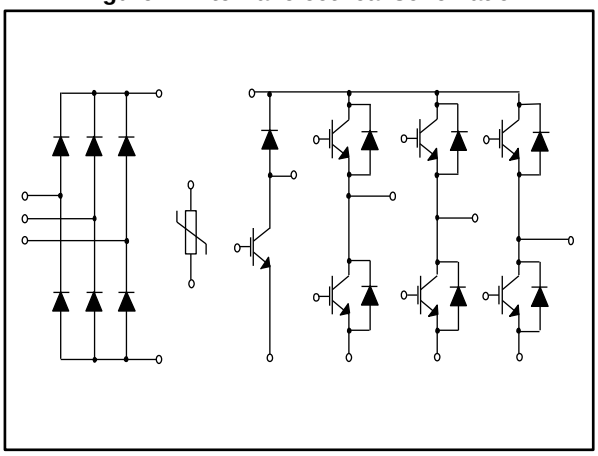

Features

- ACEPACK™ 2 power module
  - DBC Cu Al_2O_3 Cu
- Converter inverter brake topology
  - 1600 V, very low drop rectifiers for converter
  - 1200 V, 25 A IGBTs and diodes
  - $V_{CE(sat)}$: 1.95 V @ I_C = 25 A
  - Soft and fast recovery diode
- Integrated NTC

Applications

- Inverters
- Motor drives

Description

This power module is a converter-inverter brake (CIB) topology in an ACEPACK™ 2 package with NTC, integrating the advanced trench gate field-stop technology from STMicroelectronics. This new IGBT technology represents the best compromise between conduction and switching loss, to maximize the efficiency of any converter system up to 20 kHz.

Table 1: Device summary

Order code	Marking	Package	Leads type
A2C25S12M3-F	A2C25S12M3-F	ACEPACK™ 2	Press fit pins

This is information on a product in full production. www.st.com

Contents

1 Electrical ratings 3
1.1 Inverter stage 3
1.1.1 IGBTs 3
1.1.2 Diode 5
1.2 Brake stage 6
1.2.1 IGBT 6
1.2.2 Diode 8
1.3 Converter stage 9
1.4 NTC 9
1.5 Package 10
2 Electrical characteristics curves 11
3 Test circuits 14
4 Topology and pin description 15
5 Package information 16
5.1 ACEPACK™ 2 CIB press fit pins package information 17
6 Revision history 19

1 Electrical ratings

1.1 Inverter stage

Limiting values at T_j= 25 °C, unless otherwise specified.

1.1.1 IGBTs

Table 2: Absolute maximum ratings of the IGBTs, inverter stage

Symbol	Description	Value	Unit
V_{CES}	Collector-emitter voltage (V_{GE} = 0)	1200	V
I_C	Continuous collector current at T_c = 100 °C	25	A
I_{CP}[(1)]	Pulsed collector current (t_P = 1 ms)	50	A
V_{GE}	Gate-emitter voltage	± 20	V
P_{TOT}	Total power dissipation IGBT (T_{JMAX} = 175 °C)	197	W
T_{JMAX}	Maximum junction temperature	175	°C
T_{Jop}	Operative temperature range under switching conditions	-40 to 150	°C

Notes:

(1)Pulse width limited by maximum junction temperature.

Table 3: Electrical characteristics of the IGBTs, inverter stage

Symbol	Parameter	Test conditions	Min.	Typ.	Max.	Unit
$V_{(BR)CES}$	Collector-emitter breakdown voltage	I_C = 1 mA, V_{GE} = 0 V	1200			V
$V_{CE(sat)}$	Collector-emitter saturation voltage	V_{GE} = 15 V, I_C= 25 A		1.95	2.45	V
		V_{GE} = 15 V, I_C = 25 A, T_J = 150 °C		2.3		V
$V_{GE(th)}$	Gate threshold voltage	V_{CE} = V_{GE}, I_C = 1 mA	5	6	7	V
I_{CES}	Collector cut-off current	V_{GE} = 0 V, V_{CE} = 1200 V			100	µA
I_{GES}	Gate-emitter leakage current	V_{CE} = 0 V, V_{GE} = ±20 V			±500	nA
C_{ies}	Input capacitance	V_{CE} = 25 V, f = 1 MHz, V_{GE} = 0 V		1550		pF
C_{oes}	Output capacitance			130		pF
C_{res}	Reverse transfer capacitance			65		pF
Q_g	Total gate charge	V_{CC} = 960 V, I_C = 25 A, V_{GE} = ±15 V		80		nC
$t_{d(on)}$	Turn-on delay time	V_{CC} = 600 V, I_C = 25 A, R_G = 15 Ω, V_{GE} = ±15 V, di/dt = 1290 A/µs		109		ns
t_r	Current rise time			15.3		ns
E_{on}(1)	Turn-on switching energy			0.97		mJ
$t_{d(off)}$	Turn-off delay time	V_{CC} = 600 V, I_C = 25 A, R_G = 15 Ω, V_{GE} = ±15 V, dv/dt = 9600 V/µs;		109		ns
t_f	Current fall time			132		ns
E_{off}(2)	Turn-off switching energy			1.36		mJ
$t_{d(on)}$	Turn-on delay time	V_{CC} = 600 V, I_C = 25 A, R_G = 15 Ω, V_{GE} = ±15 V, di/dt = 1274 A/µs, T_J = 150 °C		109		ns
t_r	Current rise time			16.2		ns
E_{on}	Turn-on switching energy			1.49		mJ
$t_{d(off)}$	Turn-off delay time	V_{CC} = 600 V, I_C = 25 A, R_G = 15 Ω, V_{GE} = ±15 V,dv/dt = 8200 V/µs, T_J = 150 °C		122		ns
t_f	Current fall time			216		ns
E_{off}	Turn-off switching energy			1.85		mJ
t_{SC}	Short-circuit withstand time	V_{CC} ≤ 600V, V_{GE} ≤ 15 V, T_{jstart} ≤ 150 °C	10			µs
R_{THj-c}	Thermal resistance junction to case	each IGBT		0.69	0.76	°C/W
R_{THc-h}	Thermal resistance case to heatsink	each IGBT, λ_{grease} = 1 W/(m·°C)		0.79		°C/W

Notes:

(1) Including the reverse recovery of the diode.

(2)Including also the tail of the collector current.

1.1.2 Diode

Limiting values at T_j= 25 °C, unless otherwise specified.

Table 4: Absolute maximum ratings of the diode, inverter stage

Symbol	Parameter	Value	Unit
V_{RRM}	Repetitive peak reverse voltage	1200	V
I_F	Continuous forward current at (T_C = 100 °C)	25	A
I_{FP}(1)	Pulsed forward current	50	A
T_{JMAX}	Maximum junction temperature	175	°C
T_{Jop}	Operative temperature range under switching conditions	-40 to 150	°C

Notes:

(1)Pulse width limited by maximum junction temperature.

Table 5: Electrical characteristics of the diode, inverter stage

Symbol	Parameter	Test conditions	Min.	Typ.	Max.	Unit
V_F	Forward voltage	I_F = 25 A	-	2.95	4.1	V
		I_F = 25 A, T_J = 150 ˚C	-	2.3		
t_{rr}	Reverse recovery time	I_F = 25 A, V_R = 600 V, V_{GE} = ±15 V, di_F/dt = 1290 A/µs	-	190		ns
Q_{rr}	Reverse recovery charge		-	1.53		µC
I_{rrm}	Reverse recovery current		-	29		A
E_{rec}	Reverse recovery energy		-	0.74		mJ
t_{rr}	Reverse recovery time	I_F = 25 A, V_R = 600 V, V_{GE} = ±15 V, di_F/dt = 1274 A/µs, T_J = 150 °C	-	378		ns
Q_{rr}	Reverse recovery charge		-	4.43		µC
I_{rrm}	Reverse recovery current		-	41		A
E_{rec}	Reverse recovery energy		-	2.33		mJ
R_{THj-c}	Thermal resistance junction to case	Each diode	-	1.05	1.16	°C/W
R_{THc-h}	Thermal resistance case to heatsink	Each diode, λ_{grease} = 1 W/(m·°C)	-	0.85		°C/W

1.2 Brake stage

Limiting values at T_j= 25 °C, unless otherwise specified.

1.2.1 IGBT

Table 6: Absolute maximum ratings of the IGBT, brake stage

Symbol	Parameter	Value	Unit
V_{CES}	Collector-emitter voltage (V_{GE} = 0)	1200	V
I_C	Continuous collector current (T_c = 100 °C)	25	A
I_{CP}[(1)]	Pulsed collector current	50	A
V_{GE}	Gate-emitter voltage	±20	V
P_{TOT}	Total power dissipation	197	W
T_{JMAX}	Maximum junction temperature	175	°C
T_{Jop}	Operative temperature range under switching conditions	-40 to 150	°C

Notes:

(1)Pulse width limited by maximum junction temperature.

Table 7: Electrical characteristics of the IGBT, brake stage

Symbol	Parameter	Test conditions	Min.	Typ.	Max.	Unit
$V_{(BR)CES}$	Collector-emitter breakdown voltage	I_C = 1 mA, V_{GE} = 0 V	1200			V
$V_{CE(sat)}$	Collector-emitter saturation voltage	V_{GE} = 15 V, I_C = 25 A		1.95		V
		V_{GE} = 15 V, I_C = 25 A, T_J = 150 ˚C		2.3		
$V_{GE(th)}$	Gate threshold voltage	V_{CE} = V_{GE}, I_C = 1mA	5	6	7	V
I_{CES}	Collector cut-off current	V_{GE} = 0 V, V_{CE} = 1200 V			100	µA
I_{GES}	Gate-emitter leakage current	V_{CE} = 0 V, V_{GE} = ±20 V			± 500	nA
C_{ies}	Input capacitance	V_{CE} = 25 V, f = 1 MHz, V_{GE} = 0 V		1550		pF
C_{oes}	Output capacitance			130		pF
C_{res}	Reverse transfer capacitance			65		pF
Q_g	Total gate charge	V_{CC} = 960 V, I_C = 25 A, V_{GE} = ±15 V		80		nC
$t_{d(on)}$	Turn-on delay time	V_{CC} = 600 V, I_C = 25 A, R_G = 15 Ω, V_{GE} = ±15 V, di/dt = 1290 A/µs		109		ns
t_r	Current rise time			15.3		ns
E_{on}(1)	Turn-on switching energy			0.97		mJ
$t_{d(off)}$	Turn-off delay time	V_{CC} = 600 V, I_C = 25 A, R_G = 15 Ω, V_{GE} = ±15 V, dv/dt = 9600 V/µs;		109		ns
t_f	Current fall time			132		ns
E_{off}(2)	Turn-off switching energy			1.36		mJ
$t_{d(on)}$	Turn-on delay time	V_{CC} = 600 V, I_C = 25 A, R_G = 15 Ω, V_{GE} = ±15 V, di/dt = 1274 A/µs, T_J = 150 °C		109		ns
t_r	Current rise time			16.2		ns
E_{on}	Turn-on switching energy			1.49		mJ
$t_{d(off)}$	Turn-off delay time	V_{CC} = 600 V, I_C = 25 A, R_G = 15 Ω, V_{GE} = ±15 V, dv/dt = 8200 V/µs, T_J = 150 °C		122		ns
t_f	Current fall time			216		ns
E_{off}	Turn-off switching energy			1.85		mJ
t_{SC}	Short-circuit withstand time	V_{CC} ≤ 600 V, V_{GE}≤ 15 V, T_{Jstart} ≤ 150 °C	10			µs
R_{THj-c}	Thermal resistance junction to case	Each IGBT		0.69	0.76	°C/W
R_{THc-h}	Thermal resistance case to heatsink	Each IGBT, λ_{grease} = 1 W/(m·°C)		0.79		°C/W

Notes:

(1)Including the reverse recovery of the diode.

(2)Including the tail of the collector current.

1.2.2 Diode

Table 8: Absolute maximum ratings of the diode, brake stage

Symbol	Parameter	Value	Unit
V_{RRM}	Repetitive peak reverse voltage	1200	V
I_F	Continuous forward current at (T_C = 100 °C)	25	A
I_{FP}[(1)]	Pulsed forward current	50	A
T_{JMAX}	Maximum junction temperature	175	°C
T_{Jop}	Operative temperature range under switching conditions	-40 to 150	°C

Notes:

(1)Pulse width limited by maximum junction temperature.

Table 9: Electrical characteristics of the diode, brake stage

Symbol	Parameter	Test conditions	Min.	Typ.	Max.	Unit
V_F	Forward voltage	I_F = 25 A	-	2.95		V
		I_F = 25 A, T_J = 150 ˚C	-	2.3		
t_{rr}	Reverse recovery time	I_F = 25 A, V_R = 600 V, V_{GE} = ±15 V, di/dt = 1290 A/µs	-	190		ns
Q_{rr}	Reverse recovery charge		-	1.53		µC
I_{rrm}	Reverse recovery current		-	29		A
E_{rec}	Reverse recovery energy		-	0.74		mJ
t_{rr}	Reverse recovery time	I_F = 25 A, V_R = 600 V, V_{GE} = ±15 V, di/dt = 1274 A/µs, T_J = 150 °C	-	378		ns
Q_{rr}	Reverse recovery charge		-	4.43		µC
I_{rrm}	Reverse recovery current		-	41		A
E_{rec}	Reverse recovery energy		-	2.33		mJ
R_{THj-c}	Thermal resistance junction to case	Each diode	-	1.05	1.16	°C/W
R_{THc-h}	Thermal resistance case to heatsink	Each diode, λ_{grease} = 1 W/(m·°C)	-	0.85		°C/W

1.3 Converter stage

Limiting values at T_j= 25 °C, unless otherwise specified.

Table 10: Absolute maximum ratings of the bridge rectifiers

Symbol	Description	Value	Unit
V_{RRM}	Repetitive peak reverse voltage	1600	V
I_F	RMS forward current	50	A
I_{FSM}	Forward surge current tp = 10 ms, T_C = 25 °C	450	A
	Forward surge current tp = 10 ms, T_C = 150 °C	365	
I^2t	tp = 10 ms, T_C = 25 °C	1012	A^2s
	tp = 10 ms, T_C = 150 °C	666	
T_{JMAX}	Maximum junction temperature	175	°C
T_{Jop}	Operative temperature range under switching conditions	-40 to 150	°C

Table 11: Electrical characteristics of the bridge rectifiers

Symbol	Parameter	Test conditions	Min.	Typ.	Max.	Unit
V_F	Forward voltage	I_F = 25 A	-	1.0	1.4	V
		I_F = 25 A, T_J = 150 ˚C	-	0.9		
I_R	Reverse current	T_J = 150 ˚C, V_R = 1600 V	-	1		mA
R_{THj-c}	Thermal resistance junction to case	Each diode	-	1.00	1.10	°C/W
R_{THc-h}	Thermal resistance case to heatsink	Each diode, λ_{grease} = 1 W/(m·°C)	-	0.95		°C/W

1.4 NTC

Table 12: NTC temperature sensor, considered as stand-alone

Symbol	Parameter	Test condition	Min.	Typ.	Max.	Unit
R_{25}	Resistance	T = 25 °C		5		kΩ
R_{100}	Resistance	T = 100 °C		493		Ω
ΔR/R	Deviation of R_{100}		-5		+5	%
$B_{25/50}$	B-constant			3375		K
$B_{25/80}$	B-constant			3411		K
T	Operating temperature range		-40		150	°C

Figure 2: NTC resistance vs. temperature

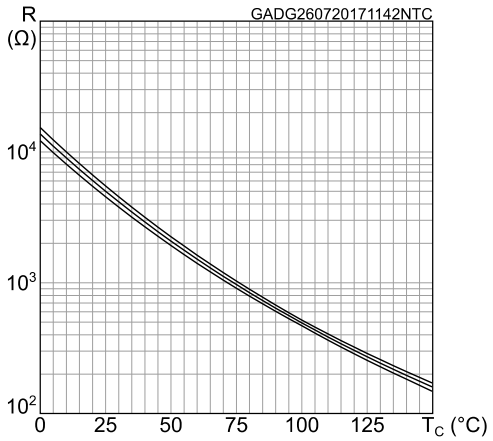

Figure 3: NTC resistance vs. temperature, zoom

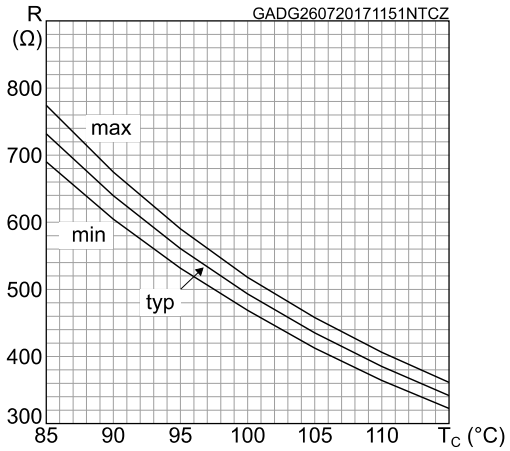

1.5 Package

Table 13: ACEPACK™ 2 package

Symbol	Parameter	Min.	Typ.	Max.	Unit
V_{isol}	Isolation voltage (AC voltage, t = 60 s)			2500	V
M_d	Screw mounting torque	40		80	Nm
T_{stg}	Storage temperature	-40		125	°C
CTI	Comparative tracking index	200			
L_s	Stray inductance module P1 - EW loop		33.5		nH
R_s	Module lead resistance, terminal to chip		3.6		mΩ

2 Electrical characteristics curves

Figure 4: IGBT output characteristics (V_{GE} = 15 V)

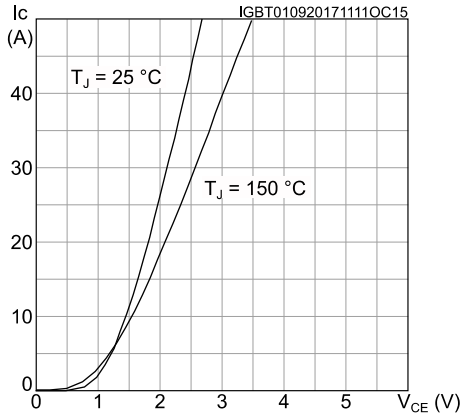

Figure 5: IGBT output characteristics (T_J = 150 °C)

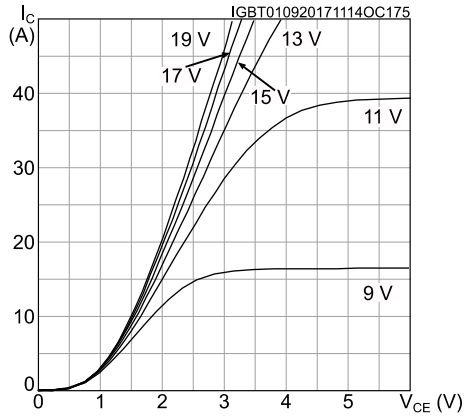

Figure 6: IGBT output characteristics (V_{CE} = 15 V)

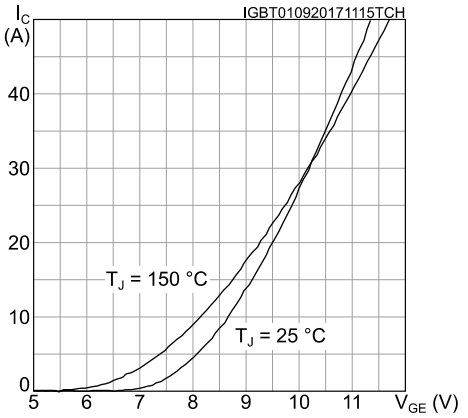

Figure 7: Switching energy vs gate resistance

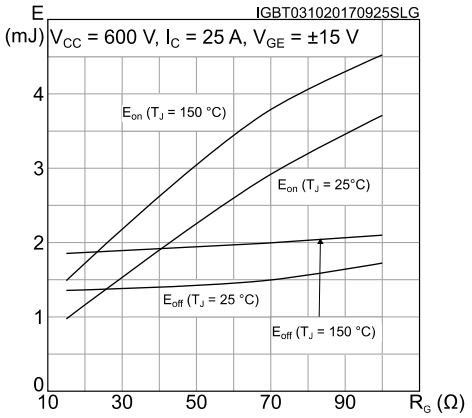

Figure 8: Switching energy vs collector current

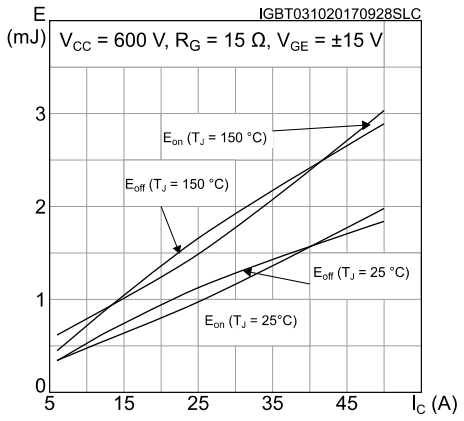

Figure 9: IGBT reverse biased safe operating area (R_{BSOA})

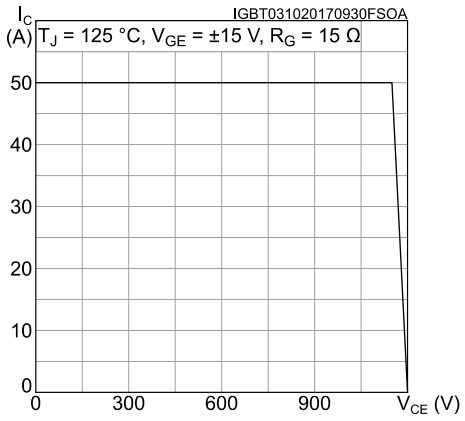

Figure 10: Diode forward characteristics

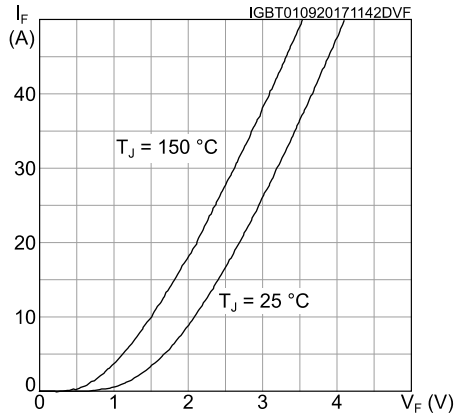

Figure 11: Diode reverse recovery energy vs diode current slope

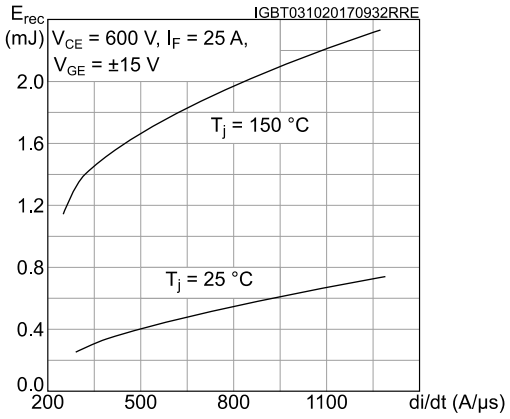

Figure 12: Diode reverse recovery energy vs forward current

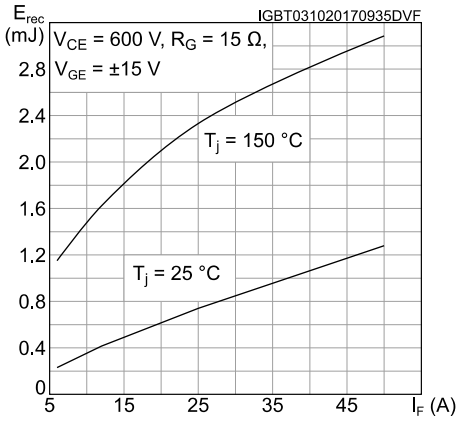

Figure 13: Diode reverse recovery energy vs gate resistance

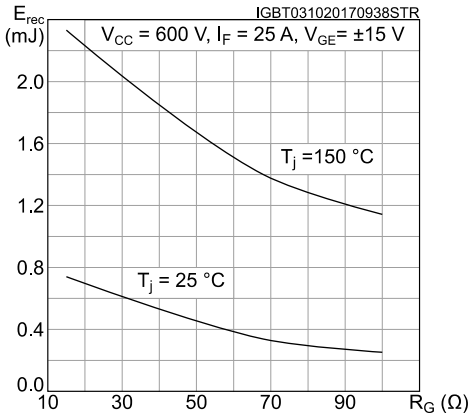

Figure 14: Converter diode forward characteristics

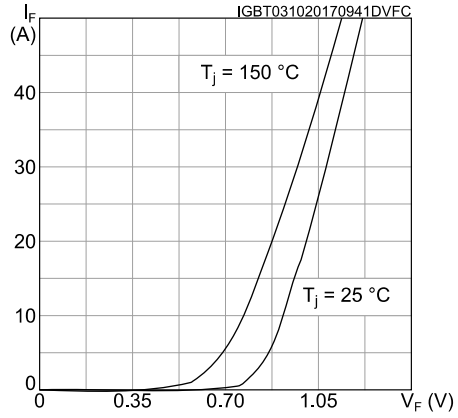

Figure 15: IGBT thermal impedance

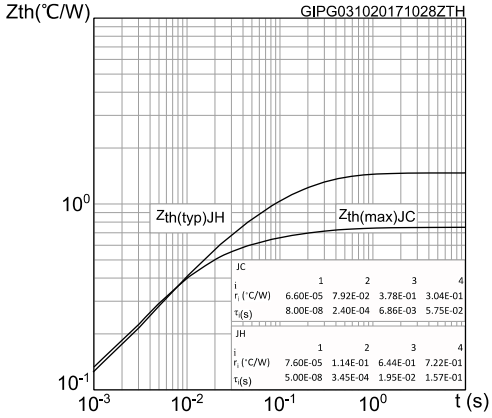

Figure 16: Inverter diode thermal impedance

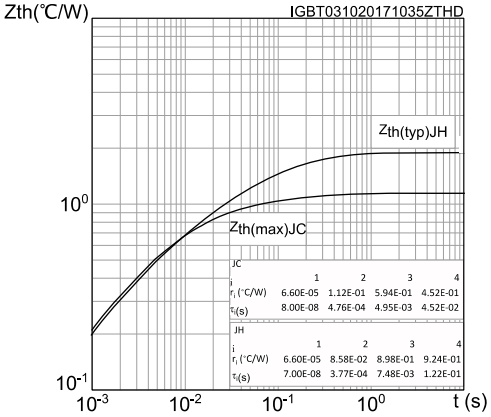

JC				
i	1	2	3	4
r_i (°C/W)	6.60E-05	1.12E-01	5.94E-01	4.52E-01
τ_i(s)	8.00E-08	4.76E-04	4.95E-03	4.52E-02

JH				
i	1	2	3	4
r_i (°C/W)	6.60E-05	8.58E-02	8.98E-01	9.24E-01
τ_i(s)	7.00E-08	3.77E-04	7.48E-03	1.22E-01

3 Test circuits

Figure 17: Test circuit for inductive load switching

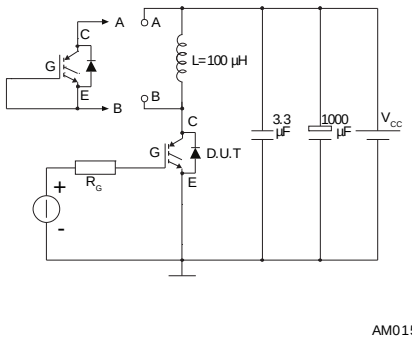

Figure 18: Gate charge test circuit

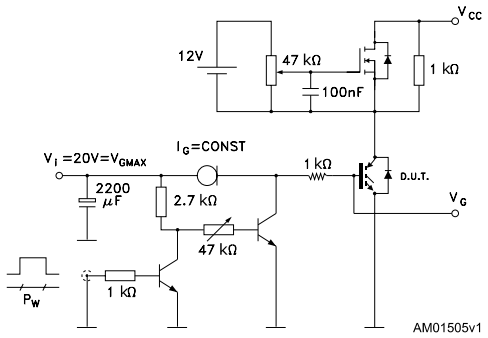

Figure 19: Switching waveform

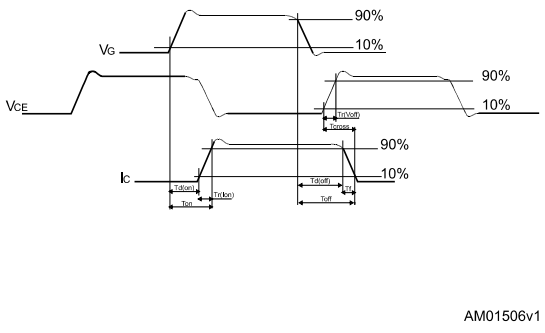

Figure 20: Diode reverse recovery waveform

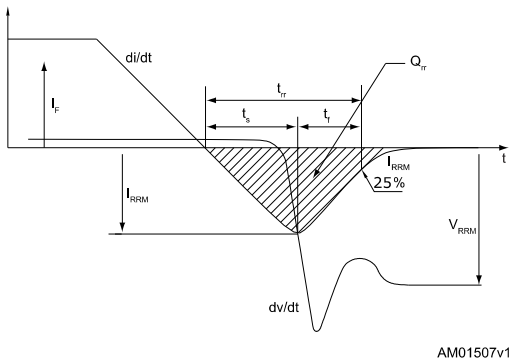

4 Topology and pin description

Figure 21: Electrical topology and pin description

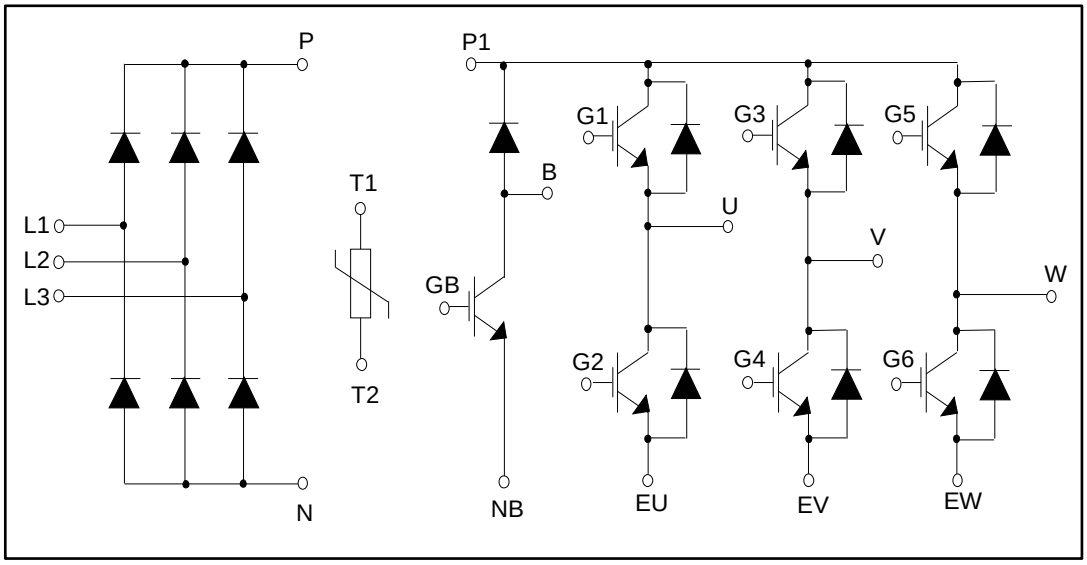

Figure 22: Package top view with CIB pinout

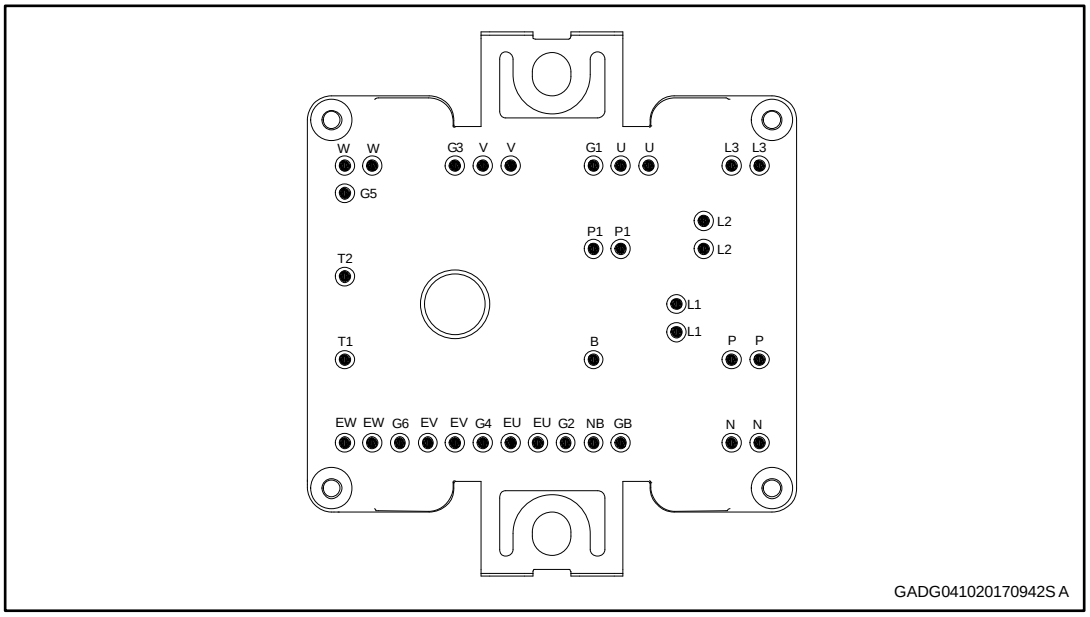

5 Package information

In order to meet environmental requirements, ST offers these devices in different grades of ECOPACK® packages, depending on their level of environmental compliance. ECOPACK® specifications, grade definitions and product status are available at: ***www.st.com***. ECOPACK® is an ST trademark.

5.1 ACEPACK™ 2 CIB press fit pins package information

Figure 23: ACEPACK™ 2 CIB press fit pins package outline (dimensions are in mm)

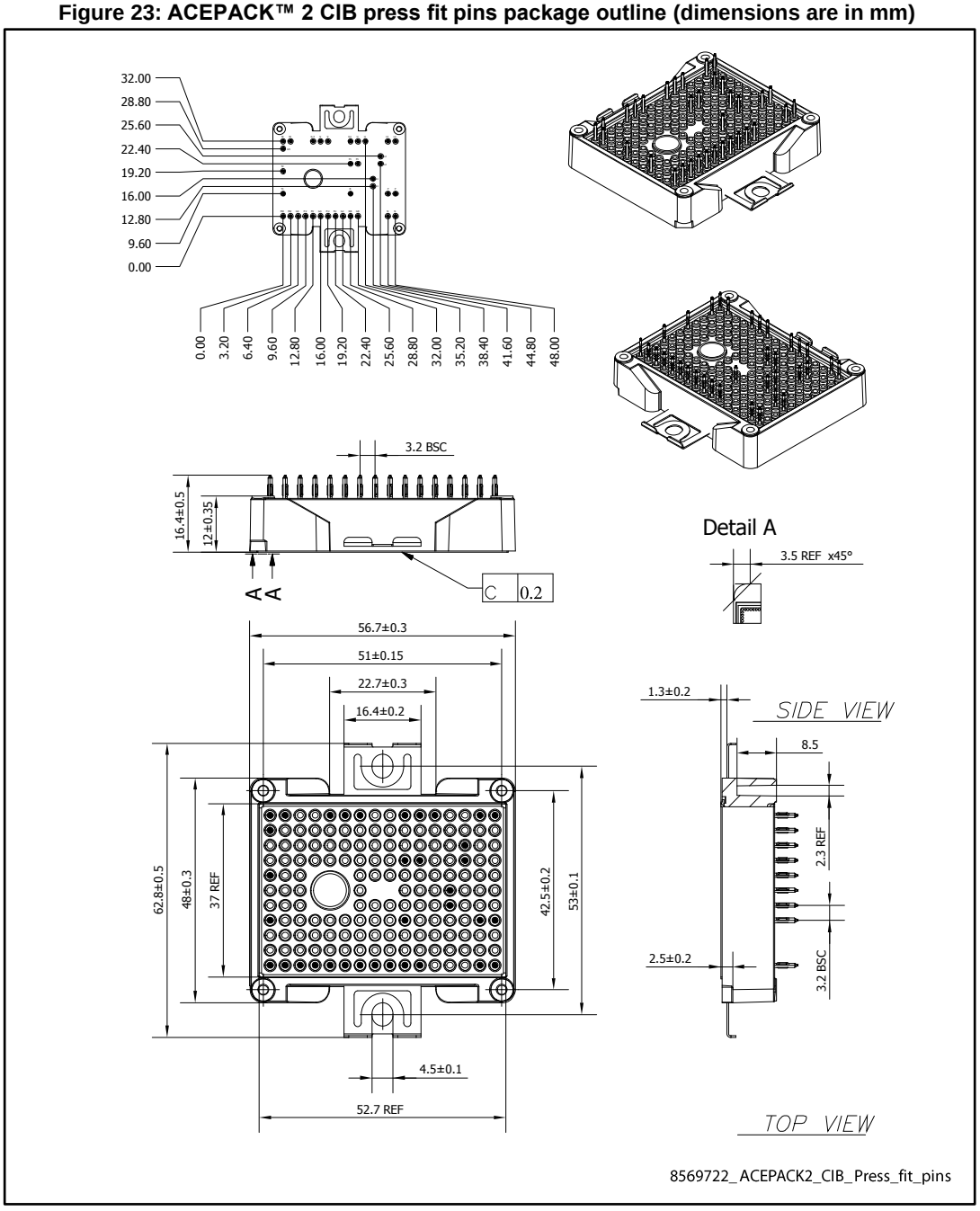

- The lead size includes the thickness of the lead plating material.
- Dimensions do not include mold protrusion.
- Package dimensions do not include any eventual metal burrs.

Figure 24: ACEPACK™ 2 CIB press fit pins recommended PCB holes layout

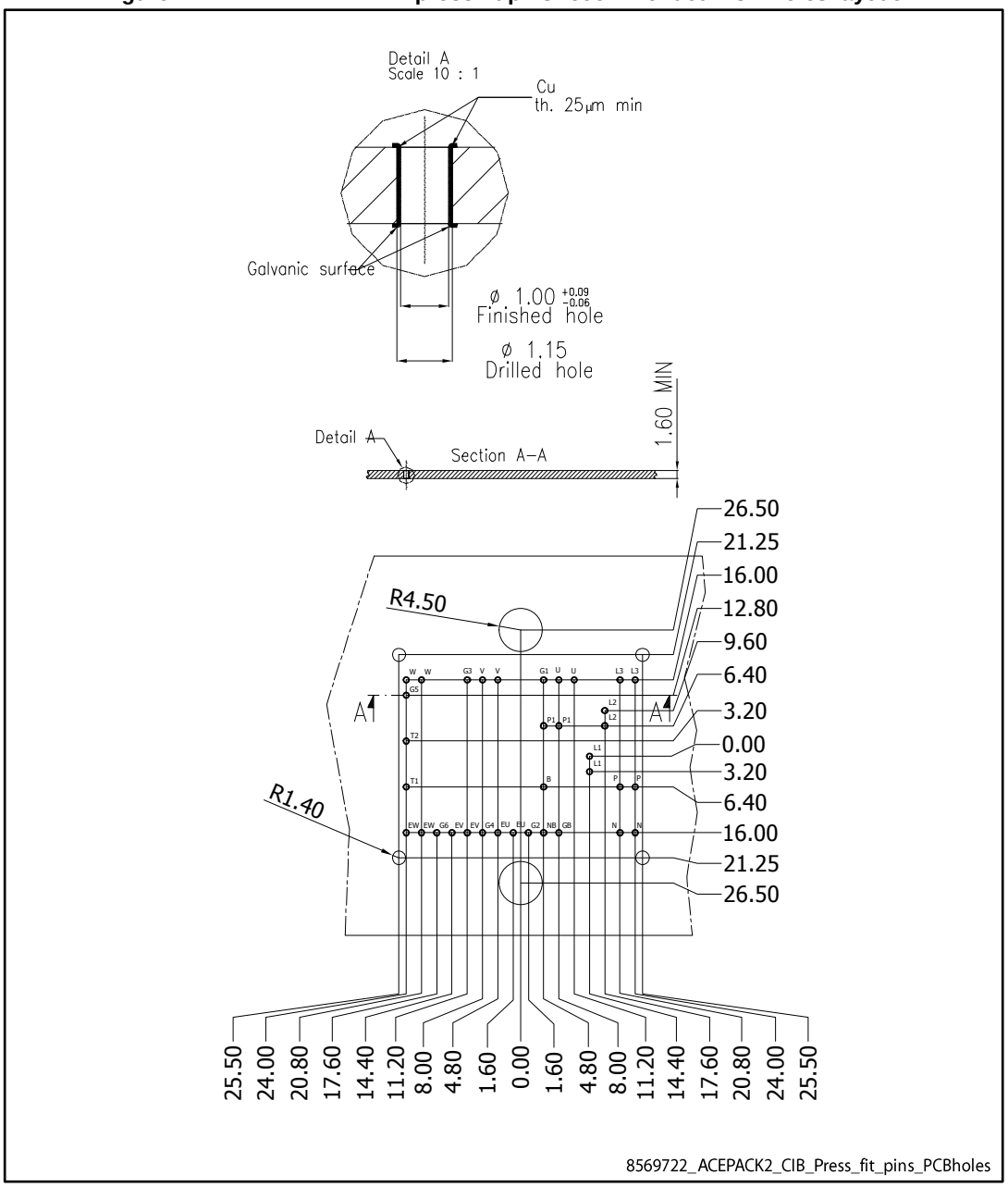

6 Revision history

Table 14: Document revision history

Date	Revision	Changes
02-Oct-2017	1	Initial release.

IMPORTANT NOTICE – PLEASE READ CAREFULLY

STMicroelectronics NV and its subsidiaries ("ST") reserve the right to make changes, corrections, enhancements, modifications, and improvements to ST products and/or to this document at any time without notice. Purchasers should obtain the latest relevant information on ST products before placing orders. ST products are sold pursuant to ST's terms and conditions of sale in place at the time of order acknowledgement.

Purchasers are solely responsible for the choice, selection, and use of ST products and ST assumes no liability for application assistance or the design of Purchasers' products.

No license, express or implied, to any intellectual property right is granted by ST herein.

Resale of ST products with provisions different from the information set forth herein shall void any warranty granted by ST for such product.

ST and the ST logo are trademarks of ST. All other product or service names are the property of their respective owners.

Information in this document supersedes and replaces information previously supplied in any prior versions of this document.

© 2017 STMicroelectronics – All rights reserved