A1P35S12M3-F

ACEPACK™ 1 - sixpack topology - 1200 V, 35 A trench gate field-stop IGBT M series, soft diode and NTC

Datasheet - production data

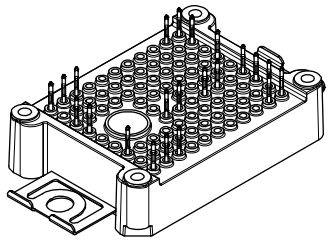

ACEPACK™ 1

Figure 1: Internal electrical schematic

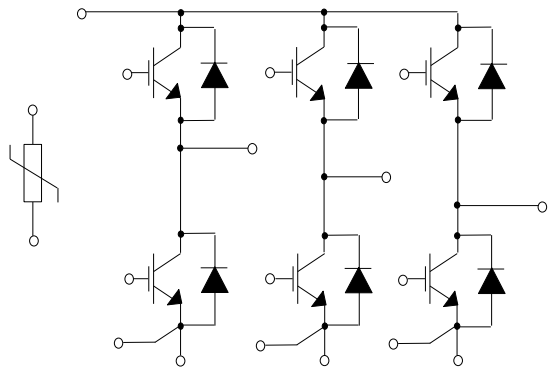

Features

- ACEPACK™ 1 power module
  - DBC Cu Al_2O_3 Cu
- Sixpack topology
  - 1200 V, 35 A IGBTs and diodes
  - $V_{CE(sat)}$: 1.95 V @ I_C = 35 A
  - Soft and fast recovery diode
- Integrated NTC

Applications

- Inverters
- Industrial
- Motor drives

Description

This power module is a sixpack topology in an ACEPACK™ 1 package with NTC, integrating the advanced trench gate field-stop technologies from STMicroelectronics. This new IGBT technology represents the best compromise between conduction and switching loss, to maximize the efficiency of any converter system up to 20 kHz.

Table 1: Device summary

Order code	Marking	V_{CES}, I_C ratings	Package	Leads type
A1P35S12M3-F	A1P35S12M3-F	1200 V, 35 A	ACEPACK™ 1	Press fit contact pins

This is information on a product in full production. www.st.com

Contents

1 Electrical ratings 3
1.1 IGBT 3
1.2 Diode 4
1.3 NTC 5
1.4 Package 6
2 Electrical characteristics curves 7
3 Test circuits 9
4 Topology and pin description 10
5 Package information 11
5.1 ACEPACK™ 1 sixpack press fit pins package information 11
6 Revision history 13

1 Electrical ratings

1.1 IGBT

Limiting values at T_j = 25 °C, unless otherwise specified.

Table 2: Absolute maximum ratings of the IGBT

Symbol	Parameter	Value	Unit
V_{CES}	Collector-emitter voltage (V_{GE} = 0)	1200	V
I_C	Continuous collector current (T_c = 100 °C)	35	A
I_{CP}(1)	Pulsed collector current	70	A
V_{GE}	Gate-emitter voltage	±20	V
P_{TOT}	Total power dissipation	250	W
T_{JMAX}	Maximum junction temperature	175	°C
T_{Jop}	Operative temperature range under switching conditions	-40 to 150	°C

Notes:

(1)Pulse width limited by maximum junction temperature.

Table 3: Electrical characteristics of the IGBT

Symbol	Parameter	Test conditions	Min.	Typ.	Max.	Unit
$V_{(BR)CES}$	Collector-emitter breakdown voltage	I_C = 1 mA, V_{GE} = 0 V	1200			V
$V_{CE(sat)}$	Collector-emitter saturation voltage	V_{GE} = 15 V, I_C= 35 A		1.95	2.45	V
		V_{GE} = 15 V, I_C = 35 A, T_J = 150 ˚C		2.3		
$V_{GE(th)}$	Gate threshold voltage	V_{CE} = V_{GE}, I_C = 1 mA	5	6	7	V
I_{CES}	Collector cut-off current	V_{GE} = 0 V, V_{CE} = 1200 V			100	µA
I_{GES}	Gate-emitter leakage current	V_{CE} = 0 V, V_{GE} = ±20 V			±500	nA
C_{ies}	Input capacitance	V_{CE} = 25 V, f = 1 MHz, V_{GE} = 0 V		2154		pF
C_{oes}	Output capacitance			164		pF
C_{res}	Reverse transfer capacitance			86		pF
Q_g	Total gate charge	V_{CC} = 960 V, I_C = 35 A, V_{GE} = ±15 V		163		nC
$t_{d(on)}$	Turn-on delay time	V_{CC} = 600 V, I_C = 35 A, R_G = 10 Ω, V_{GE} = ±15 V, di/dt = 1900 A/µs		122		ns
t_r	Current rise time			17		ns
E_{on}(1)	Turn-on switching energy			1.21		mJ
$t_{d(off)}$	Turn-off delay time	V_{CC} = 600 V, I_C = 35 A, R_G = 10 Ω, V_{GE} = ±15 V, dv/dt = 7800 V/µs;		142		ns
t_f	Current fall time			150		ns
E_{off}(2)	Turn-off switching energy			2.19		mJ

Symbol	Parameter	Test conditions	Min.	Typ.	Max.	Unit
$t_{d(on)}$	Turn-on delay time	V_{CC} = 600 V, I_C = 35 A, R_G = 10 Ω, V_{GE} = ±15 V, di/dt = 1533 A/µs, T_J = 150 °C		124		ns
t_r	Current rise time			18		ns
E_{on}	Turn-on switching energy			1.8		mJ
$t_{d(off)}$	Turn-off delay time	V_{CC} = 600 V, I_C = 35 A, R_G = 10 Ω, V_{GE} = ±15 V, dv/dt = 6700 V/µs, T_J = 150 °C		142		ns
t_f	Current fall time			256		ns
E_{off}	Turn-off switching energy			3.1		mJ
t_{SC}	Short-circuit withstand time	V_{CC} ≤ 600 V, V_{GE} ≤ 15 V, T_{Jstart} ≤ 150 °C	10			µs
R_{THj-c}	Thermal resistance junction to case	Each IGBT		0.55	0.60	°C/W
R_{THc-h}	Thermal resistance case to heatsink	Each IGBT, λ_{grease} = 1 W/(m·°C)		0.70		°C/W

Notes:

(1)Including the reverse recovery of the diode.

(2)Including the tail of the collector current.

1.2 Diode

Table 4: Absolute maximum ratings of the diode

Symbol	Parameter	Value	Unit
V_{RRM}	Repetitive peak reverse voltage	1200	V
I_F	Continuous forward current at (T_C = 100 °C)	35	A
I_{FP}(1)	Pulsed forward current	70	A
T_{JMAX}	Maximum junction temperature	175	°C
T_{Jop}	Operative temperature range under switching conditions	-40 to 150	°C

Notes:

(1)Pulse width limited by maximum junction temperature.

Table 5: Electrical characteristics of the diode

Symbol	Parameter	Test conditions	Min.	Typ.	Max.	Unit
V_F	Forward voltage	I_F = 35 A	-	2.95	4.1	V
		I_F = 35 A, T_J = 150 ˚C	-	2.3		
t_{rr}	Reverse recovery time	I_F = 35 A, V_R = 600 V, V_{GE} = ±15 V, di/dt = 1900 A/µs	-	140		ns
Q_{rr}	Reverse recovery charge		-	2.62		µC
I_{rrm}	Reverse recovery current		-	54		A
E_{rec}	Reverse recovery energy		-	1.2		mJ
t_{rr}	Reverse recovery time	I_F = 35 A, V_R = 600 V, V_{GE} = ±15 V, di/dt = 1533 A/µs, T_J = 150 °C	-	350		ns
Q_{rr}	Reverse recovery charge		-	6.6		µC
I_{rrm}	Reverse recovery current		-	63		A
E_{rec}	Reverse recovery energy		-	3.2		mJ
R_{THj-c}	Thermal resistance junction to case	Each diode	-	0.8	0.9	°C/W
R_{THc-h}	Thermal resistance case to heatsink	Each diode, λ_{grease} = 1 W/(m·°C)	-	0.75		°C/W

1.3 NTC

Table 6: NTC temperature sensor, considered as stand-alone

Symbol	Parameter	Test condition	Min.	Typ.	Max.	Unit
R_{25}	Resistance	T = 25°C		5		kΩ
R_{100}	Resistance	T = 100°C		493		Ω
ΔR/R	Deviation of R_{100}		-5		+5	%
$B_{25/50}$	B-constant			3375		K
$B_{25/80}$	B-constant			3411		K
T	Operating temperature range		-40		150	°C

Figure 2: NTC resistance vs. temperature

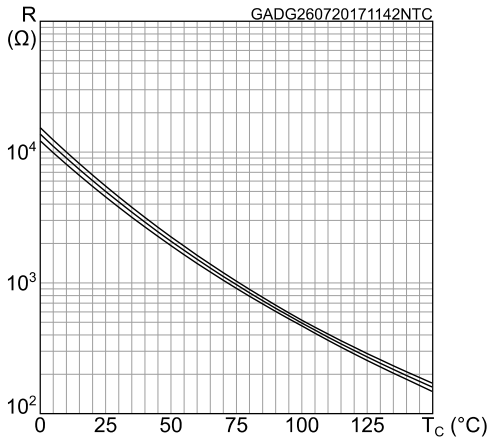

Figure 3: NTC resistance vs. temperature, zoom

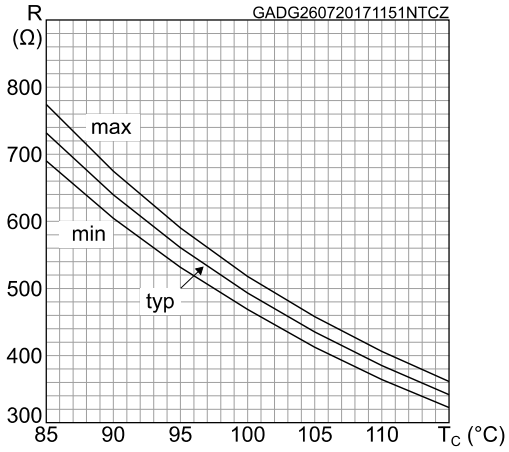

1.4 Package

Table 7: ACEPACK™ 1 package

Symbol	Parameter	Min.	Typ.	Max.	Unit
V_{isol}	Isolation voltage (AC voltage, t = 60 s)			2500	V
M_d	Screw mounting torque	40		80	Nm
T_{stg}	Storage temperature	-40		125	°C
CTI	Comparative tracking index	200			
L_s	Stray inductance module P1 - EW loop		28.7		nH
R_s	Module lead resistance, terminal to chip		3.9		mΩ

2 Electrical characteristics curves

Figure 4: IGBT output characteristics (V_{GE} = 15 V)

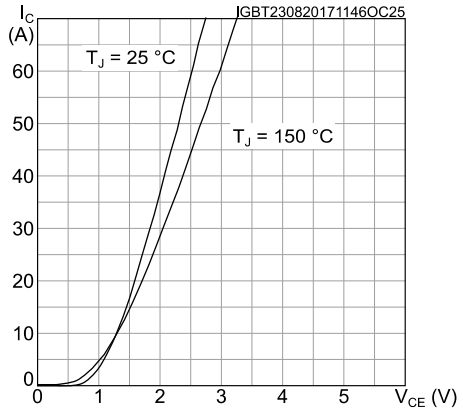

Figure 5: IGBT output characteristics (T_J = 150 °C)

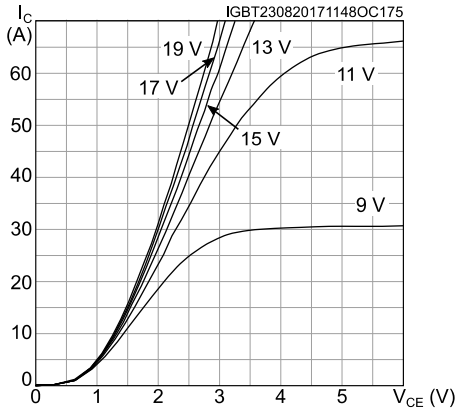

Figure 6: IGBT transfer characteristics (V_{CE} = 15 V)

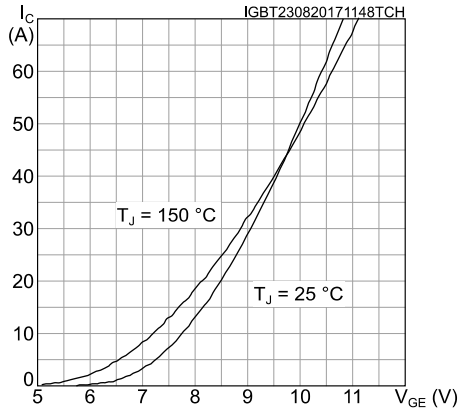

Figure 7: Switching energy vs. gate resistance

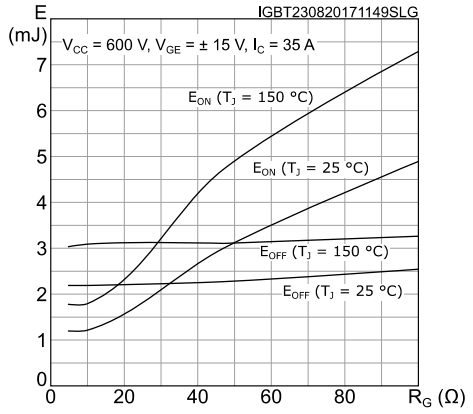

Figure 8: Switching energy vs. collector current

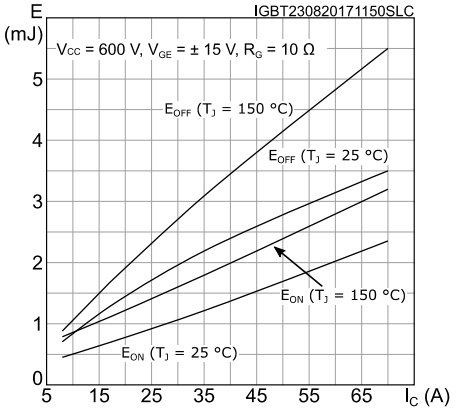

Figure 9: IGBT reverse biased safe operating area (R_{BSOA})

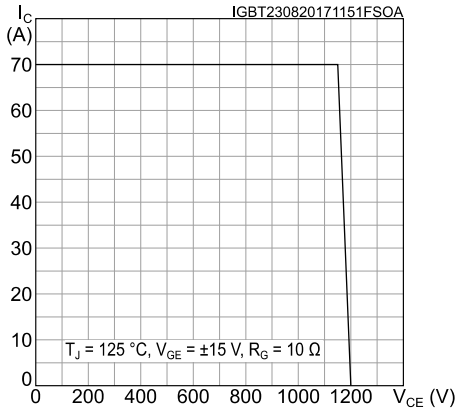

Figure 10: Diode forward characteristics

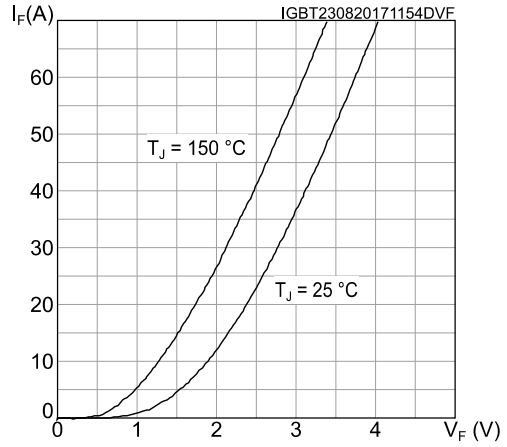

Figure 11: Diode reverse recovery energy vs. diode current slope

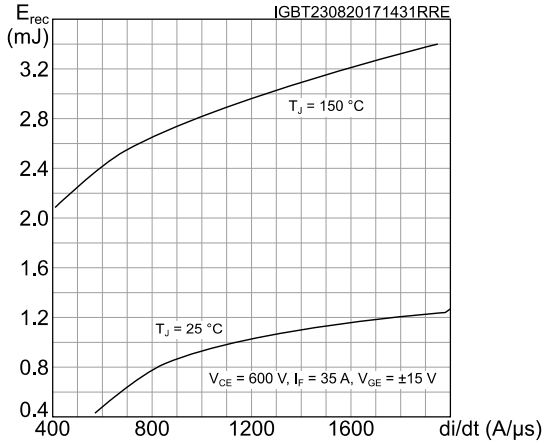

Figure 12: Diode reverse recovery energy vs. forward current

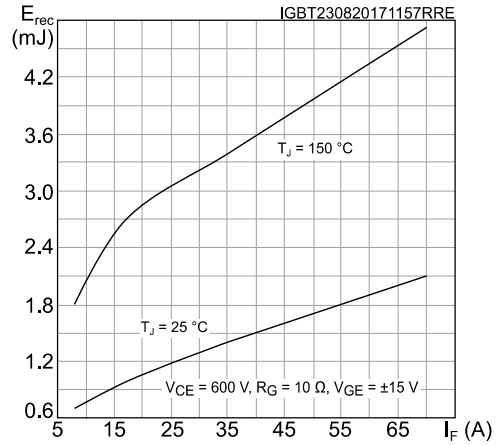

Figure 13: Diode reverse recovery energy vs. gate resistance

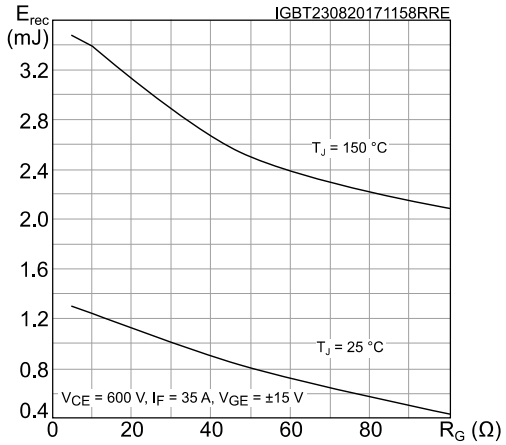

Figure 14: Inverter diode thermal impedance

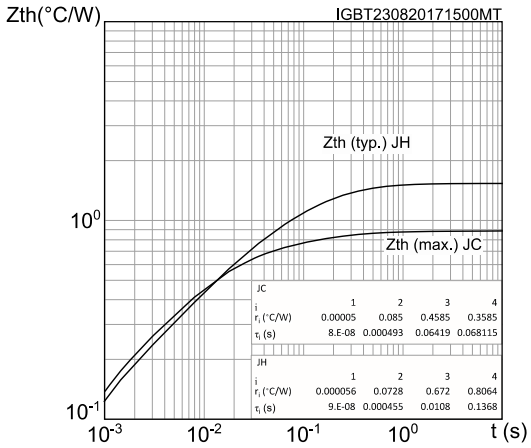

Figure 15: IGBT thermal impedance

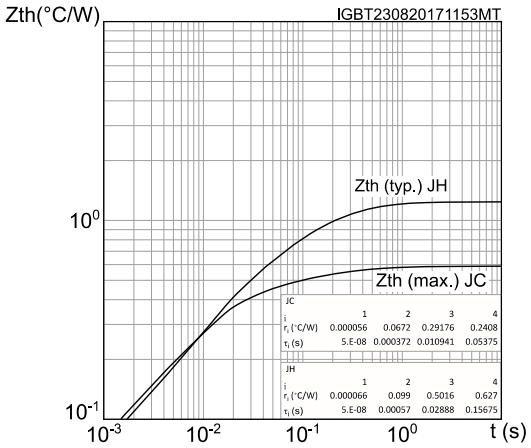

3 Test circuits

Figure 16: Test circuit for inductive load switching

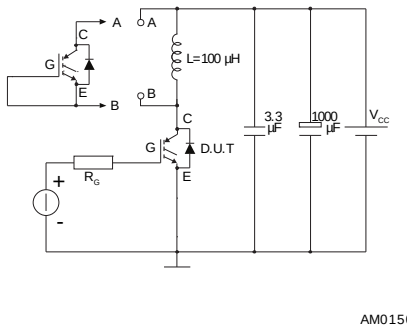

Figure 17: Gate charge test circuit

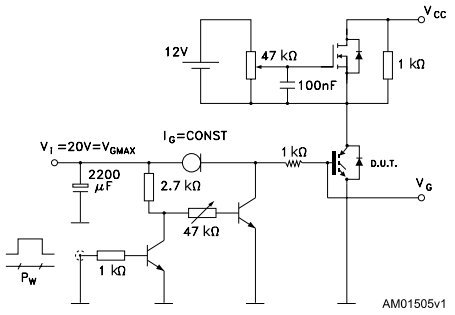

Figure 18: Switching waveform

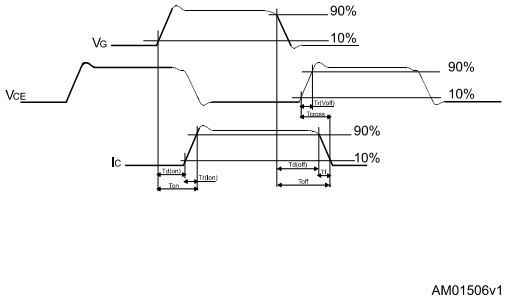

Figure 19: Diode reverse recovery waveform

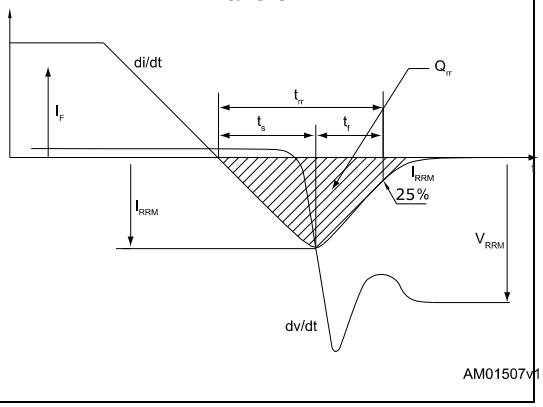

4 Topology and pin description

Figure 20: Electrical topology and pin description

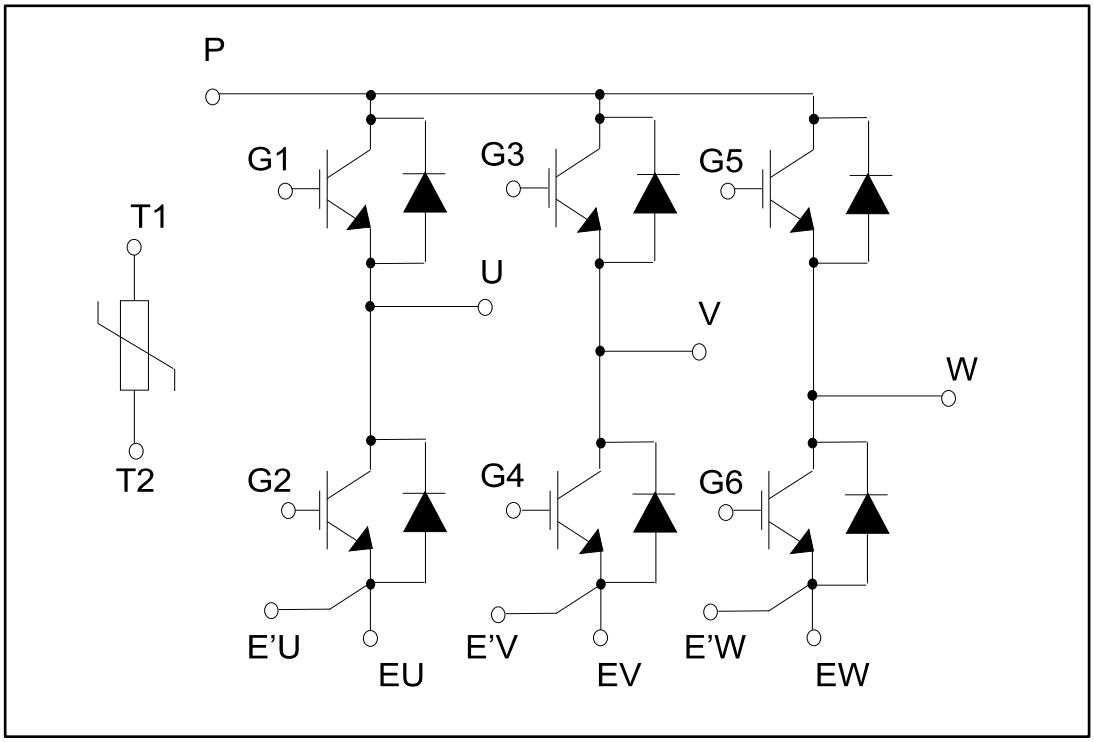

Figure 21: Package top view with sixpack pinout

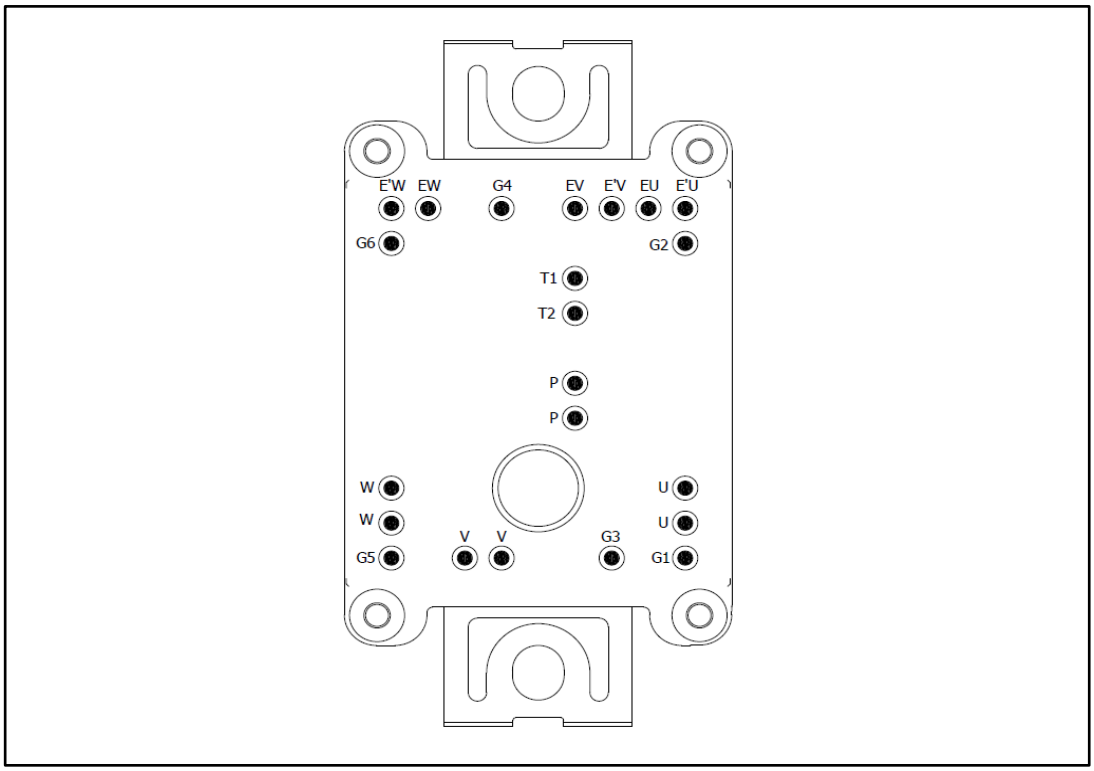

5 Package information

In order to meet environmental requirements, ST offers these devices in different grades of ECOPACK® packages, depending on their level of environmental compliance. ECOPACK® specifications, grade definitions and product status are available at: ***www.st.com***. ECOPACK® is an ST trademark.

5.1 ACEPACK™ 1 sixpack press fit pins package information

Figure 22: ACEPACK™ 1 sixpack press fit pins package outline (dimensions are in mm)

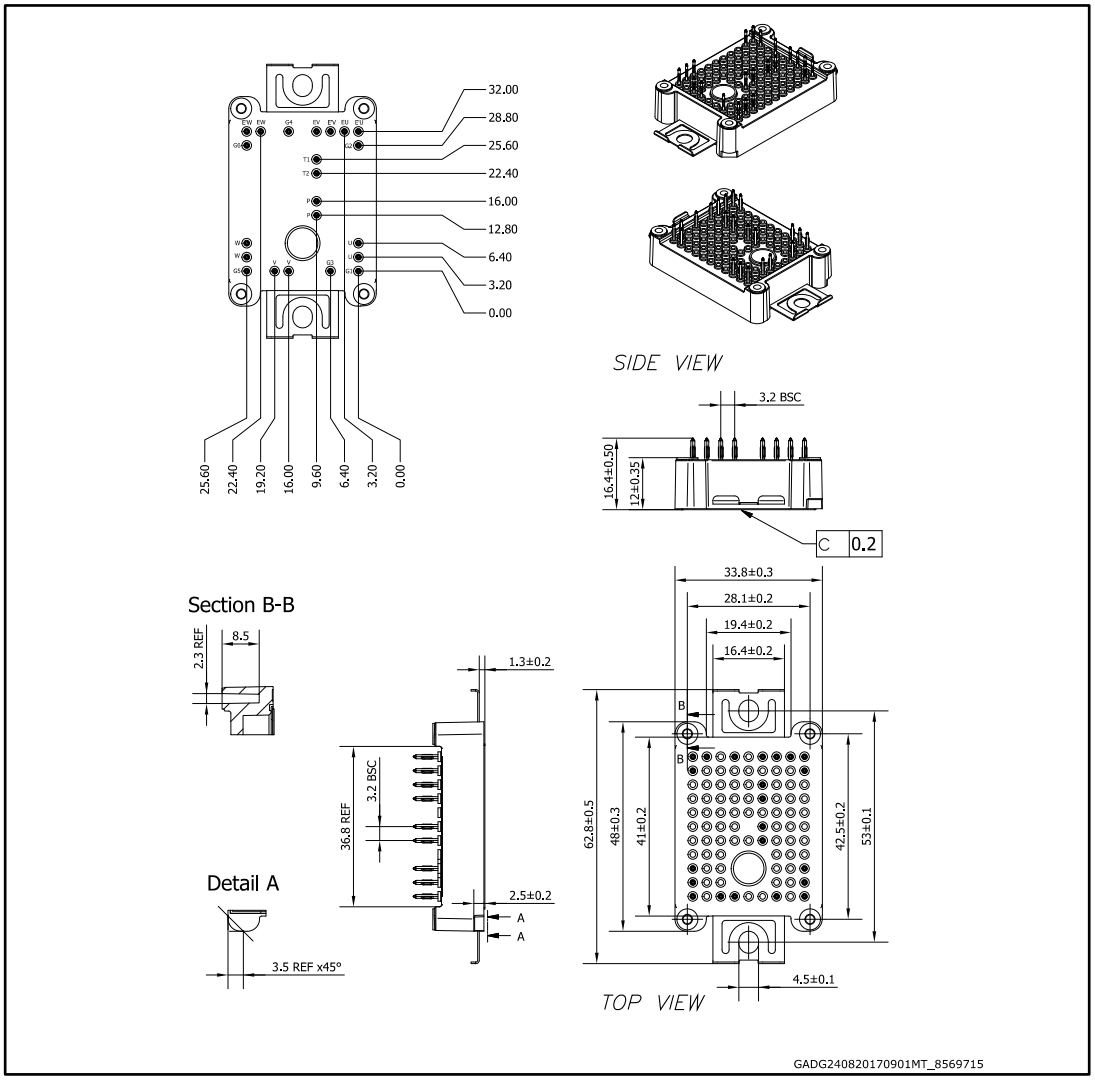

- The lead size includes the thickness of the lead plating material.
- Dimensions do not include mold protrusion.
- Package dimensions do not include any eventual metal burrs.

Figure 23: ACEPACK™ 1 sixpack press fit pins package outline (dimension are in mm)

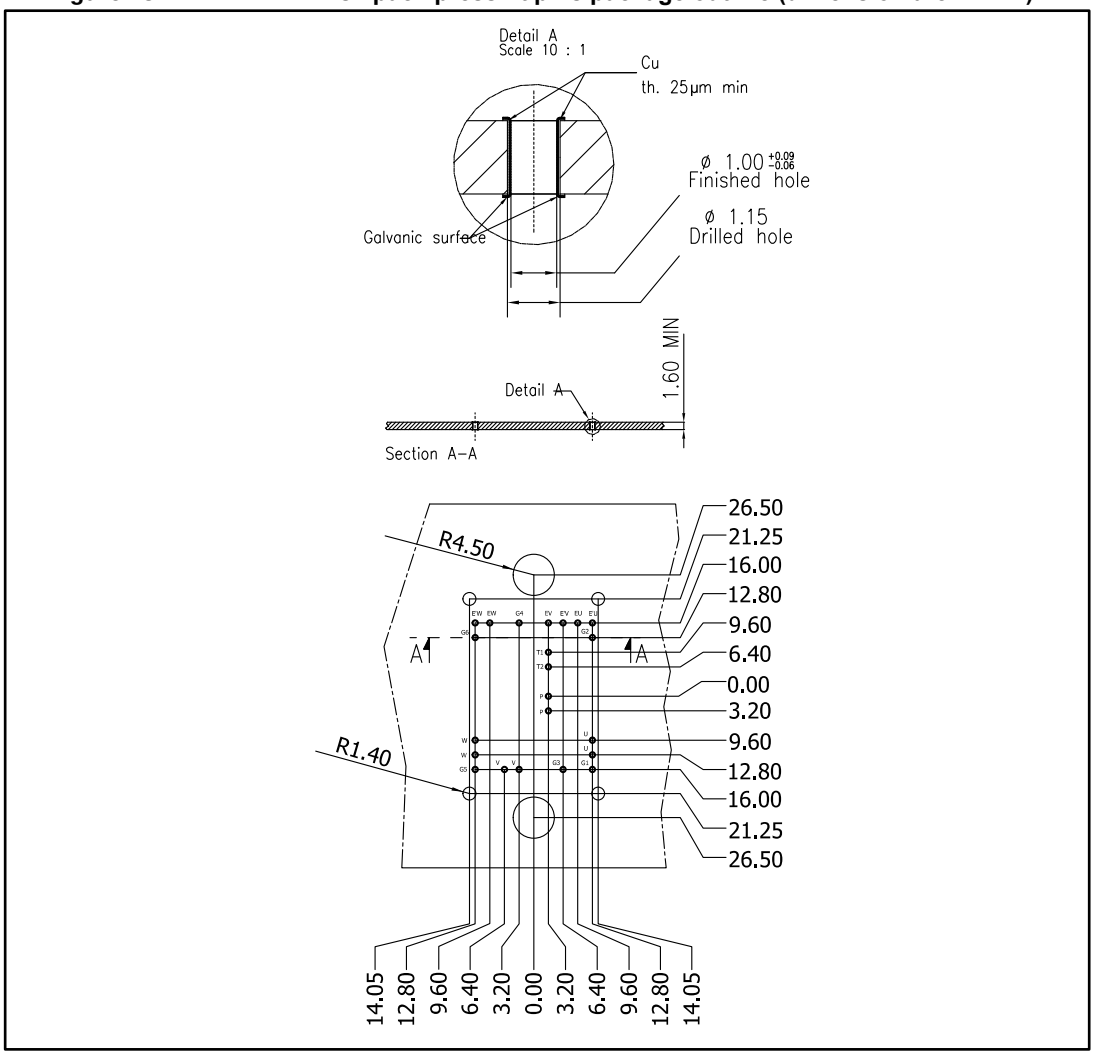

6 Revision history

Table 8: Document revision history

Date	Revision	Changes
04-May-2016	1	Initial release.
24-Aug-2017	2	Updated title, features, description and *Table 1: "Device summary"* in cover page. Updated *Section 1: "Electrical ratings"*. Added *Section 2: "Electrical characteristics curves"*, *Section 3: "Test circuits"*, *Section 4: "Topology and pin description"* and *Section 5: "Package information"*. Minor text changes.
03-Oct-2017	3	Updated *Table 7: "ACEPACK™ 1 package"* and *Section 2: "Electrical characteristics curves"*. Minor text changes.

IMPORTANT NOTICE – PLEASE READ CAREFULLY

STMicroelectronics NV and its subsidiaries ("ST") reserve the right to make changes, corrections, enhancements, modifications, and improvements to ST products and/or to this document at any time without notice. Purchasers should obtain the latest relevant information on ST products before placing orders. ST products are sold pursuant to ST's terms and conditions of sale in place at the time of order acknowledgement.

Purchasers are solely responsible for the choice, selection, and use of ST products and ST assumes no liability for application assistance or the design of Purchasers' products.

No license, express or implied, to any intellectual property right is granted by ST herein.

Resale of ST products with provisions different from the information set forth herein shall void any warranty granted by ST for such product.

ST and the ST logo are trademarks of ST. All other product or service names are the property of their respective owners.

Information in this document supersedes and replaces information previously supplied in any prior versions of this document.

© 2017 STMicroelectronics – All rights reserved