OMRON

Safety Relay Unit

G9SE Series

Compact and Simple Safety Control

» Simple wiring using Push-In Plus terminal block

» Slim design to save mounting space

» Easy maintenance with status indicators

realizing

SAFETY, TECHNOLOGY & INNOVATION

Compact and easy-to-install units with safety outputs
Helps increase your productivity, from installation to mainte

Omron's new G9SE series of safety relay units offers an easy approach for various simple safety applications. The G9SE saves mounting space, lowers installation cost with Push-In Plus terminal block, and reduces operational cost with intuitive diagnostic indicators.

Slim design to save mounting space

The slim design of only 17.5 or 22.5 mm saves space in the control panel.

[Applicable safety standards]

EN ISO 13849-1: PLe/Safety Category 4

IEC 62061: SIL3

EN81-1/-2

G9SE Series

nance

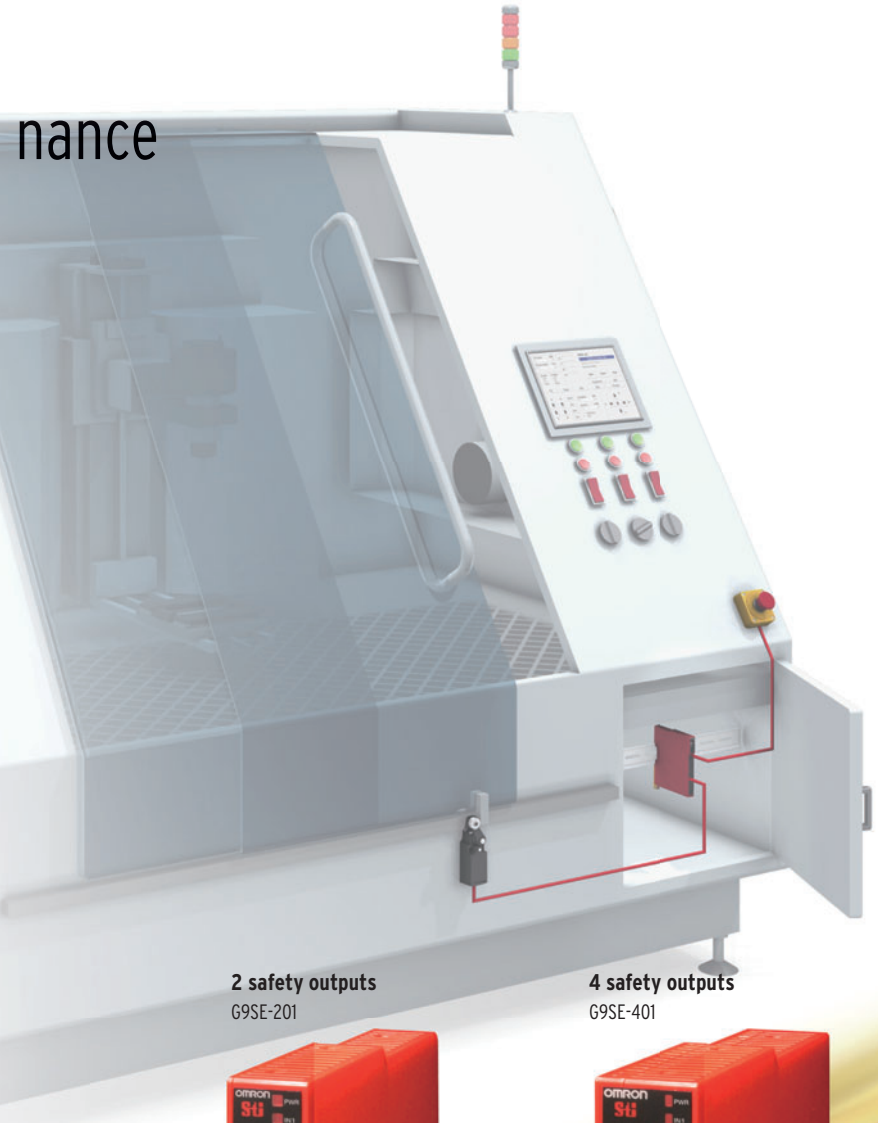

For various safety input devices

A wide variety of safety input devices such as emergency stop switches, door switches, and light curtains can be connected.
OFF-delayed safety output models are also available.

2 safety outputs
G9SE-201

E-Stop
Door switch
Opto sensor
Safety-output contact (2)

4 safety outputs
G9SE-401

E-Stop
Door switch
Opto sensor
Safety-output contact (4)

2 safety outputs with OFF-delay
G9SE-221-T05/T30

E-Stop
Door switch
Opto sensor
Safety-output contact (2)
Safety OFF-delay contact (2)

Simple wiring using Push-In Plus terminal block

Easy and reliable installation and maintenance

When the conventional model with terminals on the top and bottom of the unit is installed in a small control panel, it is difficult to secure sufficient space for wiring. The Push-In Plus terminal block on the front of the G9SE make installation easier and much quicker.

Conventional Models

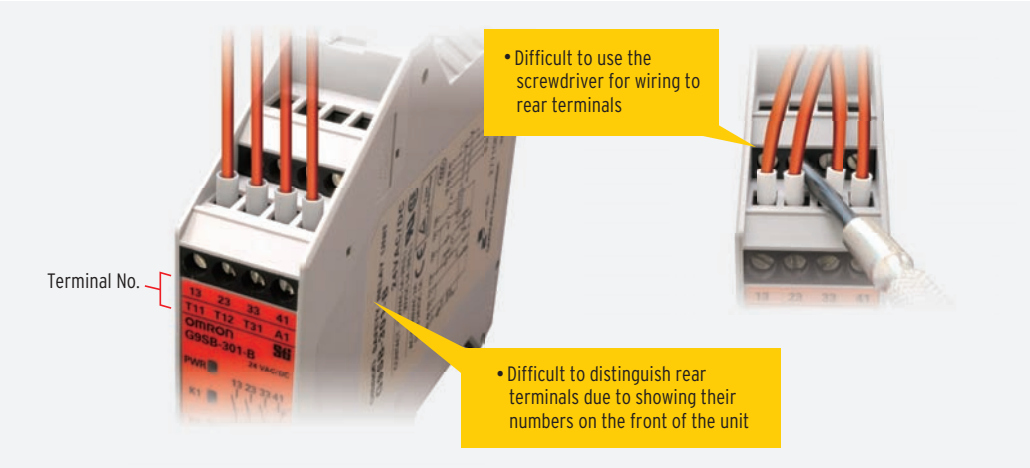

G9SE

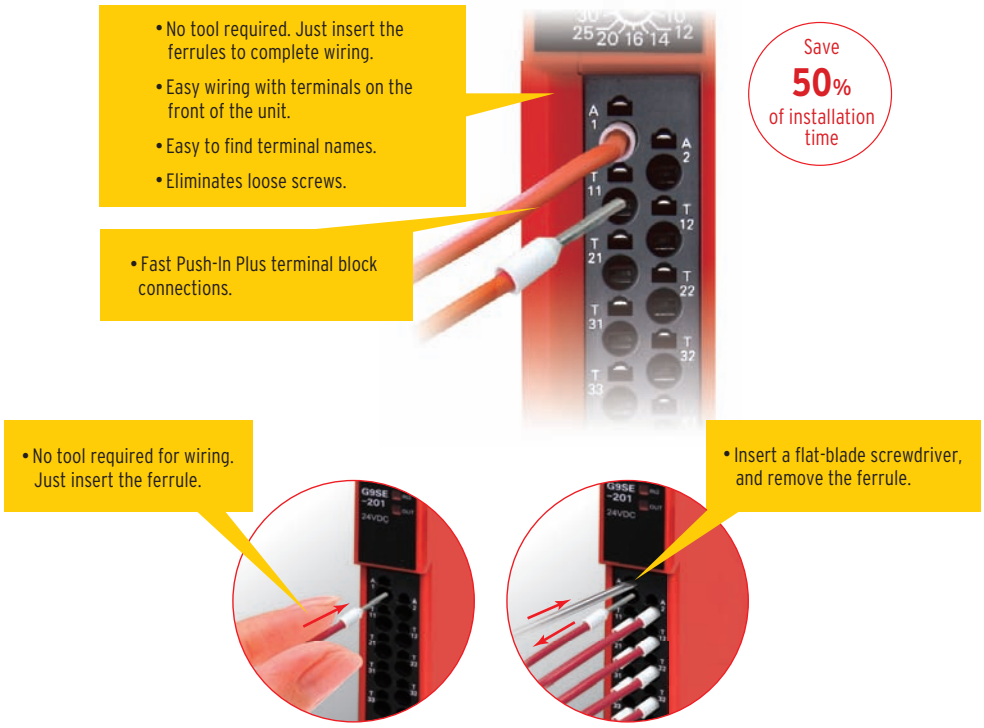

Faster troubleshooting with status indicators

The indicators of conventional safety relay units only indicate the operating status of the internal relays (K1/K2), and it is difficult to check the operation or connection of safety input devices. The new intuitive LED indicators of the G9SE show the operating status of safety inputs and outputs, enabling faster and more accurate troubleshooting when the equipment stops.

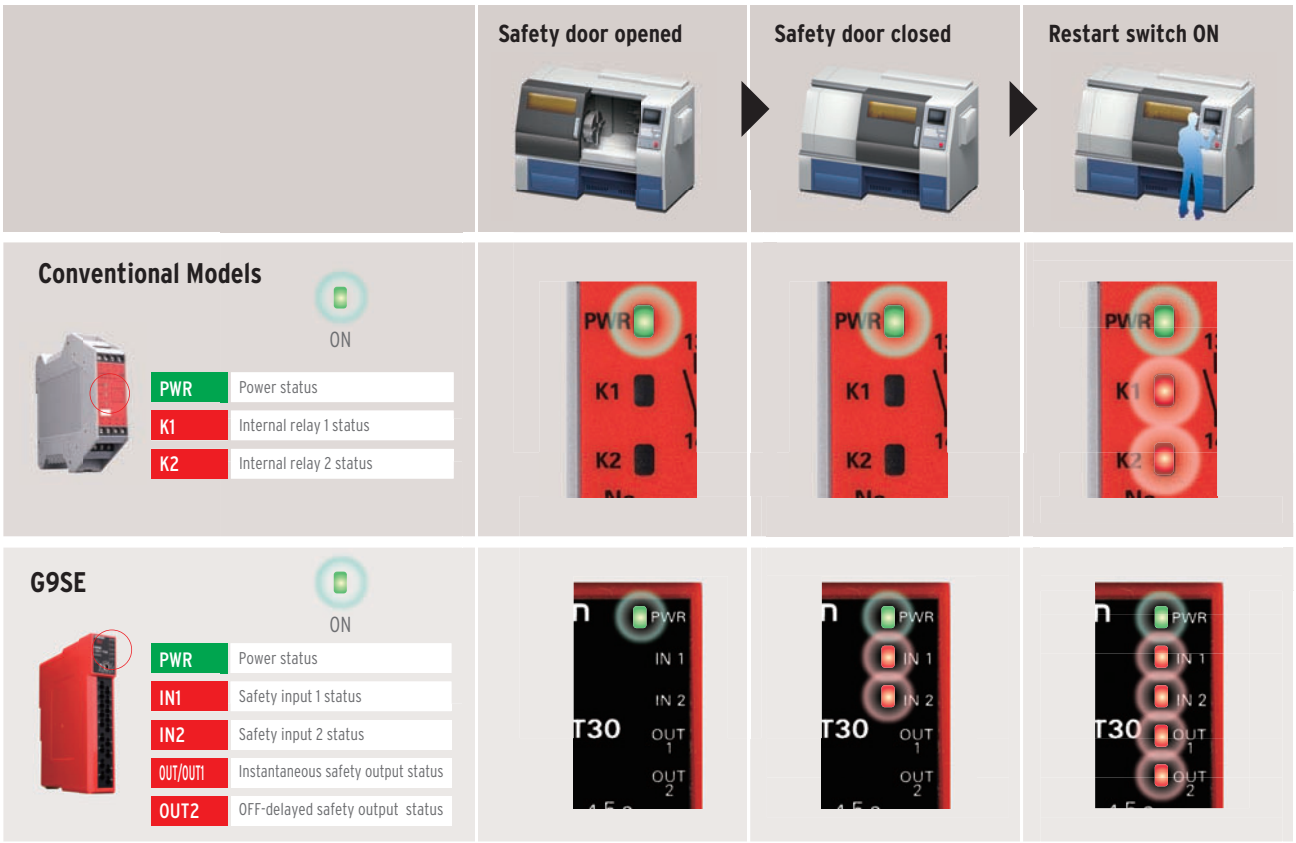

When the G9SE detects an error, such as input wiring, an indicator will blink to show where the error has occurred. This minimizes downtime to identify the cause when the equipment stops.

Blink

Input Error	Output Error	Setting Error
Short circuit between safety inputs	Fault of internal relay	OFF-delay setting error

Applications

Molding machine

Safety circuit for machine

Safety relay unit
G9SE

Door position and open/close detection

Safety limit switch
D4B-□N
Small safety limit switch
D4N/D4F

Emergency stop for machine

Emergency stop switch
A22E

Machine tool

Safety circuit for machine

Safety relay unit
G9SE

Door open/close detection

Guard lock safety-door switch
D4SL-N

Emergency stop for machine

Emergency stop switch
A22E

Shrink-wrap machine

Safety circuit for machine

Safety relay unit
G9SE

Detecting entry

Safety light curtain
F3SJ series

Emergency stop for machine

Emergency stop switch
A22E

Elevator/escalator

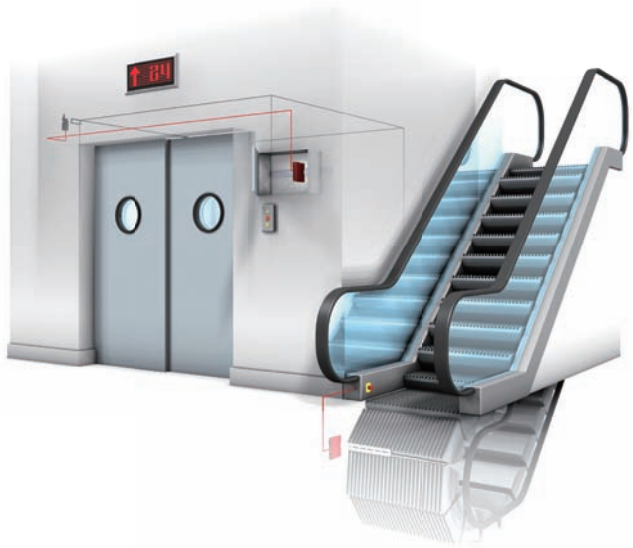

Safety circuit for machine

Safety relay unit
G9SE

Door position and open/close detection

Safety limit switch
D4B-□N
Small safety limit switch
D4N/D4F

Emergency stop for machine

Emergency stop switch
A22E

Safety Relay Unit

G9SE

Complete line-up of compact units, including OFF-delayed safety output models

- 17.5 or 22.5 mm width to save mounting space
- Simple wiring using Push-In Plus terminal block
- Easy maintenance with status indicators
- One unit for various safety devices, from contact input to PNP input

Model Number Structure

Model Number Legend

G9SE - □□□□ - □□□

(1) (2) (3) (4) (5)

(1) Function
None: Emergency stop

(2) Safety Output Configuration (Instantaneous Outputs)
2: DPST-NO
4: 4PST-NO

(3) Safety Output Configuration (OFF-delayed Output)
0: None
2: DPST-NO

(4) Auxiliary Output Configuration
1: PNP output

(5) Max. OFF-delay Time
None:
T05: 5 seconds
T30: 30 seconds

Ordering Information

Safety outputs		Auxiliary outputs *3	Max. OFF-delay time *1	Rated voltage	Model
Instantaneous	OFF-delayed *2				
DPST-NO	–	1 (Solid-state)	–	24 VDC	**G9SE-201**
4PST-NO					**G9SE-401**
DPST-NO	DPST-NO		5 s		**G9SE-221-T05**
DPST-NO	DPST-NO		30 s		**G9SE-221-T30**

*1 The OFF-delay time can be set in 16 steps as follows:
T05: 0/0.1/0.2/0.3/0.4/0.5/0.6/0.7/0.8/1/1.5/2/2.5/3/4/5 s
T30: 0/1/2/4/5/6/7/8/9/10/12/14/16/20/25/30 s
*2 The OFF-delayed output becomes an instantaneous output by setting the OFF-delay time to 0 s.
*3 PNP transistor output

Specifications

Ratings

Power Input

Item \ Model	G9SE-201	G9SE-401	G9SE-221-T□
Rated supply voltage	24 VDC		
Operating voltage range	-15% to 10% of rated supply voltage		
Rated power consumption *1	3 W max.	4 W max.	

Outputs

Item \ Model	G9SE-201	G9SE-401	G9SE-221-T□
Safety output OFF-delayed Safety output	Contact output 250 VAC 5 A 30 VDC 5 A (resistive load)		
Auxiliary output	PNP transistor output Load current: 100 mA DC max.		

Characteristics

Item \ Model			G9SE-201	G9SE-401	G9SE-221-T□
Operating time (OFF to ON state) *2			100 ms Max. *3		
Response time (ON to OFF state) *4			15 ms Max.		
Accuracy of OFF-delay time			–		Within plus or minus 10% of the set value
Inputs	Input current		5 mA Min.		
	ON voltage		11 VDC Min.		
	OFF voltage		5 VDC Max.		
	OFF current		1 mA Max.		
	Maximum cable length		100 m Max.		
	Reset input time		250 ms Min.		
Contact outputs	Contact resistance *5		100 mΩ		
	Mechanical durability		5,000,000 operations Min.		
	Electrical durability		50,000 operations Min.		
	Switching specification Inductive load (IEC/EN60947-5-1)		AC15: 240 VAC 2 A DC13: 24 VDC 1.5 A		
	Minimum applicable load		24 VDC 4 mA		
	Conditional short-circuit current (IEC/EN60947-5-1)		100A *6		
Pollution degree			2		
Over voltage category (IEC/EN60664-1)			Safety output: Class III, the others: Class II		
Insulation specification	Impulse withstand voltage (IEC/EN60947-5-1)	Between input and output	6 kV		
		Between different poles of output	6 kV (between 13-14/23-24 and 33-34/43-44 (37-38/47-48)) 4 kV (between 13-14 and 23-24, between 33-34 (37-38) and 43-44 (47-48))		
	Dielectric strength	Between input and output	2,200 VDC		
		Between different poles of output	1,500 VAC		
	Insulation resistance		100 MΩ		
Vibration resistance *7			Frequency:10 to 55 to 10 Hz Amplitude:0.35 mm half amplitude (0.7 mm double amplitude)		
Mechanical shock resistance *7	Destruction		300 m/s²		
	Malfunction		100 m/s²		
Surrounding Air Temperature			-10 to 55°C (No freezing or condensation)		
Ambient humidity			25% to 85%RH		
Degree of protection			IP20		
Weight			approx. 150 g	approx. 180 g	

*1 Power consumption of loads not included.
*2 The operating time is the time it takes for the safety contact to close after the safety inputs and feedback-reset input are turned ON. Not includes bounce time.
*3 This is in normal operation. When executing non-regular self-diagnosis for Safety output circuit, G9SE operating time become 500 ms max..
*4 The response time is the time it takes for the safety main contact to open after the safety input is turned OFF. Includes bouncetime.
*5 This is initial value using the voltage-drop method with 1A at 5VDC.
*6 Use for each contact output an 8A fuse that conforms to IEC 60127 as a short-circuit protection device. This fuse is not included with the G9SE.
*7 Condition: G9SE is mounted to mounting surface with screw and the screw mounting attachment. In the case of DIN rail mounting, mount DIN rail with G9SE to the place without big vibration. (Amplitude guideline: Less than 0.15 mm half amplitude (0.3 mm double amplitude))

Connection

Internal Connection

G9SE-201

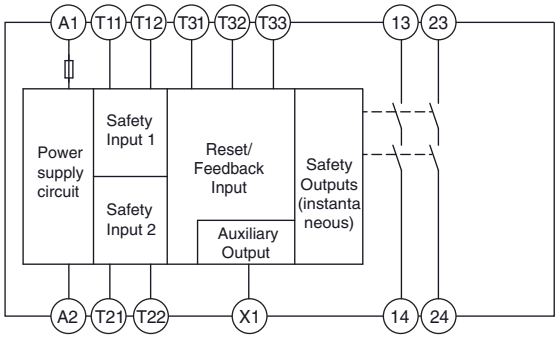

G9SE-401

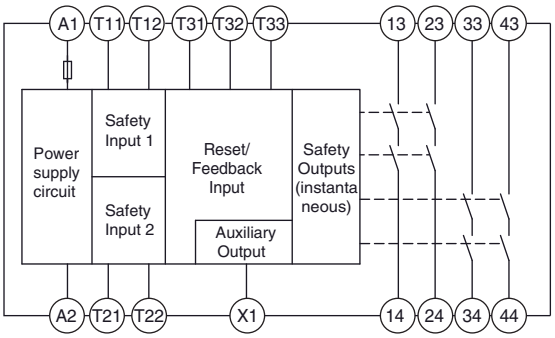

G9SE-221-T□

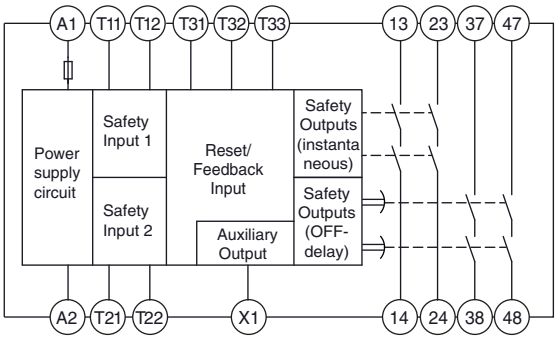

Wiring of inputs and outputs

Signal Name	Terminal Name	Description of operation	Wiring	
Power supply input	A1, A2	The input terminals for power supply. Connect the power source to the A1 and A2 terminals.	Connect the power supply plus to the A1 terminal. Connect the power supply minus to the A2 terminal.	
Safety input 1	T11, T12	To set Safety outputs in ON state, HIGH state signals must be input to both of Safety input 1 and Safety input 2. Otherwise Safety outputs cannot be in ON state.	1-channel Safety input	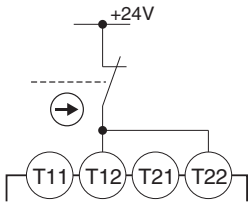
			2-channel Safety input	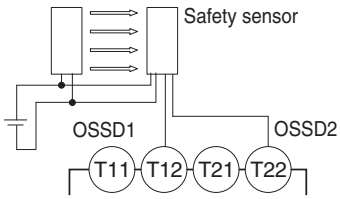
Safety input 2	T21, T22			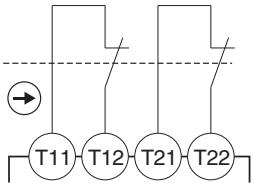
Reset/ Feedback input	T31, T32, T33	To set Safety outputs in ON state, ON state signal must be input to T33. Otherwise Safety outputs cannot be in ON state. *1	Auto reset	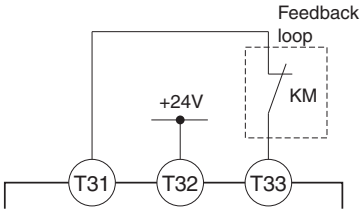
		To set Safety outputs in ON state, the signal input to T32 must change from OFF state to ON state, and then to OFF state. Otherwise Safety outputs cannot be in ON state.	Manual reset	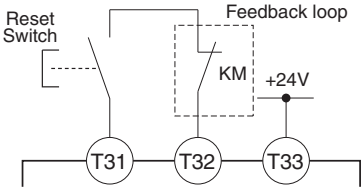
Safety output	13-14, 23-24, 33-34, 43-44	Turns ON/OFF according to the state of safety inputs, Feedback/Reset inputs. During off-delayed state, safety outputs are not able to turn ON.	Keep these outputs Open when NOT used.	
Off-delayed Safety output	37-38, 47-48	Off-delayed safety outputs. *2 Off-delay time is set by off-delay preset switch. When the delay time is set to zero, these outputs can be used as non-delay outputs.		
Auxiliary output	X1	Outputs a signal of the same logic as Safety outputs		

*1 Construct the safety system taking into account that in the Auto reset mode Safety outputs turn ON automatically when Safety inputs 1 and 2 turn ON.

*2 When the inputs of G9SE-221-T□ are restored during off-delay time, G9SE-221-T□ will operate as below. Depending on the reset mode.
- Auto reset mode: Outputs turn off after off-delay time, then immediately turns on.
- Manual reset mode: Outputs turn off after off-delay time, then turn on when reset input is given.

Appearance and Explanation of Each Parts

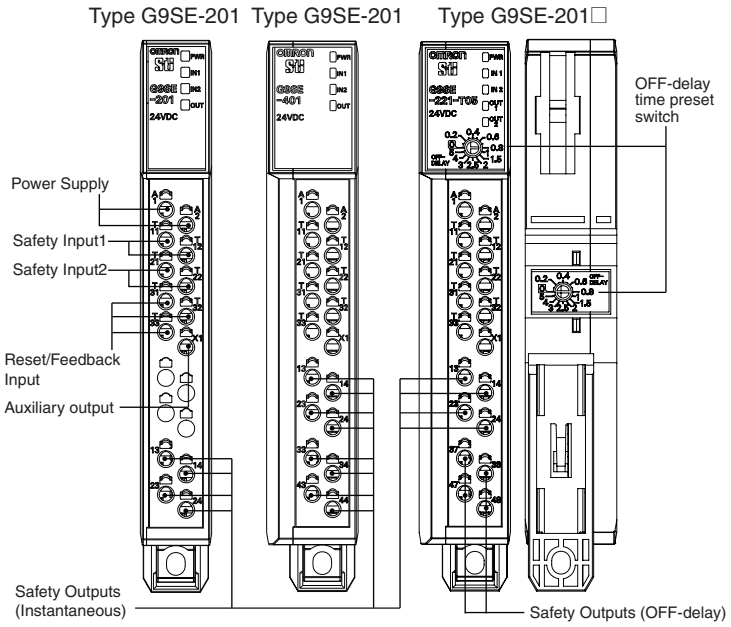

Dimensions and Terminal arrangement

(Unit: mm)

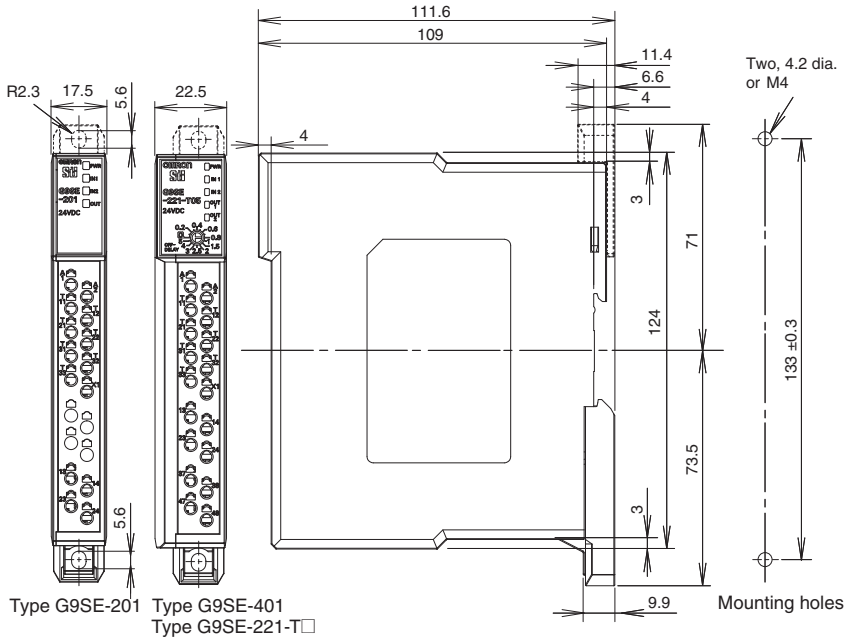

Terminal arrangement and LED indicators

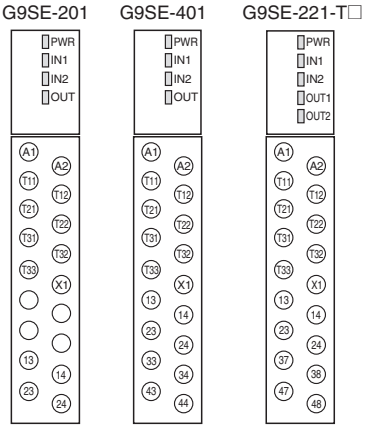

Application Examples

Application Overview

- Immediately removes power to Motor M when Emergency Stop Switch S1 is pressed.
- The power to Motor M is kept removed until Emergency Stop Switch S1 is released and Reset Switch S2 is pressed.

Evaluation example

PL/safety category	Model	Stop category	Reset
PLe/4 equivalent	Emergency stop pushbutton :A22E-M-02 (2NC contact) Push Button Switch (from Annex C of ISO 13849-1) Safety Relay Unit :G9SE-201 Contactor of rated load (from Annex C of ISO 13849-1)	0	Manual

Note: The above PL is only the evaluation result of the example. The PL must be evaluated in an actual application by the customer after confirming the usage conditions.

Wiring Example

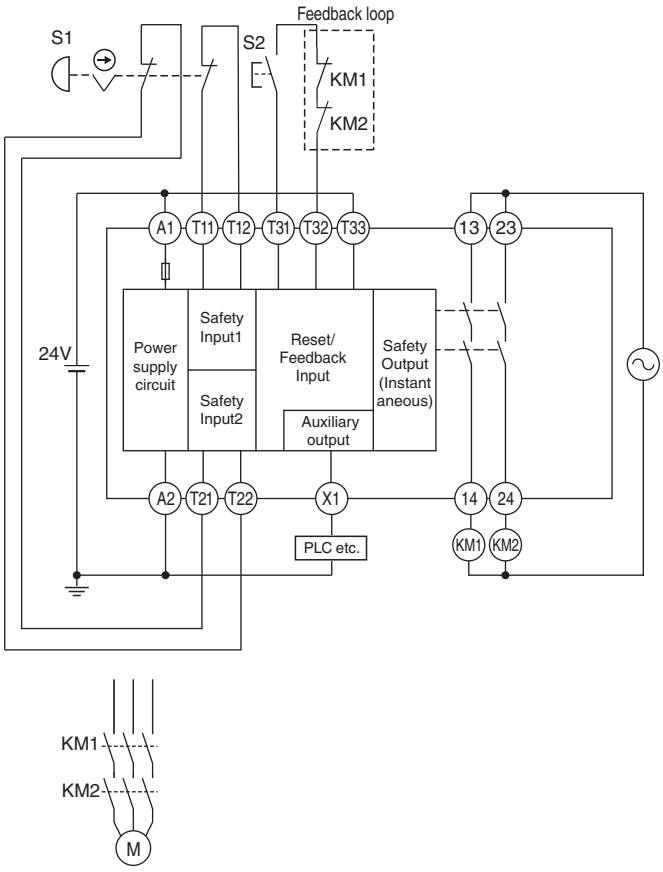

Timing Chart

Device

S1: Emergency stop switch
S2: Reset switch
KM1, KM2: Contactor
M: 3-phase motor

Application Overview

- The machine has the opening of the hazardous source which is small enough to prevent a person from entering.
- The Safety Light Curtain is installed at the safe distance from the hazardous source.
- Immediately removes power to Motor M when the Safety Light Curtain detects a finger entering the area.

Evaluation example

PL/safety category	Model	Stop category	Reset
PLe/4 equivalent	Safety Light Curtain :F3SJ-B□□□□P□□ Safety Relay Unit :G9SE-401 Contactor of rated load (from Annex C of ISO 13849-1)	0	Auto

Note: The above PL is only the evaluation result of the example. The PL must be evaluated in an actual application by the customer after confirming the usage conditions.

Wiring Example

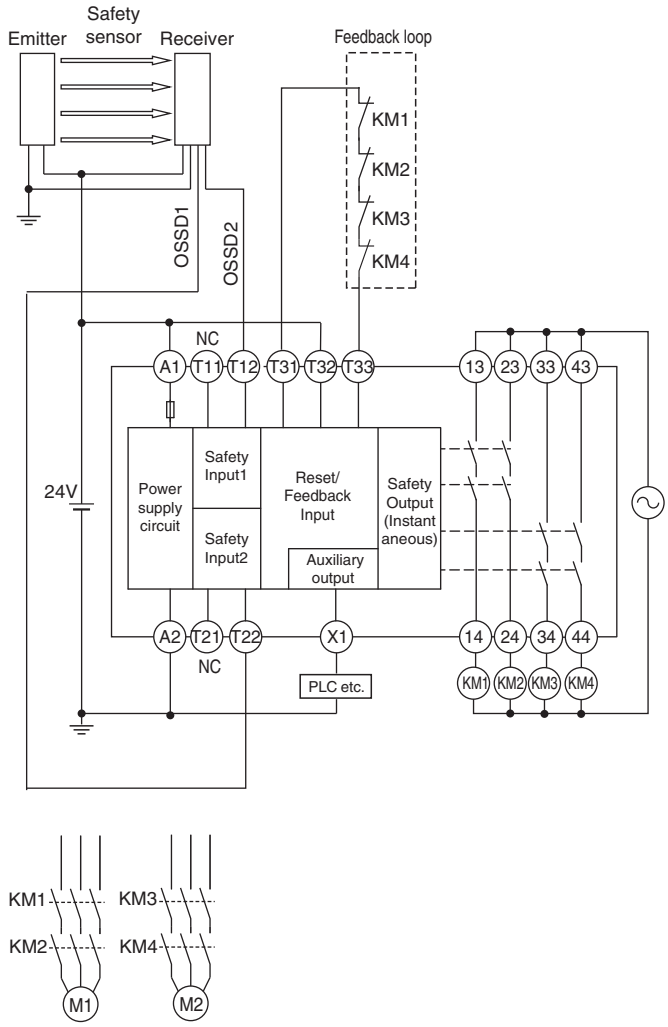

Timing Chart

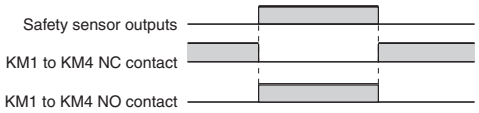

Device

Safety sensor
KM1 to KM4: Contactor
M1, M2: 3-phase motor

Note: 1. For further information of settings and wiring, refer to the catalog or instruction manual of the connected sensor.
2. Use safety sensors with PNP outputs.

Application Overview

- After OFF-delay time removes power to Motor M when Limit Switch S1 and Guard Lock Safety Door Switch S2 detect the opening of the Guard.
- When the NC contacts on both KM1 and KM2 are closed and the lock release signal is input, the Guard can be opened while Lock Release Switch S4 is pressed.
- The power to Motor M is kept removed until the Guard is closed and locked and Reset Switch S3 is pressed.

Evaluation example

PL/safety category	Model	Stop category	Reset
PLe/4 equivalent	Safety Limit Switch :D4N-□□20 Guard Lock Safety Door Switch:D4SL-N□□□A-□(Mechanical lock) Push Button Switch(from Annex C of ISO 13849-1) Safety Relay Unit :G9SE-221-T05 Contactor of rated load (from Annex C of ISO 13849-1)	1	Manual

Note: The above PL is only the evaluation result of the example. The PL must be evaluated in an actual application by the customer after confirming the usage conditions.

Wiring Example

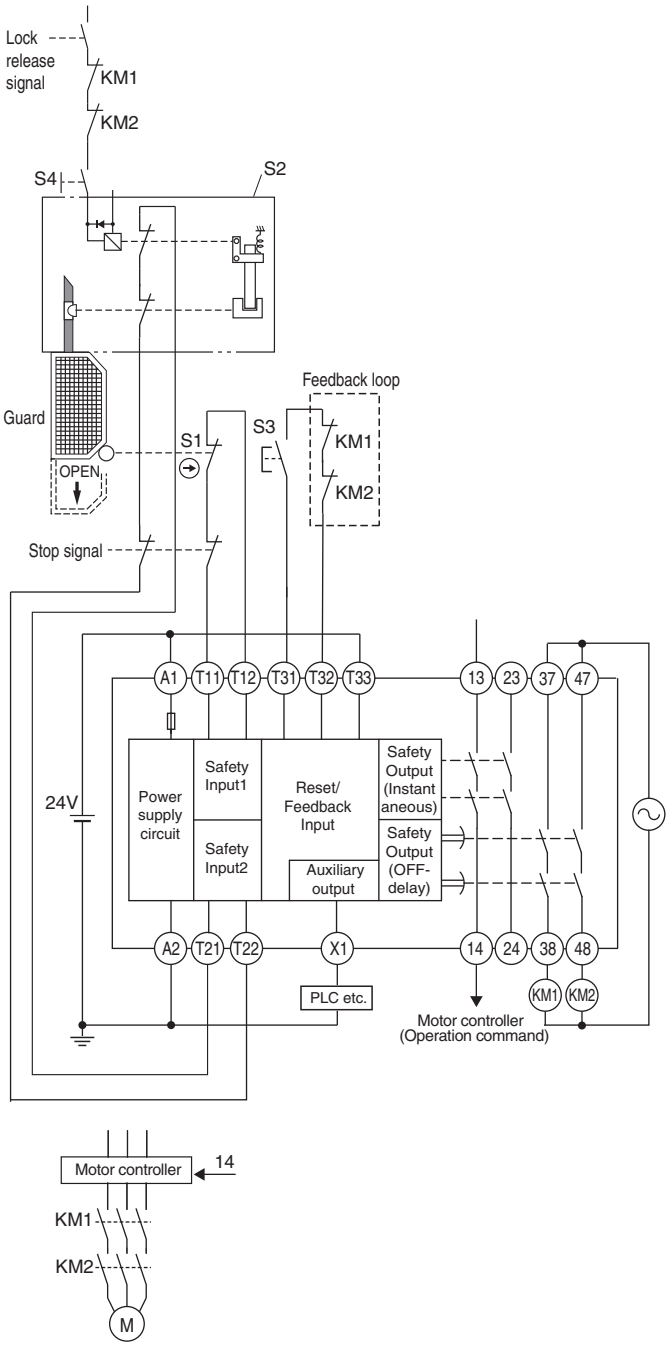

Timing Chart

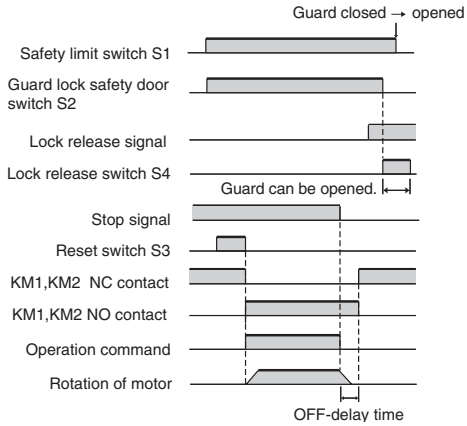

Device

S1: Safety limit switch
S2: Guard lock safety door switch(Mechanical Lock)
S3: Reset switch
KM1, KM2: Contactor
M: 3-phase motor

Safety Precautions

Be sure to read the precautions for All Safety Relay in the website at:http://www.ia.omron.com/.

Indication and Meaning for Safe Use

WARNING	Indicates a potentially hazardous situation which, if not avoided, will result in minor or moderate injury, or may result in serious injury or death. Additionally there may be significant property damage.
	Indicates prohibited actions
	Indicates mandatory actions

Alert Statements

WARNING	
Serious injury may possibly occur due to breakdown of safety outputs. Do not connect loads beyond the rated value to the safety outputs.	
Serious injury may possibly occur due to loss of required safety functions. Wire G9SE properly so that supply voltages or voltages for loads do NOT touch the safety inputs accidentally or unintentionally.	
Serious injury may possibly occur due to loss of safety functions. Use appropriate devices referring to the information shown below.	

Controlling Devices	Requirements
Emergency stop switch	Use approved devices with Direct Opening Mechanism complying with IEC/EN 60947-5-1
Door interlocking switch Limit switch	Use approved devices with Direct Opening Mechanism complying with IEC/EN 60947-5-1 and capable of switching micro loads of 24VDC, 5mA.
Safety Sensor	Use approved devices complying with the relevant product standards, regulations and rules in the country where it is used.
Relay with forcibly guided contacts	Use approved devices with forcibly guided contacts complying with EN 50205. For feedback purpose use devices with contacts capable of switching micro loads of 24VDC, 5mA.
Contactor	Use approved devices complying with IEC/EN 60947-4-1 for auxiliary contact linked with power contact (mirror contact). For feedback purpose use devices with contacts capable of switching micro loads of 24VDC, 5mA.
Other devices	Evaluate whether devices used are appropriate to satisfy the requirements of safety category level.

Precautions for Safe Use

(1) Use G9SE within an enclosure with IP54 protection or higher of IEC/EN60529.
(2) When ready for wiring, the power source shall be disconnected the terminals in order to prevent an electrical shock.
(3) Do not apply any excessive voltage or current to the input or output circuit the G9SE. Doing so may result in damage to the G9SE or cause a fire.
(4) Incorrect wiring may lead to loss of safety function. Wire conductors correctly and verify the operation of G9SE before commissioning the system in which G9SE is incorporated.
(5) Do not apply DC voltages exceeding the rated voltages, or AC voltages to G9SE.
(6) Use SELV/PELV DC supply satisfying requirements below to prevent electric shock.
- DC power supply with double or reinforced insulation, for example, according to IEC/EN60950 or EN50178 or a transformer according to IEC/EN61558.
- DC supply satisfies the requirement for class 2 circuits stated in UL 508.
(7) The lifetime of G9SE depends on the conditions of switching of its outputs. Be sure to conduct its test operation under actual operating conditions in advance and use it within appropriate switching cycles. Apply protection circuitry against back electromotive force in case connecting inductive loads to safety outputs.
(8) Do not operate the G9SE with flammable or explosive gas. An arc with operation and the heat of relay will cause a fire or an explosion.
(9) Do not drop G9SE to the ground or dismantle, repair, modify G9SE, otherwise an electric shock may occur or the G9SE may malfunction. It may lead to loss of its safety functions.
(10) Use protective device (Fuse etc.) for short-circuit protection and ground fault protection, otherwise a fire may occur or the G9SE may malfunction.
(11) Auxiliary monitoring outputs are NOT safety outputs. Do not use auxiliary outputs as any safety output.
Such incorrect use causes loss of safety function of G9SE and its relevant system.
(12) After installation of G9SE, qualified personnel shall confirm operations and maintenance.
The qualified personnel shall be qualified and authorized to secure the safety on each phases of design, installation, running, maintenance and disposal of system.
(13) A person in charge, who is familiar to the machine in which G9SE is to be installed, shall conduct and verify the installation.
(14) Perform daily and 6-month inspections for the G9SE. Otherwise, the system may fail to work properly,resulting in serious injury. Turn OFF the signal to Safety input and make sure G9SE operates without fault by checking the state of the LED indicator in inspection.
(15) Conformity to requirements of performance level is determined as an entire system. It is recommended to consult a certification body regarding assessment of conformity to the required safety level.
(16) OMRON shall not be responsible for conformity with any safety standards regarding to customer's entire system.
(17) Dispose of the Units according to local ordinances as they apply.

Precautions for Correct Use

(1) Handle with care
Do not drop G9SE to the ground or expose to excessive vibration or mechanical shocks. G9SE may be damaged and may not function properly.

(2) Adhesion of solvent such as alcohol, thinner, trichloroethane or gasoline on the product should be avoided. Such solvents make the marking on G9SE illegible and cause deterioration of parts.

(3) Conditions of storage
Do not store in such conditions stated below.
1. In direct sunlight
2. At ambient temperatures out of the following ranges:
   - Installation: At ambient temperatures out of the range -10 to 55°C
   - Storage : At ambient temperatures out of the range -25 to 55°C
3. At relative humidity out of the range of 25% to 85% or under such temperature change that causes condensation.
4. At atmospheric pressure out of the range 86 to 106 kPa.
5. In corrosive or combustible gases
6. With vibration or mechanical shocks out of the rated values.
7. Under splashing of water, oil, chemicals
8. In the atmosphere containing dust, saline or metal powder and other conductive dusts.
   G9SE may be damaged and may not function properly.

(4) At least 50 mm above top face of G9SE and below bottom face of G9SE should be available to apply rated current to outputs of G9SE and for enough ventilation.

(5) Mounting multiple units
When mounting multiple units close to each other, the rated current will be 3 A. Do not apply a current higher than 3 A. If the output current is 3 A or more, make sure that there is a minimum distance of 10mm each between all adjacent G9SE units.

(6) DIN rail mounting
Mount G9SE to DIN rails with attachments (TYPE PFP-M, not incorporated to this product), not to drop out of rails by vibration etc. especially when the length of DIN railing is short compared to the widths of G9SE.

(7) Wire correctly according to Wiring.

(8) Use cables with length less than 100 m to connect to Safety Inputs, Feed-back/Reset inputs, respectively.

(9) G9SE may malfunction due to electro-magnetic disturbances. Be sure to connect the negative terminal of DC power supply to ground. When using a DC power supply with light curtains, use DC power supply which has no interruption by a power failure of 20 ms.

(10) This is a class A product. In residential areas it may cause radio interference, in which case the user may be required to take adequate measures to reduce interference.

(11) Do NOT mix AC load and DC load to be switched in the following terminals.
- G9SE-201 : between 13-14 terminal and 23-24 terminal
- G9SE-401 : between 13-14 terminal and 23-24 terminal, 33-34 terminal and 43-44 terminal
- G9SE-221-T□ : between 13-14 terminal and 23-24 terminal, 37-38 terminal and 47-48 terminal

(12) Start entire system after more than 2s have passed since applying supply voltage to G9SE.

(13) Set the time duration of OFF-delay (Type G9SE-221-T□)
1. Set the time duration of OFF-delay to an appropriate value that does not cause the loss of safety function of system.
2. Set both of the two O on the front and back, to the same value. When setting the de After setting, make sure G9SE operating time is correct.

(14) To determine safety distance to hazards, take into account the delay of Safety outputs caused by the following time:
1. Response time
2. Preset off-delay time and accuracy of off-delay time

(15) Before G9SE outputs become in ON-state, non-regular self-diagnosis for Safety output circuit may be executed.
On this occasion, the operating noise of internal relays occurs.

(16) In the place subjected to strong vibration or shock, mount G9SE to a mounting surface with screws and the screw mounting attachment.
Otherwise, G9SE may not function properly due to vibration or mechanical shocks out of the rated values caused by sympathetic vibration of G9SE and the mounting parts, and so on.

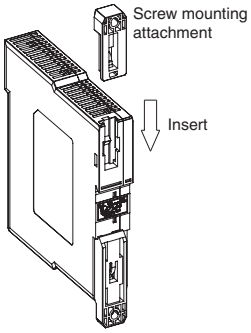

Wiring

Use the following to wire to G9SE.
- Solid wire: AWG24 to AWG16 (0.25 to 1.5 mm^2)
- Stranded wire: AWG24 to AWG16 (0.25 to 1.5 mm^2)
- Strip the cover of wire no longer than 8 to 10 mm

When using stranded wire, insulated ferrule should be used. Use below insulated ferrule.
When using ferrule, G9SE is suitable for Factory Wiring Only. When using G9SE as a "UL Listed" product for Field Wiring, do not use ferrule but insert the strand or solid wire (CU only) directly into the holes on the terminal block.
- Insulated ferrule: AWG24 to AWG16 (0.25 to 1.5 mm^2)
- Crimp height(H): 2.0 mm max
  Width(W): 2.7 mm max.
  Conductor length: 8 to 10 mm

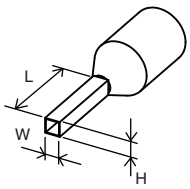

■ **Recommended insulated ferrule: manufactured by Phoenix contact**

Type		Wire size	
		Cross section (mm^2)	AWG
Single	AI 0,34-8TQ	0,34	22
	AI 0,5-10WH	0,5	20
	AI 0,75-10GY	0,75	18
	AI 1-10RD	1,0	18
	AI 1.5-10BK	1,5	16
Twin	AI TWIN2x0.75-10GY	2 x 0.75	–

How to insert solid wire and insulated ferrule

The wire should be pushed into the terminal block straight. No need to use the driver.
After inserting, make sure wire is fastened on to terminal block.

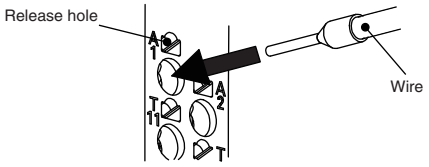

How to release wire

Use the following minus drive to release wire from terminal block.
And When releasing wire, the power source should be disconnected
1. Push the driver lightly into the taper of release hole.
2. Pull out the wire while the driver is pushed into release hole.
3. Pull out the driver.

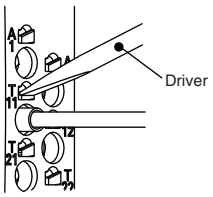

Recommended driver:
Type SZF0-0.4mmx2.5mm
manufactured by Phoenix contact
Type XW4Z-00B manufactured by Omron

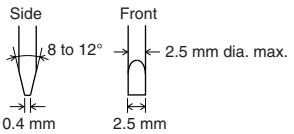

Precautions for Correct wiring

Terminal block may be damaged.
1. Not push the driver into the release hole straight.
2. Not push the driver into the release hole by force of 30N and over.
3. Not tip or twist the driver pushed into release hole.

Standards

Certified Standards

EN ISO13849-1: 2015 PL e Safety Category 4,
IEC/EN 60947-5-1, IEC/EN 62061 SIL3,
EN 81-1, EN81-2, EN 81-20, EN 81-50
UL508, CAN/CSA C22.2 No.14
GB 14048.5

Safety category

In the conditions shown in '5.Examples of Application' , G9SE can be used for the corresponding safety categories up to 4 and performance level(PL) up to e per ISO13849-1.
This does NOT mean that G9SE can always be used for the required category under all the similar conditions and situations.
Conformity to the categories must be assessed as a whole system.When using G9SE for the safety categories, make sure the conformity of the whole system.

Performance level and safety category (EN ISO13849-1)

(1) Input the signals to both of the Safety inputs (T12 and T22)
(2) Input a signal to the Safety inputs (T11-T12 and T21-T22) through switches with Direct Opening Mechanism. When using limit switches, at least one of them must have Direct Opening Mechanism.
And wiring must be done in a way that a short circuit between the wires of Safety input can be prevented.
(3) When connecting Safety sensor with G9SE, use TYPE 4 safety sensor.
(4) Be sure to connect the negative terminal of DC power supply to ground.
(5) Use two Safety outputs (e.g. 13-14 and 23-24) to construct the system.
(6) In order to ensure suffcient failure detection, it is mandatory to use G9SE only together with contactors or relays with forcibly guided contacts.
(7) Input the signal through NC contacts of the contactors to Feedback/Reset input (T31-T32 for manual reset or T31-T33 for auto reset). (Refer to 'Application Examples')

Terms and Conditions Agreement

Read and understand this catalog.

Please read and understand this catalog before purchasing the products. Please consult your OMRON representative if you have any questions or comments.

Warranties.

(a) Exclusive Warranty. Omron's exclusive warranty is that the Products will be free from defects in materials and workmanship for a period of twelve months from the date of sale by Omron (or such other period expressed in writing by Omron). Omron disclaims all other warranties, express or implied.

(b) Limitations. OMRON MAKES NO WARRANTY OR REPRESENTATION, EXPRESS OR IMPLIED, ABOUT NON-INFRINGEMENT, MERCHANTABILITY OR FITNESS FOR A PARTICULAR PURPOSE OF THE PRODUCTS. BUYER ACKNOWLEDGES THAT IT ALONE HAS DETERMINED THAT THE PRODUCTS WILL SUITABLY MEET THE REQUIREMENTS OF THEIR INTENDED USE.

Omron further disclaims all warranties and responsibility of any type for claims or expenses based on infringement by the Products or otherwise of any intellectual property right. (c) Buyer Remedy. Omron's sole obligation hereunder shall be, at Omron's election, to (i) replace (in the form originally shipped with Buyer responsible for labor charges for removal or replacement thereof) the non-complying Product, (ii) repair the non-complying Product, or (iii) repay or credit Buyer an amount equal to the purchase price of the non-complying Product; provided that in no event shall Omron be responsible for warranty, repair, indemnity or any other claims or expenses regarding the Products unless Omron's analysis confirms that the Products were properly handled, stored, installed and maintained and not subject to contamination, abuse, misuse or inappropriate modification. Return of any Products by Buyer must be approved in writing by Omron before shipment. Omron Companies shall not be liable for the suitability or unsuitability or the results from the use of Products in combination with any electrical or electronic components, circuits, system assemblies or any other materials or substances or environments. Any advice, recommendations or information given orally or in writing, are not to be construed as an amendment or addition to the above warranty.

See http://www.omron.com/global/ or contact your Omron representative for published information.

Limitation on Liability; Etc.

OMRON COMPANIES SHALL NOT BE LIABLE FOR SPECIAL, INDIRECT, INCIDENTAL, OR CONSEQUENTIAL DAMAGES, LOSS OF PROFITS OR PRODUCTION OR COMMERCIAL LOSS IN ANY WAY CONNECTED WITH THE PRODUCTS, WHETHER SUCH CLAIM IS BASED IN CONTRACT, WARRANTY, NEGLIGENCE OR STRICT LIABILITY.

Further, in no event shall liability of Omron Companies exceed the individual price of the Product on which liability is asserted.

Suitability of Use.

Omron Companies shall not be responsible for conformity with any standards, codes or regulations which apply to the combination of the Product in the Buyer's application or use of the Product. At Buyer's request, Omron will provide applicable third party certification documents identifying ratings and limitations of use which apply to the Product. This information by itself is not sufficient for a complete determination of the suitability of the Product in combination with the end product, machine, system, or other application or use. Buyer shall be solely responsible for determining appropriateness of the particular Product with respect to Buyer's application, product or system. Buyer shall take application responsibility in all cases.

NEVER USE THE PRODUCT FOR AN APPLICATION INVOLVING SERIOUS RISK TO LIFE OR PROPERTY OR IN LARGE QUANTITIES WITHOUT ENSURING THAT THE SYSTEM AS A WHOLE HAS BEEN DESIGNED TO ADDRESS THE RISKS, AND THAT THE OMRON PRODUCT(S) IS PROPERLY RATED AND INSTALLED FOR THE INTENDED USE WITHIN THE OVERALL EQUIPMENT OR SYSTEM.

Programmable Products.

Omron Companies shall not be responsible for the user's programming of a programmable Product, or any consequence thereof.

Performance Data.

Data presented in Omron Company websites, catalogs and other materials is provided as a guide for the user in determining suitability and does not constitute a warranty. It may represent the result of Omron's test conditions, and the user must correlate it to actual application requirements. Actual performance is subject to the Omron's Warranty and Limitations of Liability.

Change in Specifications.

Product specifications and accessories may be changed at any time based on improvements and other reasons. It is our practice to change part numbers when published ratings or features are changed, or when significant construction changes are made. However, some specifications of the Product may be changed without any notice. When in doubt, special part numbers may be assigned to fix or establish key specifications for your application. Please consult with your Omron's representative at any time to confirm actual specifications of purchased Product.

Errors and Omissions.

Information presented by Omron Companies has been checked and is believed to be accurate; however, no responsibility is assumed for clerical, typographical or proofreading errors or omissions.

Note: Do not use this document to operate the Unit.

OMRON Corporation **Industrial Automation Company**
Tokyo, JAPAN
Contact: www.ia.omron.com

Regional Headquarters
OMRON EUROPE B.V.
Wegalaan 67-69, 2132 JD Hoofddorp
The Netherlands
Tel: (31)2356-81-300/Fax: (31)2356-81-388

OMRON SCIENTIFIC TECHNOLOGIES INC.
6550 Dumbarton Circle Fremont
CA 94555 U.S.A
Tel: (1) 510-608-3400/Fax: (1) 510-744-1442

OMRON ASIA PACIFIC PTE. LTD.
No. 438A Alexandra Road # 05-05/08 (Lobby 2),
Alexandra Technopark,
Singapore 119967
Tel: (65) 6835-3011/Fax: (65) 6835-2711

OMRON (CHINA) CO., LTD.
Room 2211, Bank of China Tower,
200 Yin Cheng Zhong Road,
PuDong New Area, Shanghai, 200120, China
Tel: (86) 21-5037-2222/Fax: (86) 21-5037-2200

Authorized Distributor:

© OMRON Corporation 2015 All Rights Reserved.
In the interest of product improvement,
specifications are subject to change without notice.

CSM_3_2_0617
Cat. No. J198-E1-02 0215 (0115)