Datenblatt - Fiche technique - Data sheet

11.02.8314

ROLINE GOLD USB 2.0 OTG Kabel, A + Micro B - Micro B, ST/ST, 1,0 m

ROLINE GOLD Câble USB 2.0, OTG, A + Micro B - Micro B, M/M, 1,0 m

ROLINE GOLD USB 2.0 OTG Cable, A + Micro B - Micro B, M/M, 1.0 m

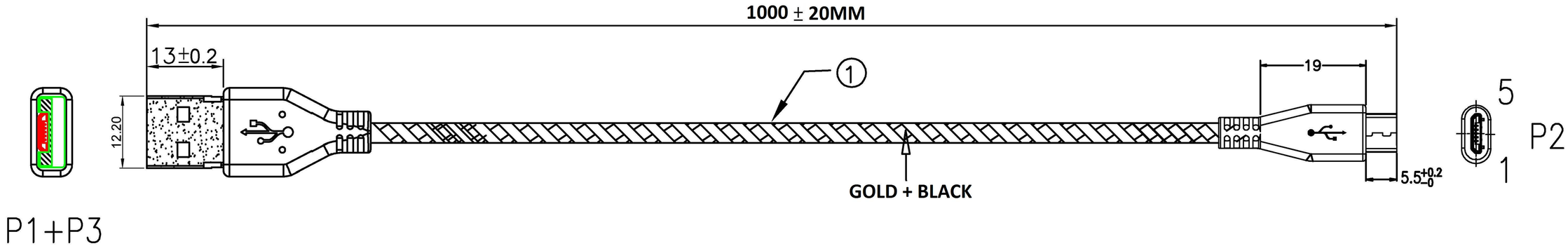

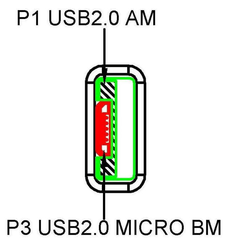

PINOUT:

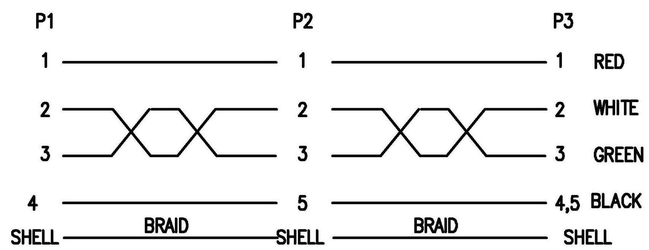

OUTER JACKET	OUTER JACKET PVC 45Pa BLACK (FIREPROOF MATERIAL) RoHS	0.015	kg
MICRO USB B/M	MICRO USB B/M BLACK TERMINAL GOLD PLATED 1u" RoHS	1	pc
A/M+MICRO B/M	USB 2.0 OTG A/M+MICRO BM WHITE SOLDER BENDING TYPE, TERMINAL GOLD PLATED 1u" NICKEL PLATED SHELL	1	pc
CABLE	USB 2.0 (32AWGx1P + 22AWGx1C+S) W/NYLON FIBER OD:3.2MM 1.0M RoHS	1	pc

SECOMP

DIMENSIONS ARE IN MILLIMETERS
ANGULAR TOLERANCE: ±1.0°

DIMENSIONS	TOLERANCE
0.00 TO 30.00mm	±0.10mm
30.01 TO 80.00mm	±0.13mm
80.01 TO 150.00mm	±0.15mm
150.01mm ↑	±0.20mm

MATERIAL *MATERIAL*
FINISH *FINISH*

TITLE ROLINE GOLD USB 2.0 OTG Cable, A+Micor B/Micro B, M/M, Black/Gold color, 1m

PART NO. 11.02.8314

DR. LKX 2017/01/10

APPD.

CONF.

SCALE

SHEET 1 / 1

UNIT MM

SIZE A4

REV. A