The supplier acknowledges that, with the acceptance of the drawing, he is in a position to manufacture the illustrated part in accordance with the drawing in reproducible from and series production. Through the selected manufacturing processes no impairments will arise in the material and structure which could subsequently lead to an impairment of the component. Verbal agreements over and above that are not valid. Deviations from this rule must be written and must be signed by the purchaser.

This drawing may not be copied, reproduced or made available to third parties in any manner without our prior written approval.

Technische Daten/ technical data	:	Akkupack/ batterypack
Chemie/ chemistry	:	Lithium Ion
Zellenzahl/ no. of cells	:	2 Zellen/ cells; 2S1P
Zellentypl/ cell type	:	INR18650 LGC MJ1
Kapazität/ capacity	:	nom. 3450mAh discharge at 0.2C min. 3400mAh discharge at 0.2C ta:20°C; EV(Discharge End Voltage): 2.5V per cell
Innenwiderstand/ impedance	:	< 140mOhm (battery and safetyboard)
Nominalspannung/ nominal voltage	:	7.4V
Standard Ladespannung/ standard charge voltage	:	8.4V±1%
Standard Entladespannung/ standard discharge voltage	:	5.0V
Nominaler Ladestrom/ nominal charge current	:	0.5C
Maximaler Ladestrom/ maximum charge current	:	1C
Ladeendstrom/ charge end current	:	0.01C recommended
Maximaler Entladestrom/ maximum discharge current	:	5000mA (limited by safetyboard)
Anwendungstemperaturbereich/ ambient temperature range	:	0°C...+45°C charge −20°C...+60°C discharge −20°C...+30°C storage max. 1 year −20°C...+45°C storage max. 3months
Selbstentladung/ self discharge	:	≤ 5% / month at 20°C ≤ 10% / month at 30°C ≤ 20% / month at 40°C
Standards/	:	UN 3480, Subsection 38.3 All cells and batterypacks type tested according to UN manual of test and criteria subsection 38.3

Technische Daten/ technical data	:	Sicherheitsschaltung/ safety board (0180−3029)
Überladeschutzspannung/ over charge voltage detection	:	4.3V±25mV per cell
Wiedereinschaltspannung/ over charge release voltage	:	4.1V±50mV per cell
Entladeabschaltspannung/ over discharge detection voltage	:	2.4V±50mV per cell
Wiedereinschaltspannung/ over discharge release voltage	:	3.0V±100mV per cell
Nominaler Lade/Entladestrom/ nominal operating current	:	5A
Entlade Abschaltstrom/ discharge cut off current	:	13A± 3A
Kurzschlussschutz/ short circuit protection	:	gegen äußeren Kurzschluss/ against external short circuit
Temperarurschalter/ temperature switch	:	PTC : JK−P730 20V/7.3A at 25°C; 6.2A at 40°C
MOSFET	:	in Masse in Gnd
Rückstellkriterium/ release condition	:	Last trennen, Aktiv nach Anladen/ cut load, release after charging up
Leiterplattenmaterial/ pcb material	:	FR4
Nettogewicht/ net weight	:	ca./ approx. 101g
Standards	:	CE

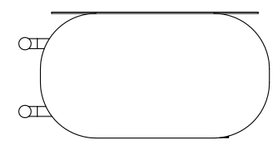

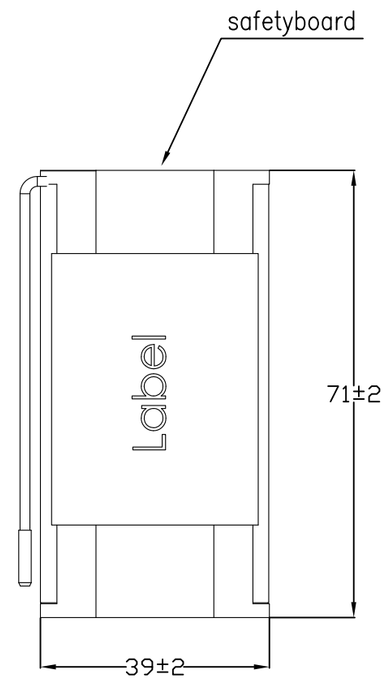

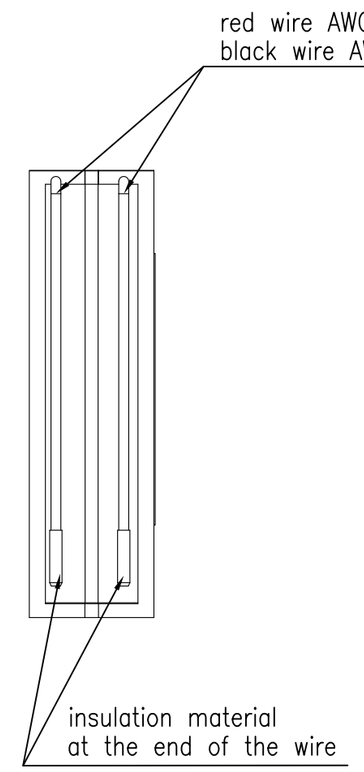

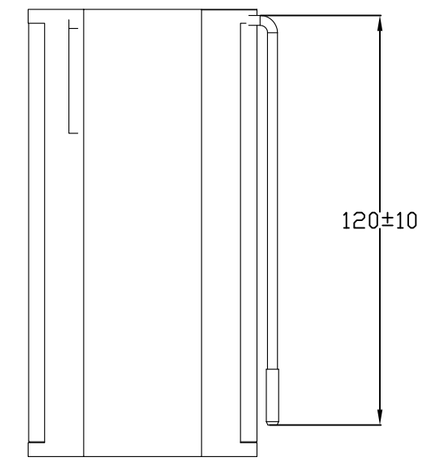

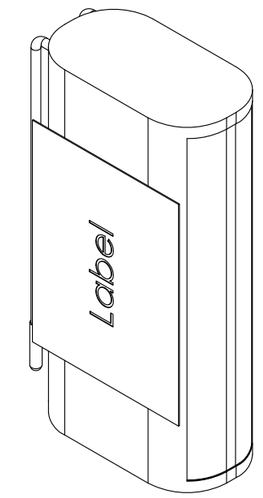

Batterypack covered with 2 layers of blue shrinktube

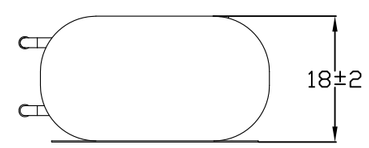

Verwendungsbereich/Application range für Anfrage/for inquiry AN-IS-2016-01263				Zul. Abweichung/ Allowable deviation Allgemeintoleranz DIN ISO 2768-m	Oberfläche/ Surface	Maßstab/Scale (DIN A2): 1:1	Gewicht/Weight
						Werkstoff/Work material, Modell-Nr.	
				2016	Datum/Date	Name	Zeichnungsname/Drawing name
				Erstellt/ Drawn by	12.10.	JX	Li−Ion−7.4V−3450mAh−2s1p−PTC/LG with safetyboard
VO	created this D/S	12.10.16	JX	ANSMANN		Zeichnungsnummer/Drawing number Artikelnummer/Part number 2447−3030−20	Blatt/ Sheet 1
Version	Änderung/Change	Datum/Date	Name	Ursprung/Origin Proj. IS-2016-01263		Ersatz für/Replaced by	Ersatz durch/Replacement through: