Product data sheet
Characteristics

XS218SAPAM12
inductive sensor XS2 M18 - L70mm - stainless - Sn12mm - 12..24VDC - M12

Main

Range of product	OsiSense XS
Series name	Application
Sensor type	Inductive proximity sensor
Device application	Food and beverage
Market segment	Pharmaceutical
Sensor name	XS2
Sensor design	Cylindrical M18
Size	70 mm
Body type	Fixed
Detector flush mounting acceptance	Non flush mountable
Material	Stainless steel
Type of output signal	Discrete
Wiring technique	3-wire
[Sn] nominal sensing distance	0.47 in (12 mm)
Discrete output function	1 NO
Output circuit type	DC
Discrete output type	PNP
Electrical connection	Male connector M12, 4 pins
[Us] rated supply voltage	12...24 V DC reverse polarity protection
Switching capacity in mA	<= 200 mA overload and short-circuit protection
IP degree of protection	IP67 IEC 60529 IP69K DIN 40050

Complementary

Thread type	M18 x 1
Detection face	Frontal
Front material	PPS
Enclosure material	Stainless steel 316 L
Sensing range	> 0.31...0.59 in (> 8...15 mm)
Operating zone	0.00…0.38 in (0…9.6 mm)
Differential travel	1...15% of Sr
Status LED	Output state 1 LED yellow)
Supply voltage limits	10…36 V DC
Switching frequency	<= 1000 Hz
Maximum voltage drop	<2 V closed)
Current consumption	<= 10 mA no-load
Maximum delay first up	10 ms
Maximum delay response	0.3 ms
Maximum delay recovery	0.7 ms
Marking	CE
Threaded length	1.65 in (42 mm)
Length	2.76 in (70 mm)

The information provided in this documentation contains general descriptions and/or technical characteristics of the performance of the products contained herein.
This documentation is not intended as a substitute for and is not to be used for determining suitability or reliability of these products for specific user applications.
It is the duty of any such user or integrator to perform the appropriate and complete risk analysis, evaluation and testing of the products with respect to the relevant specific application or use thereof.
Neither Schneider Electric Industries SAS nor any of its affiliates or subsidiaries shall be responsible or liable for misuse of the information contained herein.

Environment

Product certifications	UL CSA
Ambient air temperature for operation	-13…185 °F (-25…85 °C)
Ambient air temperature for storage	-40…185 °F (-40…85 °C)
Vibration resistance	25 gn +/- 2 mm 10…55 Hz)IEC 60068-2-6
Shock resistance	50 gn 11 ms IEC 60068-2-27

Ordering and shipping details

Category	22486 - SENSORS, PROXIMITY
Discount Schedule	DS2
GTIN	00785901798934
Nbr. of units in pkg.	1
Package weight(Lbs)	0.15 lb(US) (0.07 kg)
Returnability	Yes
Country of origin	FR

Packing Units

Unit Type of Package 1	PCE
Package 1 Height	1.65 in (4.2 cm)
Package 1 width	2.56 in (6.5 cm)
Package 1 Length	3.74 in (9.5 cm)
Unit Type of Package 2	BAG
Number of Units in Package 2	1
Package 2 Weight	2.47 oz (70 g)
Package 2 Height	0.79 in (2 cm)
Package 2 width	7.87 in (20 cm)
Package 2 Length	5.91 in (15 cm)
Unit Type of Package 3	S01
Number of Units in Package 3	22
Package 3 Weight	3.73 lb(US) (1.694 kg)
Package 3 Height	5.91 in (15 cm)
Package 3 width	5.91 in (15 cm)
Package 3 Length	15.75 in (40 cm)

Offer Sustainability

Sustainable offer status	Green Premium product
California proposition 65	WARNING: This product can expose you to chemicals including: Diisononyl phthalate (DINP), which is known to the State of California to cause cancer, and Di-isodecyl phthalate (DIDP), which is known to the State of California to cause birth defects or other reproductive harm. For more information go to www.P65Warnings.ca.gov
REACh Regulation	REACh Declaration
EU RoHS Directive	Pro-active compliance (Product out of EU RoHS legal scope) EU RoHS Declaration
Mercury free	Yes
RoHS exemption information	Yes
Environmental Disclosure	Product Environmental Profile
Circularity Profile	End Of Life Information

Contractual warranty

Warranty	18 months

XS218SAPAM12

Dimensions

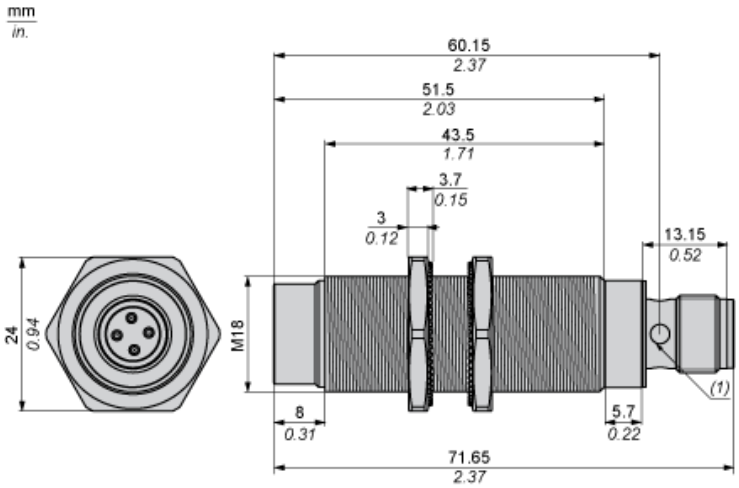

(1) LED

Minimum Mounting Distances

Side by side

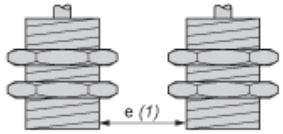

e (1) 72 mm/2.83 in.
≥

Face to face

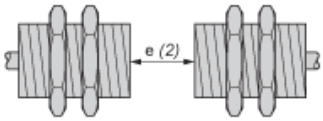

e (2) 144 mm/5.67 in.
≥

Facing a metal object

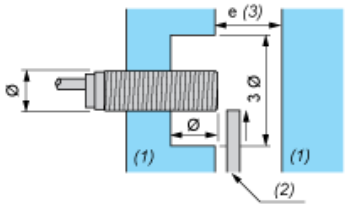

e (3) 36 mm/1.42 in
≥
(1) Metal
(2) Object to be detected

Wiring Schemes

M12 connector
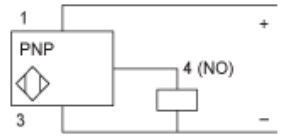
PNP