CAD GENERATED DRAWING - NO PENCIL CHANGES ALLOWED

PART NUMBER	DESCRIPTION	UPC CODE	MARKING	
			FRONT	BACK
01500322H	ACS 3AG INLINE FUSE HOLDER	079458 10590	150322	500V 15A MAX UR
01500332H	ACS 3AG INLINE FUSE HOLDER	079458 94730	150332	250V 15A UR PA-VO

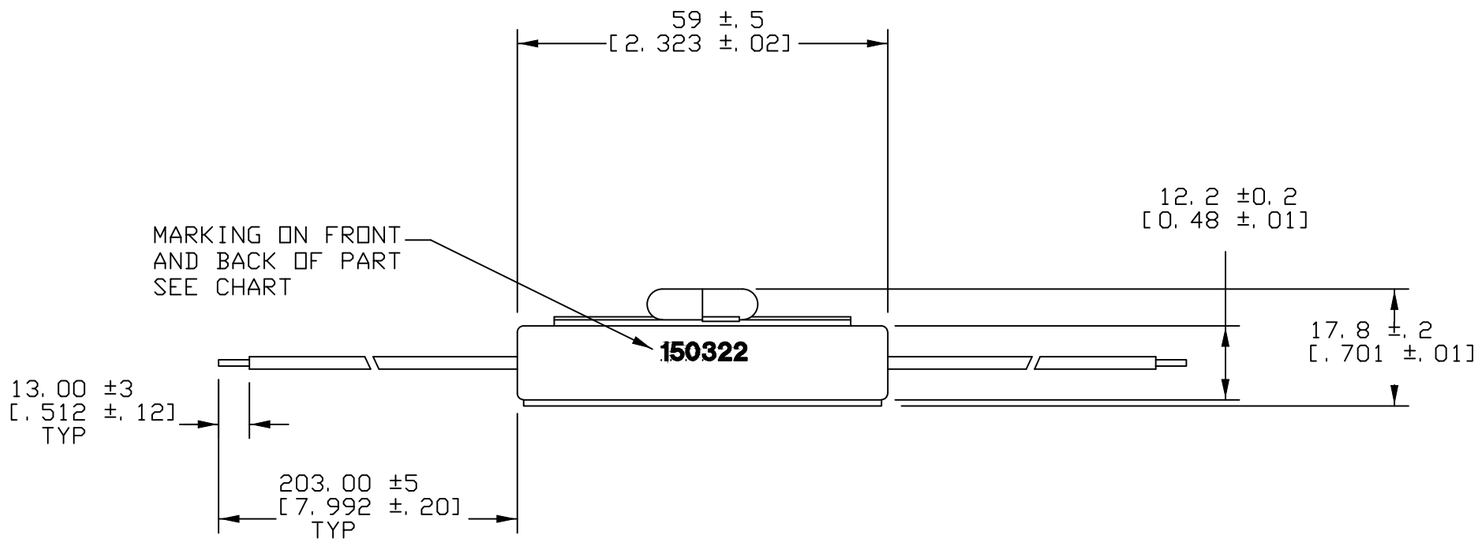

NOTES:

1. WIRE IS AWG18, RATED @150°C, COLOR: BLACK
2. INTERNAL TERMINALS ARE BRASS, Sn PLATED

PACKAGING NOTES:

SUPPLIER TO PACKAGE 100 PCS PER BOX
AND LABEL WITH A LABEL PRINTED WITH:
*LITTELFUSE PART NUMBER
*DESCRIPTION
UL RECOGNIZED LOGO
*QUANTITY
*DATE CODE
*COUNTRY OF ORIGIN
*UPC CODE

APPROVED HOUSING MATERIALS:
PREFERRED: DUPONT FR7025VOF

ND	COMPONENT ND	DESCRIPTION	QTY/M	U/M

BILL OF MATERIAL

MATL SPEC | FINISH

COPIES TO: 1 9 18, 2 10 19, 3 12 20, 4 13 21, 5 14 23, 6 15 33, 7 16 43, 8 17 53

		DATE	SCALE	FULL
DRW	MQR	03/11/11	SUPER DRW	
CHK	C. HERBIAS	03/11/11	FINISH GOOD WT	GRAMS/PIECE
APPD	C. HERBIAS	03/11/11		

TOLERANCE UNLESS OTHERWISE SPECIFIED
TWO PLACE DEC ±.25[.01] FRACTION ±
THREE PLACE DEC ±.100[.004] ANGULAR ±1°

TITLE: IN-LINE FUSE HOLDER

3RD ANGLE PROJECTION

Littelfuse®
DES PLAINES, ILLINOIS 60016

REVISION: A

DRWG. NO. 01500322H THRU 01500332H

OUTLINE

LTR	REVISION	CHK	APD
A	501802ERE - RELEASED 03/11/11 MQR		

UNLESS OTHERWISE SPECIFIED, DIMENSIONS ARE IN MILLIMETERS. DIMENSIONS IN BRACKETS [ ] ARE INCHES

UNLESS OTHERWISE SPECIFIED, DIMENSIONS DO NOT INCLUDE PLATING.

● DENOTES CRITICAL CHARACTERISTICS.

CPK DENOTES CPK DIMENSIONS,-MINIMUM CPK VALUE

ST DENOTES A CHARACTERISTIC THAT PROVIDES AN INDICATION OF PROCESS PERFORMANCE. PROCEDURE FOR MEASUREMENT AND TRACKING TO BE DEFINED IN LITTELFUSE INSPECTION INSTRUCTIONS.

CP DENOTES CP DIMENSIONS,-MINIMUM CP VALUE MUST BE WITHIN THE DIMENSIONAL LIMITATIONS SHOWN ON DRAWING AND INITIALLY LOCATED TO ALLOW FOR MAXIMUM TOOL LIFE.