200mW
30V Schottky Barrier Diode

multicomp PRO

RoHS Compliant

Features:

- Low forward voltage
- Fast switching speed
- Surface device type mounting.
- Moisture sensitivity level 1
- Matte Tin (Sn) lead finish with Nickel (Ni) underplate

Maximum Ratings and Electrical Characteristics

Rating at 25°C Ambient Temperature Unless Otherwise Specified.

Characteristic	Symbol	Rating	Units
Continuous Reverse Voltage	V_R	30	V
Forward Continuous Current	I_F	200	mA
Non-Repetitive Peak Forward Current t<1s	I_{FSM}	0.6	A
Total Power Dissipation @ T_A = 25°C	P_D	200	mW
Storage Temperature Range	T_{stg}	-55 to +150	°C
Operating Junction Temperature Range	T_J	-55 to +150	°C
Soldering Temperature During 10s	T_J	260	°C

Characteristic		Symbol	Max.	Units
Forward Voltage (2)	I_F = 0.1mA I_F = 1mA I_F = 10mA I_F = 30mA I_F = 100mA	V_F	240 320 400 500 1000	mV
Reverse Current (V_R = 25V) Capacitance (Measured at 1MHz, V_R = 1V)		I_R C_J	2 10	µA pF
Reverse Recovery Time (I_F = I_R = 10mA; $I_{(REC)}$ = 1mA)		trr	5	nS

Connection Diagram

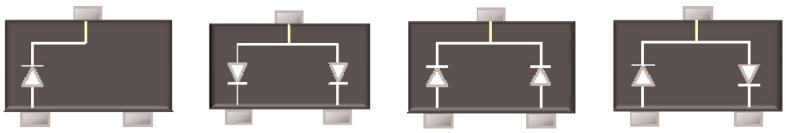

BAT54+ BAT54A+ BAT54C+ BAT54S+

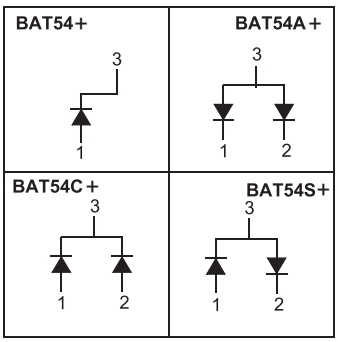

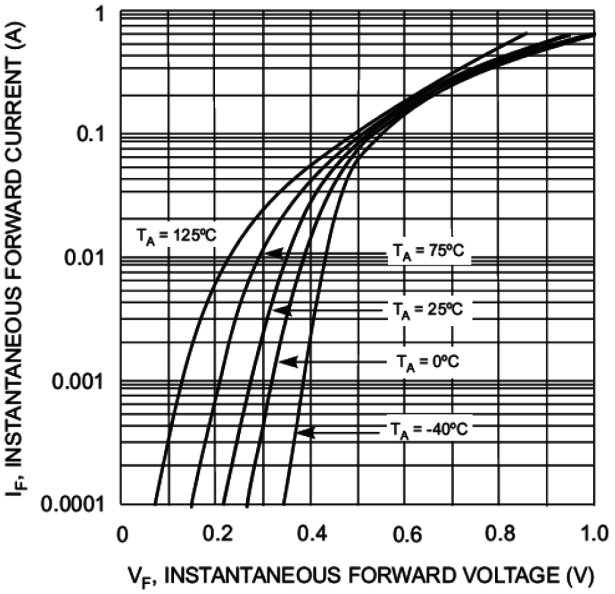

Fig. 1 Forward Characteristics

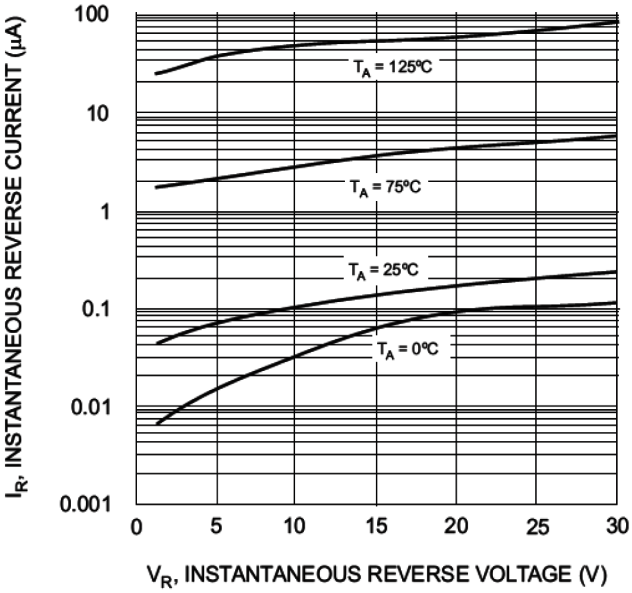

Fig. 2 Typical Reverse Characteristics

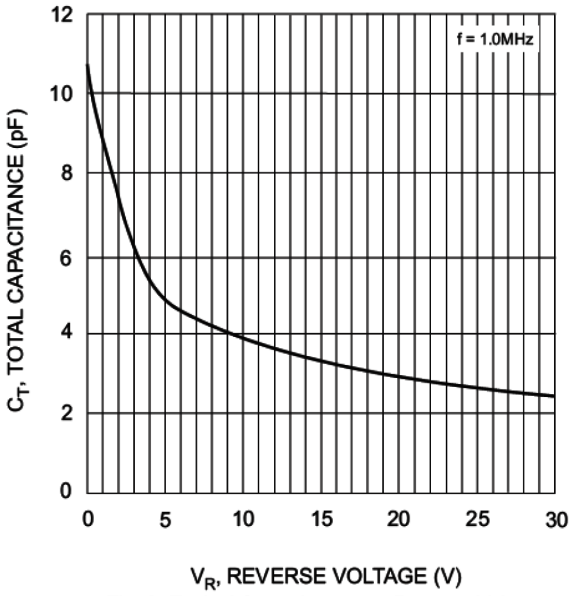

Fig. 3 Typical Capacitance vs. Reverse Voltage

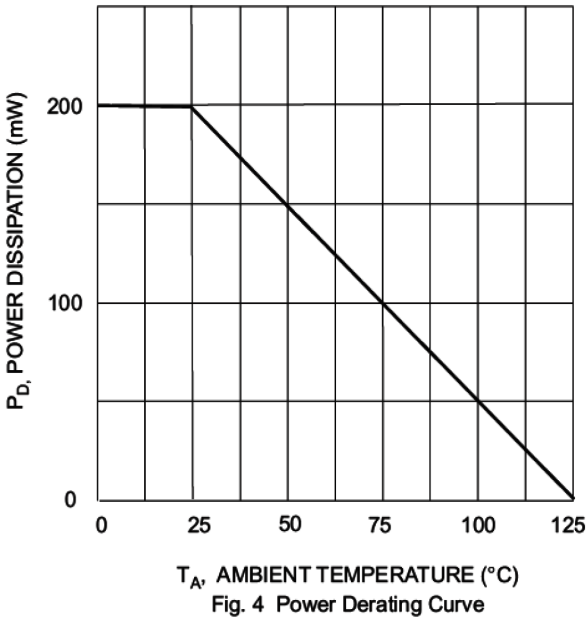

Fig. 4 Power Derating Curve

200mW
30V Schottky Barrier Diode

multicomp PRO

Dimension:

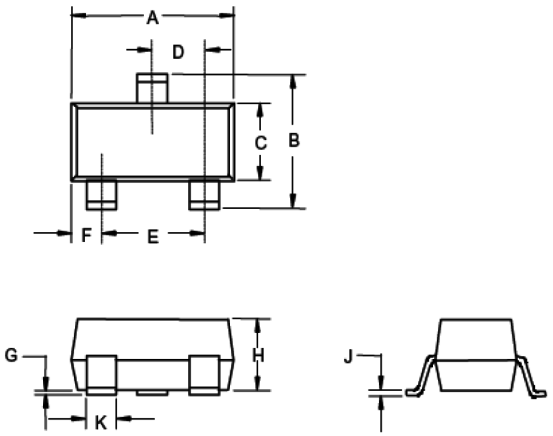

SOT-23		
Dim.	**Min.**	**Max.**
A	2.8	3.04
B	2.1	2.64
C	1.2	1.4
D	0.89	1.03
E	1.78	2.05
F	0.45	0.6
G	0.013	0.1
H	0.89	1.12
J	0.085	0.18
K	0.37	0.51

Dimensions : Millimetres

Part Number Table

Description	Marking	Type	Part Number
200mW, 30V Schottky Barrier Diode, SOT-23	KL1 (L4)	Single	BAT54+
	KL2 (L42)	Dual	BAT54A+
	KL3 (L42)		BAT54C+
	KL4 (L42)		BAT54S+

Important Notice : This data sheet and its contents (the "Information") belong to the members of the AVNET group of companies (the "Group") or are licensed to it. No licence is granted for the use of it other than for information purposes in connection with the products to which it relates. No licence of any intellectual property rights is granted. The Information is subject to change without notice and replaces all data sheets previously supplied. The Information supplied is believed to be accurate but the Group assumes no responsibility for its accuracy or completeness, any error in or omission from it or for any use made of it. Users of this data sheet should check for themselves the Information and the suitability of the products for their purpose and not make any assumptions based on information included or omitted. Liability for loss or damage resulting from any reliance on the Information or use of it (including liability resulting from negligence or where the Group was aware of the possibility of such loss or damage arising) is excluded. This will not operate to limit or restrict the Group's liability for death or personal injury resulting from its negligence. Multicomp Pro is the registered trademark of Premier Farnell Limited 2019.